ACURA

INTEGRA

Service Manual 1994

INTRODUCTION

How to Use This Manual

This manual is divided into 23 sections. The first page of each section is marked with a black tab that lines up with its corresponding thumb index tab on this page and the back cover. You can quickly find the first page of each section without looking through a full table of contents. The symbols printed at the top corner of each page can also be used as a quick reference system.

Each section includes:

1. A table of contents, or an exploded view index showing:
   - Parts disassembly sequence.
   - Bolt torques and thread sizes.
   - Page references to descriptions in text.
2. Disassembly/assembly procedures and tools.
3. Inspection.
4. Testing/troubleshooting.
5. Repair.
6. Adjustments.

Special Information

⚠ WARNING Indicates a strong possibility of severe personal injury or loss of life if instructions are not followed.

CAUTION: Indicates a possibility of personal injury or equipment damage if instructions are not followed.

NOTE: Gives helpful information.

CAUTION: Detailed descriptions of *standard workshop* procedures, safety principles and service operations are not included. Please note that this manual contains warnings and cautions against some specific service methods which could cause PERSONAL INJURY, damage a vehicle or make it unsafe. Please understand that these warnings cannot cover all conceivable ways in which service, whether or not recommended by HONDA, might be done, or of the possible hazardous consequences of every conceivable way, nor could HONDA investigate all such ways. Anyone using service procedures or tools, whether or not recomended by HONDA, *must satisfy himself thoroughly* that neither personal safety nor vehicle safety will be jeopardized.

All information contained in this manual is based on the latest product information available at the time of printing. We reserve the right to make changes at any time without notice. No part of this publication may be reproduced, stored in retrieval system, or transmitted, in any form by any means, electronic, mechanical, photocopying, recording, or otherwise, without the prior written permission of the publisher. This includes test, figures and tables.

First Edition 7/93 1448 pages
HONDA MOTOR CO.,LTD.
Service Publication office
All Rights Reserved
Specifications Apply to U.S.A. and Canada

As sections with * include SRS components, special precautions are required when servicing.

*General Info
Special Tools
Specifications
Maintenance
Engine
Cooling
Fuel and Emissions
*Transaxle
*Steering
Suspension
*Brakes (Including ABS)
*Body
*Heater and Air Conditioner
*Electrical (Including SRS)

SUPPLEMENTAL RESTRAINT SYSTEM (SRS)

The Integra SRS includes a driver's airbag, located in the steering wheel hub. In addition, all models except the RS model for Canada have a front passenger's airbag located in the dashboard above the glove box. Information necessary to safely service the SRS is included in this Service Manual. Items marked with an asterisk (*) on the contents page include, or are located near, SRS components. Servicing, disassembling or replacing these items will require special precautions and tools, and should therefore be done by an authorized Acura dealer.

⚠ WARNING

- **To avoid rendering the SRS inoperative, which could lead to personal injury or death in the event of a severe frontal collision, all SRS service work must be performed by an authorized Acura dealer.**
- **Improper service procedures, including incorrect removal and installation of the SRS, could lead to personal injury caused by unintentional activation of the airbags.**
- **All SRS electrical wiring harnesses are covered with yellow insulation. Related components are located in the steering column, front console, dashboard, and dashboard lower panel, and in the dashboard above the glove box. Do not use electrical test equipment on these circuits.**

NOTE: The original radio has a coded theft protection circuit. Be sure to get the customer's code number before
— disconnecting the battery.
— removing the No. 32 (7.5 A) fuse from the under-hood fuse/relay box.
— removing the radio.
After service, reconnect power to the radio and turn it on. When the word "CODE" is displayed, enter the customer's 5-digit code to restore radio operation.

General Information

Chassis and Paint Codes 1-2
Identification Number Locations 1-4
Warning/Caution Label Locations 1-5
Lift and Support Points
  Lift 1-9
  Floor Jack 1-10
  Safety Stands 1-11
Towing 1-12

Chassis and Paint Codes
U.S.Model

Vehicle Identification Number

JH4DB754*RS000001

Manufacturer, Make and Type of Vehicle
- JH4: HONDA MOTOR CO., LTD. ACURA Passenger car

Line, Body and Engine Type
- DB7: INTEGRA 4-door/B18B1
- DB8: INTEGRA 4-door/B18C1
- DC2: INTEGRA 3-door/B18C1
- DC4: INTEGRA 3-door/B18B1

Body Type and Transmission Type
- 3: 2-door Hatchback 5-speed Manual
- 4: 2-door Hatchback 4-speed Automatic
- 5: 4-door Sedan 5-speed Manual
- 6: 4-door Sedan 4-speed Automatic

Vehicle Grade (Series)
- 4: RS
- 5: LS
- 8: GS-R

Check Digit

Model Year
- R: 1994

Factory Code
- S: Suzuka Factory in Japan

Serial Number

Engine Number

B18B1-1300001

Engine Type
- B18B1: 1.8 ℓ DOHC Sequential Multi-port Fuel-injected engine
- B18C1: 1.8 ℓ DOHC VTEC Sequential Multi-port Fuel-injected engine

Serial Number

Transmission Number

Y80-1000001

Transmission Type
- Y80: Manual
- MP7A: Automatic

Serial Number

Paint Code

COLOR
BG-33P

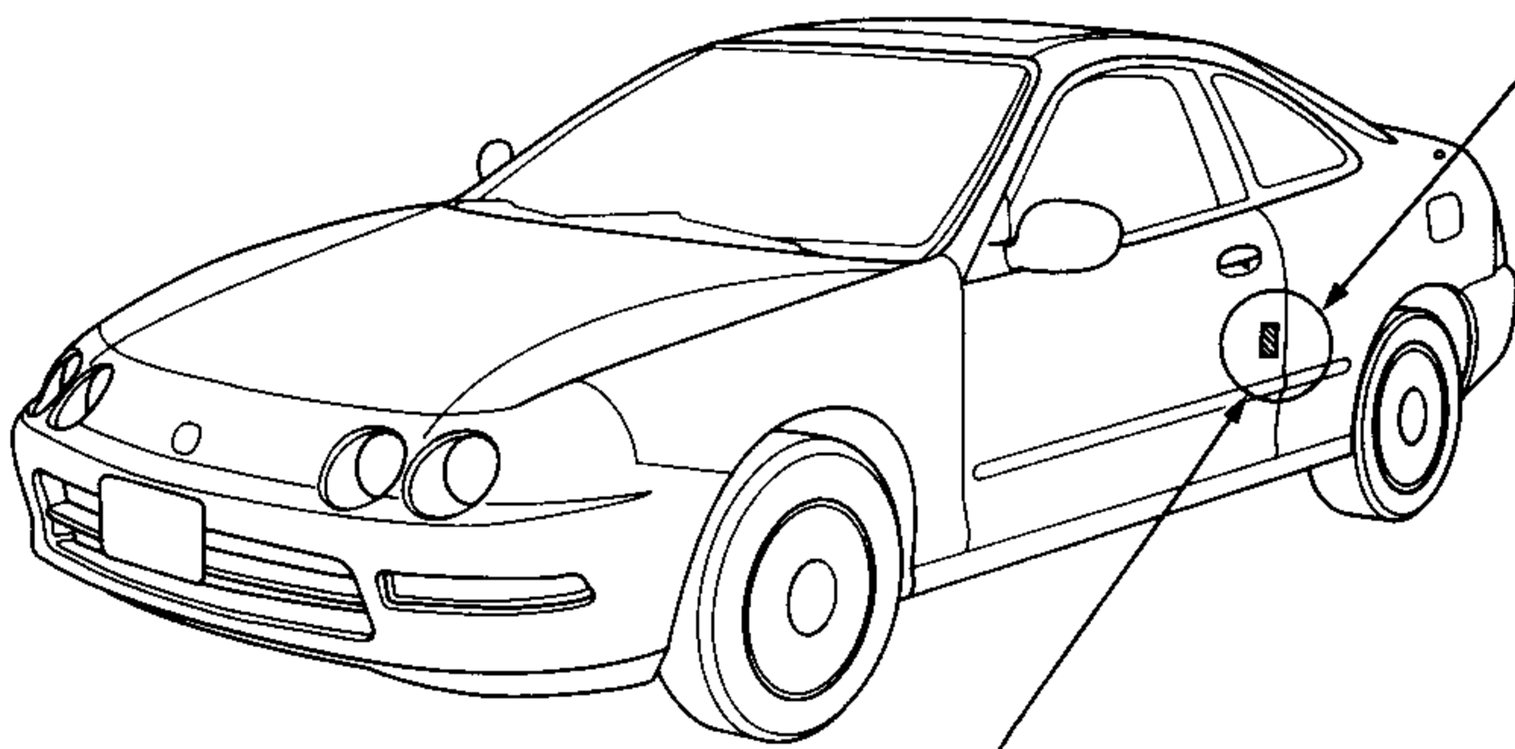

Vehicle Identification Number and Federal Motor Vehicle Safety Standard Certification

3DOOR

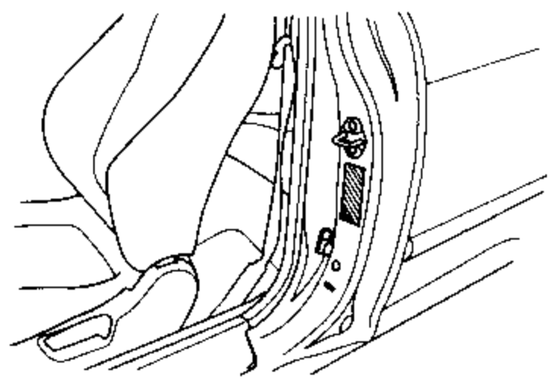

4DOOR

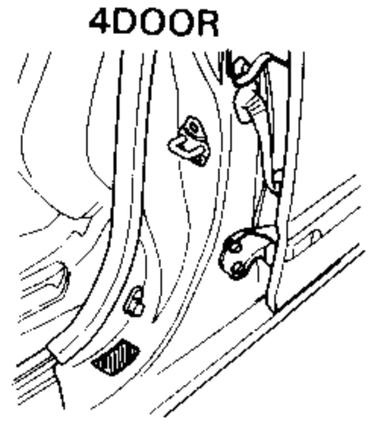

Paint Code

Paint Code	Color
BG-33P	Paradise Blue-green Pearl
G-71P	Lausanne Green Pearl
NH-503P	Granada Black Pearl
NH-538	Frost White
NH-575M	Thunder Gray Metallic
R-72P	Torino Red Pearl
R-81	Milano Red
RP-24P	Stealth Gray Pearl
YR-503M	Rosewood Brown Metallic

Canada Model

Vehicle Identification Number

JH4DB753*RS800001

Manufacturer, Make and Type of Vehicle
JH4: HONDA MOTOR CO., LTD. ACURA Passenger car

Line, Body and Engine Type
DB7: INTEGRA 4-door/B18B1
DC2: INTEGRA 3-door/B18C1
DC4: INTEGRA 3-door/B18B1

Body Type and Transmission Type
3: 2-door Hatchback 5-speed Manual
4: 2-door Hatchback 4-speed Automatic
5: 4-door Sedan 5-speed Manual
6: 4-door Sedan 4-speed Automatic

Vehicle Grade (Series)
3: RS without passenger SRS airbag
4: RS with passenger SRS airbag
5: LS
8: GS-R

Check Digit

Model Year
R: 1994

Factory Code
S: Suzuka Factory in Japan

Serial Number

Engine Number

B18B1-1700001

Engine Type
B18B1: 1.8 ℓ DOHC Sequential Multi-port Fuel-injected engine
B18C1: 1.8 ℓ DOHC VTEC Sequential Multi-port Fuel-injected engine

Serial Number

Transmission Number

Y80-1000001

Transmission Type
Y80: Manual
MP7A: Automatic

Serial Number

Paint Code

COLOR BG-33P

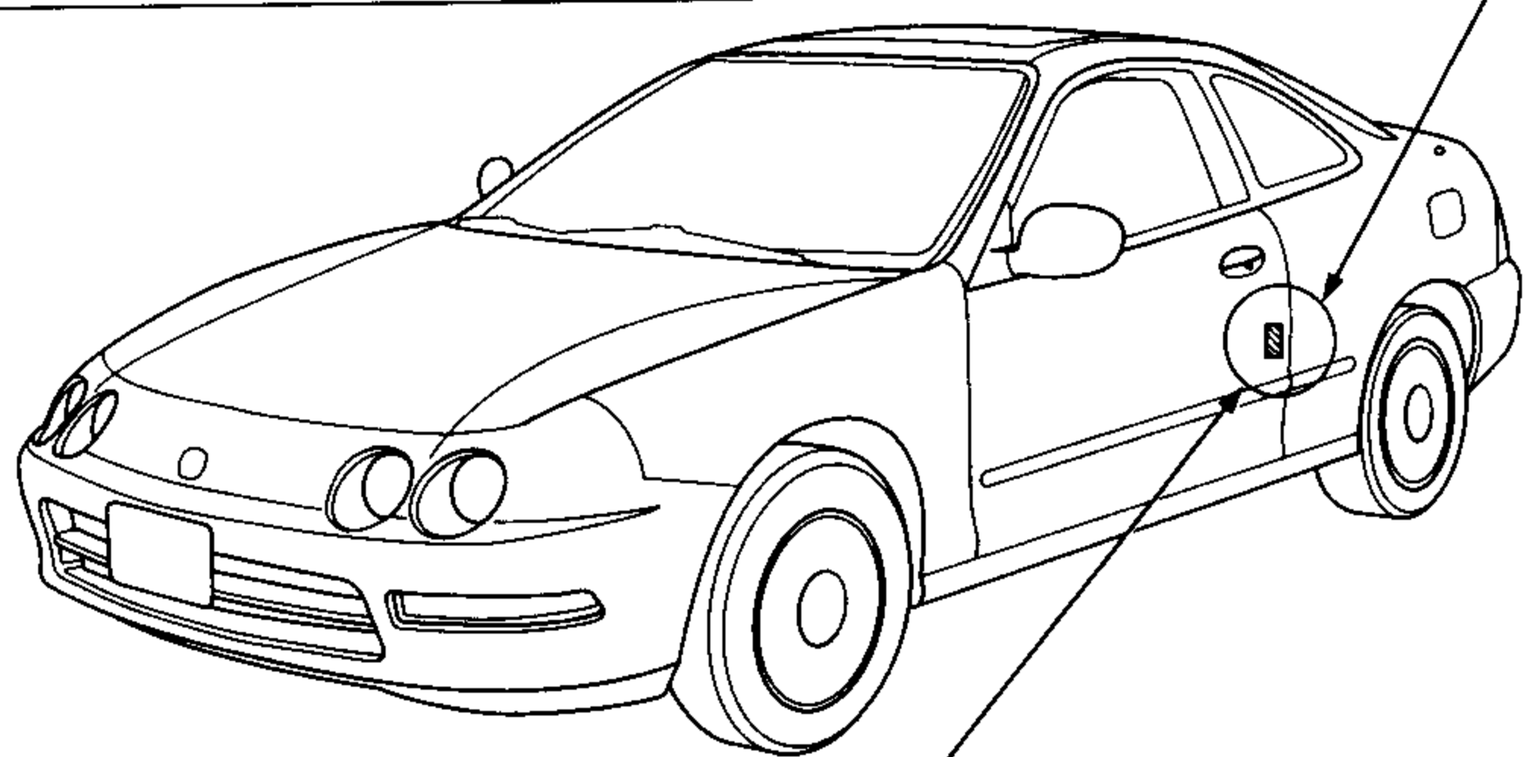

Vehicle Identification Number and Canadian Motor Vehicle Safety Standard Certification

3DOOR

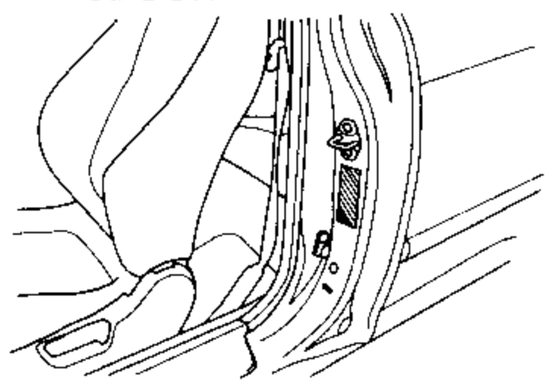

4DOOR

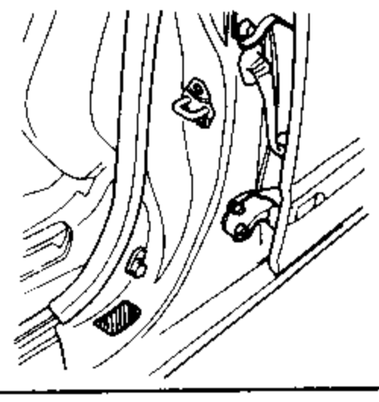

Paint Code

Paint Code	Color
BG-33P	Paradise Blue-green Pearl
G-71P	Lausanne Green Pearl
NH-503P	Granada Black Pearl
NH-538	Frost White
NH-575M	Thunder Gray Metallic
R-72P	Torino Red Pearl
R-81	Milano Red
RP-24P	Stealth Gray Pearl
YR-503M	Rosewood Brown Metallic

Identification Number Locations

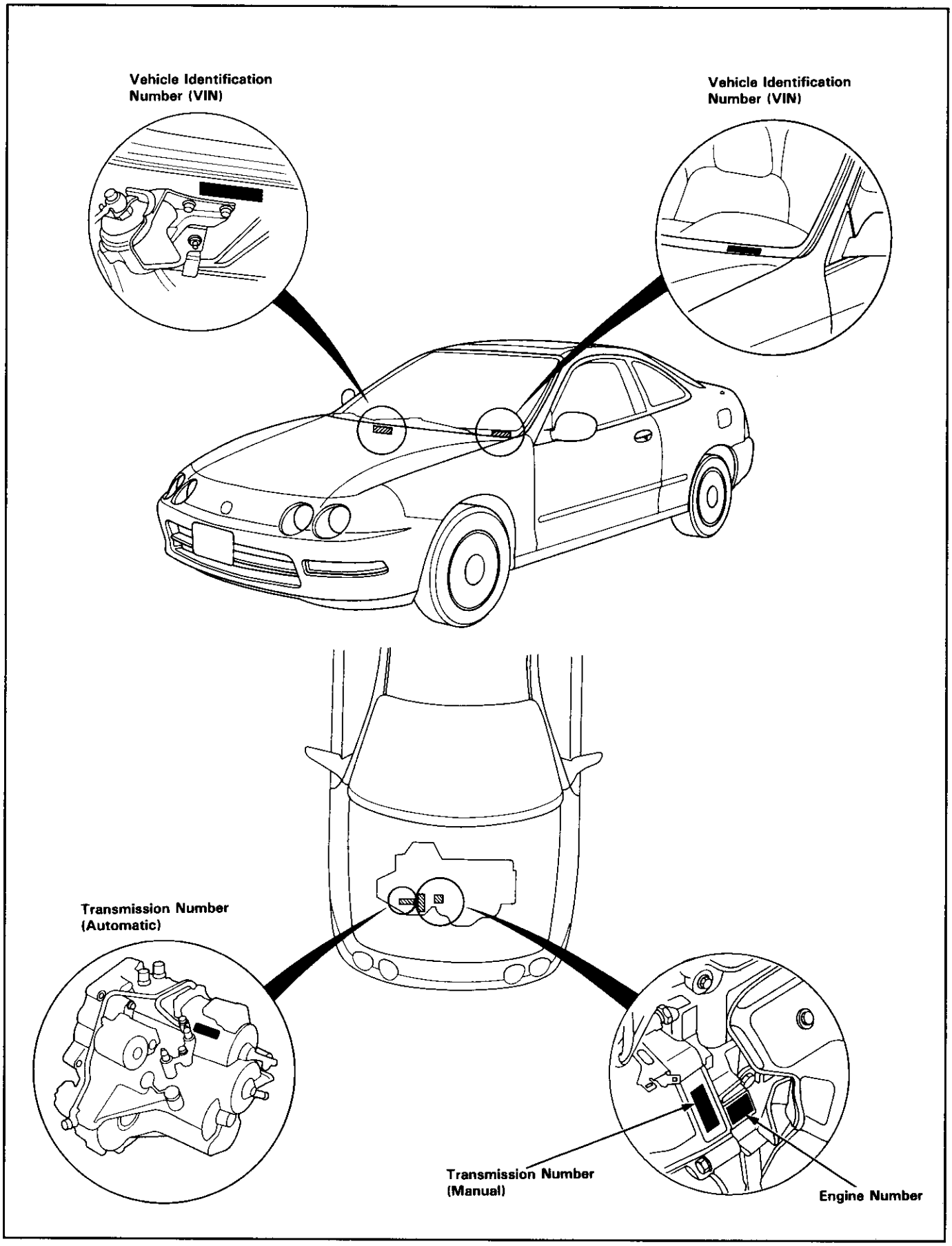

Warning/Caution Label Locations

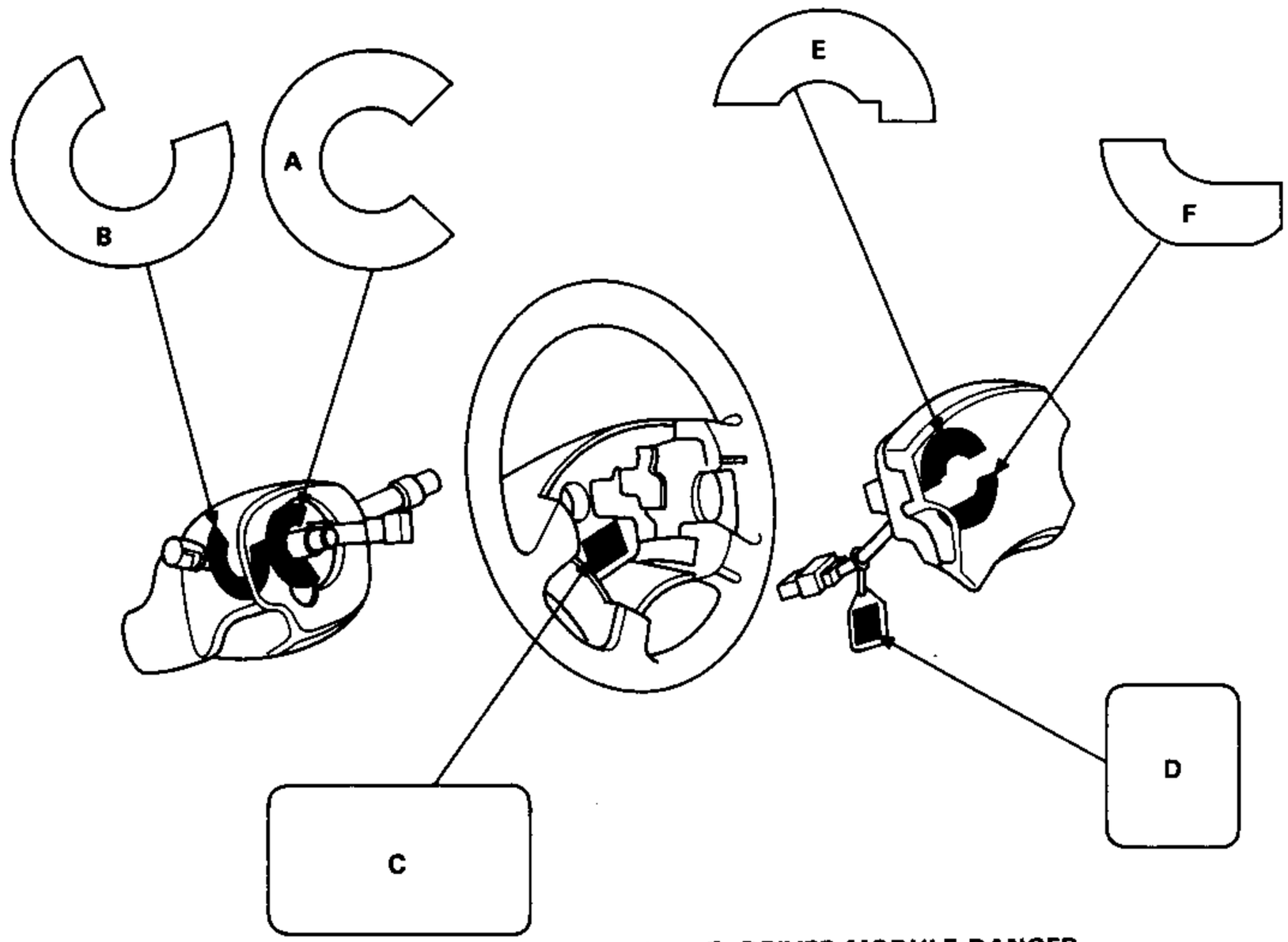

A: CABLE REAL CAUTION A

SRS
REFER TO SERVICE MANUAL FOR DETAILED INSTRUCTION

B: CABLE REAL CAUTION B

SRS
REFER TO SERVICE MANUAL FOR DETAILED INSTRUCTION

C: STEERING WHEEL NOTICE

NOTICE
IMPROPER STEERING WHEEL REMOVAL OR INSTALLATION DAMAGE SRS COMPONENT.
FOLLOW SERVICE MANUAL INSTRUCTION CAREFULLY.

D: DRIVER INFLATOR WARNING TAG

WARNING SRS
TO PREVENT ACCIDENTAL DEPLOYMENT AND POSSIBLE INJURY:
ALWAYS INSTALL THE PROTECTIVE SHORT CONNECTOR ON THE INFLATOR CONNECTOR WHEN THE HARNESS IS DISCONNECTED.

E: DRIVER MODULE DANGER

⚠ DANGER
EXPLOSIVE/FLAMMABLE
CONTACT WITH ACID, WATER OR HEAVY METALS SUCH AS COPPER, LEAD OR MERCURY MAY PRODUCE HARMFUL AND IRRITATING GASES OR EXPLOSIVE COMPOUNDS.
STORAGE TEMPERATURES MUST NOT EXCEED 200°F (100°C). FOR PROPER HANDLING, STORAGE AND DISPOSAL PROCEDURES REFER TO THE SERVICE MANUAL, SRS SUPPLEMENT.
POISON
CONTAINS POISONOUS SODIUM AZIDE AND POTASSIUM NITRATE.
FIRST AID
IF CONTENTS ARE SWALLOWED, INDUCE VOMITING.
FOR EYE CONTACT, FLUSH EYES WITH WATER 15 MINUTES. IF GASES (FROM ACID OR WATER CONTACT) ARE INHALED, SEEK FRESH AIR. IN EVERY CASE, GET PROMPT MEDICAL ATTENTION.
KEEP OUT OF REACH OF CHILDREN

F: DRIVER MODULE WARNING

⚠ WARNING
THE AIRBAG INFLATOR IS EXPLOSIVE AND, IF ACCIDENTALLY DEPLOYED, CAN SERIOUSLY HURT OR KILL YOU.
- DO NOT USE ELECTRICAL TEST EQUIPMENT OR PROBING DEVICES.
  THEY CAN CAUSE ACCIDENTAL DEPLOYMENT.
- NO SERVICEABLE PARTS INSIDE. DO NOT DISASSEMBLE.
- PLACE AIRBAG UPRIGHT WHEN REMOVED.
- FOLLOW SERVICE MANUAL INSTRUCTIONS CAREFULLY.

(cont'd)

Warning/Caution Label Locations

(cont'd)

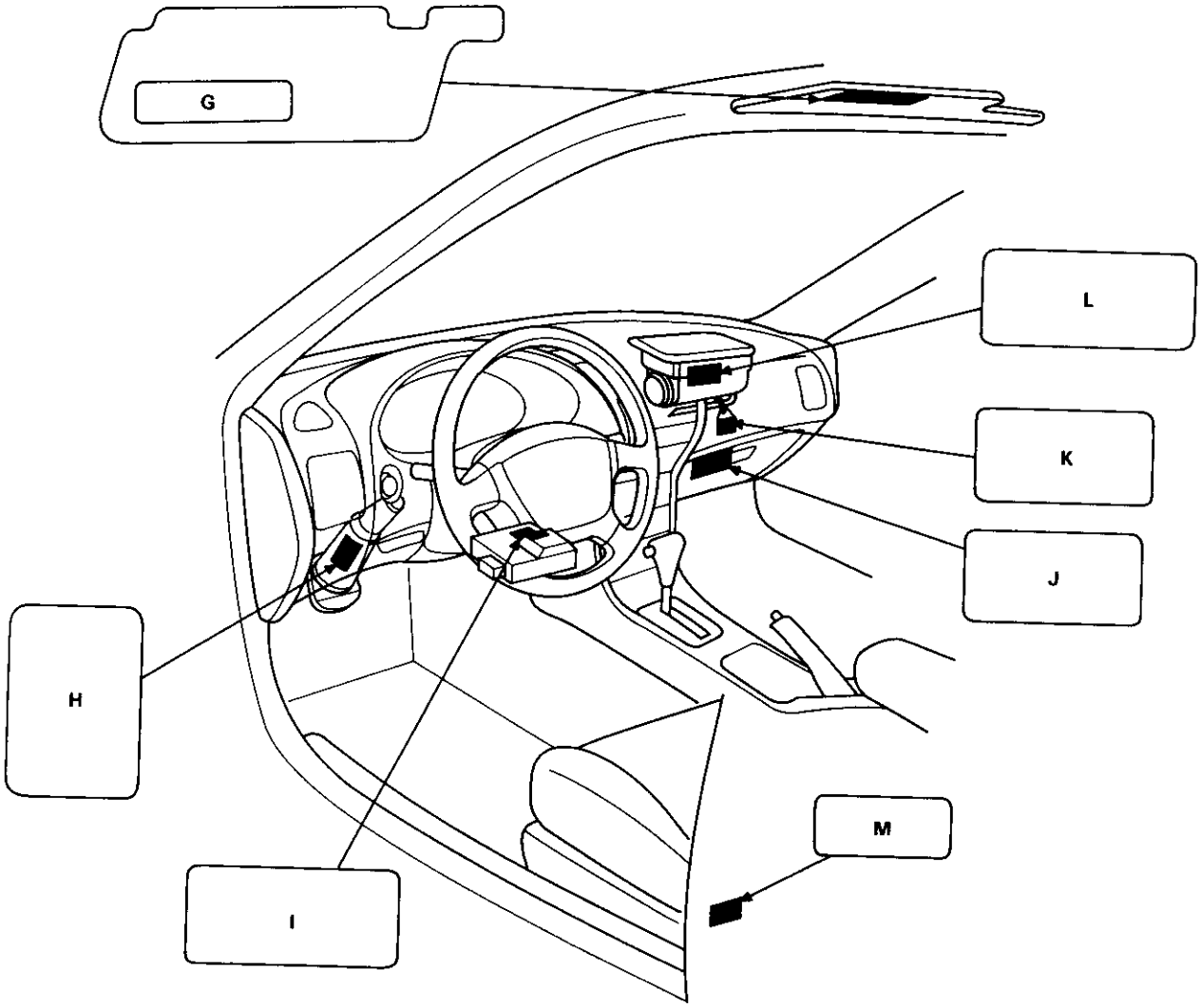

G: DRIVER INFORMATION (SUNVISOR)

SRS ALWAYS WEAR YOUR SEAT BELT
- THIS CARS EQUIPPED WITH A DRIVER AIRBAG AS A SUPPLEMENTAL RESTRAINT SYSTEM (SRS).
- IT IS DESIGNED TO SUPPLEMENT THE SEAT BELT.
- BEFORE DRIVING, READ LABEL INSIDE THE GLOVE BOX.

G: DRIVER INFORMATION (SUNVISOR)*

SRS ALWAYS WEAR YOUR SEAT BELT
- THIS CAR IS EQUIPPED WITH A DRIVER AIRBAG AND A FRONT SEAT PASSENGER AIRBAG AND A FRONT SEAT PASSENGER AIRBAG AS A SUPPLEMENTAL RESTRAINT SYSTEM (SRS)
- IT IS DESIGNED TO SUPPLEMENT THE SEAT BELT.
- BEFORE DRIVING, READ LABEL INSIDE THE GLOVE BOX.

H: STEERING COLUMN NOTICE

NOTICE
TO PREVENT SRS DAMAGE, REMOVE STEERING WHEEL BEFORE REMOVING STEERING SHAFT CONNECTING BOLT.

I: MONITOR NOTICE

NOTICE SRS
- NO SERVICEABLE PARTS INSIDE
- REFER TO SERVICE MANUAL FOR DETAILED INSTRUCTIONS.

*This version of the label is used in cars with a front seat passenger's airbag.

J: GLOVE BOX INFORMATION

AIRBAG INFORMATION
SUPPLEMENTAL RESTRAINT SYSTEM (SRS)
- THE SRS MUST BE INSPECTED TEN YEARS AFTER IT IS INSTALLED. THE DATE OF INSTALLATION IS SHOWN ON THE CERTIFICATION PLATE, LOCATED ON THE DRIVER'S DOOR JAMB.
- DIAGNOSTIC CHECKS AND REPLACEMENT OF SRS COMPONENTS MUST BE DONE BY AN AUTHORIZED DEALER
- SEE YOUR OWNER'S MANUAL FOR ADDITIONAL SRS INFORMATION.

K: FRONT SEAT PASSENGER INFLATOR WARNING TAG

⚠ WARNING
ACCIDENTAL AIRBAG DEPLOYMENT CAN SERIOUSLY HURT OR KILL YOU.
INSTALL THE RED SERVICE CONNECTOR WHEN THE INFLATOR HARNESS IS DISCONNECTED.

L: FRONT SEAT PASSENGER MODULE DANGER

⚠ DANGER
EXPLOSIVE/FLAMMABLE
CONTACT WITH ACID, WATER OR HEAVY METALS SUCH AS COPPER, LEAD OR MERCURY MAY PRODUCE HARMFUL AND IRRITATING GASES OR EXPLOSIVE COMPOUNDS.
STORGE TEMPERATURES MUST NOT EXCEED 200°F (100°C). FOR PROPER HANDLIING, STORAGE AND DISPOSAL PROCEDURES REFER TO THE SERVICE MANUAL, SRS SUPPLEMENT.
POISON
CONTAINS POISONOUS SODIUM AZIDE AND POTASSIUM NITRATE.
FIRST AID
IF CONTENTS ARE SWALLOWED, INDUCE VOMITING.
FOR EYE CONTACT, FLUSH EYES WITH WATER FOR 15 MINUTES.
IF GASES (FROM ACID OR WATER CONTACT) ARE INHALED, SEEK FRESH AIR. IN EVERY CASE, GET PROMPT MEDICAL ATTENTION.
KEEP OUT OF REACH OF CHILDREN.

⚠ WARNING
THE AIRBAG INFLATOR IS EXPLOSIVE AND, IF ACCIDENTALLY DEPLOYED, CAN SERIOUSLY HURT OR KILL YOU.
- DO NOT USE ELECTRICAL TEST EQUIPMENT OR PROBING DEVICES.
  THEY CAN CAUSE ACCIDENTAL DEPLOYMENT.
- NO SERVICEABLE PARTS INSIDE. DO NOT DISASSEMBLE.
- PLACE AIRBAG UPRIGHT WHEN REMOVED.
- FOLLOW SERVICE MANUAL INSTRUCTIONS CAREFULLY.

M: AIRBAG LABEL

AIRBAG

N: SRS WARNING (ENGINE HOOD)

SUPPLEMENTAL RESTRAINT SYSTEM (SRS)
THIS VEHICLE IS EQUIPPED WITH DRIVER SIDE AIRBAG.
ALL SRS ELECTRICAL WIRING AND CONNECTORS ARE COLORED YELLOW.
TAMPERING WITH, DISCONNECTING OR USING ELECTRICAL TEST EQUIPMENT ON THE SRS WIRING CAN MAKE THE SYSTEM INOPERATIVE OR CAUSE ACCIDENTAL FIRING OF THE INFLATOR.

⚠ WANING
THE AIRBAG INFLATOR IS EXPLOSIVE AND, IF ACCIDENTALLY DEPLOYED, CAN SERIOUSLY HURT YOU.
FOLLOW SERVICE MANUAL INSTRUCTIONS CAREFULLY.

N: SRS WARNING (ENGINE HOOD)*

SUPPLEMENTAL RESTRAINT SYSTEM (SRS)
THIS VEHICLE IS EQUIPPED WITH DRIVER AND FRONT SEAT PASSENGER AIRBAGS.
ALL SRS ELECTRICAL WIRING AND CONNECTORS ARE COLORED YELLOW.
TAMPERING WITH, DISCONNECTING OR USING ELECTRICAL TEST EQUIPMENT ON THE SRS WIRING CAN MAKE THE SYSTEM INOPERATIVE OR CAUSE ACCIDENTAL FIRING OF THE INFLATOR.

⚠ WARNING
THE AIRBAG INFLATOR IS EXPLOSIVE AND, IF ACCIDENTALLY DEPLOYED, CAN SERIOUSLY HURT YOU.
FOLLOW SERVICE MANUAL INSTRUCTIONS CAREFULLY.

*This version of the label is used in cars with a front seat passenger's airbag.

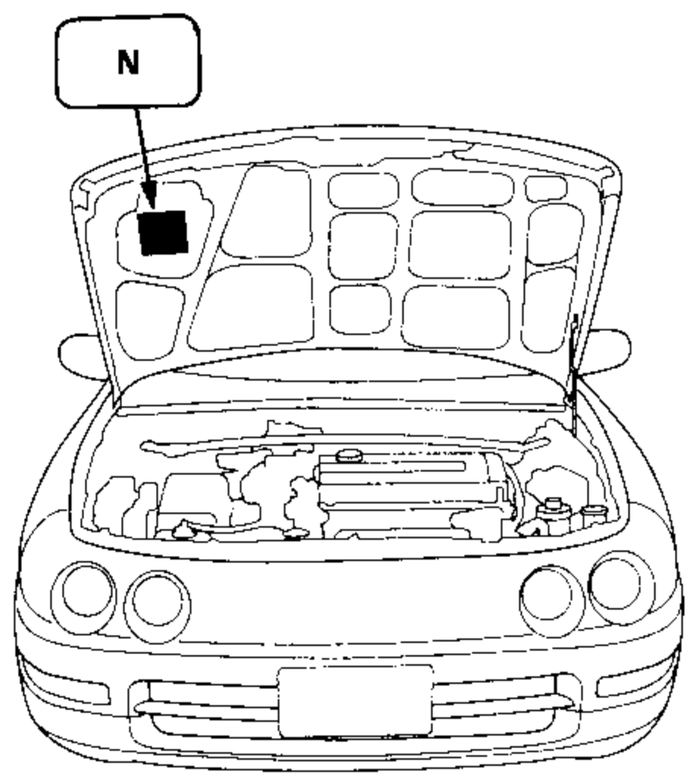

(cont'd)

Warning/Caution Label Locations

(cont'd)

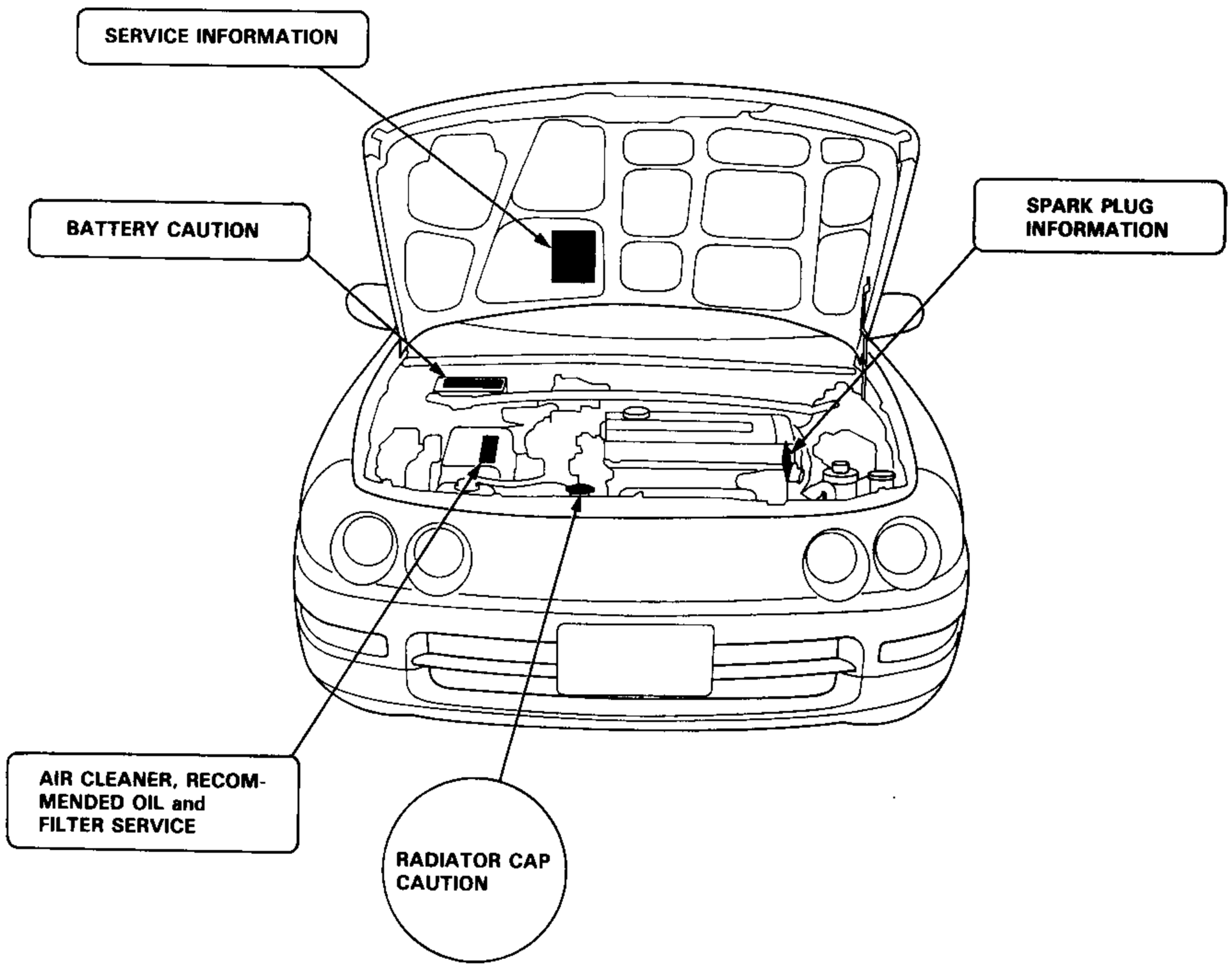

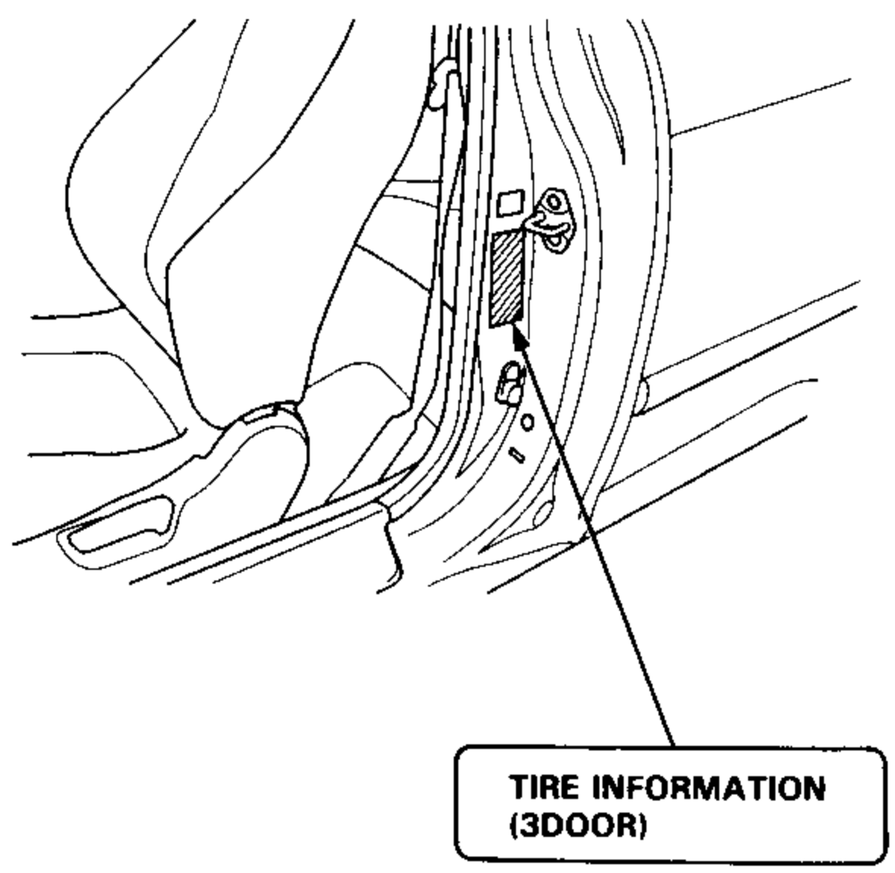

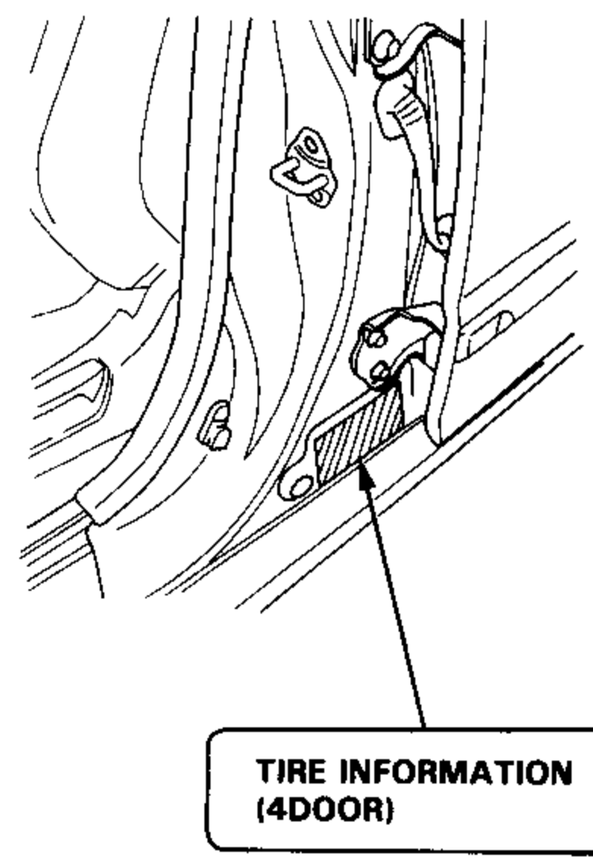

Lift and Support Points

Lift

⚠ WARNING When heavy rear components such as suspension, fuel tank, spare tire and hatch are to be removed, place additional weight in the luggage area before hoisting. When substantial weight is removed from the rear of the car, the center of gravity may change and can cause the car to tip forward on the hoist.

NOTE: Since each tire/wheel assembly weighs approximately 14 kg (30 lbs), placing the front wheels in trunk can assist with the weight distribution.

1. Place the lift blocks as shown.
2. Raise the hoist a few inches (centimeters) and rock the car to be sure it is firmly supported.
3. Raise the hoist to full height and inspect lift points for solid support.

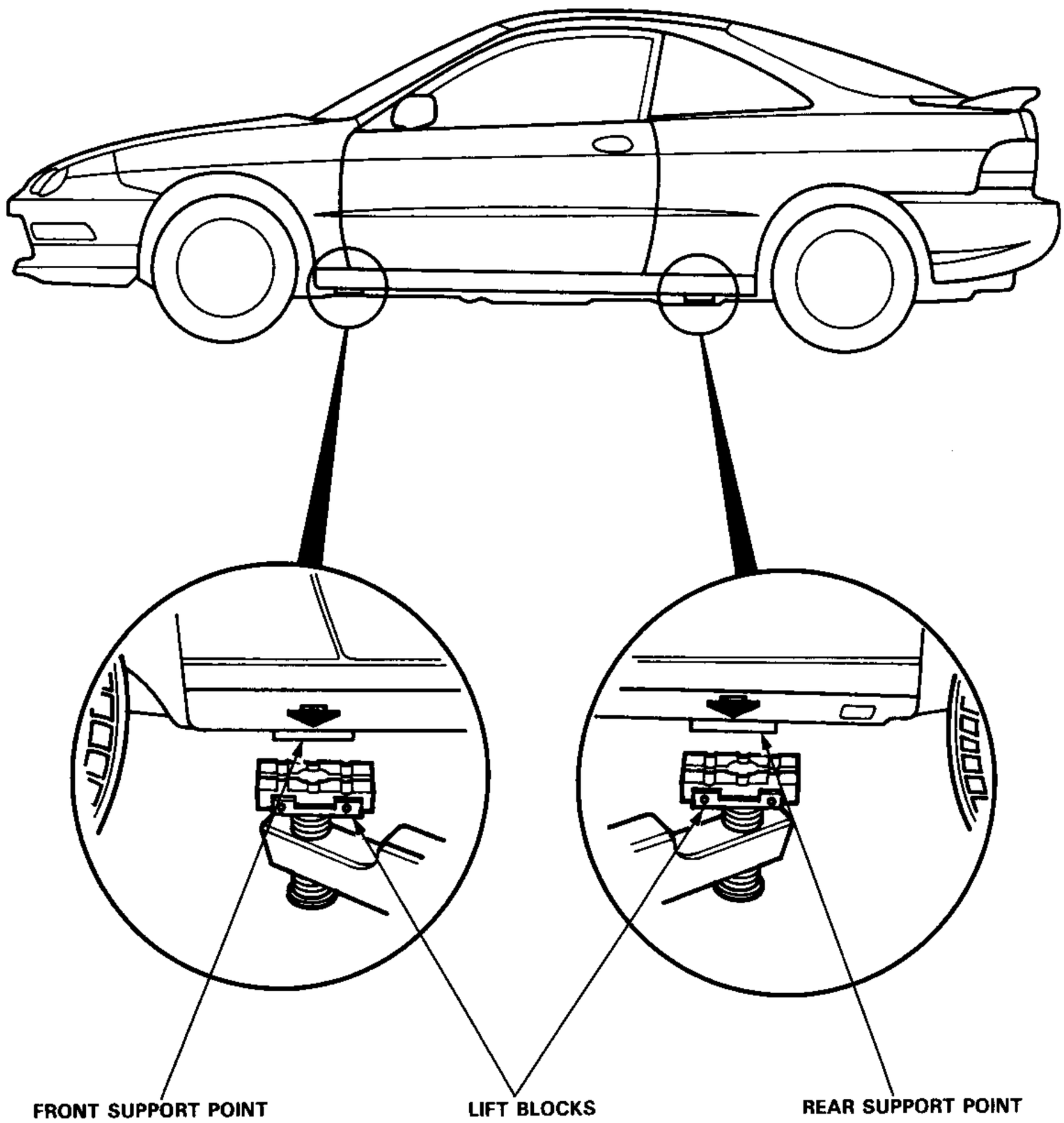

Lift and Support Points

Floor Jack

1. Set the parking brake and block the wheels that are not being lifted.
2. When lifting the rear of the car, put the gearshift lever in reverse (Automatic transmission in [P] position).
3. Raise the car high enough to insert the safety stands.
4. Adjust and place the safety stands as shown on page 1-11 so the car will be approximately level, then lower the car onto them.

⚠ WARNING

- **Always use safety stands when working on or under any vehicle that is supported by only a jack.**
- **Never attempt to use a bumper jack for lifting or supporting the car.**

Front

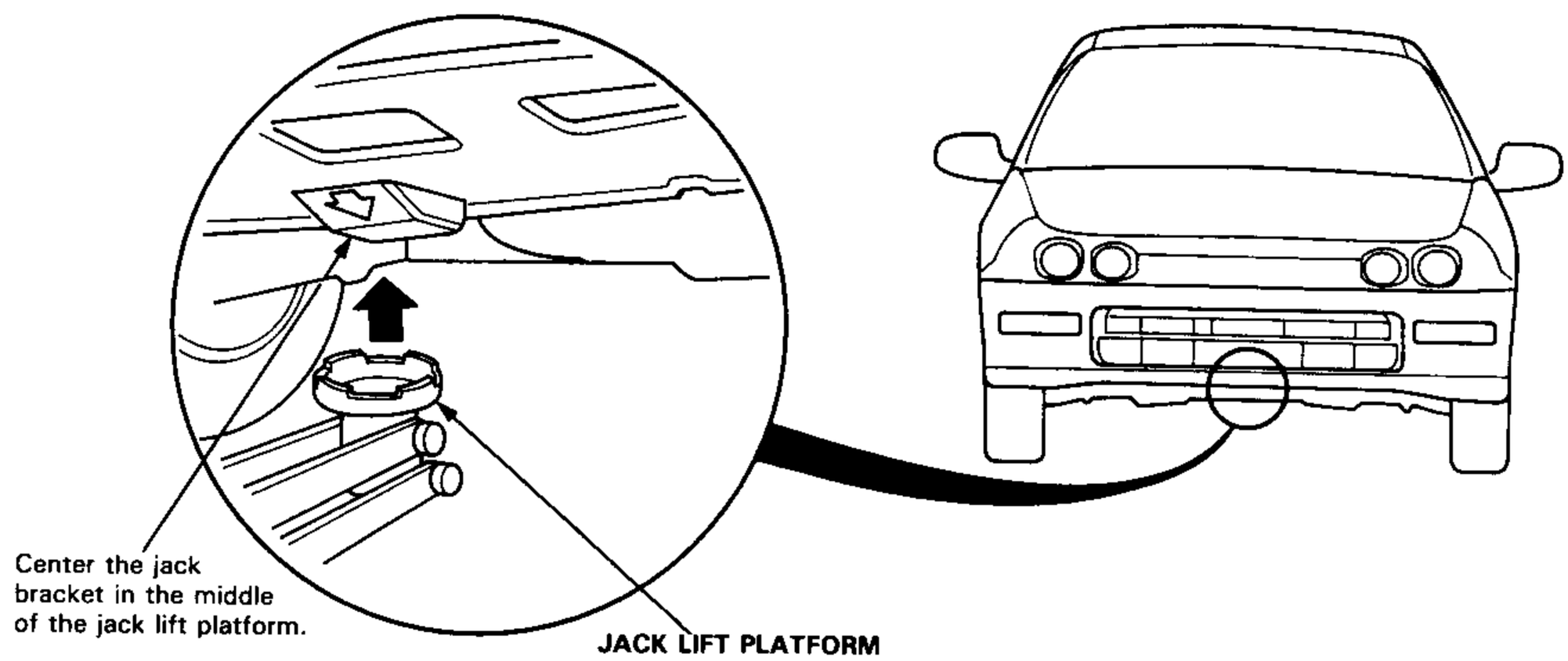

Rear

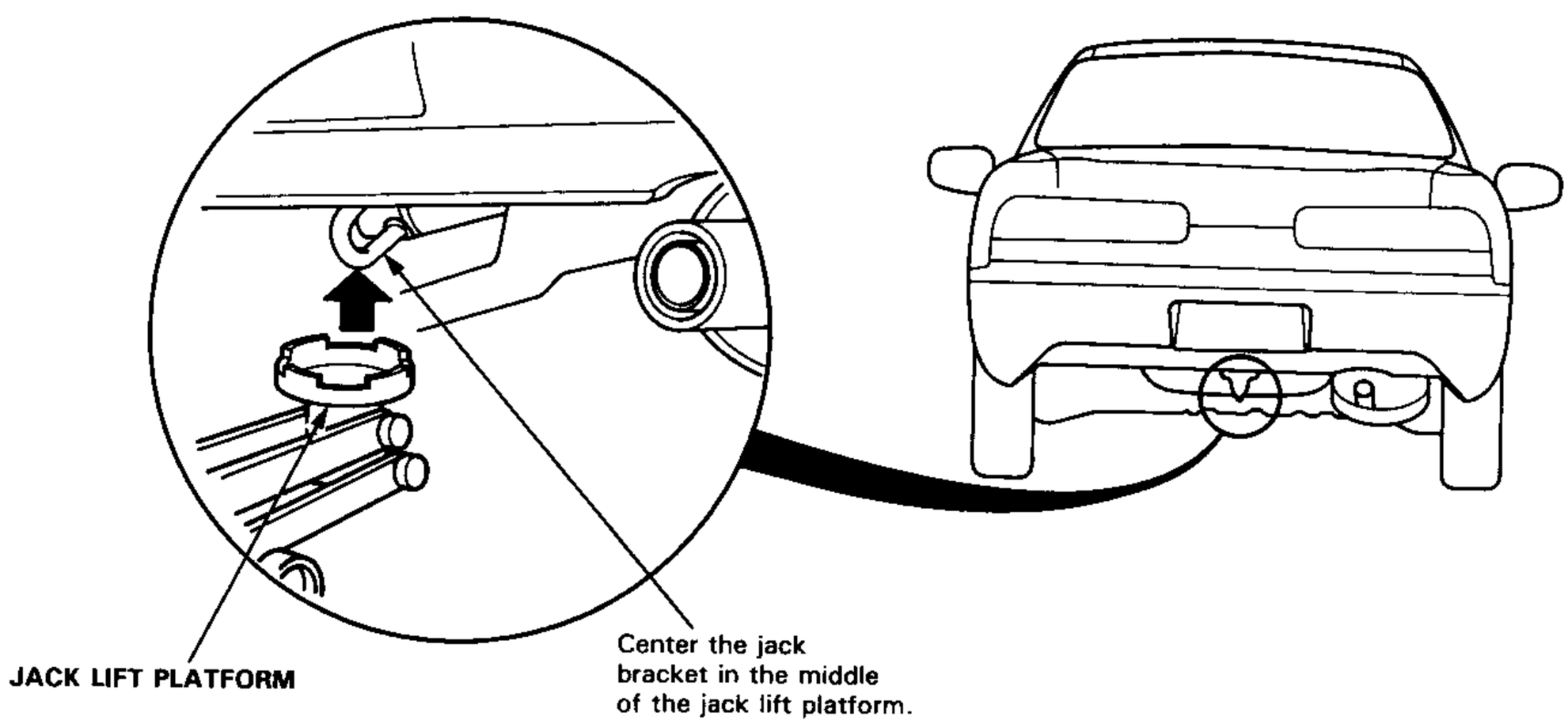

Safety Stands

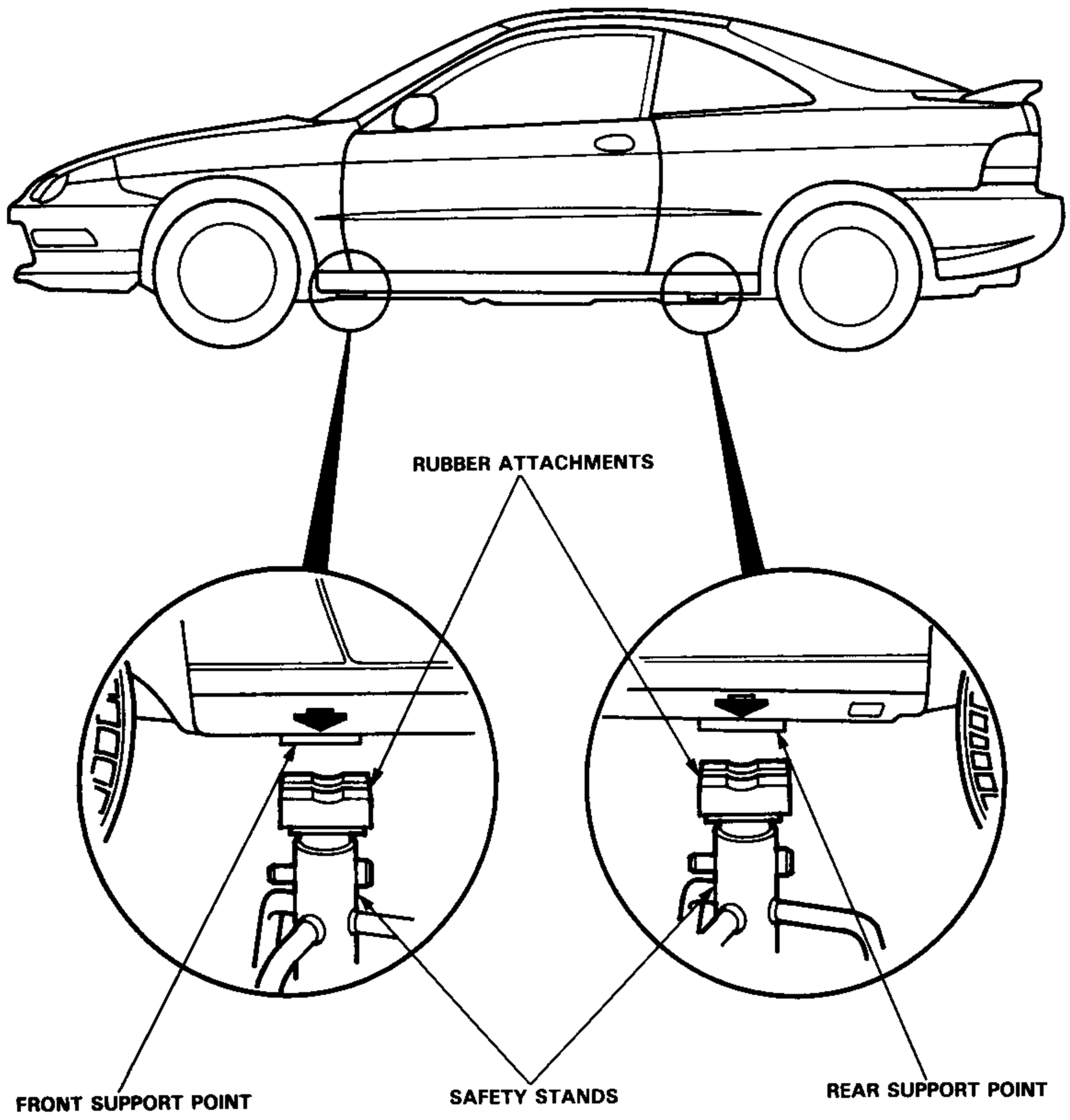

Towing

If the car needs to be towed, call a professional towing service. Never tow the car behind another car with just a rope or chain. It is very dangerous.

Emergency Towing
There are three popular methods of towing a car:

Flat-bed Equipment—The operator loads the car on the back of a truck. This is the best way of transporting the car.

Wheel Lift Equipment—The tow truck uses two pivoting arms that go under the tires (front or rear) and lifts them off the ground. The other two wheels remain on the ground.

Sling-type Equipment—The tow truck uses metal cables with hooks on the ends. These hooks go around parts of the frame or suspension and the cables lift that end of the car off the ground. The car's suspension and body can be seriously damaged if this method of towing is attempted.

If the car cannot be transported by flat-bed, it should be towed with the front wheels off the ground. If due to damage, the car must be towed with the front wheels on the ground, do the following:

Manual Transmission
- Release the parking brake.
- Shift the transmission to Neutral.

Automatic Transmission
- Release the parking brake.
- Start the engine.
- Shift to [D4] position, then to [N] position.
- Turn off the engine.

NOTICE: Improper towing preparation will damage the transmission. Follow the above procedure exactly. If you cannot shift the transmission or start the engine (automatic transmission), your car must be transported on a flat-bed.

- It is best to tow the car no farther than 50 miles (80 km), and keep the speed below 35 mph (55 km/h).

NOTICE: Trying to lift or tow your car by the bumpers will cause serious damage. The bumpers are not designed to support the car's weight.

Front:

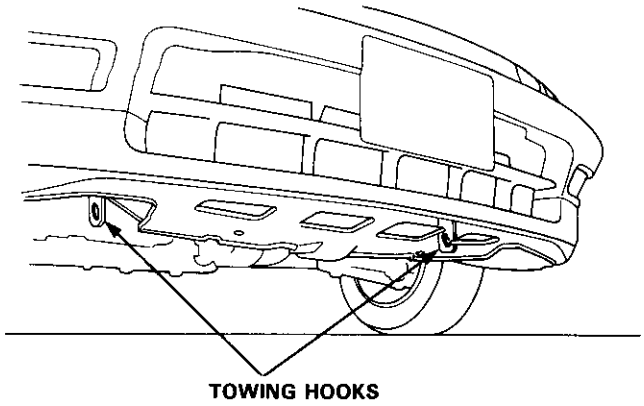

Rear:

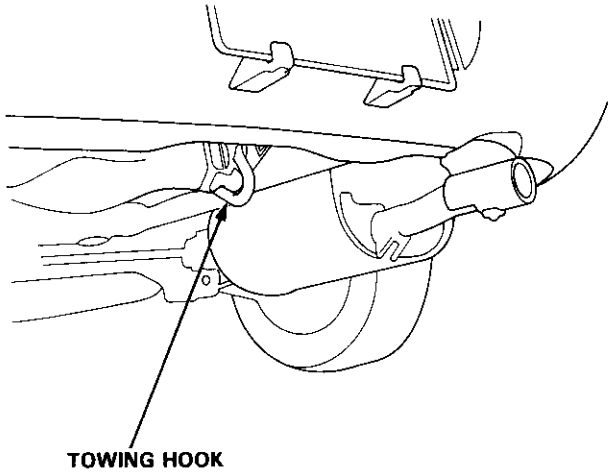

Special Tools

Individual tool lists are located at the front of each section.

Specifications

Standards and Service Limits 3-2
Design Specifications 3-17
Body Specifications 3-20

Standards and Service Limits

Cylinder Head/Valve Train (B18B1 engine) — Section 6

	MEASUREMENT		STANDARD (NEW)	SERVICE LIMIT
Compression	250 rpm and wide open throttle kPa (kgf/cm², psi)	Nominal	1,370 (14.0, 199)	
		Minimum	930 (9.5, 140)	
		Maximum variation	200 (2.0, 28)	
Cylinder head	Warpage		—	0.05 (0.002)
	Height		131.95 – 132.05 (5.195 – 5.199)	—
Camshaft	End play		0.05 – 0.15 (0.002 – 0.006)	0.5 (0.02)
	Camshaft-to-holder oil clearance		0.030 – 0.069 (0.0012 – 0.0027)	0.15 (0.006)
	Total runout		0.03 (0.001) max.	0.04 (0.002)
	Cam lobe height	IN	33.716 (1.3274)	—
		EX	33.528 (1.3200)	—
Valve	Valve clearance (Cold)*	IN	0.08 – 0.12 (0.003 – 0.005)	—
		EX	0.16 – 0.20 (0.006 – 0.008)	—
	Valve stem O.D.	IN	6.580 – 6.590 (0.2591 – 0.2594)	6.55 (0.258)
		EX	6.550 – 6.560 (0.2579 – 0.2583)	6.52 (0.257)
	Stem-to-guide clearance	IN	0.02 – 0.05 (0.001 – 0.002)	0.08 (0.003)
		EX	0.05 – 0.08 (0.002 – 0.003)	0.11 (0.004)
Valve seat	Width	IN	1.25 – 1.55 (0.049 – 0.061)	2.0 (0.08)
		EX	1.25 – 1.55 (0.049 – 0.061)	2.0 (0.08)
	Stem installed height	IN	40.765 – 41.235 (1.6049 – 1.6234)	41.485 (1.6333)
		EX	42.765 – 43.235 (1.6837 – 1.7022)	43.485 (1.7120)
Valve spring	Free length (Reference)	IN	42.36 (1.668)	41.56 (1.636)
		EX NH	47.09 (1.854)	46.27 (1.822)
		EX CH	47.08 (1.854)	46.27 (1.822)
Valve guide	I.D.	IN	6.61 – 6.63 (0.260 – 0.261)	6.65 (0.262)
		EX	6.61 – 6.63 (0.260 – 0.261)	6.65 (0.262)
	Installed height	IN	13.75 – 14.25 (0.541 – 0.561)	—
		EX	15.75 – 16.25 (0.620 – 0.640)	—

*: Measured between the camshaft and rocker arm.
NH: NIHON HATSUJO manufactured valve spring
CH: CHUO HATSUJO manufactured valve spring

Unit of length: mm (in)

Engine Block (B18B1 engine) — Section 7

	MEASUREMENT			STANDARD (NEW)	SERVICE LIMIT
Cylinder block	Warpage of deck surface			0.07 (0.003) max.	0.10 (0.004)
	Bore diameter			81.00 – 81.02 (3.189 – 3.190)	81.07(3.192)
	Bore taper			—	0.05 (0.002)
	Reboring limit			—	0.25 (0.010)
Piston	Skirt O.D. at 15 mm (0.6 in) from bottom of skirt			80.98 – 80.99 (3.188 – 3.189)	80.97 (3.188)
	Clearance in cylinder			0.01 – 0.04 (0.0004 – 0.0016)	0.05 (0.002)
	Groove width (For ring)	Top		1.030 – 1.040 (0.0406 – 0.0409)	1.06 (0.042)
		Second		1.230 – 1.240 (0.0484 – 0.0488)	1.26 (0.050)
		Oil		2.805 – 2.820 (0.1104 – 0.1110)	2.84 (0.112)
Piston ring	Ring-to-groove clearance	Top		0.045 – 0.070 (0.0018 – 0.0028)	0.13 (0.005)
		Second	R	0.040 – 0.065 (0.0016 – 0.0026)	0.13 (0.005)
			T	0.045 – 0.070 (0.0018 – 0.0028)	0.13 (0.005)
	Ring end gap	Top	R	0.20 – 0.35 (0.008 – 0.014)	0.60 (0.024)
			T	0.20 – 0.30 (0.008 – 0.012)	0.60 (0.024)
		Second		0.40 – 0.55 (0.016 – 0.022)	0.70 (0.028)
		Oil	R	0.20 – 0.50 (0.008 – 0.020)	0.70 (0.028)
			T	0.20 – 0.45 (0.008 – 0.018)	0.70 (0.028)
Piston Pin	O.D.			20.994 – 21.000 (0.8265 – 0.8268)	—
	Pin-to-piston clearance			0.010 – 0.022 (0.0004 – 0.0009)	—
Connecting rod	Pin-to-rod interference			0.013 – 0.032 (0.0005 – 0.0013)	—
	Small end bore diameter			20.968 – 20.981 (0.8255 – 0.8260)	—
	Large end bore diameter	Nominal		48.0 (1.89)	—
	End play installed on crankshaft			0.15 – 0.30 (0.006 – 0.012)	0.40 (0.016)
Crankshaft	Main journal diameter				
		No. 1, 2, 4 and 5 journals		54.976 – 55.000 (2.1644 – 2.1654)	—
		No. 3 journal		54.970 – 54.994 (2.1642 – 2.1651)	—
	Rod journal diameter			44.976 – 45.000 (1.7707 – 1.7717)	—
	Taper			0.005 (0.0002) max.	0.010 (0.0004)
	Out-of-round			0.005 (0.0002) max.	0.010 (0.0004)
	End play			0.10 – 0.35 (0.004 – 0.014)	0.45 (0.018)
	Runout			0.03 (0.001) max.	0.04 (0.002)
Bearing	Main bearing-to-journal oil clearance				
		No. 1, 2, 4 and 5 journals		0.024 – 0.042 (0.0009 – 0.0017)	0.050 (0.0020)
		No. 3 journal		0.030 – 0.048 (0.0012 – 0.0019)	0.060 (0.0024)
	Rod bearing-to-journal oil clearance			0.020 – 0.038 (0.0008 – 0.0015)	0.050 (0.0020)

R: RIKEN manufacture piston ring
T: TEIKOKU PISTON RING manufacture piston ring

Standards and Service Limits

Cylinder Head/Valve Train (B18C1 engine) — Section 6

	MEASUREMENT				STANDARD (NEW)	SERVICE LIMIT
Compression	250 rpm and wide open throttle kPa (kgf/cm², psi)		Nominal		1,860 (19.0, 270)	
			Minimum		930 (9.5, 140)	
			Maximum variation		200 (2.0, 28)	
Cylinder head	Warpage				—	0.05 (0.002)
	Height				141.95 – 142.05 (5.589 – 5.593)	—
Camshaft	End play				0.05 – 0.15 (0.002 – 0.006)	0.5 (0.02)
	Camshaft-to-holder oil clearance				0.050 – 0.089 (0.0020 – 0.0035)	0.15 (0.006)
	Total runout				0.015 (0.0006) max.	0.03 (0.001)
	Cam lobe height	IN	Primary		33.411 (1.3154)	—
			Mid		36.377 (1.4322)	—
			Secondary		34.547 (1.3601)	—
		EX	Primary		33.111 (1.3036)	—
			Mid		35.720 (1.4063)	—
			Secondary		34.381 (1.3536)	—
Valve	Valve clearance (Cold)*			IN	0.15 – 0.19 (0.006 – 0.007)	—
				EX	0.17 – 0.21 (0.007 – 0.008)	—
	Valve stem O.D.			IN	5.475 – 5.485 (0.2156 – 0.2159)	5.445 (0.2144)
				EX	5.450 – 5.460 (0.2146 – 0.2150)	5.420 (0.2134)
	Stem-to-guide clearance			IN	0.025 – 0.055 (0.0010 – 0.0022)	0.08 (0.003)
				EX	0.050 – 0.080 (0.0020 – 0.0031)	0.11 (0.004)
Valve seat	Width			IN	1.25 – 1.55 (0.049 – 0.061)	2.0 (0.08)
				EX	1.25 – 1.55 (0.049 – 0.061)	2.0 (0.08)
	Stem installed height			IN	37.465 – 37.935 (1.4750 – 1.4935)	38.185 (1.5033)
				EX	37.165 – 37.635 (1.4632 – 1.4817)	37.885 (1.4915)
Valve spring	Free length (Reference)	IN	Outer		41.05 (1.616)	40.26 (1.585)
			Inner	NH	36.16 (1.424)	35.30 (1.390)
				CH	36.19 (1.425)	35.30 (1.390)
		EX		NH	41.96 (1.652)	40.95 (1.612)
				CH	41.94 (1.651)	40.95 (1.612)
Valve guide	I.D.			IN	5.51 – 5.53 (0.217 – 0.218)	5.55 (0.219)
				EX	5.51 – 5.53 (0.217 – 0.218)	5.55 (0.219)
	Installed height			IN	12.55 – 13.05 (0.494 – 0.514)	—
				EX	12.55 – 13.05 (0.494 – 0.514)	—
Rocker arm	Arm-to-shaft clearance			IN	0.025 – 0.052 (0.0010 – 0.0020)	0.08 (0.003)
				EX	0.025 – 0.052 (0.0010 – 0.0020)	0.08 (0.003)

*: Measured between the camshaft and rocker arm.
NH: NIHON HATSUJO manufacture valve spring
CH: CHUO HATSUJO manufacture valve spring

Unit of length: mm (in)

Engine Block (B18C1 engine) — Section 7

	MEASUREMENT		STANDARD (NEW)	SERVICE LIMIT
Cylinder block	Warpage of deck surface		0.05 (0.002) max.	0.08 (0.003)
	Bore diameter		81.00 – 81.02 (3.189 – 3.190)	81.07 (3.192)
	Bore taper		———	0.05 (0.002)
	Reboring limit		———	0.25 (0.010)
Piston	Skirt O.D. at 15 mm (0.6 in) from bottom of skirt		80.98 – 80.99 (3.188 – 3.189)	80.97 (3.188)
	Clearance in cylinder		0.01 – 0.04 (0.0004 – 0.0016)	0.05 (0.002)
	Groove width (For ring)	Top	1.030 – 1.040 (0.0406 – 0.0409)	1.060 (0.0417)
		Second	1.230 – 1.240 (0.0484 – 0.0488)	1.260 (0.0496)
		Oil	2.805 – 2.820 (0.1104 – 0.1110)	2.840 (0.1118)
Piston ring	Ring-to-piston groove clearance	Top	0.045 – 0.070 (0.0018 – 0.0028)	0.13 (0.005)
		Second	0.040 – 0.065 (0.0016 – 0.0026)	0.13 (0.005)
	Ring end gap	Top	0.20 – 0.35 (0.008 – 0.014)	0.60 (0.024)
		Second	0.40 – 0.55 (0.016 – 0.022)	0.70 (0.028)
		Oil	0.20 – 0.50 (0.008 – 0.020)	0.70 (0.028)
Piston Pin	O.D.		20.994 – 21.000 (0.8265 – 0.8268)	———
	Pin-to-piston clearance		0.010 – 0.022 (0.0004 – 0.0009)	———
Connecting rod	Pin-to-rod interference		0.017 – 0.036 (0.0007 – 0.0014)	———
	Small end bore diameter		20.964 – 20.997 (0.8254 – 0.8267)	———
	Large end bore diameter	Nominal	48.0 (1.89)	———
	End play installed on crankshaft		0.15 – 0.30 (0.006 – 0.012)	0.40 (0.016)
Crankshaft	Main journal diameter			
		No. 1, 2, 4 and 5 journals	54.976 – 55.000 (2.1644 – 2.1654)	———
		No. 3 journal	54.974 – 54.998 (2.1643 – 2.1653)	———
	Rod journal diameter		44.976 – 45.000 (1.7707 – 1.7717)	———
	Taper		0.005 (0.0002) max.	———
	Out-of round		0.004 (0.0002) max.	0.006 (0.0002)
	End play		0.10 – 0.35 (0.004 – 0.014)	0.45 (0.018)
	Runout		0.020 (0.0008) max.	0.03 (0.0012)
Bearing	Main bearing-to-journal oil clearance			
		No. 1, 2, 4 and 5 journals	0.024 – 0.042 (0.0009 – 0.0017)	0.050 (0.0020)
		No. 3 journal	0.030 – 0.048 (0.0012 – 0.0019)	0.060 (0.0024)
	Rod bearing-to-journal oil clearance		0.032 – 0.050 (0.0013 – 0.0020)	0.060 (0.0024)

Standards and Service Limits

Engine Lubrication — Section 8

	MEASUREMENT		STANDARD (NEW)	SERVICE LIMIT
Engine oil	Capacity ℓ (US qt, Imp qt)	B18B1 engine	4.6 (4.9, 4.0) for engine overhaul 3.8 (4.0, 3.3) for oil change, including filter 3.5 (3.7, 3.1) for oil change, without filter	
		B18C1 engine	4.8 (5.1, 4.2) for engine overhaul 4.0 (4.2, 3.5) for oil change, including filter 3.7 (3.9, 3.3) for oil change, without filter	
Oil pump	Inner-to-outer rotor clearance Pump housing-to-outer rotor clearance Pump housing-to-rotor axial clearance		0.04 – 0.16 (0.002 – 0.006) 0.10 – 0.19 (0.004 – 0.007) 0.02 – 0.07 (0.001 – 0.003)	0.20 (0.008) 0.21 (0.008) 0.15 (0.006)
Relief valve	Pressure setting at engine oil temp. 176°F (80°C) kPa (kgf/cm², psi)	At idle At 3,000 rpm	70 (0.7, 10) min. 340 (3.5, 50) min.	

Cooling — Section 10

	MEASUREMENT		STANDARD (NEW)
Radiator	Coolant capacity ℓ (US qt, Imp qt) [Including engine, heater, cooling line and reservoir] Reservoir capacity: 0.6 ℓ (0.63 US qt, 0.53 Imp qt)	B18B1 engine B18C1 engine	M/T: 6.4 (6.8, 5.6) for overhaul 4.4 (4.6, 3.9) for coolant change* A/T: 6.7 (7.1, 5.9) for overhaul 4.7 (5.0, 4.1) for coolant change* M/T: 6.7 (7.1, 5.9) for overhaul 4.7 (5.0, 4.1) for coolant change*
Radiator cap	Opening pressure kPa (kgf/cm², psi)		93 – 123 (0.95 – 1.25, 13.5 – 17.8)
Thermostat	Start to open °F (°C) Fully open °F (°C) Valve lift at fully open		169 – 176 (76 – 80) 194 (90) 8.0 (0.31) min.
Cooling fan	Thermoswitch "ON" temperature °F (°C) Thermoswitch "OFF" temperature °F (°C)		196 – 203 (91 – 95) Subtract 5 – 14 (3 – 8) from actual "ON" temperature

*: Including the coolant in the reservoir and that remaining in the engine.

Unit of length: mm (in)

Fuel and Emissions — Section 11

	MEASUREMENT		STANDARD (NEW)	SERVICE LIMIT
Fuel pump	Displacement in 12 V, 10 seconds mℓ (fl oz, Imp oz)	B18B1 engine B18C1 engine	222 (7.5, 7.8) min. 364 (12.3, 12.8) min.	120 (4.1, 4.2) 100 (3.4, 3.5)
Pressure regulator	Pressure with regulator vacuum hose disconnected kPa (kgf/cm², psi)	B18B1 engine B18C1 engine	275 – 324 (2.80 – 3.30, 39.8 – 46.9) 329 – 378 (3.35 – 3.85, 47.6 – 5.47)	
Fuel tank	Capacity ℓ (US gal, Imp gal)		50 (13.2, 11.0)	
Engine	Idle speed with headlight and cooling fan off rpm		750 ± 50 (M/T: neutral) 750 ± 50 (A/T: N or P position)	
	Fast idle rpm		1,600 ± 200 (M/T: neutral) 1,600 ± 200 (A/T: N or P position)	
	Idle CO %		0.1 max.	

Clutch — Section 12

	MEASUREMENT		STANDARD (NEW)	SERVICE LIMIT
Clutch pedal	Pedal height Stroke Pedal play Disengagement height	to floor to floor	164 (6.46) 130 – 140 (5.12 – 5.51) 12 – 21 (0.47 – 0.83) 83 (3.27) min.	—— —— —— ——
Flywheel	Clutch surface runout		0.05 (0.002) max.	0.15 (0.006)
Clutch disc	Rivet head depth Thickness		1.3 (0.05) min. 8.4 – 9.1 (0.33 – 0.36)	0.2 (0.01) 6.0 (0.24)
Pressure plate	Warpage Diaphragm spring finger alignment		0.03 (0.001) max. 0.6 (0.02) max.	0.15 (0.006) 0.8 (0.03)

Standards and Service Limits

Manual Transmission — Section 13

	MEASUREMENT	STANDARD (NEW)	SERVICE LIMIT
Transmission oil	Capacity ℓ (US qt, Imp qt)	2.2 (2.3, 1.9) for oil change 2.3 (2.4, 2.0) for assembly	
Mainshaft	End play	0.11 – 0.18 (0.004 – 0.007)	Adjust
	Diameter of ball bearing contact area (clutch housing side)	27.977 – 27.990 (1.101 – 1.102)	27.93 (1.10)
	Diameter of 3rd gear contact area	37.984 – 38.000 (1.495 – 1.496)	37.93 (1.493)
	Diameter of ball bearing contact area (transmission housing side)	27.987 – 28.000 (1.1018 – 1.1024)	27.94 (1.10)
	Runout	0.02 (0.0008) max.	0.05 (0.002)
Mainshaft 3rd and 4th gears	I.D.	43.009 – 43.025 (1.6933 – 1.6939)	43.08 (1.696)
	End play	0.06 – 0.21 (0.0024 – 0.0083)	0.3 (0.012)
	Thickness 3rd	34.92 – 34.97 (1.3748 – 1.3768)	34.8 (1.370)
	Thickness 4th	31.42 – 31.47 (1.2370 – 1.2390)	31.3 (1.232)
Mainshaft 5th gear	I.D.	43.009 – 43.025 (1.6933 – 1.6939)	43.08 (1.696)
	End play	0.06 – 0.21 (0.0024 – 0.0083)	0.3 (0.012)
	Thickness	31.42 – 31.47 (1.237 – 1.239)	31.3 (1.232)
Countershaft	Diameter of needle bearing contact area	33.000 – 33.015 (1.299 – 1.300)	32.95 (1.297)
	Diameter of ball bearing contact area	24.980 – 24.993 (0.9835 – 0.9840)	24.94 (0.982)
	Diameter of 1st gear contact area	36.984 – 37.000 (1.4561 – 1.4567)	36.93 (1.454)
	Runout	0.02 (0.0008) max.	0.05 (0.002)
Countershaft 1st gear	I.D.	42.009 – 42.025 (1.6539 – 1.6545)	42.08 (1.657)
	End play	0.04 – 0.12 (0.0016 – 0.0047)	Adjust
Countershaft 2nd gear	I.D.	47.009 – 47.025 (1.8507 – 1.8514)	47.08 (1.854)
	End play	0.05 – 0.12 (0.0020 – 0.0047)	Adjust
	Thickness B18B1 engine	34.62 – 34.67 (1.3630 – 1.3650)	34.5 (1.358)
	Thickness B18C1 engine	28.92 – 28.97 (1.1386 – 1.1405)	28.8 (1.134)
Spacer collar (Countershaft 2nd gear)	I.D.	36.48 – 36.49 (1.4362 – 1.4366)	36.5 (1.437)
	O.D.	41.989 – 42.000 (1.6531 – 1.6535)	41.94 (1.651)
	Length A	29.02 – 29.04 (1.1425 – 1.1433)	———
	Length B	29.07 – 29.09 (1.1444 – 1.1453)	———
Spacer collar (Mainshaft 4th and 5th gears)	I.D.	31.002 – 31.012 (1.2205 – 1.2209)	31.06 (1.223)
	O.D.	37.989 – 38.000 (1.4956 – 1.4961)	37.94 (1.494)
	Length A	56.45 – 56.55 (2.2224 – 2.2264)	———
	Length B	26.03 – 26.08 (1.0248 – 1.0268)	———

Unit of length: mm (in)

Manual Transmission — Section 13

	MEASUREMENT	STANDARD (NEW)	SERVICE LIMIT
Reverse idler gear *1	I.D. Gear-to-reverse gear shaft clearance	20.016 – 20.043 (0.7880 – 0.7891) 0.036 – 0.084 (0.0014 – 0.0033)	20.09 (0.7909) 0.16 (0.006)
Synchro ring	Ring-to-gear clearance (ring pushed against gear)	0.85 – 1.10 (0.033 – 0.043)	0.4 (0.016)
Double cone synchro ring *2	Clearance (ring pushed against gear) Outer synchro ring-to-gear Inner synchro ring-to-gear Outer synchro ring-to-synchro cone	 0.95 – 1.68 (0.037 – 0.066) 0.5 – 1.0 (0.02 – 0.04) 0.5 – 1.0 (0.02 – 0.04)	 0.6 (0.024) 0.3 (0.01) 0.3 (0.01)
Shift fork	Shift fork finger thickness Fork-to-synchro sleeve clearance	7.4 – 7.6 (0.291 – 0.299) 0.35 – 0.65 (0.014 – 0.026)	—— 1.0 (0.039)
Reverse shift fork	Shift fork pawl groove width Fork-to-reverse idler gear clearance "L" groove width at 5th gear side at reverse gear side Fork-to-5th/reverse shift piece pin clearance at 5th gear side at reverse gear side	13.0 – 13.3 (0.512 – 0.524) 0.5 – 1.1 (0.020 – 0.043) 7.40 – 7.70 (0.291 – 0.303) 7.05 – 7.25 (0.278 – 0.285) 0.4 – 0.9 (0.016 – 0.035) 0.05 – 0.45 (0.0020 – 0.018)	—— 1.8 (0.07) —— —— —— ——
Shift arm	Groove width of change piece contact area Change piece-to-shift arm clearance	11.8 – 12.0 (0.4646 – 0.4724) 0.05 – 0.35 (0.002 – 0.014)	—— 0.80 (0.031)
Shift piece	Groove width of shift arm contact area Shift piece-to-shift arm clearance I.D. Shift piece-to-shaft clearance Diameter of shift fork contact area Shift piece-to-shift fork shaft clearance	7.9 – 8.0 (0.311 – 0.315) 0.10 – 0.30 (0.004 – 0.012) 14.000 – 14.068 (0.551 – 0.554) 0.011 – 0.092 (0.0004 – 0.0036) 11.90 – 12.00 (0.469 – 0.472) 0.20 – 0.50 (0.008 – 0.020)	—— 0.60 (0.024) —— 0.150 (0.0059) —— 0.80 (0.031)
Selector arm	Diameter of change piece contact area Arm-to-change piece clearance Groove width of interlock contact area Arm-to-interlock clearance	11.90 – 12.00 (0.469 – 0.472) 0.05 – 0.35 (0.002 – 0.014) 10.05 – 10.15 (0.3957 – 0.3996) 0.05 – 0.25 (0.002 – 0.010)	—— 0.50 (0.020) —— 0.50 (0.020)

*1: B18B1 engine
*2: B18C1 engine

Automatic Transmission — Section 14

	MEASUREMENT	STANDARD (NEW)	SERVICE LIMIT
Transmission fluid	Capacity ℓ (US qt, Imp qt)	5.9 (6.2, 5.2) for overhaul 2.7 (2.9, 2.4) for fluid change	
Hydraulic pressure kPa (kgf/cm², psi)	Line pressure at 2,000 rpm ([N] or [P] position)	830 – 880 (8.5 – 9.0, 120 – 130)	780 (8.0, 110)
	2nd clutch pressure at 2,000 rpm ([D4] position)	460 – (4.7, 67) throttle fully closed | 830 – 880 (8.5 – 9.0, 120 – 130) throttle more than 3/16 opened	410 (4.2, 60) throttle fully closed | 780 (8.0, 110) throttle more than 3/16 opened
	3rd clutch pressure at 2,000 rpm ([D4] position)		
	4th clutch pressure at 2,000 rpm ([D4] position)		
	2nd clutch pressure at 2,000 rpm ([2] position)	830 – 880 (8.5 – 9.0, 120 – 130)	780 (8.0, 110)
	1st clutch pressure at 2,000 rpm ([D4] or [1] position)	830 – 880 (8.5 – 9.0, 120 – 130)	780 (8.0, 110)
	1st-hold clutch pressure at 2,000 rpm ([1] position)	830 – 880 (8.5 – 9.0, 120 – 130)	780 (8.0, 110)
	Throttle pressure B Throttle fully closed Throttle fully opened	0 – 15 (0 – 0.15, 0 – 21) 830 – 880 (8.5 – 9.0, 120 – 130)	—— 780 (8.0, 110)
Stall speed rpm (Check with car on level ground)		2,200 – 2,600	Below 2,200, above 2,600

(cont'd)

Standards and Service Limits

Automatic Transmission (cont'd) — Section 14

	MEASUREMENT		STANDARD (NEW)	SERVICE LIMIT
Clutch	Clutch initial clearance	1st, 2nd	0.65 – 0.85 (0.026 – 0.033)	———
		3rd, 4th	0.40 – 0.60 (0.016 – 0.024)	———
		1st-hold	0.5 – 0.8 (0.020 – 0.031)	———
	Clutch return spring free length	1st, 3rd, 4th	31.0 (1.22)	29.0 (1.14)
		2nd	33.2 (1.31)	31.2 (1.23)
		1st-hold	34.6 (1.36)	32.6 (1.28)
	Clutch disc thickness		1.8 – 2.0 (0.071 – 0.079)	Until grooves worn out
	Clutch plate thickness		1.95 – 2.05 (0.077 – 0.081)	Discoloration
	Clutch end plate thickness (1st)	MARK 1	2.05 – 2.10 (0.081 – 0.083)	Discoloration
		MARK 2	2.15 – 2.20 (0.085 – 0.087)	↑
		MARK 3	2.25 – 2.30 (0.089 – 0.091)	
		MARK 4	2.35 – 2.40 (0.093 – 0.094)	
		MARK 5	2.45 – 2.50 (0.096 – 0.098)	
		MARK 6	2.55 – 2.60 (0.100 – 0.102)	
		MARK 7	2.65 – 2.70 (0.104 – 0.106)	
		MARK 8	2.75 – 2.80 (0.108 – 0.110)	
		MARK 9	2.85 – 2.90 (0.112 – 0.114)	
		MARK 10	2.95 – 3.00 (0.116 – 0.118)	
		MARK 11	3.05 – 3.10 (0.120 – 0.122)	
		MARK 12	3.15 – 3.20 (0.124 – 0.126)	
		MARK 13	3.25 – 3.30 (0.128 – 0.130)	↓
		MARK 14	3.35 – 3.40 (0.132 – 0.134)	Discoloration
	Clutch end plate thickness (2nd, 3rd, 4th)	MARK 1	2.05 – 2.10 (0.081 – 0.083)	Discoloration
		MARK 2	2.15 – 2.20 (0.085 – 0.087)	↑
		MARK 3	2.25 – 2.30 (0.089 – 0.091)	
		MARK 4	2.35 – 2.40 (0.093 – 0.094)	
		MARK 5	2.45 – 2.50 (0.096 – 0.098)	
		MARK 6	2.55 – 2.60 (0.100 – 0.102)	
		MARK 7	2.65 – 2.70 (0.104 – 0.106)	
		MARK 8	2.75 – 2.80 (0.108 – 0.110)	
		MARK 9	2.85 – 2.90 (0.112 – 0.114)	↓
		MARK 10	2.95 – 3.00 (0.116 – 0.118)	Discoloration
	Clutch end plate thickness (1st-hold)	MARK 1	2.05 – 2.10 (0.081 – 0.083)	Discoloration
		MARK 2	2.15 – 2.20 (0.085 – 0.087)	↑
		MARK 3	2.25 – 2.30 (0.089 – 0.091)	
		MARK 4	2.35 – 2.40 (0.093 – 0.094)	
		NO MARK	2.45 – 2.50 (0.096 – 0.098)	
		MARK 6	2.55 – 2.60 (0.100 – 0.102)	↓
		MARK 7	2.65 – 2.70 (0.104 – 0.106)	Discoloration

Automatic Transmission — Section 14

Unit of length: mm (in)

	MEASUREMENT	STANDARD (NEW)	SERVICE LIMIT
Transmission	Diameter of needle bearing contact area		
	On mainshaft and stator shaft	22.980 – 22.993 (0.9047 – 0.9052)	Wear or damage
	On mainshaft 2nd gear	35.975 – 35.991 (1.4163 – 1.4169)	↑
	On mainshaft 4th gear collar	31.975 – 31.991 (1.2589 – 1.2595)	
	On mainshaft 1st gear collar	30.975 – 30.991 (1.2195 – 1.2201)	
	On countershaft (left side)	36.004 – 36.017 (1.4175 – 1.4180)	
	On countershaft 3rd gear	35.980 – 35.996 (1.4165 – 1.4172)	
	On countershaft 4th gear	27.980 – 27.993 (1.1016 – 1.1021)	
	On countershaft reverse gear collar	31.975 – 31.991 (1.2589 – 1.2595)	
	On countershaft 1st gear collar	31.975 – 31.991 (1.2589 – 1.2595)	
	On sub-shaft (left side)	25.991 – 26.000 (1.0233 – 1.0236)	
	On sub-shaft 4th gear collar	27.980 – 27.993 (1.1016 – 1.1021)	↓
	On reverse idler gear shaft	13.990 – 14.000 (0.5508 – 0.5512)	Wear or damage
	Inside diameter of needle bearing contact area		
	On mainshaft 1st gear	35.000 – 35.016 (1.3780 – 1.3786)	Wear or damage
	On mainshaft 2nd gear	41.000 – 41.016 (1.6142 – 1.6148)	↑
	On mainshaft 4th gear	38.000 – 38.016 (1.4961 – 1.4967)	
	On countershaft 1st gear	38.000 – 38.016 (1.4961 – 1.4967)	
	On countershaft 3rd gear	41.000 – 41.016 (1.6142 – 1.6148)	
	On countershaft 4th gear	33.000 – 33.016 (1.2992 – 1.2998)	
	On countershaft reverse gear	38.000 – 38.016 (1.4961 – 1.4967)	
	On sub-shaft 4th gear	32.000 – 32.016 (1.2598 – 1.2605)	
	On reverse idler gear	18.007 – 18.020 (0.7089 – 0.7094)	
	On stator shaft (right side)	29.000 – 29.013 (1.1417 – 1.1422)	
	On stator shaft (stator side)	27.000 – 27.021 (1.0630 – 1.1638)	↓
	Reverse idler gear shaft holder I.D.	14.416 – 14.434 (0.5676 – 0.5683)	Wear or damage
	End play		
	Mainshaft 1st gear	0.08 – 0.24 (0.003 – 0.009)	——
	Mainshaft 2nd gear	0.05 – 0.13 (0.002 – 0.005)	——
	Mainshaft 4th gear	0.045 – 0.140 (0.002 – 0.006)	——
	Countershaft 1st gear	0.1 – 0.5 (0.004 – 0.020)	——
	Countershaft 3rd gear	0.04 – 0.15 (0.002 – 0.006)	——
	Countershaft 4th gear	0.05 – 0.13 (0.002 – 0.005)	——
	Sub-shaft 4th gear	0.05 – 0.17 (0.002 – 0.007)	——
	Reverse idler gear	0.05 – 0.18 (0.002 – 0.007)	——
	Countershaft reverse gear	0.10 – 0.25 (0.004 – 0.010)	——
	Selector hub O.D.	51.87 – 51.90 (2.042 – 2.043)	Wear or damage
	Mainshaft 4th gear collar length	49.00 – 49.05 (1.929 – 1.931)	——
	Mainshaft 1st gear collar length	27.00 – 27.15 (1.063 – 1.069)	——
	Mainshaft 1st gear collar flange thickness	2.5 – 2.6 (2.098 – 2.102)	Wear or damage
	Countershaft distance collar length	38.97 – 39.00 (1.534 – 1.535)	——
		39.02 – 39.05 (1.536 – 1.537)	——
		39.07 – 39.10 (1.538 – 1.539)	——
		39.12 – 39.15 (1.540 – 1.541)	——
		39.17 – 39.20 (1.542 – 1.543)	——
		39.22 – 39.25 (1.544 – 1.545)	——
		39.27 – 39.30 (1.546 – 1.547)	——
		38.87 – 38.90 (1.530 – 1.531)	——
		38.92 – 38.95 (1.532 – 1.533)	——
	Countershaft reverse gear collar length	14.5 – 14.6 (0.571 – 0.575)	——
	Countershaft reverse gear collar flange thickness	2.4 – 2.6 (0.094 – 0.102)	Wear or damage
	Countershaft 1st gear collar length	14.5 – 14.6 (0.571 – 0.575)	——
	Countershaft 1st gear collar flange thickness	2.4 – 2.6 (0.094 – 0.102)	Wear or damage
	Sub-shaft 4th gear collar length	24.0 – 24.1 (0.945 – 0.949)	Wear or damage
	Sub-shaft 4th gear collar flange thickness	3.00 – 3.15 (0.118 – 0.124)	Wear or damage

(cont'd)

Standards and Service Limits

Automatic Transmission (cont'd) — Section 14

	MEASUREMENT	STANDARD (NEW)	SERVICE LIMIT
Transmission (cont'd)	Mainshaft 2nd gear thrust washer thickness	3.97 – 4.00 (0.156 – 0.157)	Wear or damage
		4.02 – 4.05 (0.158 – 0.159)	↑
		4.07 – 4.10 (0.160 – 0.161)	
		4.12 – 4.15 (0.162 – 0.163)	
		4.17 – 4.20 (0.164 – 0.165)	
		4.22 – 4.25 (0.166 – 0.167)	
		4.27 – 4.30 (0.168 – 0.169)	
		4.32 – 4.35 (0.170 – 0.171)	
		4.37 – 4.40 (0.172 – 0.173)	↓ Wear or damage
	Thrust washer thickness		
	Mainshaft ball bearing left side	3.45 – 3.55 (0.136 – 0.140)	Wear or damage
	Mainshaft 1st gear left side	1.45 – 1.50 (0.057 – 0.059)	↕
	Mainshaft 1st gear right side	3.43 – 3.50 (0.135 – 0.138)	Wear or damage
	Sub-shaft 4th gear thrust washer thickness	2.93 – 3.00 (0.115 – 0.118)	Wear or damage
	One-way clutch contact area I.D.		↕
	Countershaft 1st gear	83.339 – 83.365 (3.2810 – 3.2821)	
	Parking gear	66.685 – 66.698 (2.6254 – 2.6259)	Wear or damage
	Mainshaft feed pipe A, O.D. (at 15 mm from end)	8.97 – 8.98 (0.353 – 0.354)	8.95 (0.352)
	Mainshaft feed pipe B, O.D. (at 30 mm from end)	5.97 – 5.98 (0.2350 – 0.2354)	5.95 (0.234)
	Countershaft feed pipe O.D. (at 15 mm from end)	7.97 – 7.98 (0.3138 – 0.3142)	7.95 (0.313)
	Sub-shaft feed pipe O.D. (at 15 mm from end)	7.97 – 7.98 (0.3138 – 0.3142)	7.95 (0.313)
	Mainshaft sealing ring thickness (29 mm and 35 mm)	1.980 – 1.995 (0.0780 – 0.0785)	1.80 (0.071)
	Mainshaft bushing I.D.	6.018 – 6.030 (0.2369 – 0.2374)	6.045 (0.2380)
	Mainshaft bushing I.D.	9.000 – 9.015 (0.3543 – 0.3549)	9.03 (0.356)
	Countershaft bushing I.D.	8.000 – 8.015 (0.3150 – 0.3156)	8.03 (0.316)
	Sub-shaft bushing I.D.	8.000 – 8.015 (0.3150 – 0.3156)	8.03 (0.316)
	Mainshaft sealing ring goove width	2.025 – 2.060 (0.0797 – 0.0811)	2.08 (0.082)
Regulator valve body	Sealing ring contact area I.D.	35.000 – 35.025 (1.3780 – 1.3782)	35.050 (1.3799)
Shifting device and parking brake control	Reverse shift fork finger thickness	5.90 – 6.00 (0.232 – 0.236)	5.40 (0.213)
	Parking brake ratchet pawl	———	Wear or other defect
	Parking gear	———	
	Throttle cam stopper height	27.0 – 27.1 (1.063 – 1.067)	———
Servo body	Shift fork shaft bore I.D.	14.000 – 14.010 (0.5512 – 0.5516)	———
	Shift fork shaft valve bore I.D.	37.000 – 37.039 (1.4567 – 1.4582)	37.045 (1:4585)
Oil pump	Oil pump gear side clearance	0.03 – 0.05 (0.001 – 0.002)	0.07 (0.003)
	Oil pump gear-to-body clearance Drive	0.210 – 0.265 (0.0083 – 0.0104)	———
	Driven	0.070 – 0.125 (0.0028 – 0.0049)	———
	Oil pump driven gear I.D.	14.016 – 14.034 (0.5518 – 0.5525)	Wear or damage
	Oil pump shaft O.D.	13.980 – 13.990 (0.5504 – 0.5508)	Wear or damage

Unit of length: mm (in)

Automatic Transmission — Section 14

	MEASUREMENT	STANDARD (NEW)			
		Wire Dia.	O.D.	Free Length	No. of Coils
Springs	Regulator valve spring A	1.8 (0.071)	14.7 (0.579)	88.6 (3.488)	16.5
	Regulator valve spring B	1.8 (0.071)	9.6 (0.378)	44.0 (1.732)	7.5
	Stator reaction spring	5.5 (0.217)	26.4 (1.039)	30.3 (1.193)	2.1
	Modulator valve body	1.3 (0.051)	9.4 (0.370)	37.3 (1.469)	12.4
	Torque converter check valve	1.1 (0.043)	8.4 (0.331)	33.8 (1.331)	12.5
	Cooler check valve spring	1.1 (0.043)	8.4 (0.331)	33.8 (1.331)	12.5
	Relief valve spring	1.1 (0.043)	8.6 (0.339)	37.1 (1.461)	13.4
	2-3 orifice control valve spring	0.9 (0.035)	6.6 (0.260)	33.0 (1.299)	14.9
	Throttle valve B adjusting spring	0.7 (0.028)	6.2 (0.244)	34.0 (1.339)	15.2
	Throttle valve B spring	1.4 (0.055)	8.5 (0.335)	41.5 (1.634)	10.5
	Throttle valve B spring	1.4 (0.055)	8.5 (0.335)	41.5 (1.634)	11.2
	Throttle valve B spring	1.4 (0.055)	8.5 (0.335)	41.6 (1.638)	12.4
	1-2 shift valve spring	0.9 (0.035)	8.6 (0.339)	40.4 (1.591)	14.5
	2-3 shift valve spring	0.9 (0.035)	7.6 (0.299)	57.0 (2.244)	26.8
	3-4 shift valve spring	0.9 (0.035)	7.6 (0.299)	52.0 (2.047)	26.8
	1st-hold accumulator spring	4.0 (0.157)	21.5 (0.846)	71.7 (2.823)	8.3
	1st accumulator spring	2.5 (0.098)	16.3 (0.642)	105.4 (4.150)	16 + 8.6
	2nd accumulator spring	3.6 (0.142)	22.0 (0.866)	108.9 (4.287)	15.2
	3rd accumulator spring	2.8 (0.110)	17.5 (0.689)	105.2 (4.142)	19.1
	4th accumulator spring	2.6 (0.102)	16.3 (0.642)	103.3 (4.067)	21.2
	Lock-up shift valve spring	0.9 (0.035)	7.6 (0.299)	73.7 (2.902)	32.0
	Lock-up timing B valve spring	0.8 (0.031)	6.6 (0.260)	60.8 (2.394)	22.1
	Lock-up control valve spring	0.8 (0.031)	6.6 (0.260)	39.5 (1.555)	25.0
	CPC valve spring	1.3 (0.051)	9.4 (0.370)	35.3 (1.390)	12.4
	Kick-down valve spring	1.0 (0.039)	6.6 (0.260)	28.5 (1.122)	14.7
	3-2 kick-down valve spring	1.3 (0.051)	8.6 (0.339)	45.6 (1.795)	17.0
	Servo control valve spring	0.9 (0.035)	6.4 (0.252)	34.1 (1.343)	17.5
	4th exhaust valve spring	1.0 (0.039)	7.1 (0.280)	60.3 (2.374)	18.5
	Servo orifice control valve spring	0.8 (0.031)	6.6 (0.260)	48.2 (1.898)	33.0

Standards and Service Limits

Differential (Manual transmission) — Section 15

	MEASUREMENT		STANDARD (NEW)	SERVICE LIMIT
Differential carrier	Pinion shaft contact area I.D.	B18B1 engine	18.000 – 18.016 (0.7087 – 0.7093)	———
		B18C1 engine	18.000 – 18.018 (0.7087 – 0.7094)	———
	Carrier-to-pinion clearance	B18B1 engine	0.013 – 0.045 (0.0005 – 0.0018)	0.1 (0.004)
		B18C1 engine	0.013 – 0.047 (0.0005 – 0.0019)	0.1 (0.004)
	Driveshaft/intermediate shaft contact area I.D.			
		B18B1 engine	28.000 – 28.021 (1.1024 – 1.1032)	———
		B18C1 engine	28.005 – 28.025 (1.1026 – 1.1033)	———
	Carrier-to-driveshaft clearance	B18B1 engine	0.020 – 0.062 (0.0008 – 0.0024)	———
		B18C1 engine	0.045 – 0.086 (0.0018 – 0.0034)	———
	Carrier-to-intermediate shaft clearance			
		B18B1 engine	0.050 – 0.087 (0.0020 – 0.0034)	———
		B18C1 engine	0.075 – 0.111 (0.0030 – 0.0044)	———
Differential pinion gear	Backlash		0.05 – 0.15 (0.002 – 0.006)	Adjust
	I.D.		18.042 – 18.066 (0.7103 – 0.7113)	———
	Pinion gear-to-pinion shaft clearance		0.055 – 0.095 (0.0022 – 0.0037)	0.15 (0.006)
Set ring-to-bearing outer race clearance		B18B1 engine	0 – 0.10 (0 – 0.004)	Adjust
Differential taper roller bearing preload Starting torque N·m (kgf·cm, lbf·in)		B18C1 engine	2.11 – 3.04 (21.5 – 31.0, 13.0 – 18.7)	Adjust

Differential (Automatic transmission) — Section 15

	MEASUREMENT	STANDARD (NEW)	SERVICE LIMIT
Differential carrier	Pinion shaft contact area I.D.	18.000 – 18.018 (0.7087 – 0.7094)	———
	Carrier-to-pinion clearance	0.016 – 0.052 (0.0006 – 0.0020)	0.1 (0.004)
	Driveshaft/intermediate shaft contact are I.D.	28.005 – 28.025 (1.1026 – 1.1033)	———
	Carrier-to-driveshaft clearance	0.025 – 0.066 (0.0010 – 0.0026)	0.12 (0.005)
Differential pinion gear	Backlash	0.05 – 0.15 (0.002 – 0.006)	Adjust
	I.D.	18.042 – 18.066 (0.7103 – 0.7113)	———
	Pinion gear-to-pinion shaft clearance	0.059 – 0.095 (0.0023 – 0.0037)	0.15 (0.006)
Set ring-to-bearing outer race clearance		0 – 0.15 (0 – 0.006)	Adjust

Steering — Section 17

	MEASUREMENT		STANDARD (NEW)
Steering wheel	Rotational play at steering wheel circumference		0 – 10 (0 – 0.39)
	Starting load at steering wheel circumference N (kgf, lbf)	Engine running	34 (3.5, 7.7)
Gearbox	Angle of rack-guide-screw loosened from locked position		20° ± 5°
Pump	Pump pressure with shut-off valve closed kPa (kgf/cm², psi)		6,400 – 7,400 (65 – 75, 920 – 1,100)
Power steering fluid	Recommended fluid		Honda power steering fluid-V
	Fluid capacity ℓ (US qt, Imp qt)	For overhaul	1.06 (1.12, 0.98)
		For fluid change	0.79 (0.83, 0.70)
Power steering belt*	Deflection with 98 N (10 kgf, 22 lbf) between pulleys		11.5 – 13.5 (0.45 – 0.53) with used belt 8.0 – 10.0 (0.31 – 0.39) with new belt
	Belt tension N (kgf, lbf) Measured with belt tension gauge		390 – 540 (40 – 55, 88 – 120) with used belt 740 – 880 (75 – 90, 170 – 200) with new belt

* When using a new belt, adjust deflection or tension to new values. Run the engine for 5 minutes then turn it off. Readjust deflection or tension to used belt values.

Unit of length: mm (in)

Suspension — Section 18

	MEASUREMENT		STANDARD (NEW)
Wheel alignment	Camber	Front	$-0° 10' \pm 1°$
		Rear	$-0° 45' {}^{+0°45'}_{-1°15'}$
	Caster	Front	$1° 10' \pm 1°$
	Total toe	Front	0 ± 2 (0 ± 0.08)
		Rear	IN 3^{+2}_{-1} ($0.12^{+0.08}_{-0.04}$)
	Front wheel turning angle	Inward wheel	$36° 00' \pm 2°$
		Outward wheel	$30° 30'$
Wheel bearing	End play	Front	0 – 0.05 (0 – 0.002)
		Rear	0 – 0.05 (0 – 0.002)

			STANDARD (NEW)	SERVICE LIMIT
Wheel	Rim runout (Aluminum wheel)	Axial	0 – 0.7 (0 – 0.03)	2.0 (0.08)
		Radial	0 – 0.7 (0 – 0.03)	1.5 (0.06)
	Rim runout (Steel wheel)	Axial	0 – 1.0 (0 – 0.04)	2.0 (0.08)
		Radial	0 – 1.0 (0 – 0.04)	1.5 (0.06)

Brake — Section 19

	MEASUREMENT		STANDARD (NEW)
Parking brake lever	Play in stroke at 200 N (20 kgf, 44 lbf) lever force		To be locked when pulled 6 –10 notches
Foot brake pedal	Pedal height (With floor mat removed)	M/T	160 (6.30)
		A/T	165 (6.50)
	Free play		1 – 5 (0.04 – 0.20)
Master cylinder	Piston-to-pushrod clearance		0 – 0.4 (0 – 0.2)

			STANDARD (NEW)	SERVICE LIMIT
Disc brake	Disc thickness	Front	20.9 – 21.1 (0.82 – 0.83)	19.0 (0.75)
		Rear	8.9 – 9.1 (0.35 – 0.36)	8.0 (0.31)
	Disc runout	Front	———	0.10 (0.004)
		Rear	———	0.10 (0.004)
	Disc parallelism	Front and rear	———	0.015 (0.0006)
	Pad thickness	Front	9.5 – 10.5 (0.37 – 0.41)	1.6 (0.06)
		Rear	7.0 – 8.0 (0.27 – 0.31)	1.6 (0.06)

Air Conditioning — Section 22

	MEASUREMENT		STANDARD (NEW)
Air conditioning system	Lubricant capacity mℓ (fl oz)	Condenser	25 (5/6)
		Evaporator	40 (1 1/3)
		Line or hose	10 (1/3)
		Receiver	10 (1/3)
	Lubricant type: ND-OIL8 (P/N 38899 – PR7 – A01)		
Compressor	Lubricant capacity mℓ (fl oz)		140^{+15}_{0} ($4\text{-}2/3^{+1/2}_{0}$)
	Lubricant type: ND-OIL8 (P/N 38899 – PR7 – A01)		
	Stator coil resistance at 68°F (20°C) Ω		3.4 – 3.8
	Pulley-to-pressure plate clearance		0.5 ± 0.15 (0.02 ± 0.006)
Compressor belt*1	Deflection with 98 N (10 kgf, 22 lbf) between pulleys		7.5 – 9.5 (0.30 – 0.37) with used belt*2 8.5 – 10.5 (0.33 – 0.41) with used belt*3 5.0 – 7.0 (0.20 – 0.28) with new belt
	Belt tension N (kgf, lbf) Measured with belt tension gauge		390 – 540 (40 – 55, 88 – 120) with used belt*2 340 – 490 (35 – 50, 77 – 110) with used belt*3 740 – 880 (75 – 90, 170 – 200) with new belt

*1: When using a new belt, adjust deflection or tension to new values. Run the engine for 5 minutes then turn it off. Readjust deflection or tension to used belt values.
*2: B18B1 engine
*3: B18C1 engine

Standards and Service Limits

Electrical — Section 23

	MEASUREMENT	STANDARD (NEW)	
Ignition coil	Rated voltage V	12	
	Primary winding resistance at 68°F (20°C) Ω	0.6 – 0.8	
	Secondary winding resistance at 68°F (20°C) kΩ	12.8 – 19.2	
Ignition wire	Resistance at 68°F (20°C) kΩ	25 max.	
		STANDARD (NEW)	**SERVICE LIMIT**
Spark plug	Type	See Section 23	———
	Gap B18B1 engine	1.0 – 1.1 (0.039 – 0.043)	———
	Gap B18C1 engine	———	1.3 (0.051)*1
Ignition timing	At idling M/T	16° ± 2° –750 ± 50 (Neutral)	
	° BTDC (Red) – rpm A/T	16° ± 2° –750 ± 50 (N or P position)	
Alternator belt*2	Deflection with 98 N (10 kgf, 22 lbf) between pulleys	9.0 – 11.0 (0.35 – 0.43) with used belt 6.0 – 8.0 (0.24 – 0.31) with new belt	
	Belt tension N (kgf, lbf) Measured with belt tension gauge	340 – 490 (35 – 50, 77 – 110) with used belt 690 – 880 (70 – 90, 154 – 198) with new belt	
		STANDARD (NEW)	**SERVICE LIMIT**
Alternator	Output 13.5 V at hot A	90	———
	Coil resistance (rotor) at 68°F (20°C) Ω	2.9	———
	Slip ring O.D.	14.4 (0.57)	14.0 (0.55)
	Brush length	10.5 (0.41)	1.5 (0.06)
	Brush spring tension N (kgf, lbf)	3.2 (0.33, 0.73)	———
Starter	Output	1.4 kW	———
	Mica depth	0.5 – 0.8 (0.02 – 0.03)	0.2 (0.008)
	Commutator runout	0 – 0.02 (0 – 0.0008)	0.05 (0.002)
	Commutator O.D.	29.9 – 30.0 (1.177 – 1.181)	29.0 (1.142)
	Brush length	15.0 – 15.5 (0.59 – 0.61)	10.0 (0.39)
	Brush spring tension (new) N (kgf, lbf)	17.7 – 23.5 (1.8 – 2.4, 4.0 – 5.3)	———

*1: Do not adjust the gap, replace spark plug if it is out of spec.
*2: When using a new belt, adjust deflection or tension to new values. Run the engine for 5 minutes then turn it off. Readjust deflection or tension to used belt values.

Design Specifications

	ITEM		METRIC	ENGLISH	NOTES
DIMENSIONS	Overall Length	3 DOOR	4,380 mm	172.4 in	
		4 DOOR	4,525 mm	178.1 in	
	Overall Width		1,710 mm	67.3 in	
	Overall Height	3 DOOR	1,335 mm	52.6 in	
		4 DOOR	1,370 mm	53.9 in	
	Wheelbase	3 DOOR	2,570 mm	101.2 in	
		4 DOOR	2,620 mm	103.1 in	
	Track F/R		1,475/1,470 mm	58.1/57.9 in	
	Ground Clearance		150 mm	5.9 in	
	Seating Capacity		Four (3 DOOR), Five (4 DOOR)		
Weight (USA)	Gross Vehicle Weight Rating (GVWR)		——	3,680 lbs	
Weight (CANADA)	Gross Vehicle Weight Rating (GVWR)		1,670 kg	——	
ENGINE	Type	B18B1 engine	Water-cooled, 4-stroke DOHC gasoline engine		
		B18C1 engine	Water-cooled, 4-stroke DOHC VTEC gasoline engine		
	Cylinder Arrangement		Inline 4-cylinder, transverse		
	Bore and Stroke	B18B1 engine	81.0 x 89.0 mm	3.19 x 3.50 in	
		B18C1 engine	81.0 x 87.2 mm	3.19 x 3.43 in	
	Displacement	B18B1 engine	1,834 cm³ (mℓ)	112 cu-in	
		B18C1 engine	1,797 cm³ (mℓ)	110 cu-in	
	Compression Ratio	B18B1 engine	9.2 : 1		
		B18C1 engine	10.0 : 1		
	Valve Train	B18B1 engine	Belt driven, DOHC 4 valve per cylinder		
		B18C1 engine	Belt driven, DOHC VTEC 4 valve per cylinder		
	Lubrication System		Forced and wet sump, trochoid pump		
	Oil Pump Displacement	B18B1 engine	50 ℓ (53 US qt, 44 Imp qt)/minute*1		
		B18C1 engine	71 ℓ (75 US qt, 62 Imp qt)/minute*2		
	Water Pump Displacement	B18B1 engine	140 ℓ (148 US qt, 123 Imp qt)/minute*1		
		B18C1 engine	140 ℓ (148 US qt, 123 Imp qt)/minute*2		
	Fuel Required	B18B1 engine	UNLEADED gasoline with 86 Pump Octane Number or higher		
		B18C1 engine	Premium UNLEADED gasoline with 91 Pump Octane Number or higher		
STARTER	Type		Gear reduction		
	Normal Output		1.4 kW		
	Nominal Voltage		12 V		
	Hour Rating		30 seconds		
	Direction of Rotation		Clockwise as viewed from gear end		
	Weight		3.7 kg	8.3 lbs	
CLUTCH	Clutch Type	M/T	Single plate dry, diaphragm spring		
		A/T	Torque converter		
	Clutch Facing Area	M/T	203 cm²	31 sq-in	
TRANSMISSION	Transmission Type	M/T	Synchronized 5-speed forward, 1 reverse		
		A/T	Electronically controlled 4-speed automatic, 1 reverse		
	Primary Reduction		Direct 1 : 1		

*1: At 6,000 engine rpm
*2: At 7,600 engine rpm

(cont'd)

Design Specifications

(cont'd)

	ITEM		METRIC	ENGLISH	NOTES
TRANSMISSION	Type		Manual transmission		
		Engine type	B18B1	B18C1	
	Gear Ratio	1st	3.230	3.230	
		2nd	1.900	1.900	
		3rd	1.269	1.360	
		4th	0.966	1.034	
		5th	0.714	0.787	
		Reverse	3.000	3.000	
	Final Reduction	Gear type	Single helical gear		
		Gear ratio	4.266	4.400	
	Type		Automatic transmission		
	Gear Ratio	1st	2.722		
		2nd	1.468		
		3rd	0.975		
		4th	0.638		
		Reverse	1.954		
	Final Reduction	Gear type	Single helical gear		
		Gear ratio	4.357		
AIR CONDITIONING	Cooling Capacity		3,570 Kcal/h	14,166 BTU/h	
	Compressor	Type/Make	Swash-plate/NIPPONDENSO		
		No. of Cylinder	10		
		Capacity	150 mℓ/rev	9.15 cu-in/rev	
		Max. Speed	7,600 rpm		
		Lubricant Capacity	140 mℓ	4-2/3 fl oz 4.73 Imp oz	
		Lubricant Type	ND-OIL8 (P/N 38899 – PR7 – A01)		
	Condenser	Type	Corrugated fin		
	Evaporator	Type	Corrugated fin		
	Blower	Type	Sirocco fan		
		Motor Input	200 W/12 V		
		Speed Control	4-speed		
		Max. Capacity	450 m³/h	15,900 cu ft/h	
	Temperature Control		Air-mix type		
	Compressor Clutch	Type	Dry, single plate, poly-V-belt drive		
		Power Consumption	40 W max./12 V at 68°F (20°C)		
	Refrigerant	Type	HFC-134a (R-134a)		
		Quantity	700^{0}_{-50} g	$24.7^{0}_{-1.8}$ oz	
STEERING SYSTEM	Type		Power assisted, rack and pinion		
	Overall Ratio		16.1		
	Turns, Lock-to-Lock		2.98		
	Steering Wheel Dia.		380 mm	15.0 in	
SUSPENSION	Type	Front	Independent double wishbone, coil spring with stabilizer		
		Rear	Independent double wishbone, coil spring with stabilizer		
	Shock Absorber, Front and Rear		Telescopic, hydraulic nitrogen gas-filled		

	ITEM		METRIC	ENGLISH	NOTES
WHEEL ALIGNMENT	Camber	Front	−0°10′		
		Rear	−0°45′		
	Caster	Front	1°10′		
	Total Toe	Front	0 mm	0 in	
		Rear	In 2 mm	In 0.08 in	
BRAKE SYSTEM	Type	Front	Power-assisted self-adjusting ventilated disc		
		Rear	Power-assisted self-adjusting solid disc		
	Pad Surface Area	Front	50.0 cm² x 2	7.75 sq in x 2	
		Rear	21.0 cm² x 2	3.26 sq in x 2	
	Parking Brake	Type	Mechanical actuating, rear two wheel brakes		
TIRE	Size	Front and rear	P195/60R14 85H*1 P195/55R15 84V*2		
		Spare Tire	T115/70D14*3 T135/70D15*4		
ELECTRICAL	Battery		12 V – 36 AH/5 HR		
	Starter		12 V – 1.4 kW		
	Alternator		12 V – 90 A		
	Fuses				
	In Under-dash Fuse/Relay Box		7.5 A, 10 A, 15 A, 20 A, 30 A		
	In Under-hood Fuse/Relay Box		7.5 A, 10 A, 15 A, 20 A, 30 A, 40 A 50 A, 100 A		
	In Under-hood ABS Fuse/Relay Box		10 A, 15 A, 20 A, 40 A		
	Headlights	High	12 V – 65 W (HB3)		
		Low	12 V – 55 W (HB4)		
	Front Side Marker Lights		12 V – 3 CP		SAE 168
	Front Turn Signal/Parking Lights		12 V – 32/3 CP		SAE 1157
	Rear Turn Signal Lights		12 V – 32 CP		SAE 1156
	Stop/Taillights		12 V – 32/3 CP		SAE 1157
	High Mount Brake Light*5		12 V – 21 W		SAE 7440
	Rear Side Marker Lights		12 V – 3 CP		SAE 168
	Back-up Lights		12 V – 32 CP		SAE 1156
	License Plate Lights		12 V – 8 W		
	Ceiling Lights		12 V – 5 W		
	Cargo Area Lights (3 DOOR)		12 V – 3.4 W		
	Trunk Lights (4 DOOR)		12 V – 3.4 W		
	Spotlights		12 V – 5 W		
	Glove Box Light		12 V – 3.4 W		
	Gauge Lights		12 V – 3.4 W		
	Indicator Lights		12 V – 0.84 W, 0.91 W, 1.12 W, 1.4 W, 3 W		
	Illumination and Pilot Lights		12 V – 0.84 W, 0.91 W, 1.4 W, LED		
	Heater Illumination Lights		12 V – 1.4 W		

*1: RS, LS
*2: GS-R
*3: RS
*4: LS, GS-R
*5: Except high mount brake light installed in rear spoiler.

Body Specifications

3 DOOR:

Unit: mm (in)

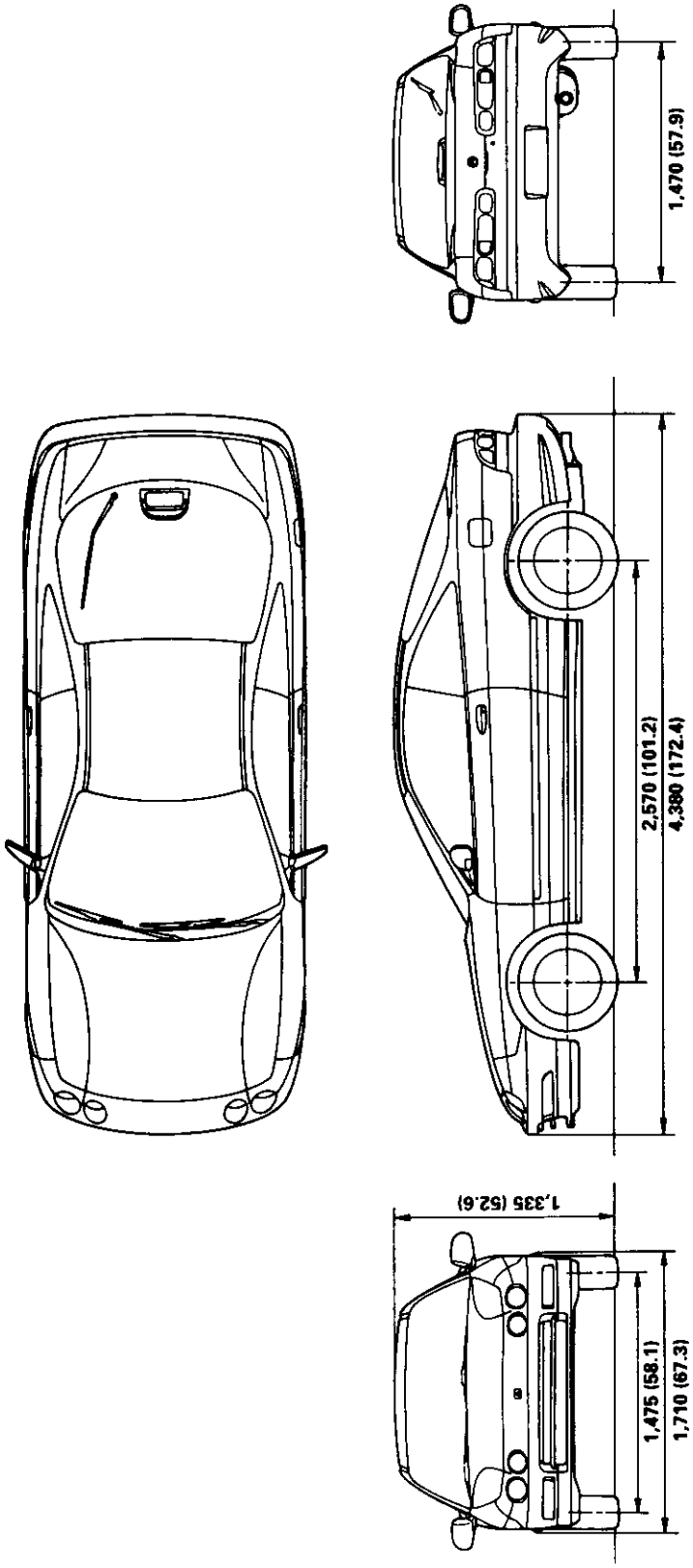

4 DOOR:

Unit: mm (in)

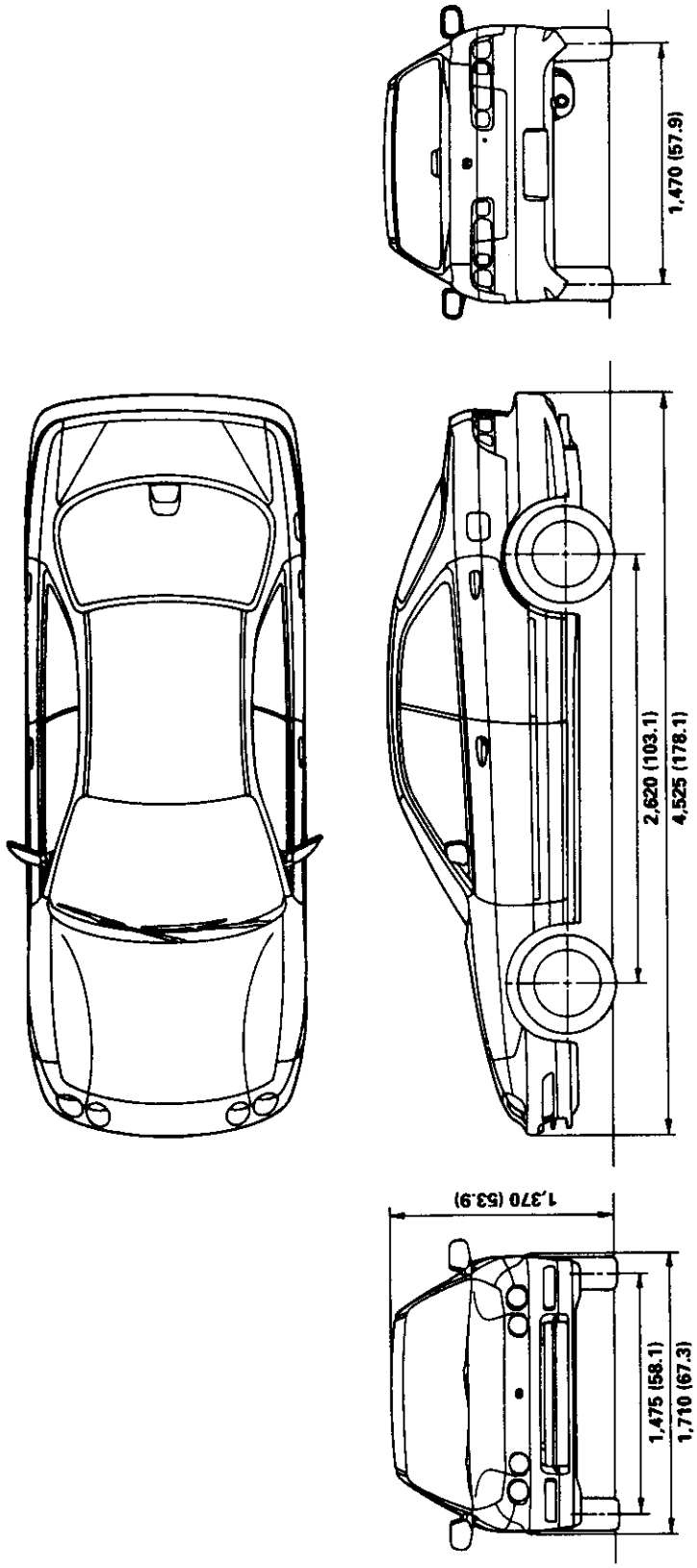

Maintenance

Lubrication Points 4-2
Maintenance Schedule 4-4

Lubrication Points

For the details of lubrication points and type of lubricants to be applied, refer to the illustrated index and various work procedure (such as Assembly/Reassembly, Replacement, Overhaul, Installation, etc.) contained in each section.

No.	LUBRICATION POINTS	LUBRICANT
1	Engine	API Service Grade: Use SG or SH "Energy Conserving II" grade oil. The oil container may also display the API Certification seal shown below. Make sure it says "For Gasoline Engines." SAE Viscosity: See chart below.
2	Transmission Manual Automatic	API Service Grades: SF or SG SAE Viscosity: 10 W–30 or 10 W–40 Honda Premium Formula or DEXRON® II Automatic transmission fluid
3	Brake line (Includes Anti-lock brake line)	Brake fluid DOT3 or DOT4
4	Clutch line	Brake fluid DOT3 or DOT4
5	Power steering gearbox	Steering grease P/N 08733–B070E
6	Release fork (Manual transmission)	Super High Temp Urea Grease (P/N 08798–9002)
7 8	Throttle wire end (Dashboard lower panel hole) Cruise control actuator wire end (Dashboard lower panel hole)	Silicone grease
9 10 11 12 13 14 15 16 17 18	Throttle cable end (Throttle link) Cruise control actuator cable end (Actuator link) Brake master cylinder pushrod Clutch master cylinder pushrod Engine hood hinges and engine hood latch Battery terminals Fuel fill lid Hatch hinges or trunk hinges Door hinges, upper and lower Door open detent	Multi-purpose grease
19	Rear brake calipers	Rust-preventive agent
20	Power steering system	Honda power steering fluid-V
21	Air conditioning compressor	Refrigerant oil ND-OIL8 (P/N 38899–PR7–A01) (For Refrigerant: HFC-134a (R-134a))

API CERTIFICATION SEAL

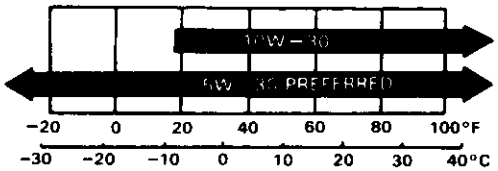

Recommended engine oil
Engine oil viscosity for ambient temperature ranges

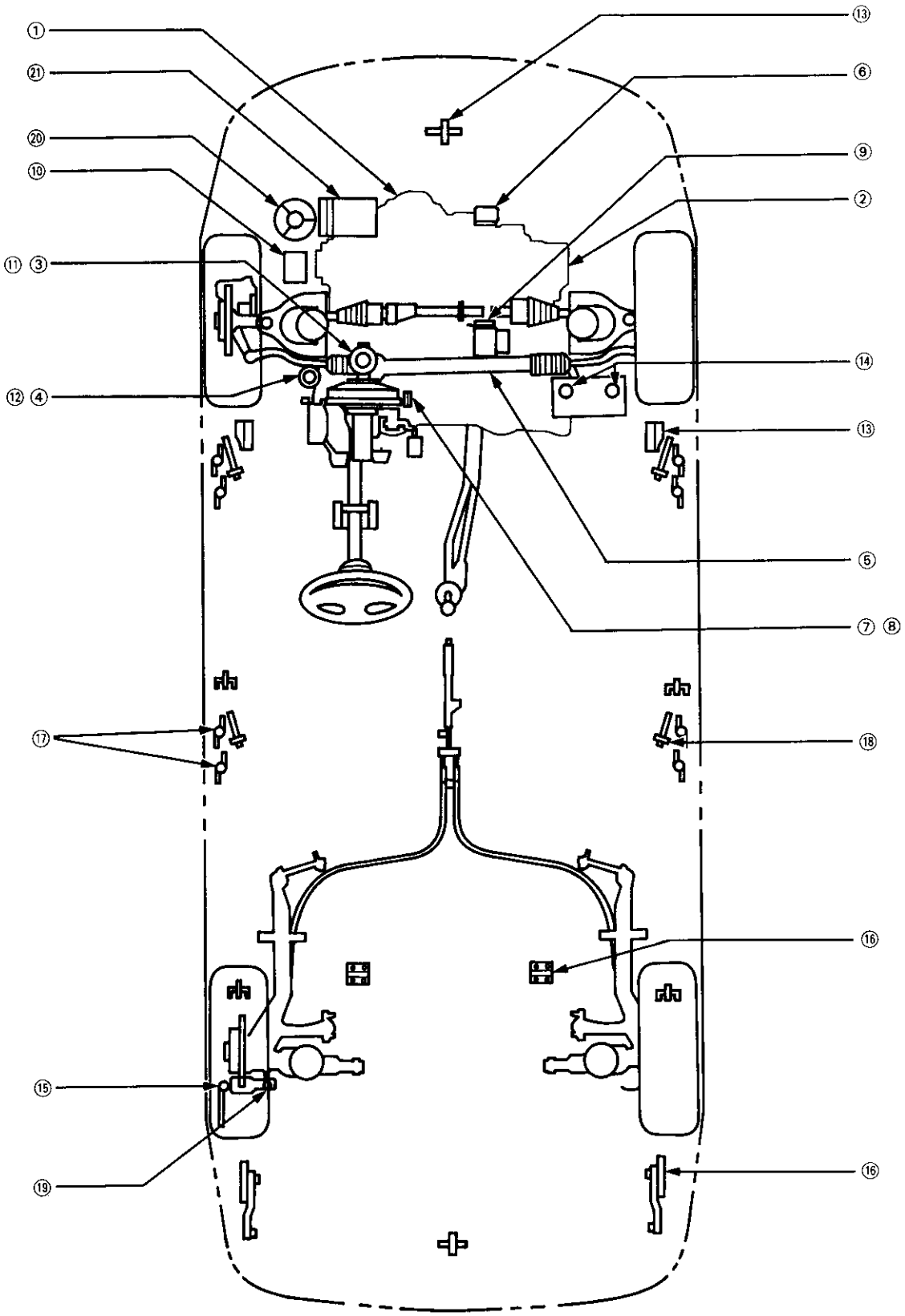
①
㉑
⑳
⑩
⑪ ③
⑫ ④
⑬
⑥
⑨
②
⑭
⑬
⑤
⑦ ⑧
⑰
⑱
⑯
⑮
⑲
⑯

R—Replace I—Inspect: After inspection, clean, adjust, or replace if necessary.

Service at the interval listed x 1,000 miles (or km) or after that number of months, whichever comes first.																NOTE	SEC and PAGE
	x 1,000 miles	7.5	15	22.5	30	37.5	45	52.5	60	67.5	75	82.5	90	97.5	105		
	x 1,000 km	12	24	36	48	60	72	84	96	108	120	132	144	156	168		
Maintenance Item	months	6	12	18	24	30	36	42	48	54	60	66	72	78	84		
Engine and Transmission																	
□ Air cleaner element					R				R				R				11-117
Idle speed									I*1							Manual transmission : 750 ± 50 rpm Automatic transmission: 750 ± 50 rpm (in N or P position)	11-95
Positive crankcase ventilation valve									I							If clicking sound is heard as you pinch the hose between the PCV valve and intake manifold, valve is OK.	11-134
Valve clearance (cold)			I		I		I		I		I		I		I	Intake : 0.08—0.12 mm (0.003—0.005 in) *5 Exhaust: 0.16—0.20 mm (0.006—0.008 in) *5 Intake : 0.15—0.19 mm (0.006—0.007 in) *6 Exhaust: 0.17—0.21 mm (0.007—0.008 in) *6 Measured when cold.	6-4 6-44
Fuel filter									R*1							The rubber fuel hoses need periodic replacement since they are subject to cracks and deterioration during long periods of use.	11-108
Fuel pipes, hoses and connections					I*1				I*1				I*1			Check fuel lines for loose connections, cracks and deterioration. Retighten loose connections and replace any damaged parts.	11-98
Spark plugs	B18B1 engine (LS, RS)				R				R				R			NGK: ZFR5F-11 *5, NIPPONDENSO: KJ16CR-L11 *5 NGK: PFR6G-13 *6, NIPPONDENSO: PK20PR-L13 *6 Gap: 1.0—1.1 mm (0.039—0.043 in) *5 1.2—1.3 mm (0.047—0.051 in) *6, *7	23-97
	B18C1 engine (GS-R)								R*2								
Distributor ignition cap and rotor									I*1								23-91
Ignition wires									I							Maximum resistance 25,000 ohms	23-94
■ Engine oil		R	R	R	R	R	R	R	R	R	R	R	R	R	R	Capacity for change with filter: 3.8 ℓ (4.0 US qt, 3.3 Imp qt) *5 4.0 ℓ (4.2 US qt, 3.5 Imp qt) *6	8-5
■ Engine oil filter		R	R	R	R	R	R	R	R	R	R	R	R	R	R		8-6
Alternator drive belt					I				I				I			9.0—11.0 mm (0.35—0.43 in) at 98 N (10 kgf, 22 lbf) tension	23-108

•: Check oil and coolant level at each fuel stop.
□: Under severe driving conditions, service these items more often.

*1: For cars sold in California, this service is recommended only: other areas, it is required.
*2: Replace every 6 years or 60,000 miles (96,000 km), whichever comes first.
*5: B18B1 engine (LS, RS)
*6: B18C1 engine (GS-R)
*7: Do not adjust the gap, replace the spark plug if it is out of standard gap.

R—Replace I—Inspect: After inspection, clean, adjust, or replace if necessary.

Service at the interval listed x 1,000 miles (or km) or after that number of months, whichever comes first.																NOTE	SEC and PAGE
	x 1,000 miles	7.5	15	22.5	30	37.5	45	52.5	60	67.5	75	82.5	90	97.5	105		
	x 1,000 km	12	24	36	48	60	72	84	96	108	120	132	144	156	168		
Maintenance Item	months	6	12	18	24	30	36	42	48	54	60	66	72	78	84		
Engine and Transmission																	
Cooling system hoses and connections					I*1				I*1				I*1				10-2
• Engine coolant							R				R				R*3	Capacity for change: Manual transmission: 4.4 ℓ (4.6 US qt, 3.9 Imp qt) *5 4.7 ℓ (5.0 US qt, 4.1 Imp qt) *6 Automatic transmission: 4.7 ℓ (5.0 US qt, 4.1 Imp qt) *5 Check specific gravity for freezing point.	10-5
Timing belt													R*4				6-10 *5 6-49 *6
Water pump													I				10-9
Three way catalytic converter heat shield									I							Check condition and tightness	11-132
Exhaust pipe (before catalytic converter)				I*1				I*1				I*1				Check condition and tightness	9-5
Exhaust pipe and muffler (after catalytic converter)		I		I		I		I		I		I		I		Check condition and tightness	9-5
☐ Manual Transmission oil				R				R				R				2.2 ℓ (2.3 US qt, 1.9 Imp qt) for change	13-3
☐ Automatic transmission fluid				R				R				R				2.7 ℓ (2.9 US qt, 2.4 Imp qt) for change HONDA Premium Formula ATF or DEXRON® II ATF	14-93
Brakes																	
Front brake pad		I	I	I	I	I	I	I	I	I	I	I	I	I	I	Min. thickness: 1.6 mm (0.06 in)	19-7
☐ Front brake discs and calipers		I		I		I		I		I		I		I		Min. thickness: 19 mm (0.75 in)	19-9, 10
☐ Rear brake discs, calipers and pads		I		I		I		I		I		I		I		Min. thickness: Discs 8.0 mm (0.31 in) : Pads 1.6 mm (0.06 in)	19-16, 19 20
Brake hoses and lines		I		I		I		I		I		I		I		Check for leaks, damage, interference or twisting.	19-27
Parking brake		I		I				I				I				Fully engaged 6 to 10 clicks.	19-5

•: Check oil and coolant level at each fuel stop.
☐: Under severe driving conditions, service these items more often.

*1: For cars sold in California, this service is recommended only: other areas, it is required.
*3: Thereafter, replace every 2 years or 30,000 miles (48,000 km), whichever comes first.
*4: This service is recommended only.
*5: B18B1 engine (LS, RS)
*6: B18C1 engine (GS-R)

R—Replace I—Inspect: After inspection, clean, adjust, or replace if necessary.

Service at the interval listed x 1,000 miles (or km) or after that number of months, whichever comes first.																NOTE	SEC and PAGE
	x 1,000 miles	7.5	15	22.5	30	37.5	45	52.5	60	67.5	75	82.5	90	97.5	105		
	x 1,000 km	12	24	36	48	60	72	84	96	108	120	132	144	156	168		
Maintenance Item	months	6	12	18	24	30	36	42	48	54	60	66	72	78	84		
Brakes																	
Brake fluid (including Anti-lock brake system *7)					R				R				R			Use only DOT3 or DOT4 fluid. Check that brake fluid level is between the upper and lower marks on the reservoir.	19-6
Anti-lock brake system operation *7					I				I				I			Function test Wheel sensor signal confirmation Anti-lock brake system indicator light	19-151
Steering, Suspension, Miscellaneous																	
Front wheel alignment			I		I		I		I		I		I		I		18-4
Steering operation, tie rod ends, steering gearbox and boots			I		I				I				I			Check rack grease and steering linkage. Check the boot for damage or leaking grease.	17-19
Power steering system			[I]		[I]		[I]		[I]		[I]		[I]		[I]		17-23
Power steering pump belt					I				I				I			11.5—13.5 mm (0.45—0.53 in) at 98 N (10 kgf, 22 lbf) tension	17-20
Suspension mounting			I		I		I		I		I		I		I	Check tightness of bolts.	18-8, 26
Supplemental restraint system		Inspect system 10 years after production															—

*7: For cars with Anti-lock brake system (LS and GS-R).

Severe Driving Conditions
Items marked [R] or [I] in the chart indicate you will need some services more frequently in certain severe driving conditions.

The conditions are:
A: Driving less than 5 miles (8 km) per trip, or, in freezing temperatures, driving less than 10 miles (16 km) per trip.
B: Driving on rough or muddy roads, or de-iced roads.
C: Driving in extremely dusty conditions.
D: Extensive idling or driving long periods at slow speeds, such as a delivery vehicle.
E: Towing a trailer.

Services for Severe Driving Conditions
—Clean the air cleaner element every 15,000 miles (24,000 km) or 12 months and replace every 30,000 miles (48,000 km) or 24 months under conditions B or C.
—Replace engine oil and oil filter every 3,750 miles (6,000 km) or 3 months under conditions A, B, C, D or E.
—Replace transmission oil every 15,000 miles (24,000 km) or 12 months under conditions D or E.
—Inspect front brake discs and calipers, and rear brake discs, calipers and pads every 7,500 miles (12,000 km) or 6 months under conditions B, C, D or E.
—Inspect the power steering system every 7,500 miles (12,000 km) or 6 months under conditions A, B, or C.

Engine

Engine Removal/Installation 5-1
Cylinder Head/Valve Train 6-1
Engine Block 7-1
Engine Lubrication 8-1
Intake Manifold/Exhaust System 9-1
Cooling 10-1

Engine Removal/Installation

Special Tools 5-2
Engine Removal/Installation 5-3
Mount/Bracket Torque 5-16

Special Tools

Ref. No.	Tool Number	Description	Qty	Page Reference
①	07MAC–SL00200	Ball Joint Remover, 28 mm	1	5-9

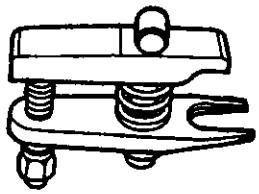

①

⚠ WARNING

- **Make sure jacks and safety stands are placed properly and hoist brackets are attached to the correct positions on the engine (see section 1).**
- **Make sure the car will not roll off stands and fall while you are working under it.**

CAUTION:

- **Use fender covers to avoid damaging painted surfaces.**
- **Unspecified items are common.**
- **Unplug the wiring connectors carefully while holding the coupler and the connector portion to avoid damage.**
- **Mark all wiring and hoses to avoid misconnection. Also, be sure that they do not contact other wiring or hoses, or interfere with other parts.**

NOTE: Anti-theft radios have a coded theft protection circuit. Be sure to get the customer's code number before
– Disconnecting the battery.
– Removing the No. 32 (7.5 A) fuse from the under-hood fuse/relay box.
– Removing the radio
After service, reconnect power to the radio and turn it on. When the word "CODE" is displayed, enter the customer's 5-digit code to restore radio operation.

1. Remove the hood (see section 20).

2. Remove the strut brace.

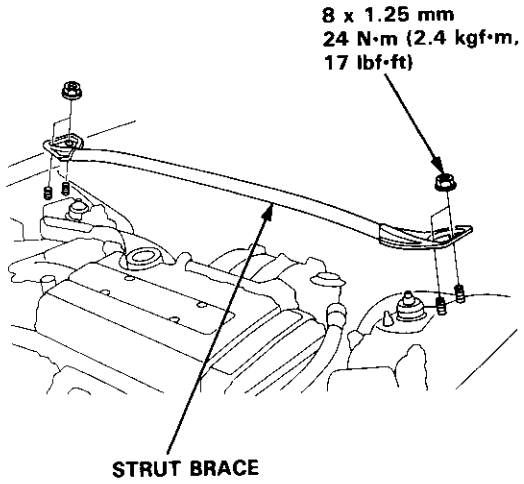

3. Disconnect the battery negative terminal first, then the positive terminal.

4. Disconnect the battery cables from the under-hood fuse/relay box and under-hood ABS fuse/relay box.

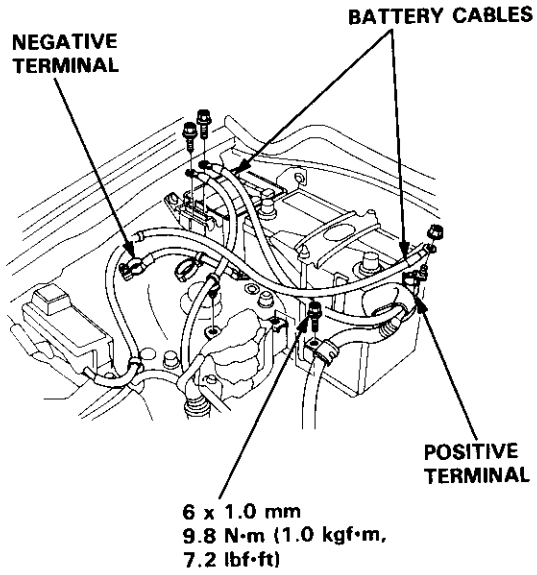

(cont'd)

5. Remove the intake air duct, air cleaner housing assembly and the bracket.

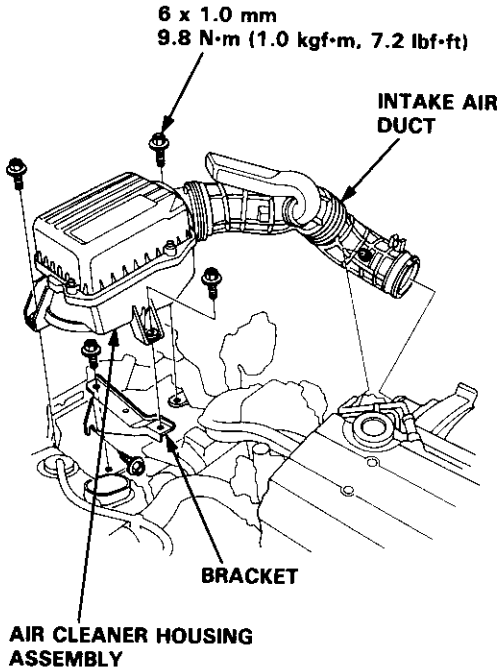

6. Remove the evaporative emission (EVAP) control canister hose and vacuum hose.

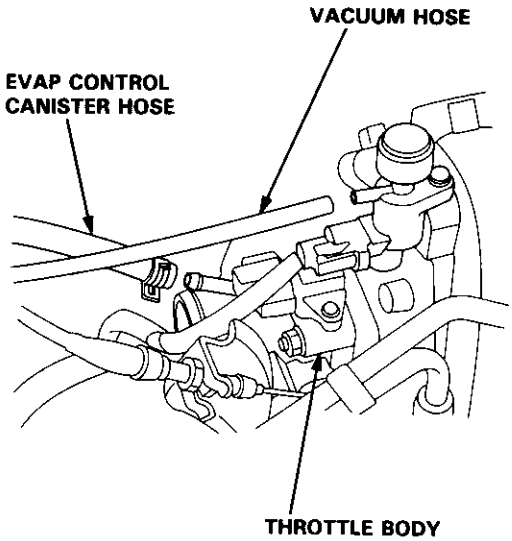

7. Remove the engine wire harness connectors on the right side of engine compartment.

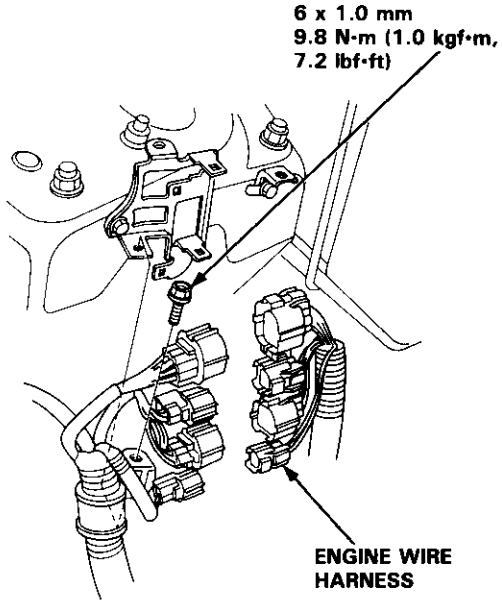

8. Relieve fuel pressure by loosening the service bolt on the fuel filter about one turn (see section 11).

⚠ WARNING Do not smoke while working on the fuel system. Keep open flame away from work area. Drain fuel only into an approved container.

CAUTION:

- **Before disconnecting any fuel line, relieve the fuel pressure as described above.**
- **Place a shop towel over the fuel filter to prevent pressurized fuel from spraying over the engine.**

9. Remove the fuel feed hose.

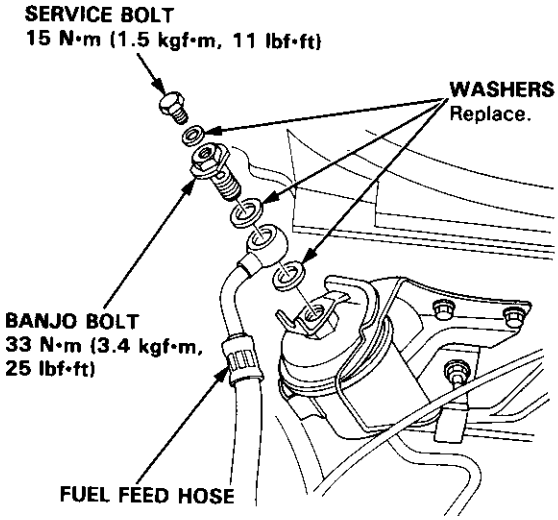

10. Remove the brake booster vacuum hose and fuel return hose.

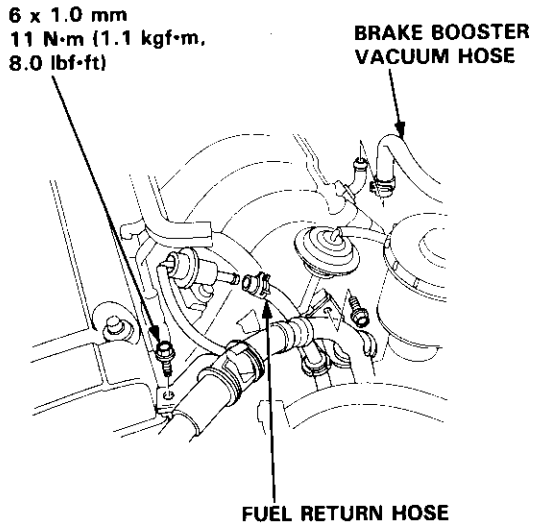

11. Remove the throttle cable by loosening the locknut, then slip the cable end out of the accelerator linkage.

NOTE:
- Take care not to bend the cable when removing it. Always replace any kinked cable with a new one.
- Adjust the throttle cable when installing (see section 11).

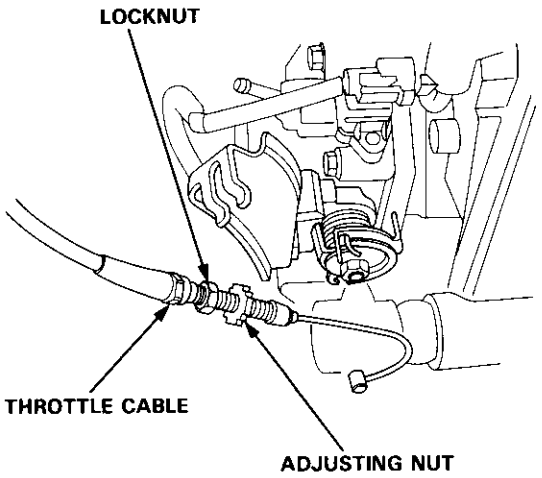

12. Remove the engine wire harness connectors, terminal and clamps on the left side of engine compartment.

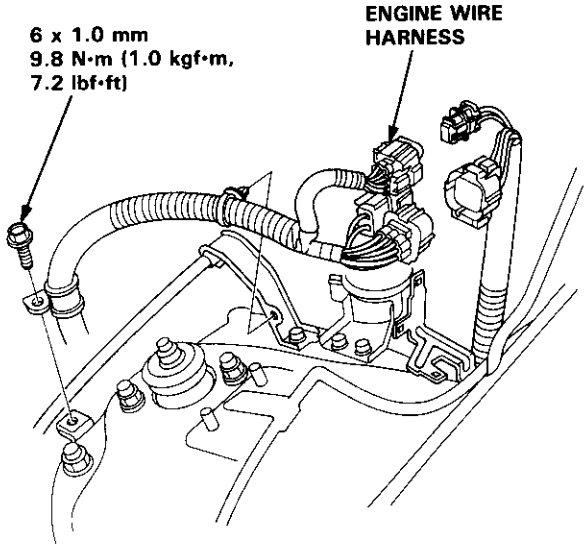

13. Remove the cruise control actuator.

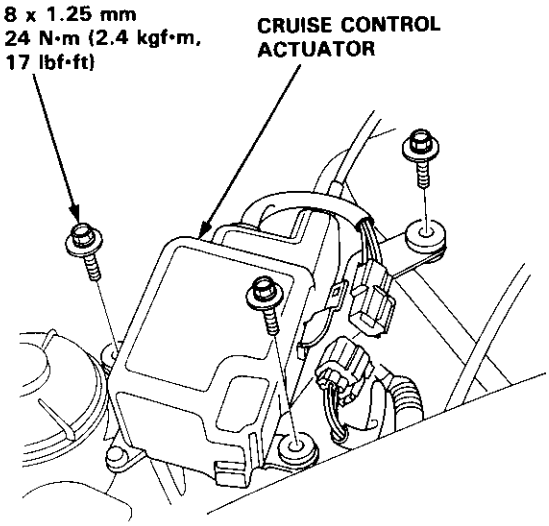

(cont'd)

14. Remove the engine ground cable at the body end.

15. Remove the adjusting bolt and mounting bolt, then remove the power steering (P/S) belt and pump.
    - Do not disconnect the P/S hoses.

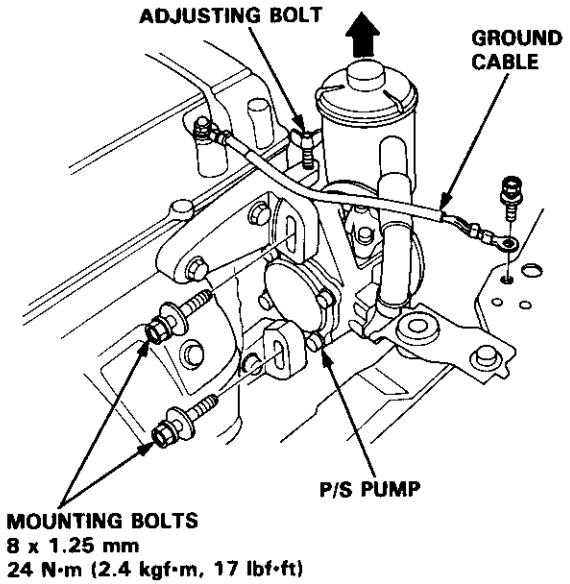

16. Loosen the idler pulley bolt and adjusting bolt, then remove the air conditioning (A/C) compressor belt.

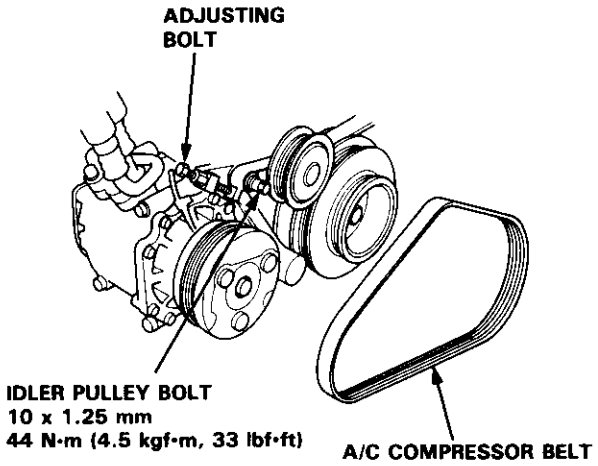

17. (Manual transmission) Remove the clutch slave cylinder and pipe/hose assembly.
    - Do not disconnect the pipe/hose assembly.

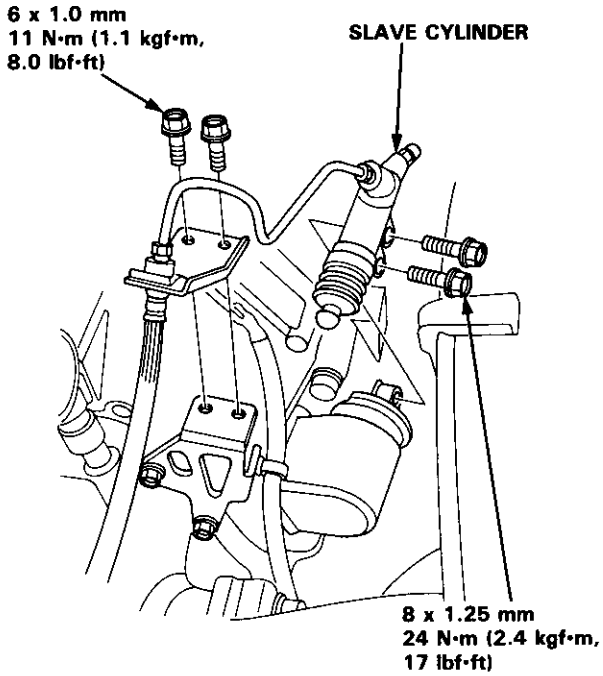

18. Remove the transmission ground cable and hose clamp.

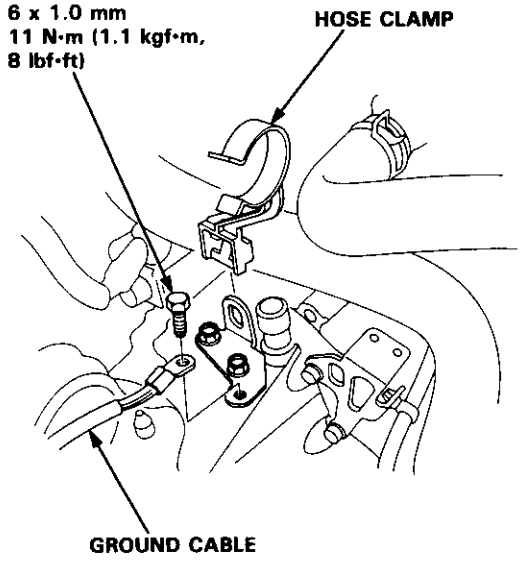

19. Remove the radiator cap.

⚠ WARNING Use care when removing the radiator cap to avoid scalding by hot engine coolant or steam.

20. Raise the hoist to full height.

21. Remove the front tires/wheels and the splash shield.

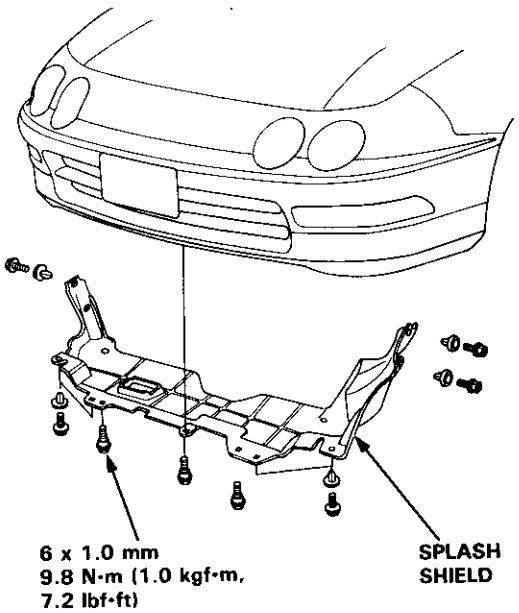

22. Drain the engine coolant (see page 10-5).
    - Loosen the drain plug in the radiator.

23. Drain the transmission oil or fluid. Reinstall the drain plug using a new washer.

24. Drain the engine oil. Reinstall the drain plug using a new washer.

    CAUTION: Do not overtighten the drain plug.

25. Remove the upper and lower radiator hoses and the heater hoses.

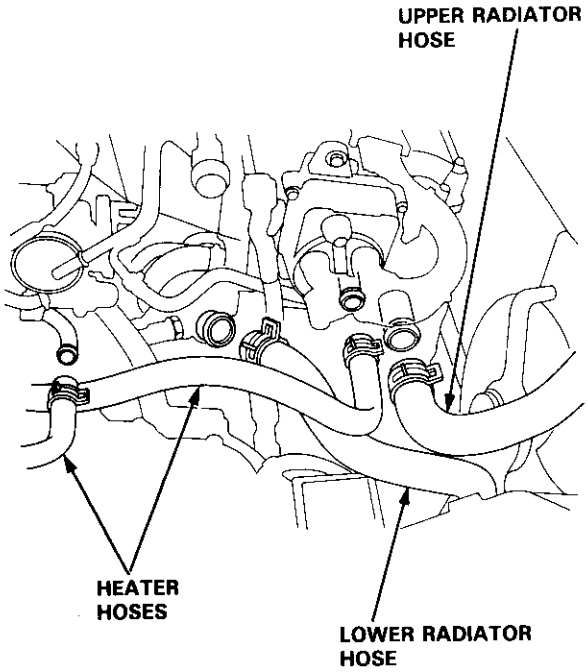

26. (Automatic transmission) Remove the ATF cooler hoses.

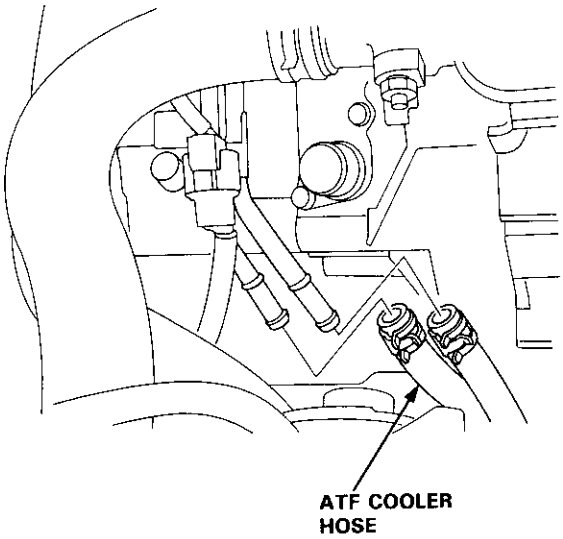

(cont'd)

27. Remove the radiator assembly (see page 10-4).

28. Remove the A/C compressor.
    - Do not disconnect A/C hoses.

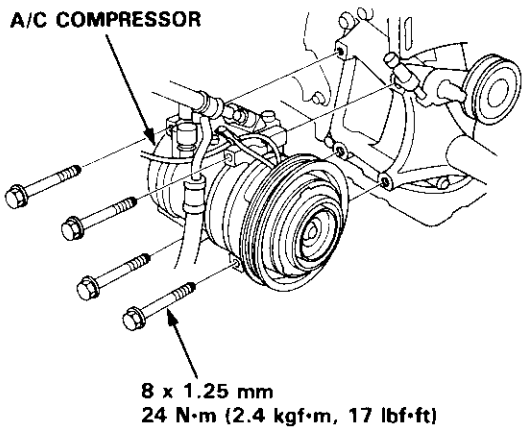

29. Disconnect the heated oxygen sensor (HO2S) connector, then remove exhaust pipe A.

B18C1 engine:

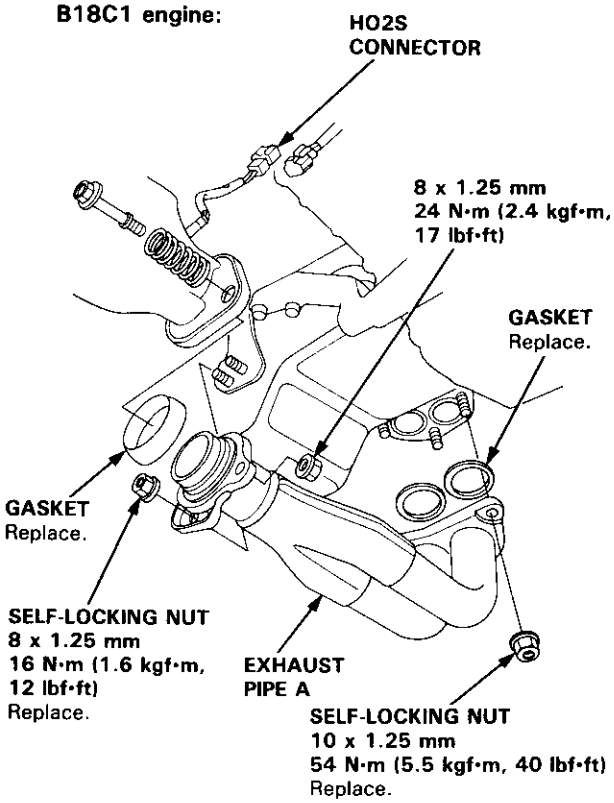

B18B1 engine:

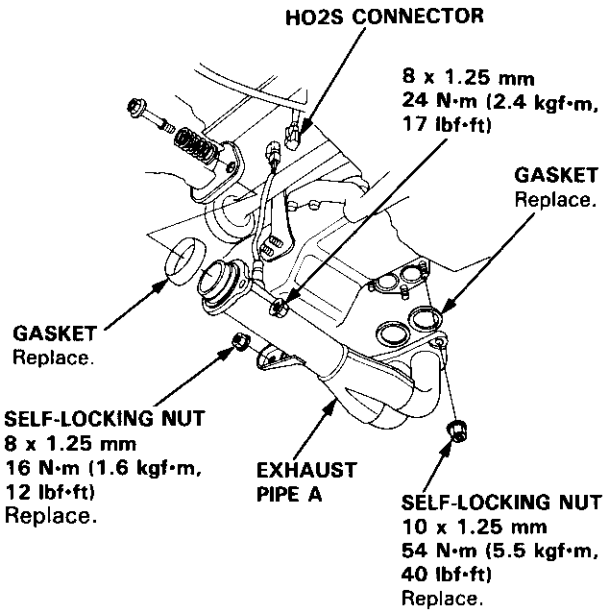

30. Remove the shift rod and extension rod (M/T).

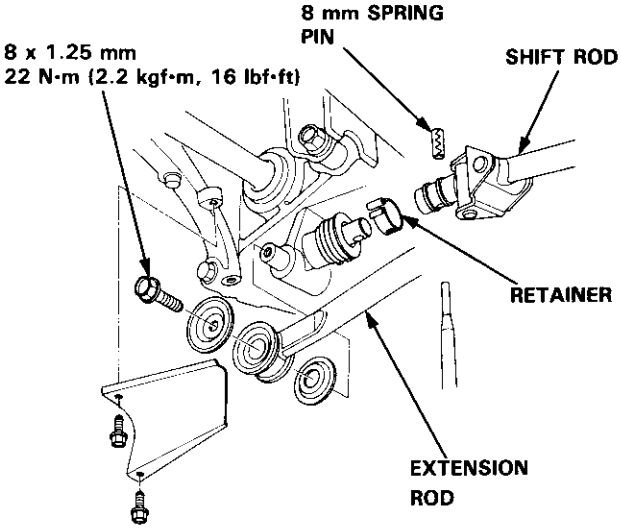

31. Remove the shift cable (A/T).

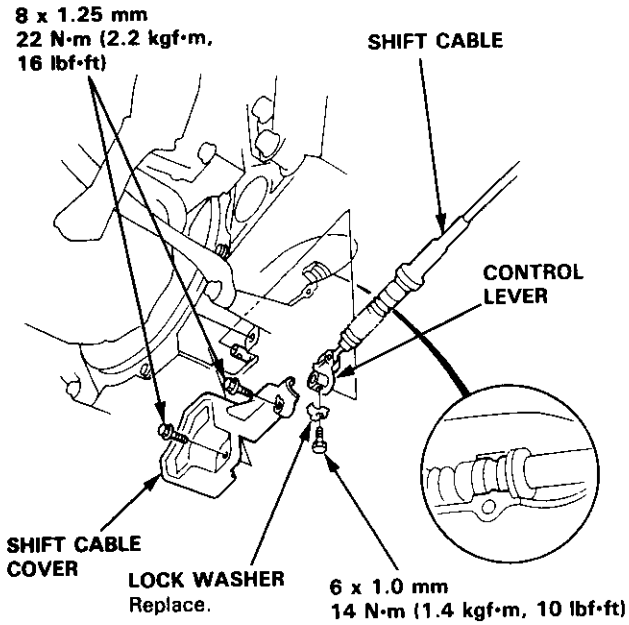

32. Remove the damper fork.

33. Disconnect the suspension lower arm ball joints using the special tool. Refer to section 18 for the proper procedure.

NOTE: Adjust the tool so the jaws are parallel to each other.

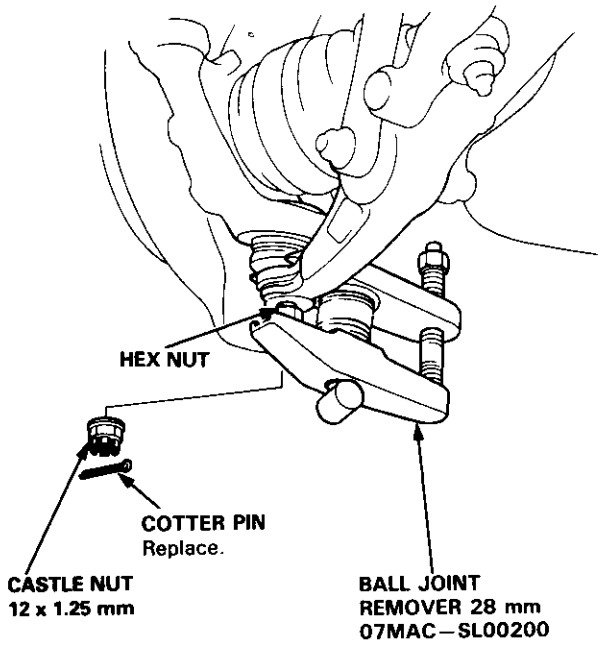

34. Remove the driveshafts.

CAUTION:
- **Do not pull on the driveshaft, the CV joint may come apart.**
- **Use care when prying out the assembly. Pull it straight to avoid damaging the differential oil seal or intermediate shaft dust seal.**

NOTE: Coat all precision finished surfaces with clean engine oil or grease. Tie plastic bags over the driveshaft ends.

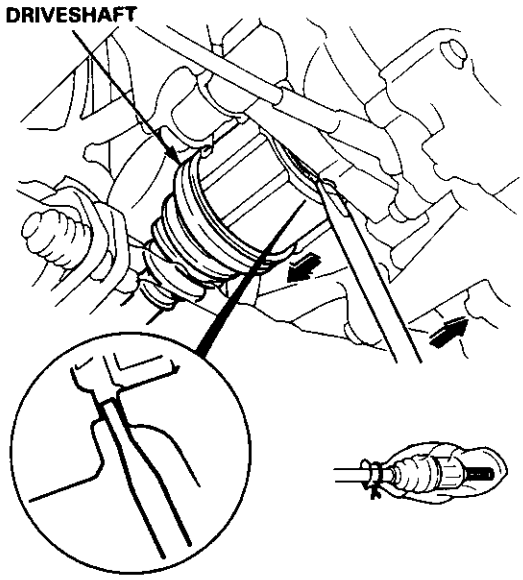

(cont'd)

35. Lower the hoist.

36. Attach the chain hoist to the engine.

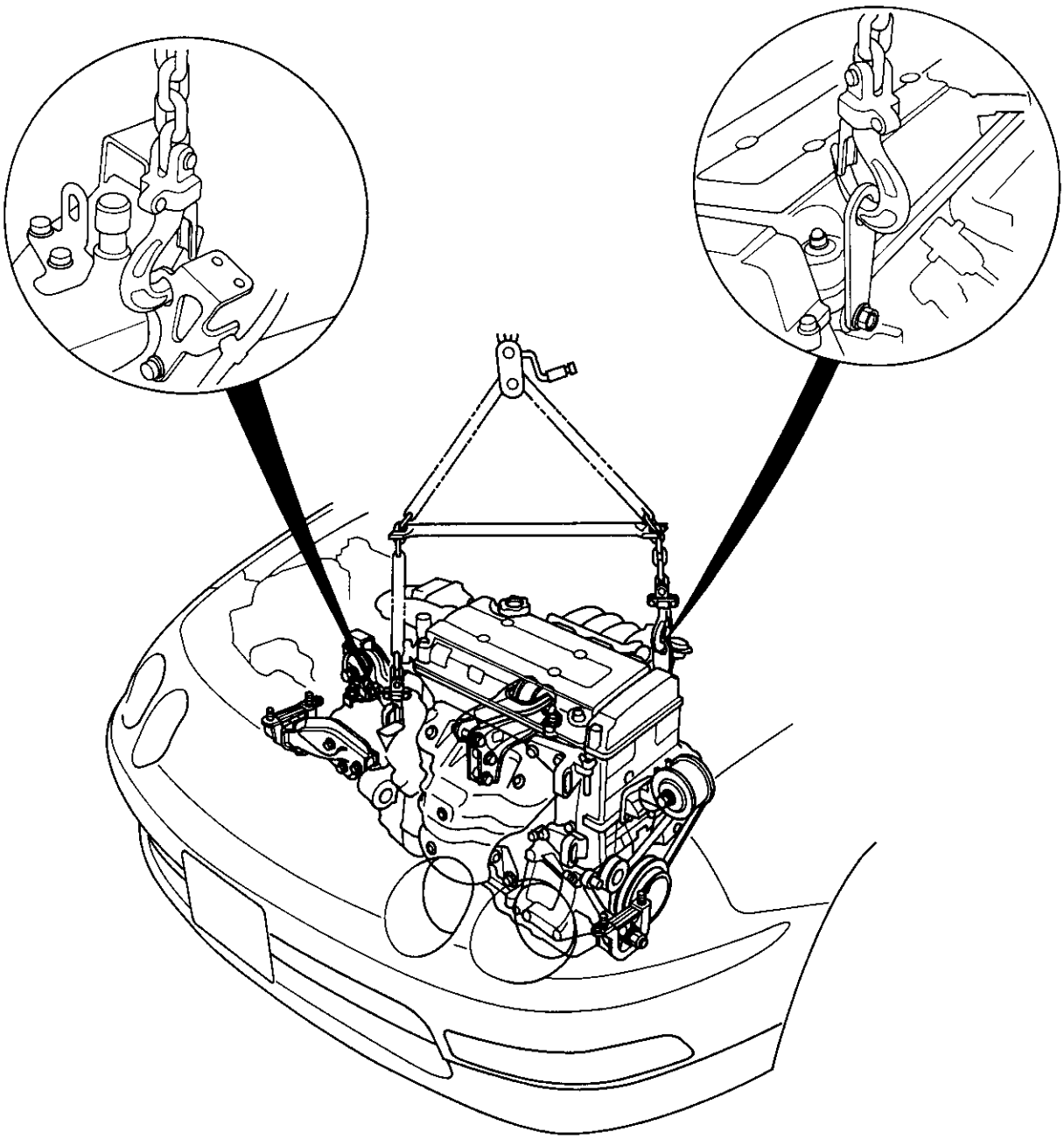

37. Remove the left and right front mounts and brackets.

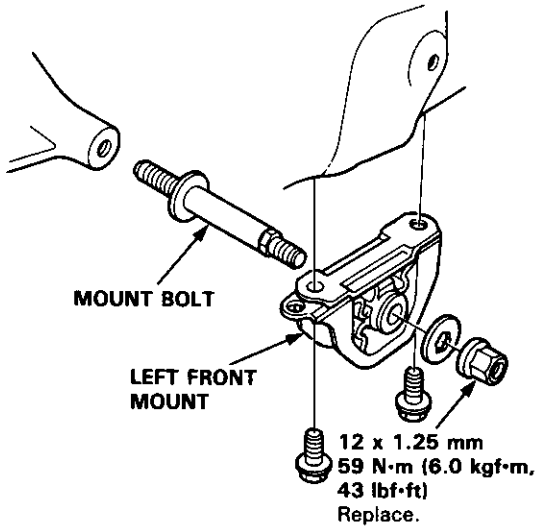

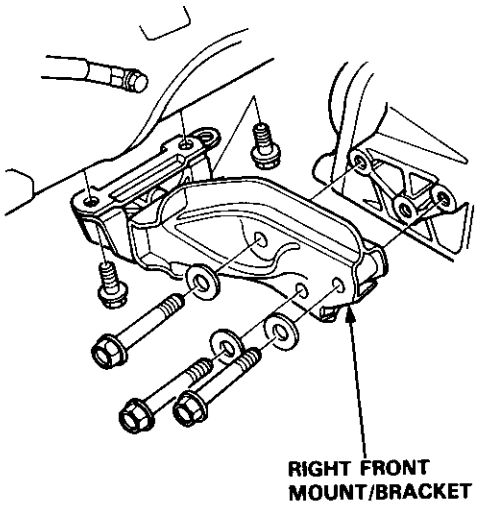

38. Remove the rear mount bracket.

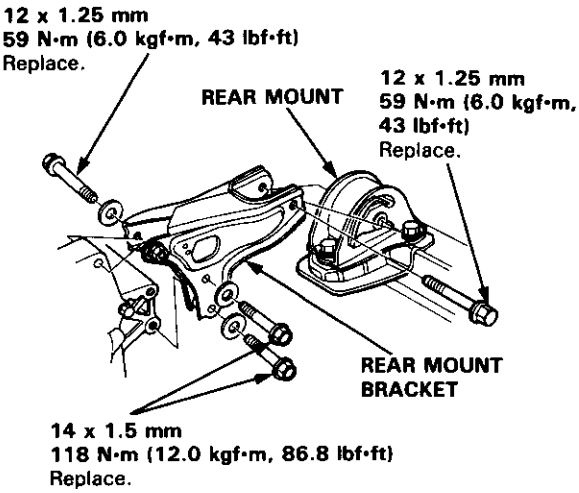

39. Remove the side engine mount.

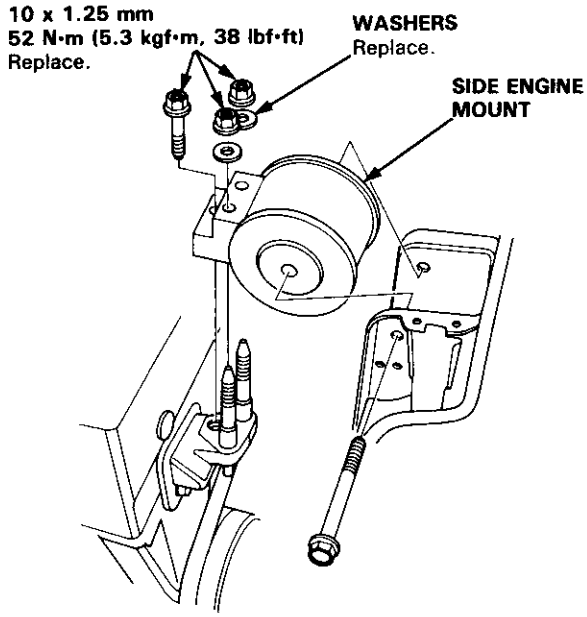

40. Remove the transmission mount.

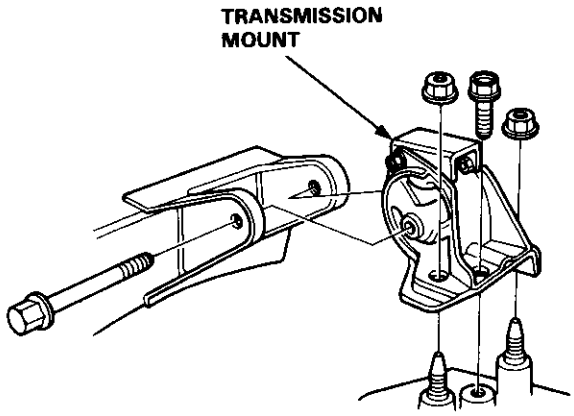

41. Check that the engine is completely free of vacuum hoses, fuel and engine coolant hoses, and electrical wiring.

42. Slowly raise the engine approximately 150 mm (6 in). Check once again that all hoses and wires are disconnected from the engine.

43. Raise the engine all the way and remove it from the car.

(cont'd)

Mount Locations:

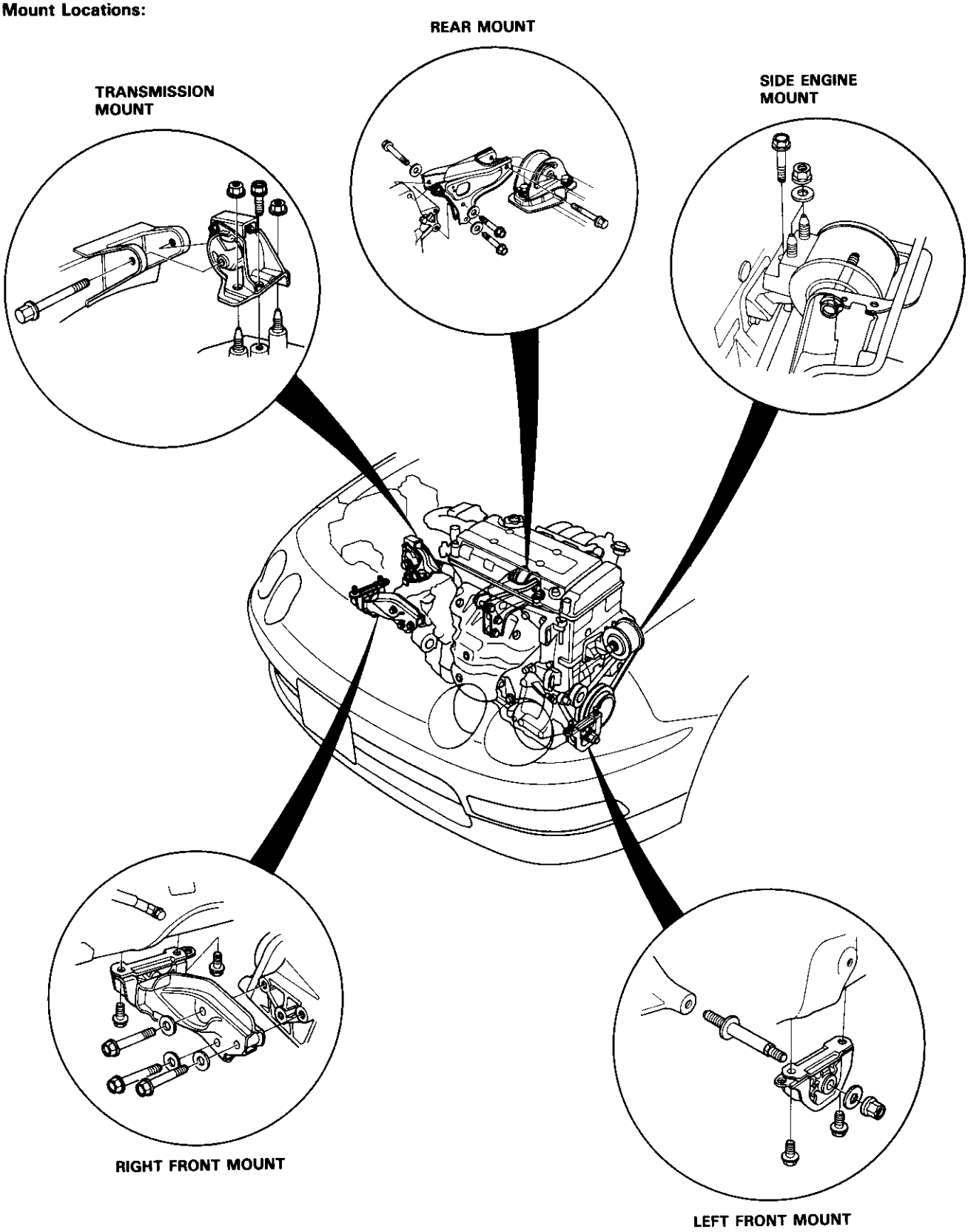

Engine Installation

Install the engine in the reverse order of removal. Reinstall the mount bolts/nuts in the following sequence. Failure to follow these procedures may cause excessive noise and vibration, and reduce bushing life.

1. Install the transmission mount, then tighten the bolt/nuts on the transmission side. Leave the mount bolt loose.

A/T:

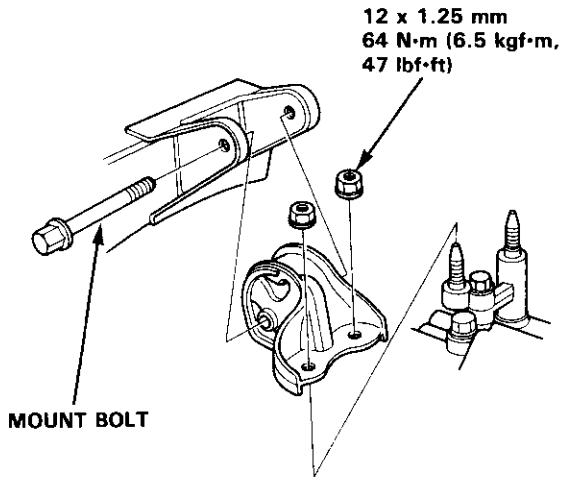

M/T:

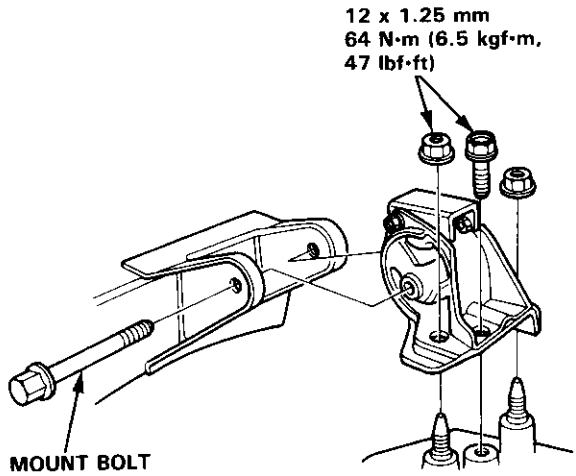

2. Install the engine side mount, then tighten the bolt/nuts on the engine side. Leave the mount bolt loose.

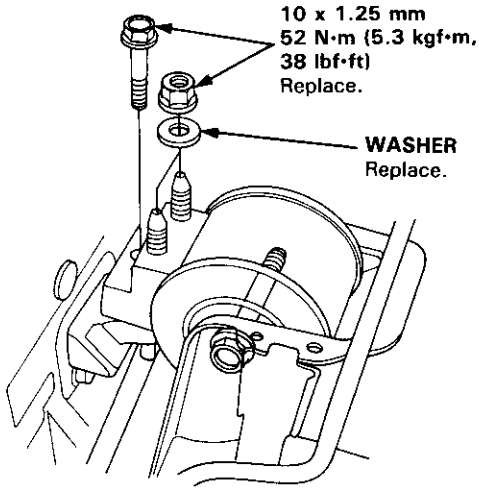

3. Tighten the mount bolt on the transmission mount.

A/T:

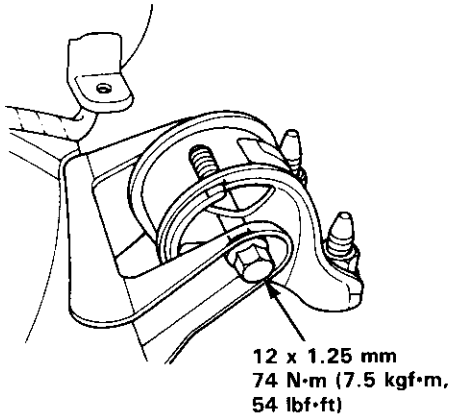

M/T:

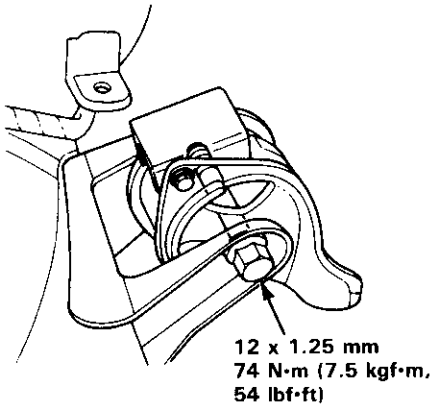

(cont'd)

4. Tighten the mount bolt on the side engine mount.

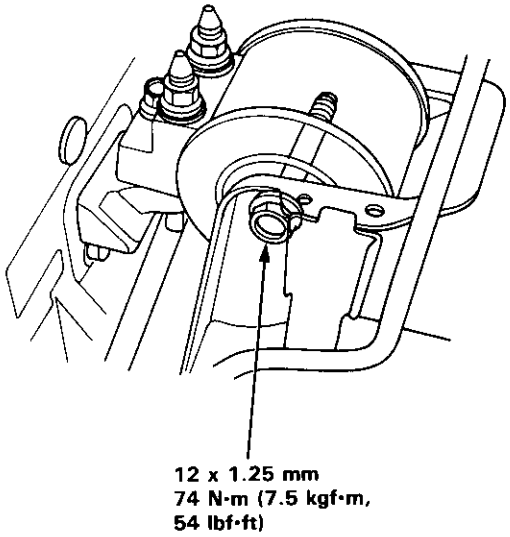

5. Install the rear mount bracket, then tighten the bolts in the numbered sequence as shown (①–③).

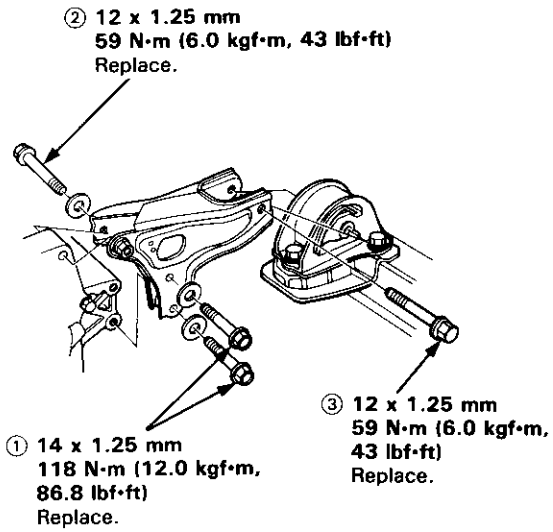

6. Install the right front mount/bracket, then tighten the bolts in the numbered sequence as shown (①–②).

A/T:

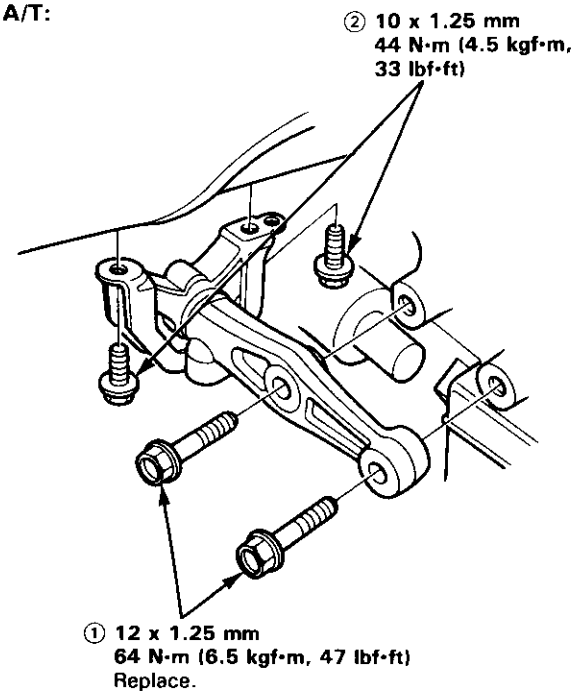

M/T:

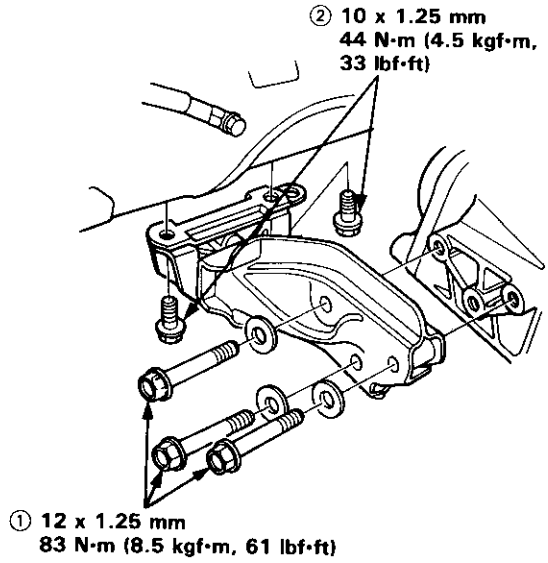

Install the left front mount, then tighten the bolts in the numbered sequence as shown (①—③).

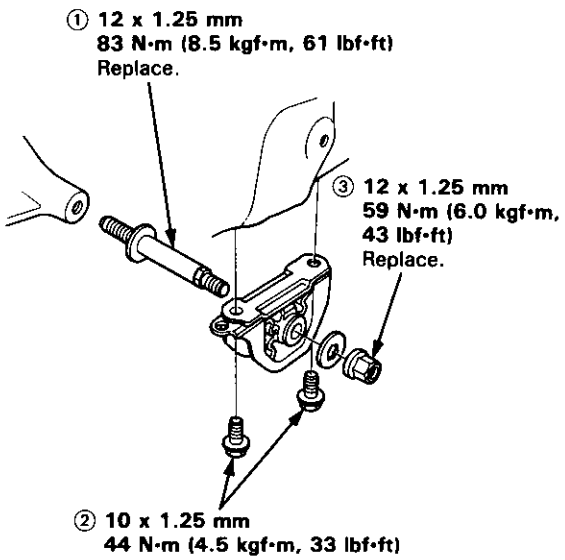

- Check that the spring clip on the end of each driveshaft clicks into place.

CAUTION: Use new spring clips.

- Bleed air from the cooling system at the bleed bolt with the heater valve open (see page 10-5).
- Adjust the throttle cable (see section 11).
- Check the clutch pedal free play (see section 12).
- Check that the transmission shifts into gear smoothly.
- Adjust the tension of the following drive belts.
  Alternator belt (see section 23).
  P/S pump belt (see section 17).
  A/C compressor belt (see section 22).
- Inspect for fuel leakage (see section 11).
  - After assembling fuel line parts, turn on the ignition switch (do not operate the starter) so that the fuel pump operates for approximately two seconds and the fuel line pressurizes. Repeat this operation two or three times and check for fuel leakage at any point in the fuel line.

(cont'd)

Mount/Bracket Torque

Mount and Bracket Bolts/Nuts Torque Valve Specification:

TRANSMISSION MOUNT:

M/T:

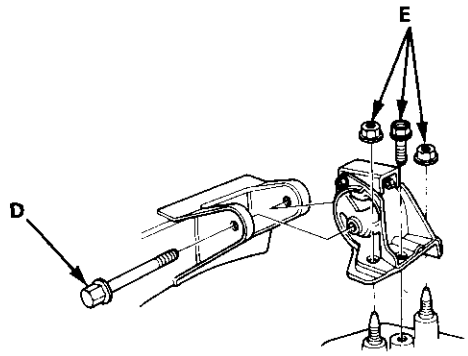

A/T:

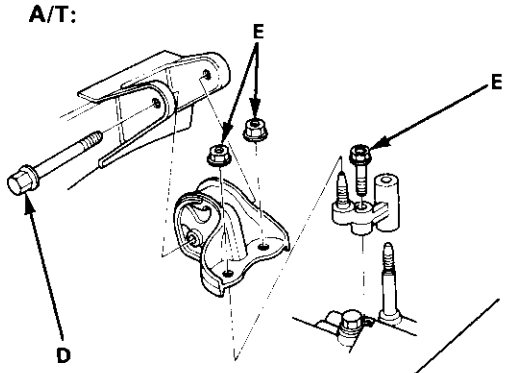

REAR MOUNT:

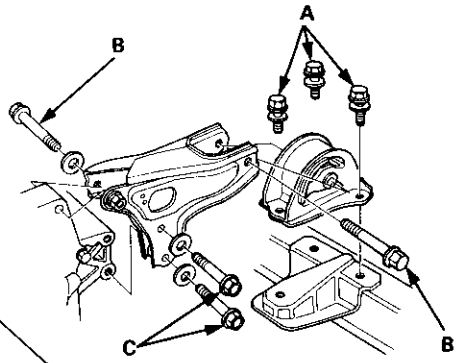

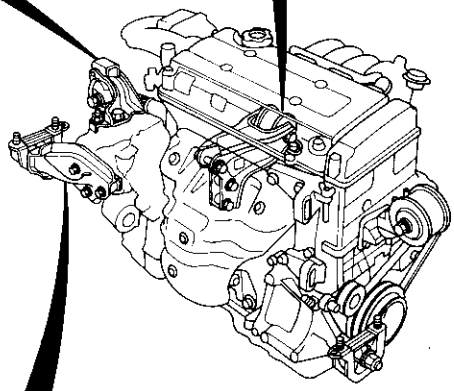

RIGHT FRONT MOUNT:

M/T:

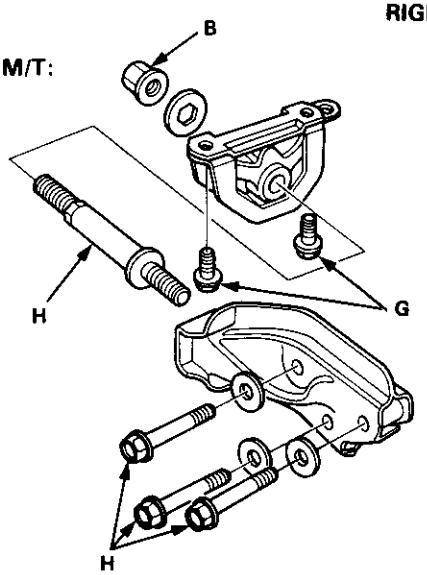

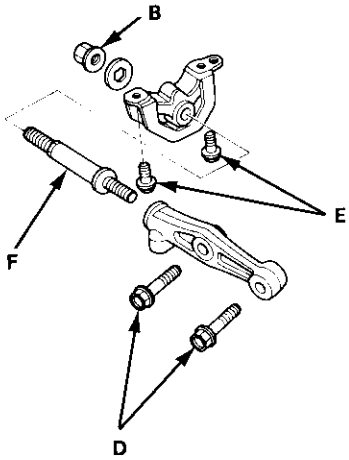

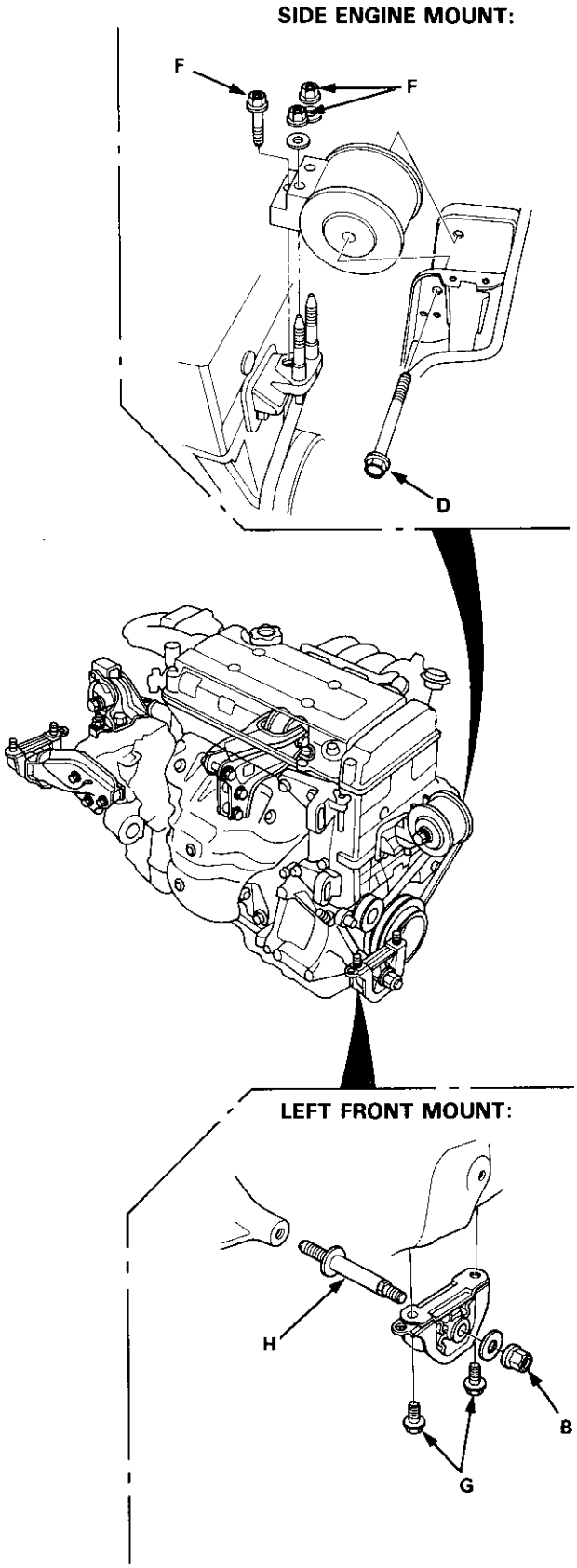

Torque Specifications:

A: 10 x 1.25 mm
59 N·m (6.0 kgf·m, 43 lbf·ft)
B: 12 x 1.25 mm
59 N·m (6.0 kgf·m, 43 lbf·ft)
Replace.
C: 14 x 1.5 mm
118 N·m (12.0 kgf·m, 86.8 lbf·ft)
Replace.
D: 12 x 1.25 mm
74 N·m (7.5 kgf·m, 54 lbf·ft)
E: 12 x 1.25 mm
64 N·m (6.5 kgf·m, 47 lbf·ft)
F: 10 x 1.25 mm
52 N·m (5.3 kgf·m, 38 lbf·ft)
Replace.
G: 10 x 1.25 mm
44 N·m (4.5 kgf·m, 33 lbf·ft)
H: 12 x 1.25 mm
83 N·m (8.5 kgf·m, 61 lbf·ft)
I: 12 x 1.25 mm
64 N·m (6.5 kgf·m, 38 lbf·ft)
Replace.

(cont'd)

Mount/Bracket Torque

(cont'd)

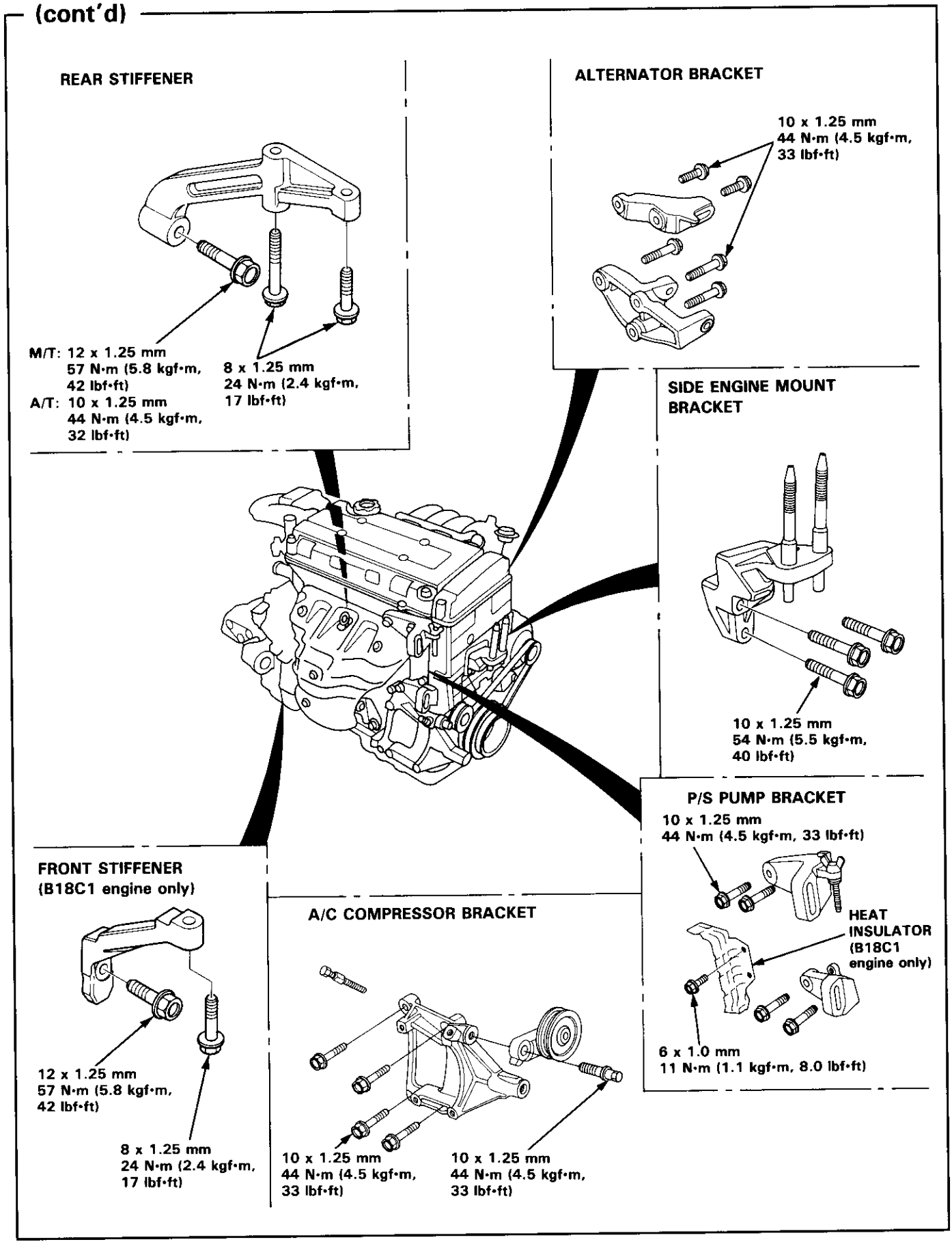

Cylinder Head/Valve Train
B18B1 engine

Special Tools 6-2
Valve Clearance
  Adjustment 6-3
Valve Seals
  Replacement (cylinder head removal not required) 6-5
  Reconditioning 6-27
Timing Belt
  Illustrated Index 6-7
  Inspection 6-9
  Tension Adjustment 6-9
  Removal 6-10
  Installation 6-12
Crankshaft Pulley Bolt
  Replacement 6-8
Cylinder Head
  Illustrated Index 6-14
  Removal 6-15
  Warpage 6-28
  Installation 6-28
Camshafts
  Inspection 6-21
Valves, Valve Springs and Valve Seals
  Removal 6-22
  Installation Sequence 6-23
  Valve Installation 6-24
Valve Guides
  Valve Movement 6-24
  Replacement 6-25
  Reaming 6-26

Special Tools

Ref. No.	Tool Number	Description	Qty	Page Reference
①	07GAD – PH70100	Valve Guide Installer	1	6-23
②	07JAB – 001020A	Holder Handle	1	6-8
③	07MAB – PY3010A	Pulley Holder Attachment, HEX 50 mm, Offset	1	6-8
④	07757 – PJ1010A	Valve Spring Compressor Attachment	1	6-22
⑤	07947 – 6570100	Valve Guide Driver, 6.6 mm	1	6-25, 26
⑥	07984 – 657010C	Valve Guide Reamer, 6.6 mm	1	6-26

①

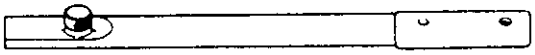

②

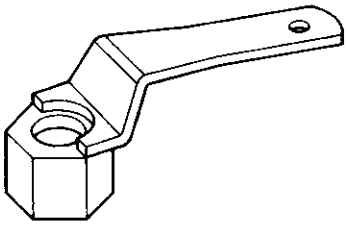

③

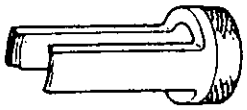

④

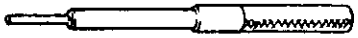

⑤

⑥

Valve Clearance

Adjustment

NOTE:
- Valves should be adjusted cold; at a cylinder head temperature of less than 100°F (38°C).
  Adjustment is the same for both intake and exhaust valves.
- After adjusting, retorque the crankshaft pulley bolt to 177 N·m (18.0 kgf·m, 130 lbf·ft).

1. Remove cylinder head cover.

ADJUSTING SCREW LOCATIONS:

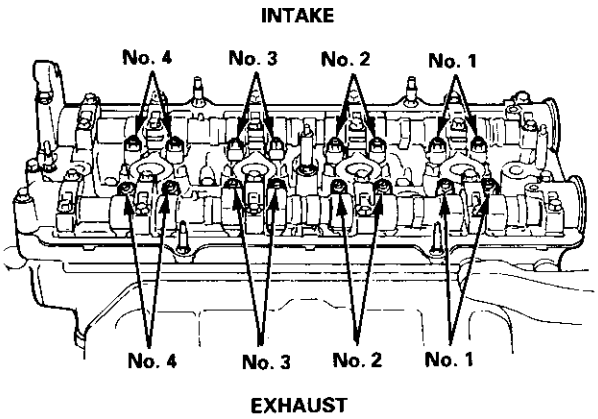

2. Set the No. 1 piston at top dead center (TDC) (see page 6-12). "UP" mark on the pulley should be at the top, and the TDC grooves on the pulley should align with the TDC groove on timing belt back cover. TDC mark (painted white) on the crankshaft pulley should align with pointer on the timing belt lower cover.

Number 1 piston at TDC:

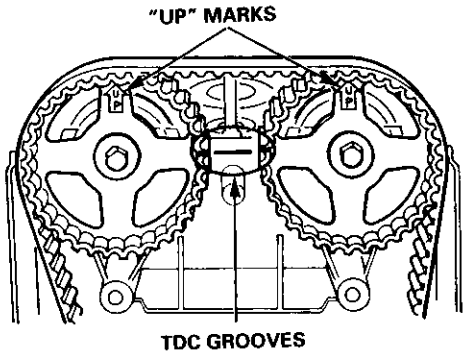

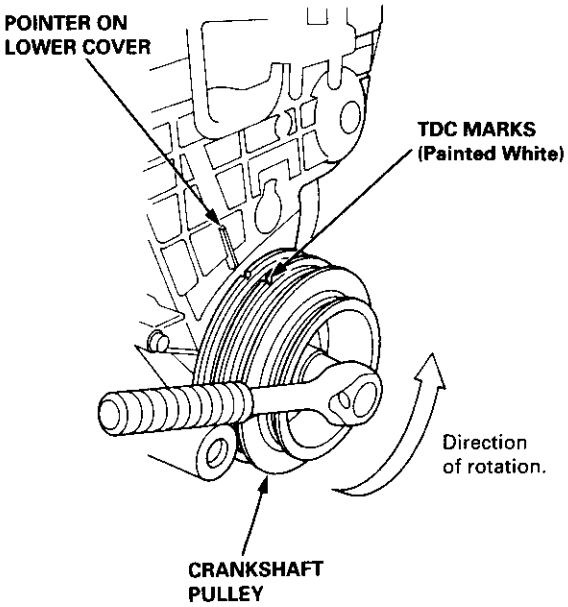

Adjustment (cont'd)

3. Adjust valve clearances on No. 1 cylinder.

   Intake: 0.08 – 0.12 mm (0.003 – 0.005 in)
   Exhaust: 0.16 – 0.20 mm (0.006 – 0.008 in)

4. Loosen the locknut and turn the adjusting screw until feeler gauge slides back and forth with a slight amount of drag.

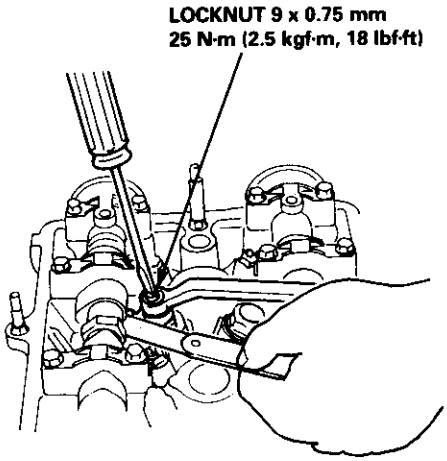

5. Tighten the locknut and recheck clearance again. Repeat adjustment if necessary.

6. Rotate the crankshaft 180° counterclockwise (camshaft pulley turns 90°). The "UP" mark should be on the exhaust side. Adjust valves on No. 3 cylinder.

Number 3 piston at TDC:

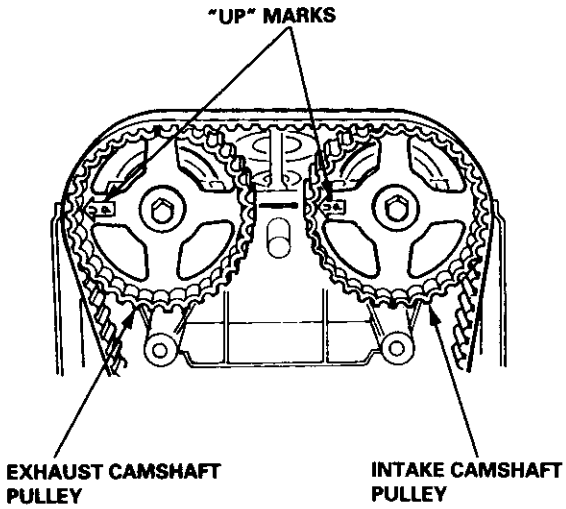

7. Rotate the crankshaft 180° counterclockwise to bring No. 4 piston to TDC. The "UP" mark should be pointing straight down. Adjust valves on No. 4 cylinder.

Number 4 piston at TDC:

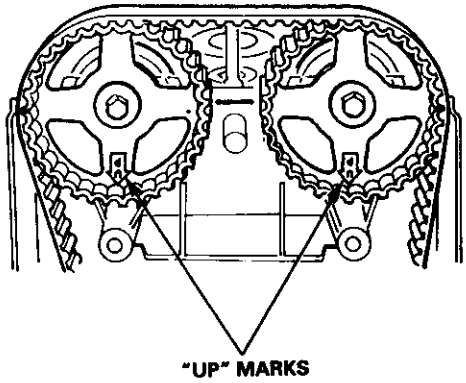

8. Rotate the crankshaft 180° counterclockwise to bring No. 2 piston to TDC. The "UP" mark should be on the intake side. Adjust valves on No. 2 cylinder.

Number 2 piston at TDC:

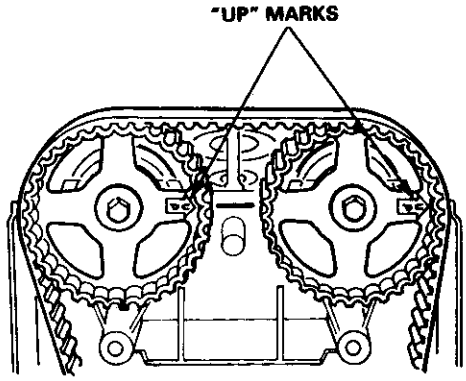

NOTE: Refer to page 6-31 when installing cylinder head cover.

Valve Seals

Replacement (cylinder head removal not required)

NOTE: Cylinder head removal is not required in this procedure.

The procedure shown below applies when using the in-car valve spring compressor (Snap-on YA8845 with YA8845-2A 7/8" attachment).

⚠ WARNING When using this tool, as with any tool, always use approved eye protection. Using the right tool for each job helps increase productivity while safeguarding tools, equipment and the user.

1. Turn the crankshaft so that the No. 1 and the No. 4 pistons are at top dead center (TDC).
2. Remove the cylinder head cover.
3. Remove the distributor.
4. Loosen and disconnect the timing belt from the camshaft pulleys.
5. Remove the camshaft holder bolts, then remove the camshaft holder, the camshaft and rocker arms.

Intake Valve Seals

6. Using the 6 mm bolts supplied with the tool, mount the two uprights to the cylinder head at the end camshaft holders. The uprights fit as shown.
7. Insert the cross shaft through the bottom hole of the two uprights.

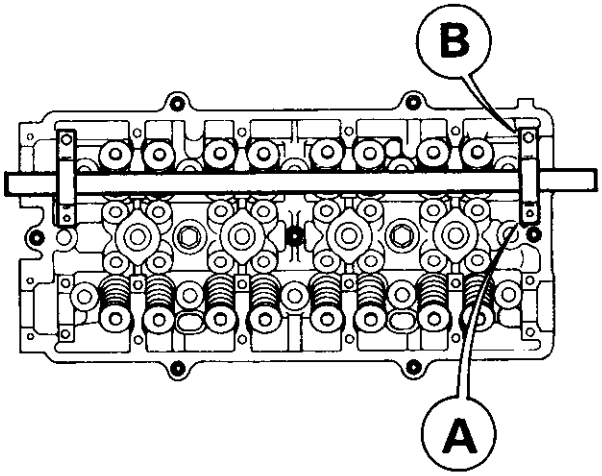

8. Select the 7/8 in. diameter long compressor attachment and fasten the attachment to the No. 4 hole of the lever arm with the speed pin supplied.
9. Position the piston at TDC and insert an air adaptor into the spark plug hole. Pump air into the cylinder to keep the valve closed while compressing springs and removing the valve keepers.
10. Position the lever arm under the cross shaft so the lever is perpendicular to the shaft and the compressor attachment rests on top of the retainer for the spring being compressed. Use the rear position slot on the lever as shown.

    NOTE: Put shop towels over the oil passages to prevent the valve keepers from falling into the cylinder head.

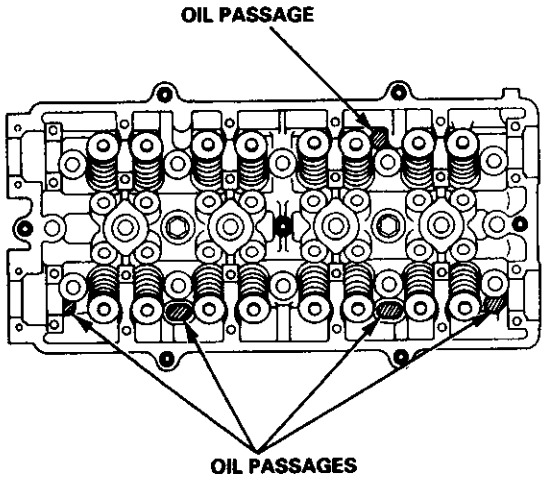

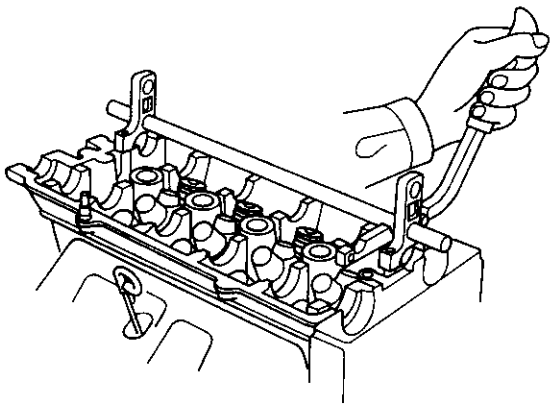

(cont'd)

Valve Seals

Replacement (cylinder head removal not required) (cont'd)

11. Using a downward motion on the lever arm, compress the valve spring and remove the keepers from the valve stem. Slowly release pressure on the spring.

12. Repeat step 11 for the other valve in that cylinder.

13. Remove the valve seals (see page 6-22).

14. Install the valve seals (see page 6-23).

15. Install the springs, the retainers and the keepers in reverse order of removal.

16. Repeat steps 9 to 15 for the other three cylinders.

Exhaust Valve Seals

17. Using the 6 mm bolts supplied with the tool, mount the two uprights to the cylinder head at the end camshaft holders. The uprights fit as shown.

18. Insert the cross shaft through the bottom hole of the two uprights.

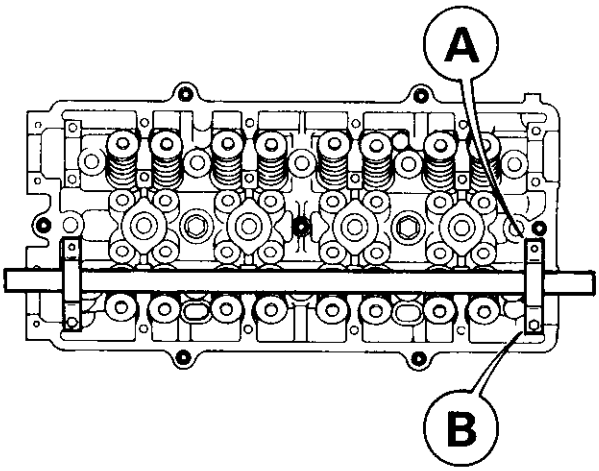

19. Select the 7/8 in. diameter short compressor attachment and fasten the attachment to the No. 4 hole of the lever arm with the speed pin supplied.

20. Position the piston at TDC and insert an air adaptor into the spark plug hole. Pump air into the cylinder to keep the valve closed while compressing springs and removing the valve keepers.

21. Position the lever arm under the cross shaft so the lever is perpendicular to the shaft and the compressor attachment rests on top of the retainer for the spring being compressed. Use the rear position slot on the lever as shown.

    NOTE: Put shop towels over the oil passages to prevent the valve keepers from falling into the cylinder head.

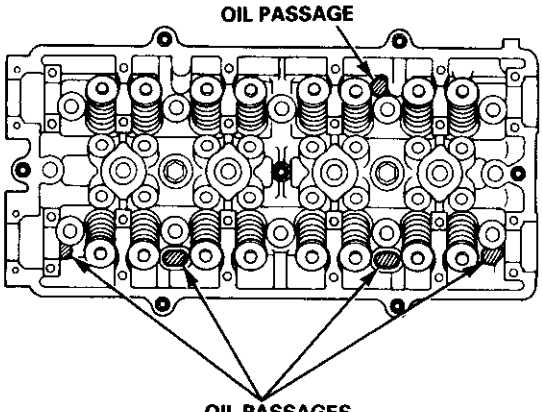

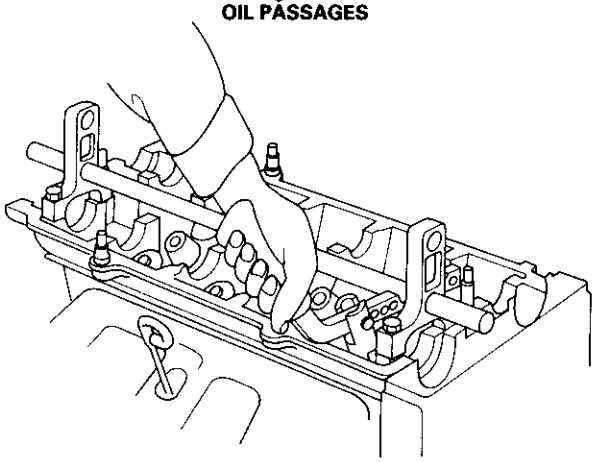

22. Using a downward motion on the lever arm, compress the valve spring and remove the keepers from the valve stem. Slowly release pressure on the spring.

23. Repeat step 22 for the other valve in that cylinder.

24. Remove the valve seals (see page 6-22).

25. Install the valve seals (see page 6-23).

26. Install the springs, the retainers and the keepers in reverse order of removal.

27. Repeat steps 20 to 26 on the other three cylinders.

    NOTE: Refer to page 6-31 when installing cylinder head cover.

Timing Belt

Illustrated Index

NOTE:
- Refer to page 6-12 for positioning crankshaft and pulley before installing belt.
- Mark the direction of rotation on the belt before removing.
- Replace the rubber seals for oil leakage between the cylinder head and cover.
- Do not use the middle cover and lower cover for storing items disassembled.
- Clean the middle cover and lower cover before installation.

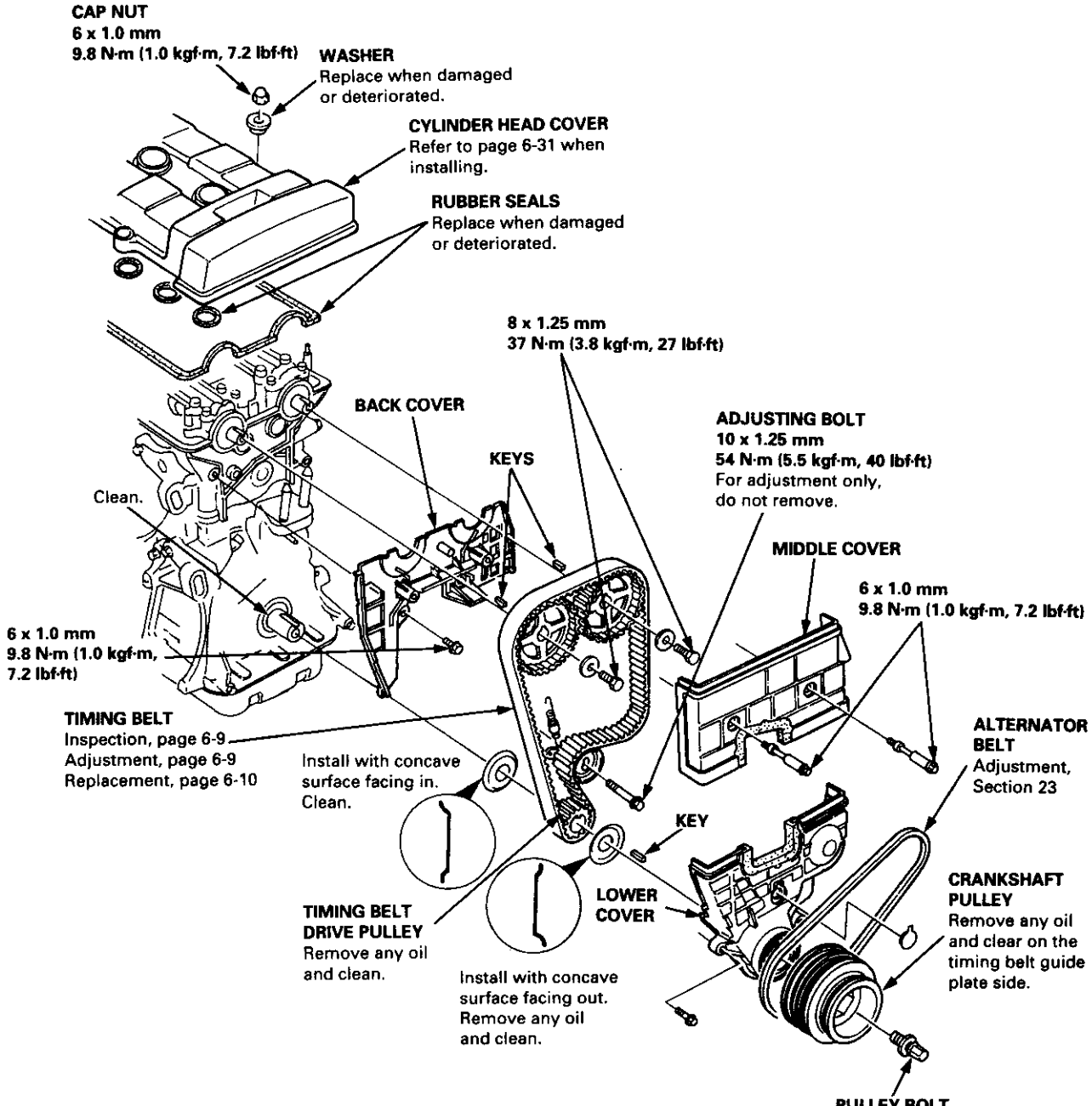

NOTE: When installing a new crankshaft and/or new bolt:
① tighten the crankshaft pulley bolt to 196 N·m (20.0 kgf·m, 145 lbf·ft),
② loosen bolt,
③ retighten it to 177 N·m (18.0 kgf·m, 130 lbf·ft).

Crankshaft Pulley Bolt

Replacement

NOTE:

- Crankshaft pulley bolt size and torque value:
  14 x 1.25 mm
  177 N·m (18.0 kgf·m, 130 lbf·ft)
- When installing a new crankshaft and/or new pulley bolt:

  ① tighten the pulley bolt to 196 N·m (20.0 kgf·m, 145 lbf·ft),
  ② loosen the bolt,
  ③ retighten it to 177 N·m (18.0 kgf·m, 130 lbf·ft).

- When installing the bolt, lubricate the threads and flange with engine oil, but don't lubricate the washer and pulley.

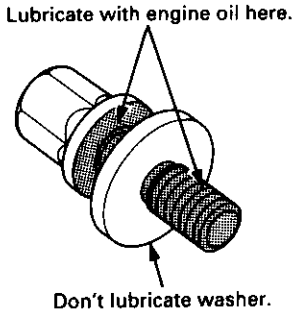

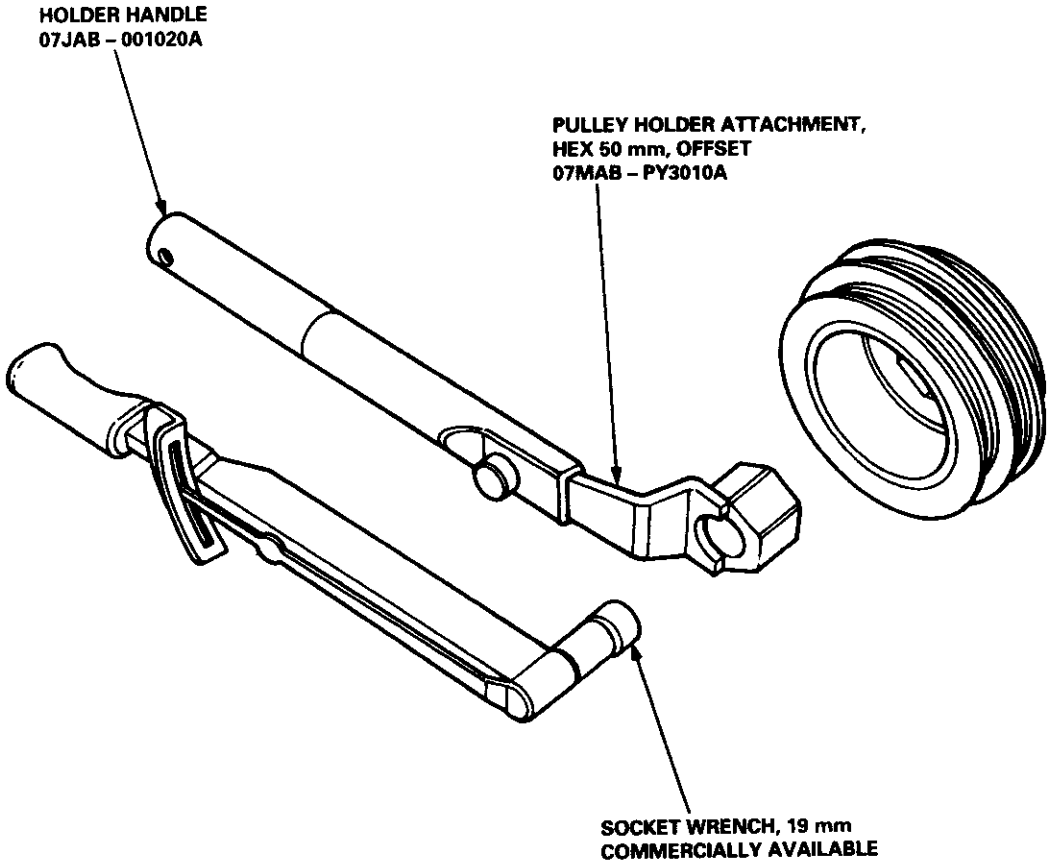

Timing Belt

Inspection

1. Remove the cylinder head cover.

   - Refer to page 6-31 when installing.

2. Inspect the timing belt for cracks and oil or coolant soaking.

   NOTE:
   - Replace the belt if oil or coolant soaked.
   - Remove any oil or solvent that gets on the belt.

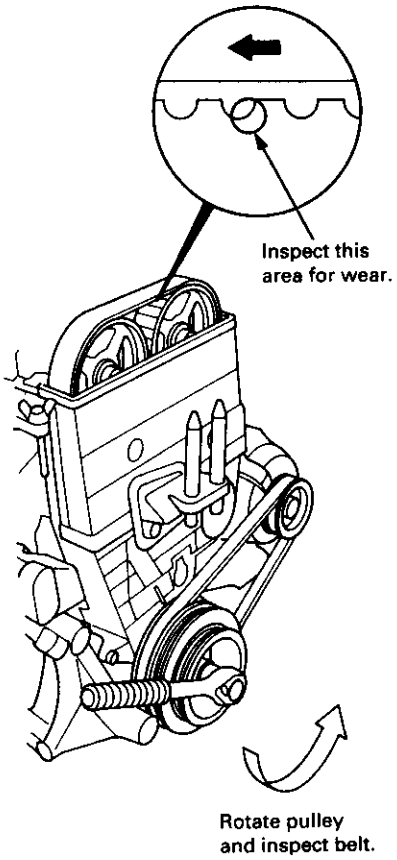

3. After inspecting, retorque the crankshaft pulley bolt to 177 N·m (18.0 kgf·m, 130 lbf·ft).

Tension Adjustment

CAUTION: Always adjust timing belt tension with the engine cold.

NOTE:
- The tensioner is spring-loaded to apply proper tension to the belt automatically after making the following adjustment.
- Always rotate the crankshaft counterclockwise when viewed from the pulley side. Rotating it clockwise may result in improper adjustment of the belt tension.

1. Remove the cylinder head cover. (Refer to page 6-31 when installing.)

2. Set the No. 1 piston at TDC (see page 6-12).

3. Rotate the crankshaft 5 – 6 revolutions to set the belt.

4. Set the No. 1 piston at TDC.

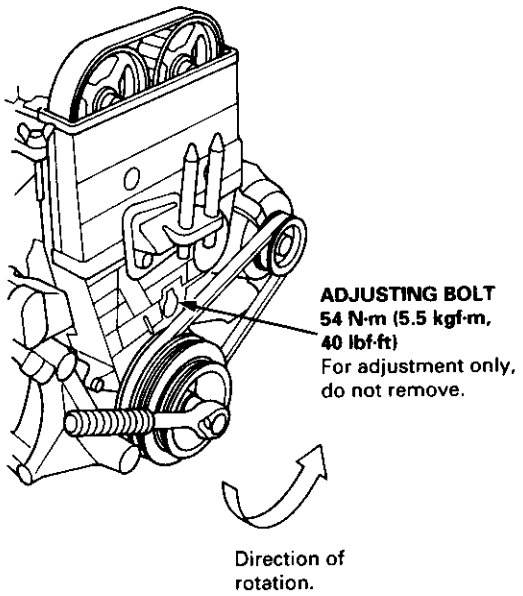

5. Loosen the adjusting bolt 1/2 turn (180°) only.

6. Rotate the crankshaft counterclockwise 3-teeth on the camshaft pulley.

7. Tighten the adjusting bolt to the specified torque.

8. After adjusting, retorque the crankshaft pulley bolt to 177 N·m (18.0 kgf·m, 130 lbf·ft).

Removal

NOTE:
- Turn the crankshaft pulley so the No. 1 piston is at top dead center (TDC) before removing the belt (see page 6-12).
- Inspect the water pump when removed the timing belt (see page 10-9).

1. Remove the wheel well splash shield (see page 6-18).

2. Loosen the adjusting bolt and mounting bolts, then remove the power steering (P/S) pump belt.

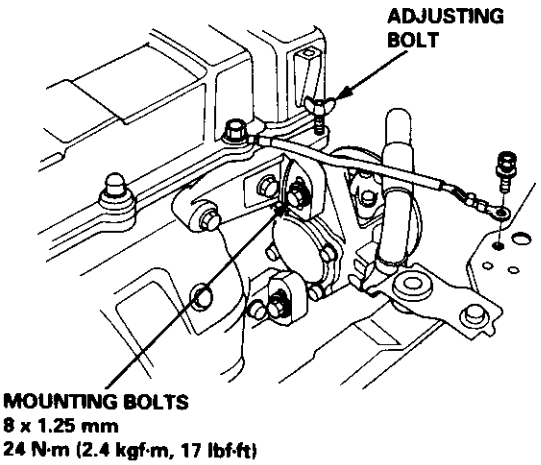

3. Loosen the adjusting bolt and idler pulley bracket bolt, then remove the air conditioning (A/C) compressor belt.

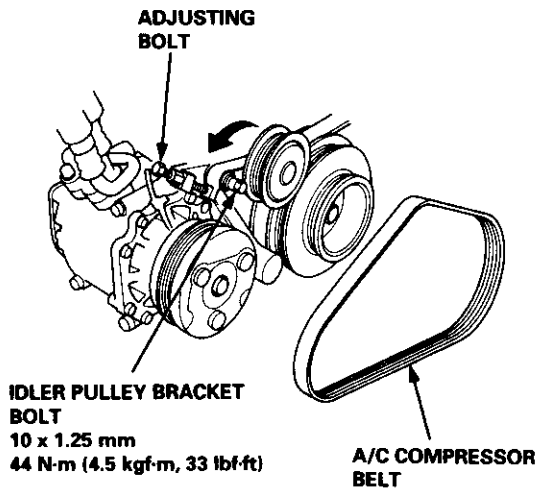

4. Loosen the adjusting nut and mounting nut, then remove the alternator belt.

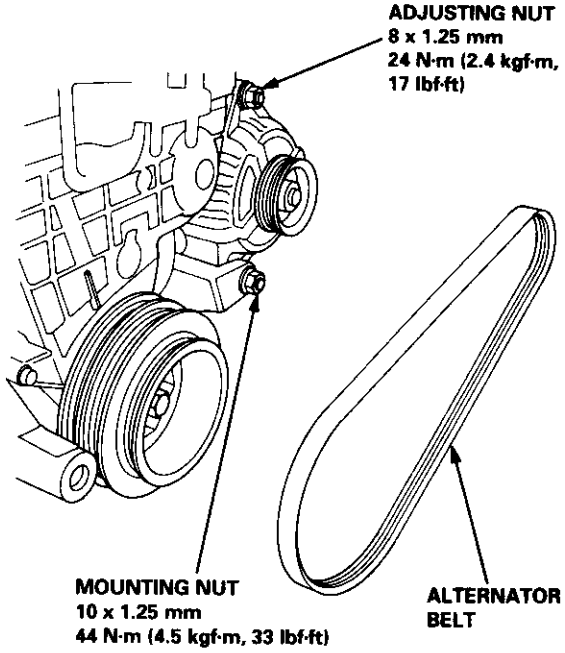

5. Remove the cruise control actuator (see page 6-18).

6. Remove the side engine mount.

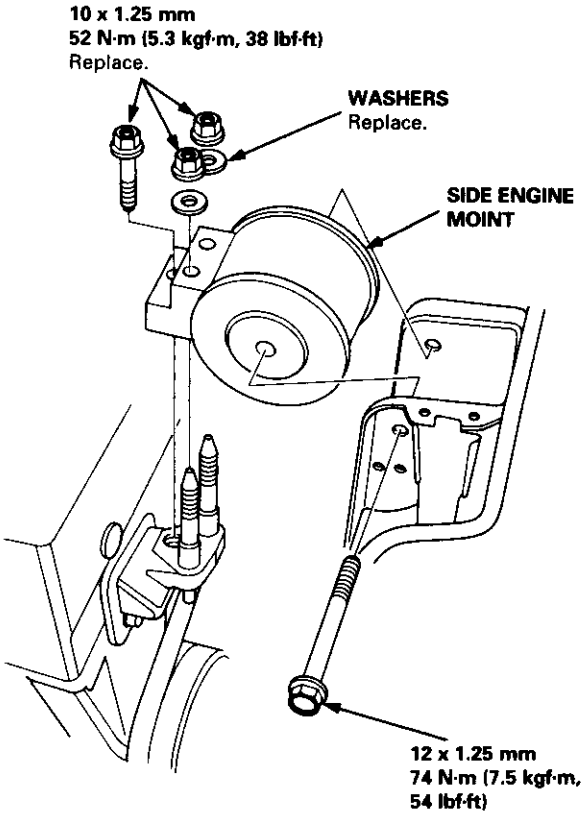

7. Remove the cylinder head cover.
   - Refer to page 6-31 when installing.
8. Remove the pulley bolt and crankshaft pulley (see page 6-8).
9. Remove the middle cover and the lower cover.
   NOTE:
   - Do not use the middle cover and lower cover for storing items disassembled.
   - Clean the middle cover and lower cover before installation.
10. Loosen the adjusting bolt 180°.
11. Push the tensioner to remove tension from the timing belt, then retighten the bolt.
12. Remove the timing belt from the pulleys.

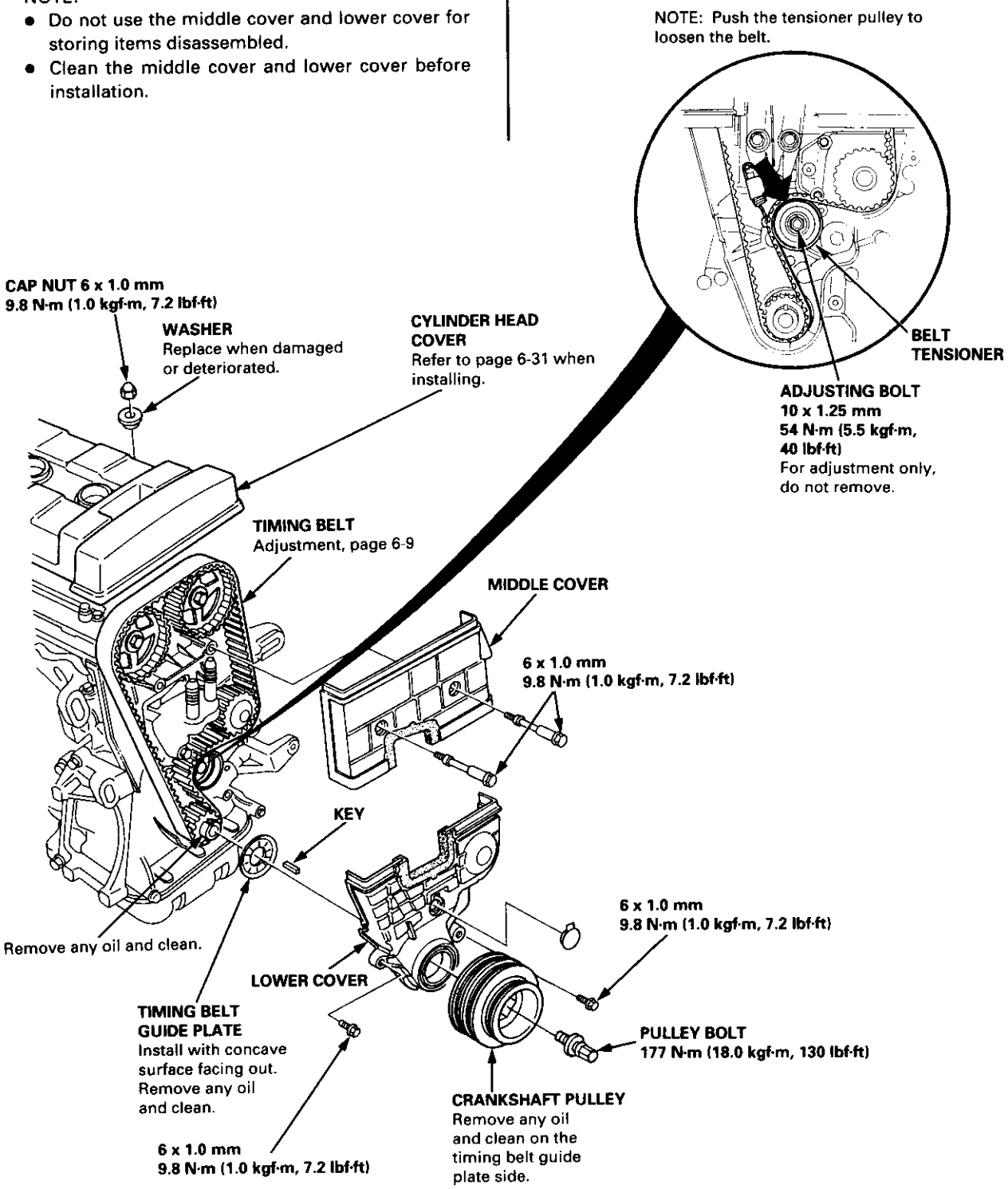

Installation

Install the timing belt in the reverse order of removal; Only key points are described here.

NOTE: Clean the middle cover and lower cover before installation.

1. Position the crankshaft and the camshaft pulleys as shown before installing the timing belt.

   A. Set the crankshaft so that the No. 1 piston is at top dead center (TDC). Align the groove on the teeth side of the timing belt drive pulley to the ⇩ pointer on the oil pump.

   B. Align the TDC marks on intake and exhaust pulleys.

   NOTE: To set the camshafts at TDC position for No. 1 piston, align the holes in the camshafts with the holes in No. 1 camshaft holders and insert 5.0 mm pin punches in the holes.

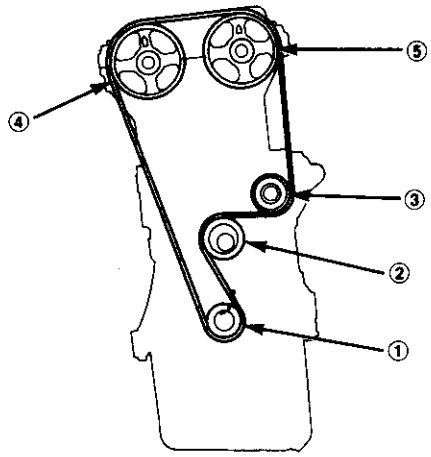

2. Install the timing belt tightly in the sequence shown.
   ① Timing belt drive pulley (crankshaft) → ② Adjusting pulley → ③ Water pump pulley → ④ Exhaust camshaft pulley → ⑤ Intake camshaft pulley.

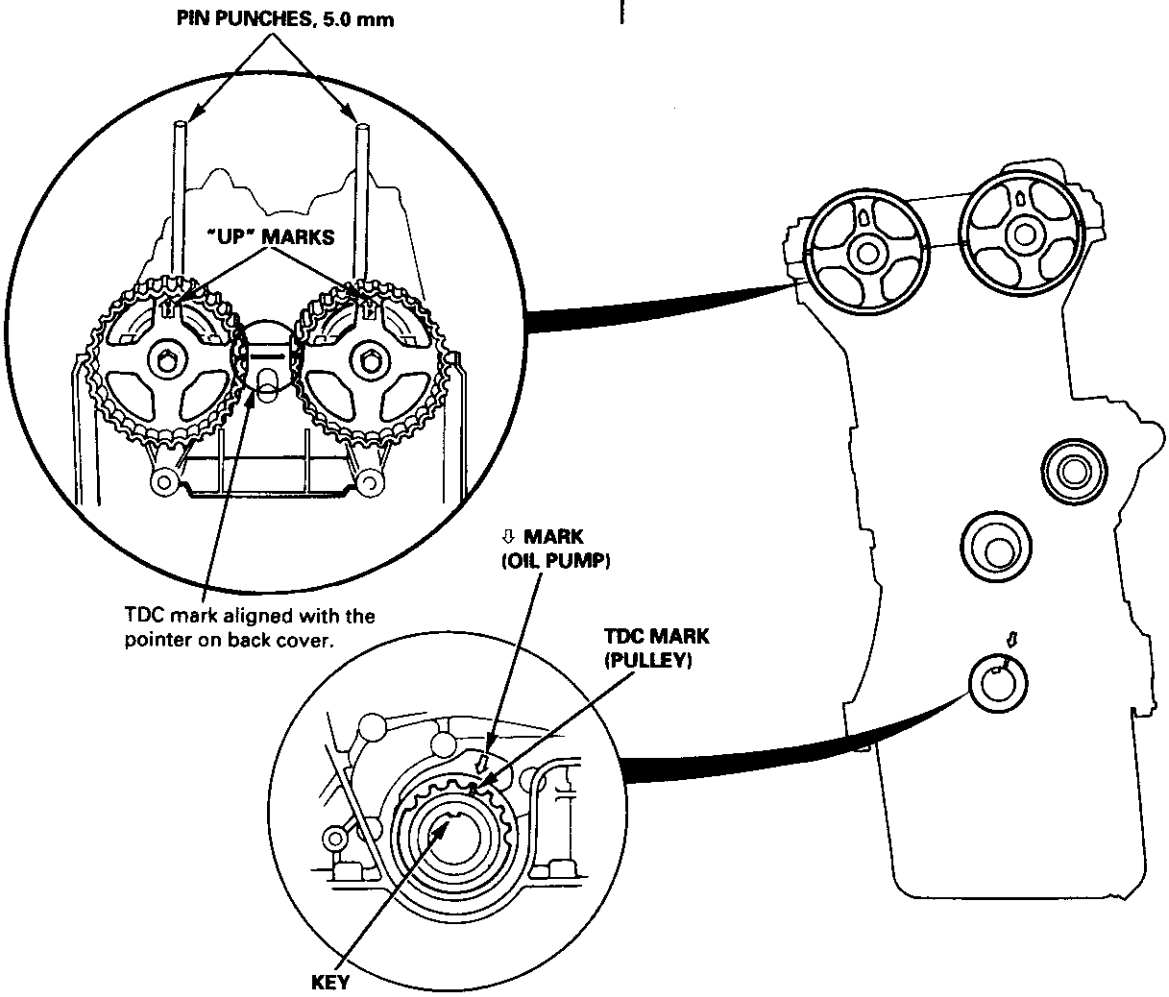

Cylinder Head

Illustrated Index

CAUTION: To avoid damaging the cylinder head, wait until engine coolant temperature drops below 100°F (38°C) before removing it.

NOTE: Use new O-rings and gaskets when reassembling.

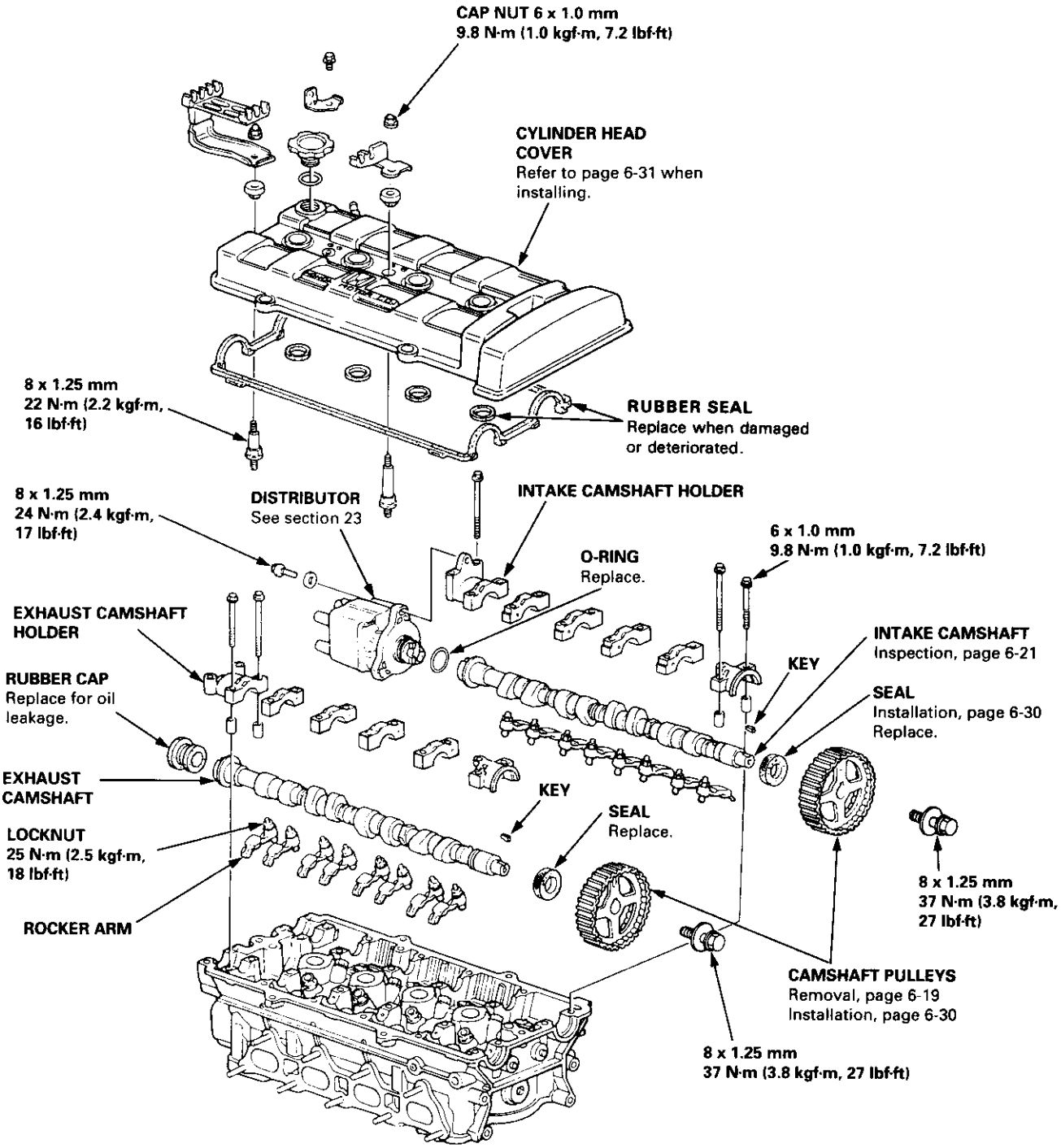

CAUTION: In handling a metal gasket, take care not to fold it or damage the contact surface of the gasket.

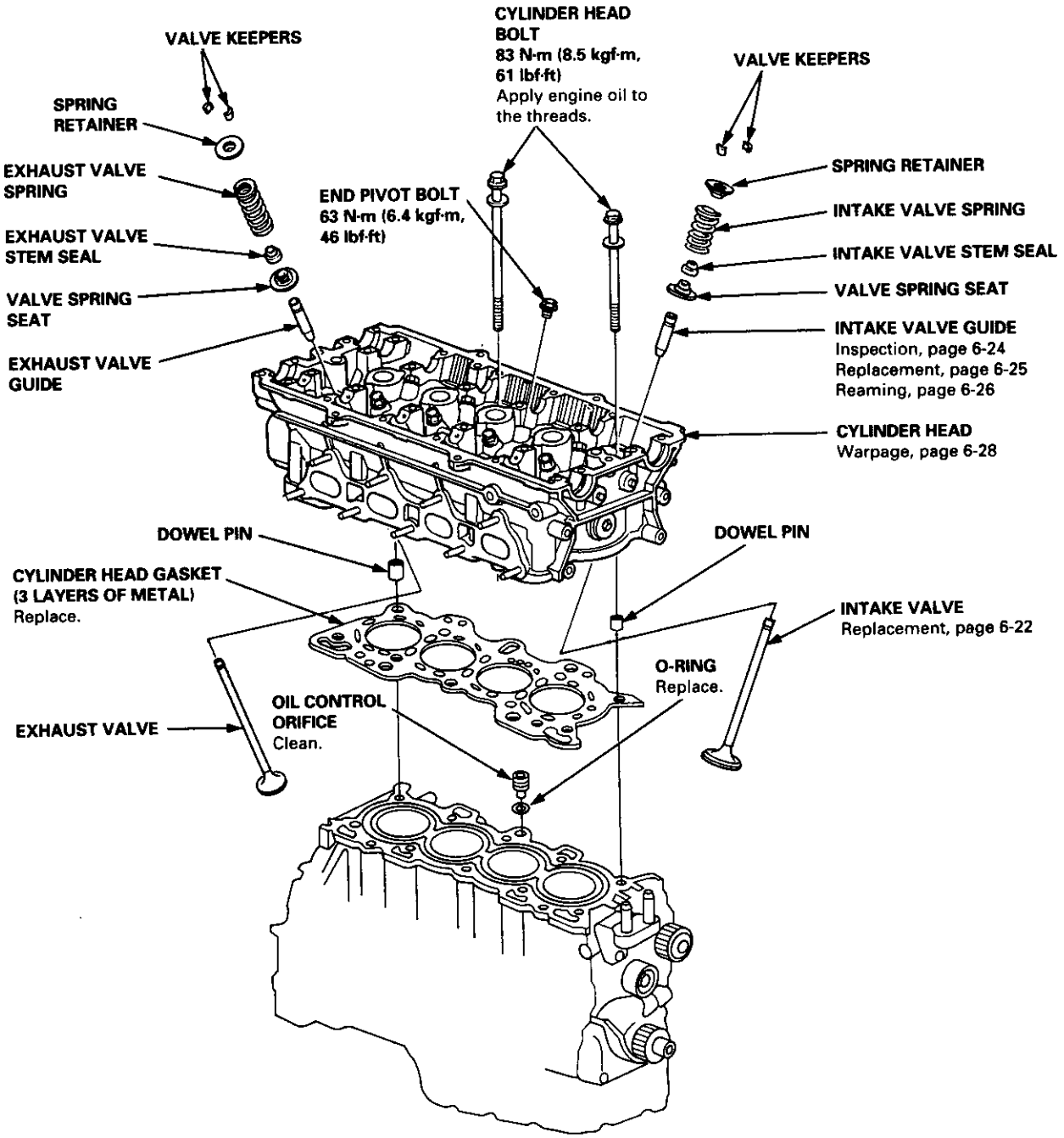

Cylinder Head

Removal

Engine removal is not required for this procedure.

CAUTION: To avoid damaging the cylinder head, wait until the engine coolant temperature drops below 100°F (38°C) before loosening the retaining bolts.

NOTE:
- Inspect the timing belt before removing the cylinder head.
- Turn the crankshaft pulley so that the No. 1 piston is at top dead center (TDC) (page 6-12).
- Mark all emissions hoses before disconnecting them.
- Anti-theft radios have a coded theft protection circuit. Be sure to get the customer's code number before.
  — Disconnecting the battery.
  — Removing the No. 32 (7.5 A) fuse from the under-hood fuse/relay box.
  — Removing the radio.
  After service, reconnect power to the radio and turn it on.
  When the word "CODE" is displayed, enter the customer's 5-digit code to restore radio operation.

1. Disconnect the negative terminal from the battery.

2. Drain the engine coolant (see page 10-5).

   - Remove the radiator cap to speed draining.

3. Relieve fuel pressure (see Section 11).

   ⚠ WARNING Do not smoke while working on fuel system, keep open flame or spark away from work area. Drain fuel only into an approved container.

4. Disconnect the fuel feed hose.

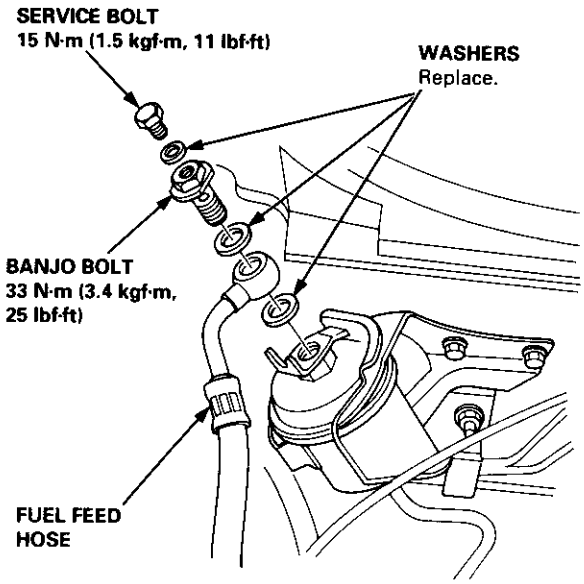

5. Remove the intake air duct.

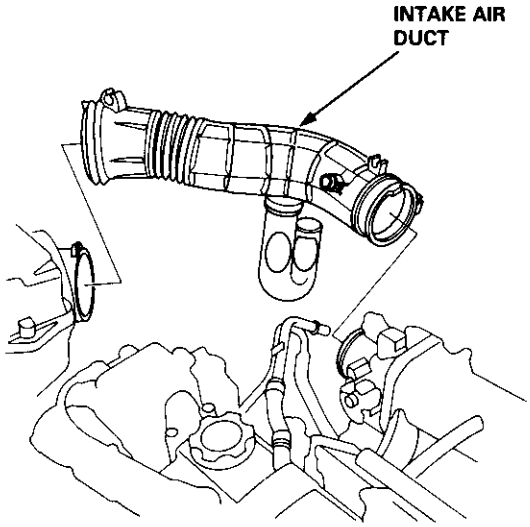

6. Remove the breather hose, water bypass hose and evaporative emission (EVAP) control canister hose.

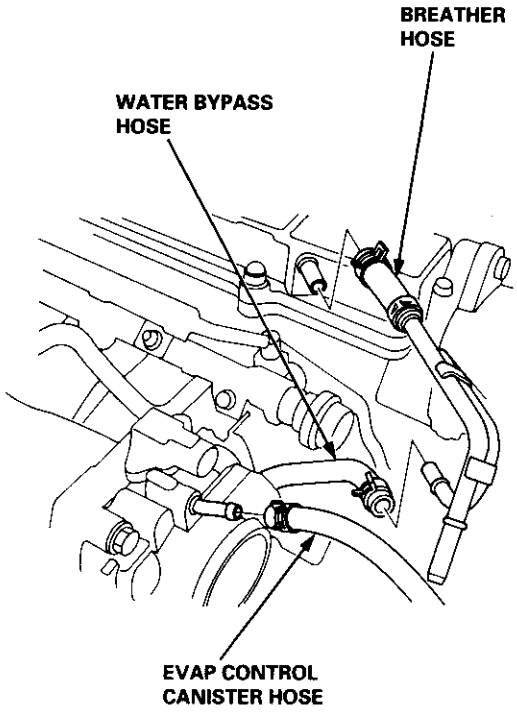

- Remove the fuel return hose and positive crankcase ventilation (PCV) hose.

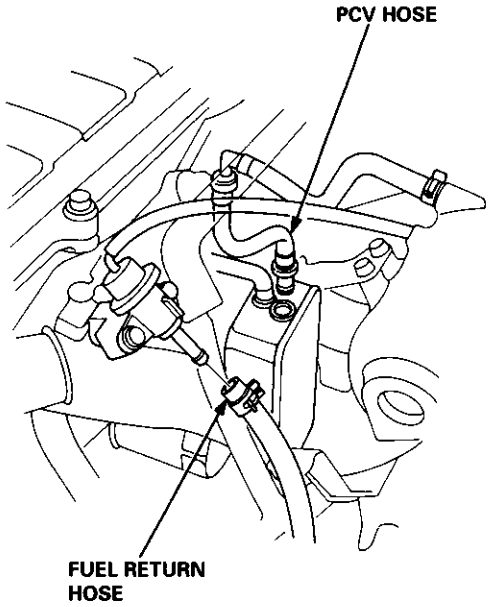

8. Remove the brake booster vacuum hose, water bypass hose and vacuum hose.

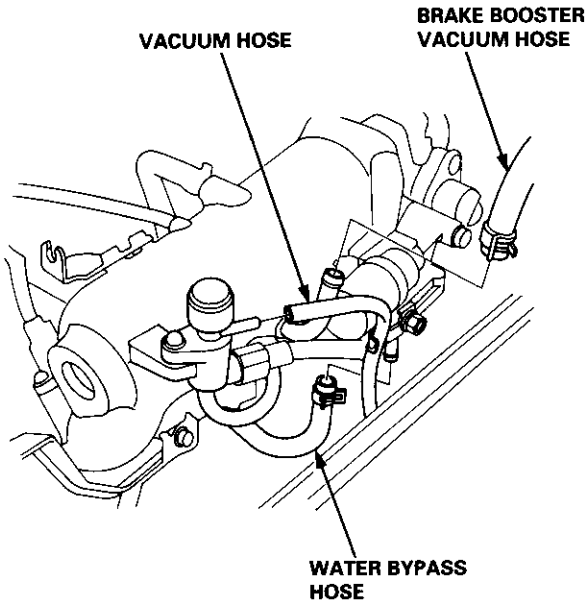

9. Remove the throttle cable.

10. Remove the throttle control cable (automatic transmission only).

NOTE:
- Take care not to bend the cable when removing it. Always replace any kinked cable with a new one.
- Adjust the throttle cable and throttle control cable when installing (see section 11 and 14).

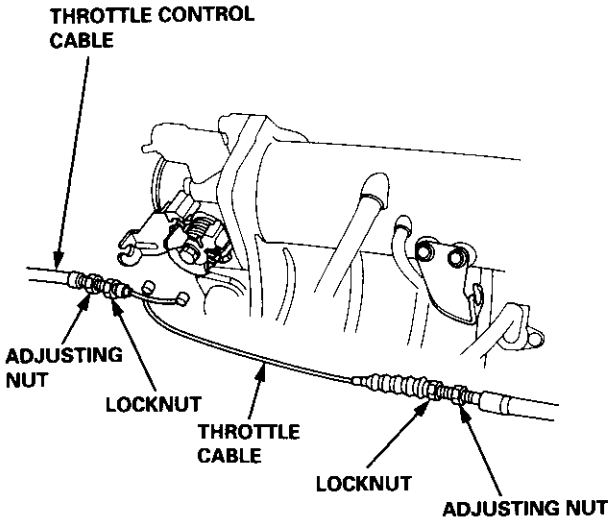

11. Remove the engine wire harness connectors and wire harness clamps from the cylinder head and the intake manifold.

- Four fuel injector connectors
- Intake air temperature (IAT) sensor connector
- Engine coolant temperature (ECT) sensor connector
- TDC/CKP/CYP sensor connector
- Ignition coil connector
- ECT gauge sending unit connector
- Throttle position (TP) sensor connector
- Manifold absolute pressure (MAP) sensor connector
- Idle air control (IAC) valve connector
- EVAP purge control solenoid valve connector

(cont'd)

Removal (cont'd)

12. Remove the spark plug caps and distributor from the cylinder head.

13. Remove the upper radiator hose, heater hose and water bypass hose.

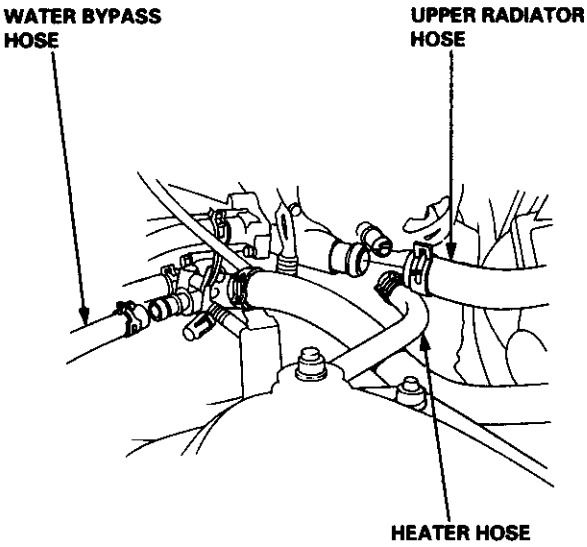

14. Remove the splash shield.

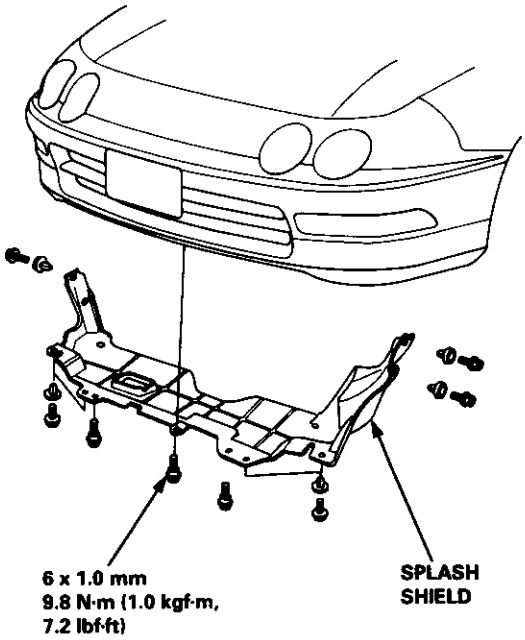

15. Remove the engine ground cable.
Remove the adjusting bolt and mounting bolts, then remove the power steering (P/S) pump belt and P/S pump.

- Do not disconnect the P/S hoses.

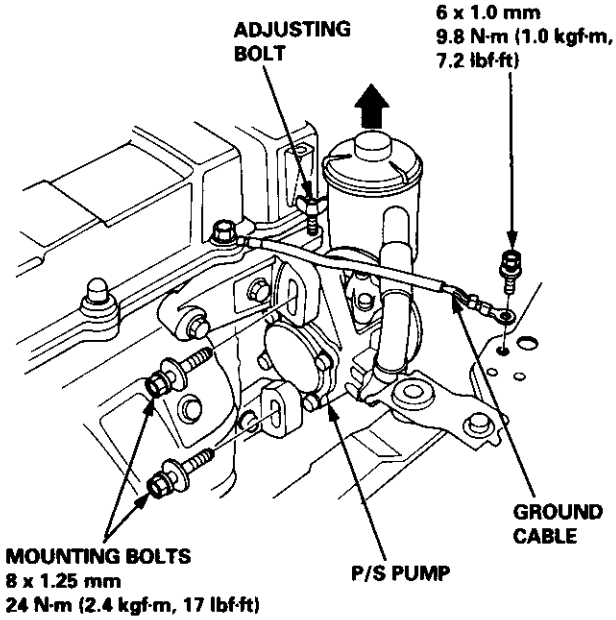

16. Remove the air conditioning (A/C) compressor belt (see page 6-10).

17. Remove the alternator belt (see page 6-10).

18 Remove the cruise control actuator.

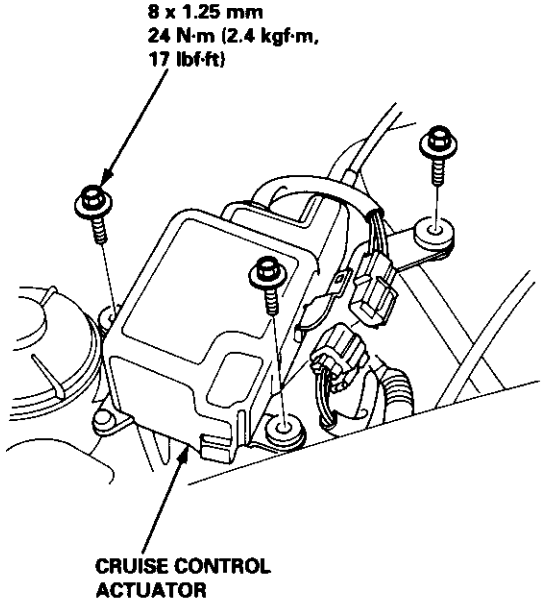

19. Remove the side engine mount.

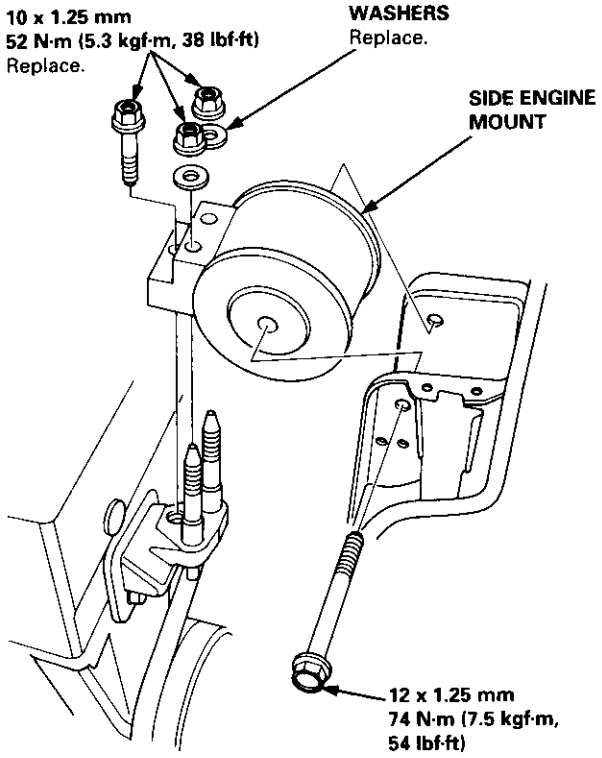

20. Remove the cylinder head cover.

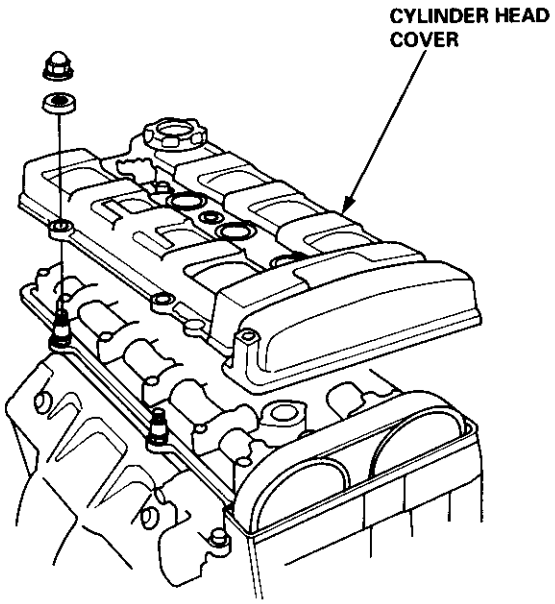

21. Remove the timing belt (see page 6-10).

22. Remove the camshaft pulleys and back cover.

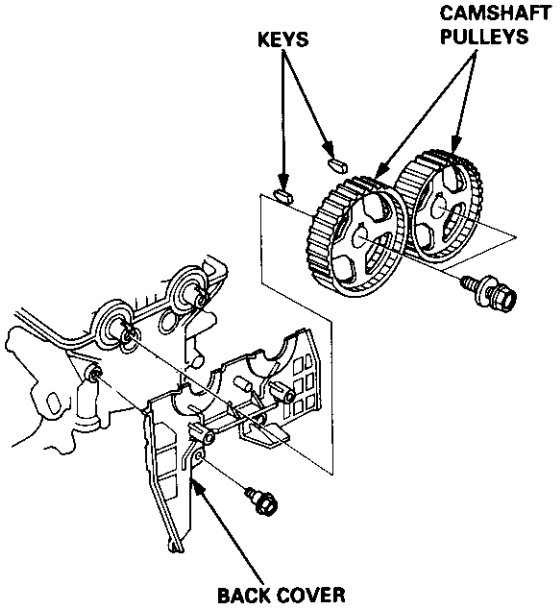

23. Remove the exhaust manifold.

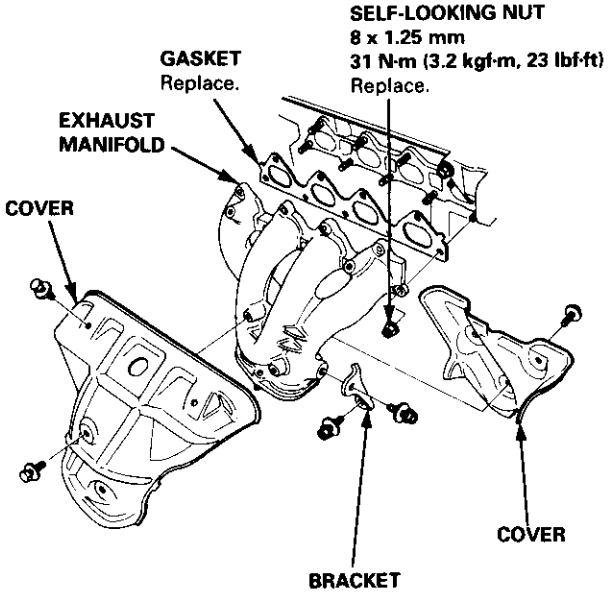

(cont'd)

Removal (cont'd)

24. Remove the intake manifold.

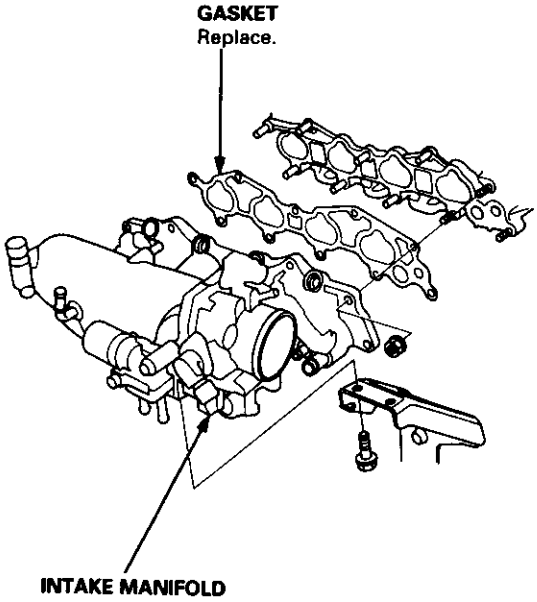

25. Loosen the locknuts and adjusting screws.

ADJUSTING SCREW LOCATIONS:

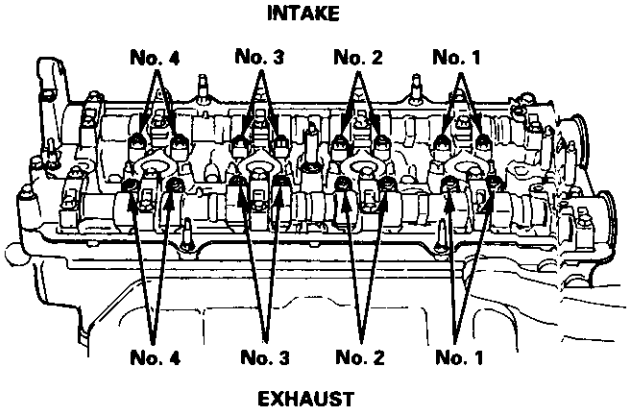

26. Remove the camshaft holder bolts, then remove the camshaft holders, camshafts and rocker arms.

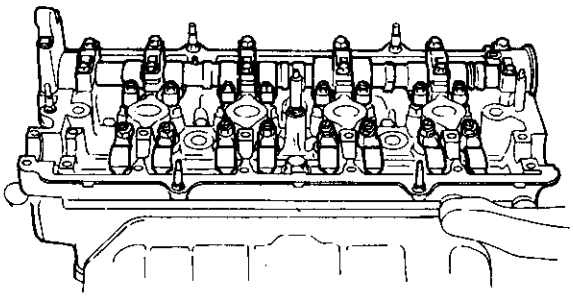

27. Remove the cylinder head bolts, then remove the cylinder head.

CAUTION: To prevent warpage, unscrew the bolts in sequence 1/3 turn at a time; repeat the sequence until all bolts are loosened.

CYLINDER HEAD BOLTS LOOSENING SEQUENCE

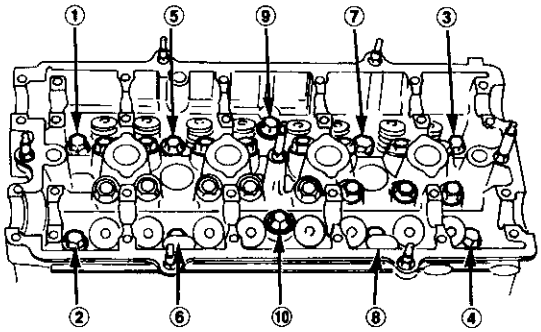

Inspection

1. Loosen the adjusting screws.

2. Remove the camshaft holders and the rocker arms.

   NOTE: Mark the rocker arms before removing them.

3. Reinstall the camshaft and holders. Tighten the camshaft holder bolts in a crisscross pattern, beginning with the inner bolts.
   9.8 N·m (1.0 kgf·m, 7.2 lbf·ft)

4. Seat the camshafts by pushing them toward the distributor end of the head with a screwdriver.

5. Zero the dial indicator against the end of the camshaft, push the camshaft back and forth and read the end play.
   Camshaft End Play:
   Standard (New): 0.05 – 0.15 mm (0.002 – 0.006 in)
   Service Limit: 0.5 mm (0.02 in)

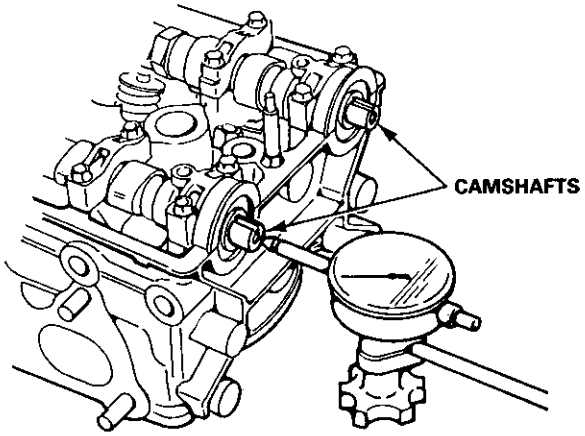

6. Remove the camshaft holder bolts from the cylinder head.

   NOTE: Unscrew the camshaft holder bolts two turns at a time, in a crisscross pattern.

7. Lift the camshafts out of the cylinder head, wipe them clean, then inspect the lift ramps. Replace the camshaft if any lobes are pitted, scored, or excessively worm

8. Clean the camshaft journal surfaces in the cylinder head, then set the camshaft back in place. Insert a plastigage strip across each journal.

9. Install the camshaft holders and torque the bolts to the values and in the sequence shown on page 6-30.

   NOTE: Do not rotate camshafts during inspection.

10. Remove the camshaft holders. Measure the widest portion of plastigage on each journal.

    Camshaft-to Holder Oil Clearance:
    Standard (New): 0.039 – 0.069 mm (0.0015 – 0.0027 in)
    Service Limit: 0.15 mm (0.006 in)

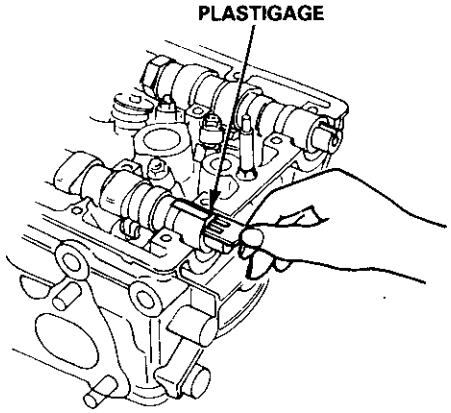

11. If camshaft-to-holder oil clearance is out of tolerance:
    - And the camshaft has already been replaced, you must replace the cylinder head.
    - If the camshaft has not been replaced, first check total runout with the camshaft supported on V-blocks.

    Camshaft Total Runout:
    Standard (New): 0.03 mm (0.001 in) max.
    Service Limit: 0.04 mm (0.002 in)

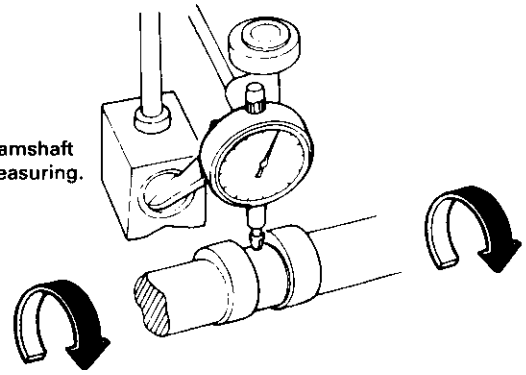

— If the total runout of the camshafts is within tolerance, replace the cylinder head.

— If the total runout is out of tolerance, replace the camshafts and recheck. If the oil clearance is still out of tolerance, replace the cylinder head.

Removal

NOTE: Identify valves and valve springs as they are removed so that each item can be reinstalled in its original position.

1. Tap each valve stem with a plastic mallet to loosen valve keepers before installing the spring compressor.

2. Install the spring compressor. Compress spring and remove valve keeper.

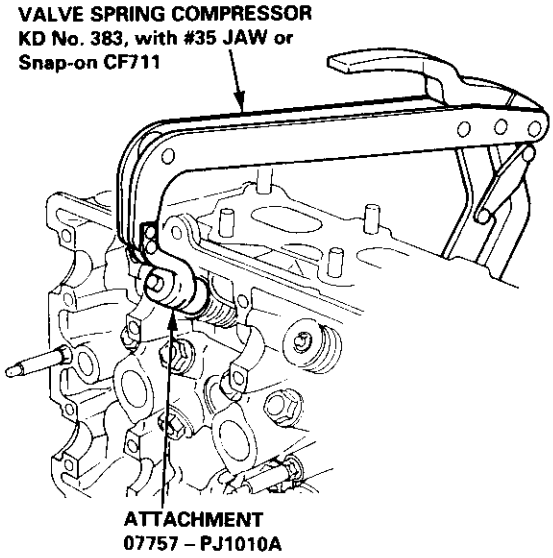

3. Install the special tool as shown.

4. Remove the valve seal.

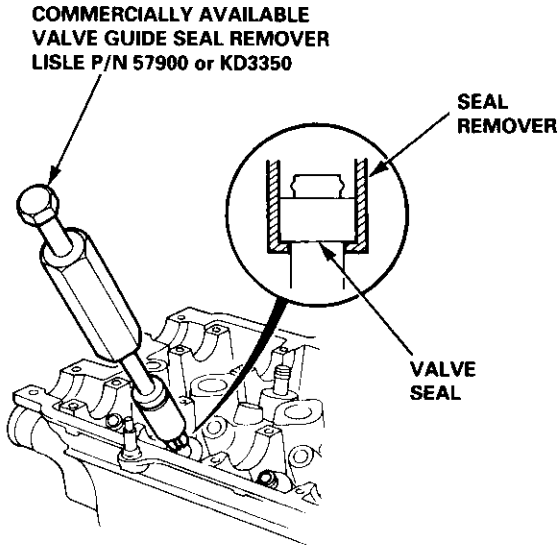

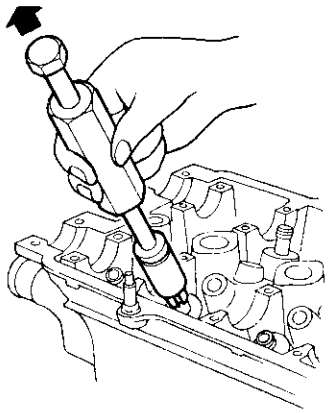

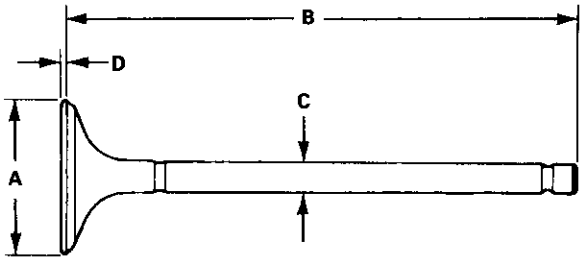

Intake Valve Dimensions

A Standard (New):	30.90 – 31.10 mm (1.217 – 1.224 in)
B Standard (New):	103.80 – 104.10 mm (4.087 – 4.098 in)
C Standard (New):	6.580 – 6.590 mm (0.2591 – 0.2594 in)
C Service Limit:	6.55 mm (0.258 in)
D Standard (New):	1.35 – 1.65 mm (0.053 – 0.065 in)
D Service Limit:	1.15 mm (0.045 in)

Exhaust Valve Dimensions

A Standard (New):	27.90 – 28.10 mm (1.098 – 1.106 in)
B Standard (New):	104.00 – 104.30 mm (4.094 – 4.106 in)
C Standard (New):	6.550 – 6.560 mm (0.2579 – 0.2583 in)
C Service Limit:	6.52 mm (0.257 in)
D Standard (New):	1.65 – 1.95 mm (0.065 – 0.077 in)
D Service Limit:	1.45 mm (0.057 in)

Installation Sequence

NOTE: Exhaust and intake valve seals are NOT interchangeable.

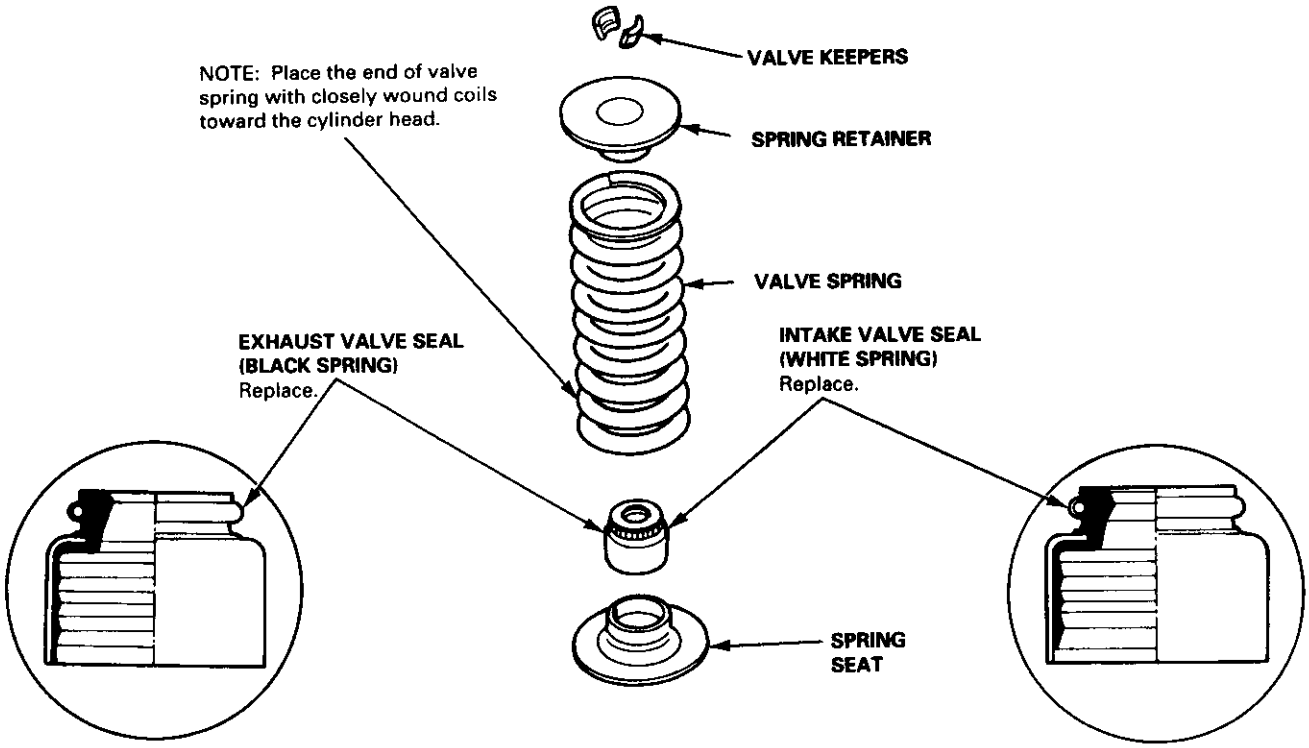

NOTE: Install the valve spring seats before installing the valve seals.

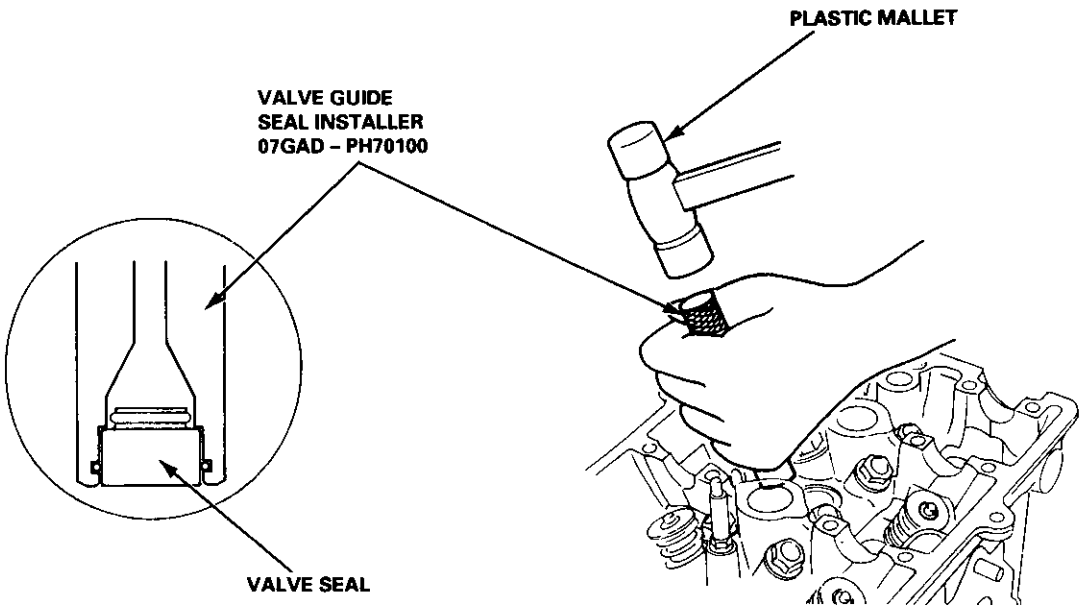

Valves, Valve Springs and Valve Seals

Valve Installation

- When installing valves in the cylinder head, coat valve stems with oil before inserting them into valve guides, and make sure valves move up and down smoothly.
- When valves and springs are in place, lightly tap the end of each valve stem two or three times to ensure proper seating of valves and valve keepers (use plastic mallet).

  NOTE: Tap the valve stem only along its axis so you do not bend the stem.

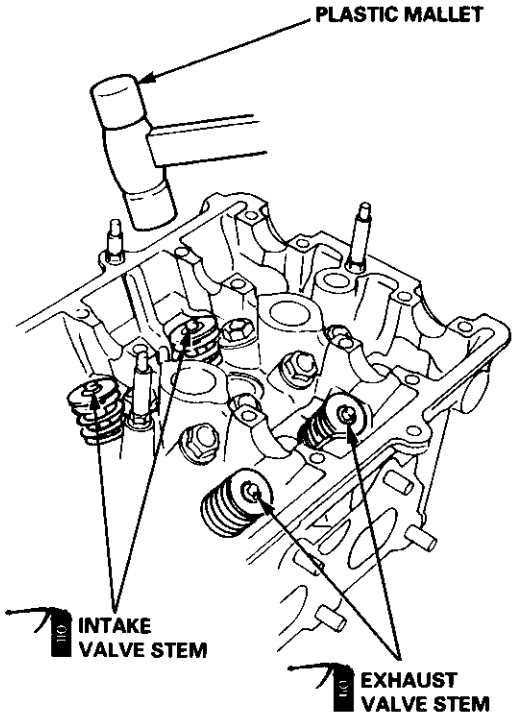

Valve Guides

Valve Movement

Measure the guide-to-stem clearance with a dial indicator while rocking the stem in the direction of normal thrust (wobble method).

Intake Valve Stem-to-Guide Clearance:
Standard (New): 0.04 – 0.10 mm (0.002 – 0.004 in)
Service Limit: 0.16 mm (0.006 in)

Exhaust Valve Stem-to-Guide Clearance:
Standard (New): 0.10 – 0.16 mm (0.004 – 0.006 in)
Service Limit: 0.22 mm (0.009 in)

Valve extended 10 mm out from seat.

- If measurement exceeds the service limit, recheck using a new valve.
- If measurement is now within the service limit, reassemble using a new valve.
- If measurement still exceeds limit, recheck using alternate method below, then replace valve and guide, if necessary.

NOTE: An alternate method of checking guide to stem clearance is to subtract the O.D. of the valve stem, measured with a micrometer, from the I.D. of the valve guide, measured with an inside micrometer or ball gauge.
Take the measurements in three places along the valve stem and three places inside the valve guide.
The difference between the largest guide measurement and the smallest stem measurement should not exceed the service limit

Intake Valve Stem-to-Guide Clearance:
Standard (New): 0.02 – 0.05 mm (0.001–0.002 in)
Service Limit: 0.08 mm (0.003 in)

Exhaust Valve Stem-to-Guide Clearance:
Standard (New): 0.05 – 0.08 mm (0.002 – 0.003 in)
Service Limit: 0.11 mm (0.004 in)

Replacement

1. As illustrated in the removal steps of this procedure, use a commercially-available air-impact driver attachment modified to fit the diameter of the valve guides. In most cases, the same procedure can be done using the Valve Guide Driver and a conventional hammer.

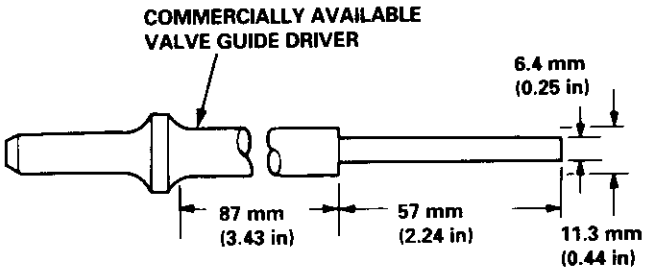

Removal and Installation
VALVE GUIDE DRIVER, 6.6 mm
07942 – 6570100

2. Select the proper replacement guides and chill them in the freezer section of a refrigerator for about an hour.

3. Use a hot plate or oven to evenly heat the cylinder head to 300°F (150°C). Monitor the temperature with a cooking thermometer.

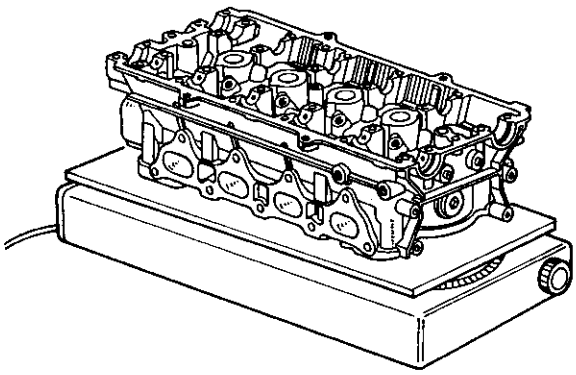

CAUTION:
- **Do not use a torch; it may warp the head.**
- **Do not get the head hotter than 300°F (150°C); excessive heat may loosen the valve seats.**
- **To avoid burns, use heavy gloves when handling the heated cylinder head.**

4. Working from the camshaft side, use the driver and an air hammer to drive the guide about 2 mm (0.1 in) towards the combustion chamber. This will knock off some of the carbon and make removal easier.

CAUTION:
- **Always wear safety goggles or a face shield when using the air hammer.**
- **Hold the air hammer directly in line with the valve guide to prevent damaging the driver.**

5. Turn the head over and drive the guide out toward the camshaft side of head.

If a valve guide still won't move, drill it out with a 8 mm (5/16 in) bit, then try again.

CAUTION: Drill guides only in extreme cases: You could damage the cylinder head if the guide breaks.

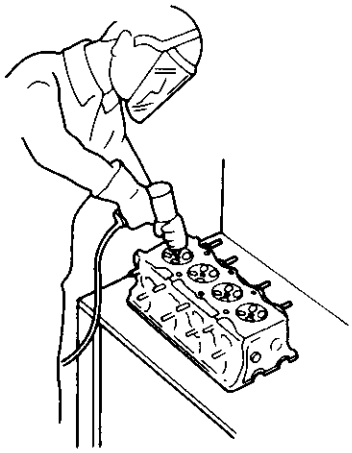

VALVE GUIDE DRIVER, 6.6 mm
07942 – 6570100

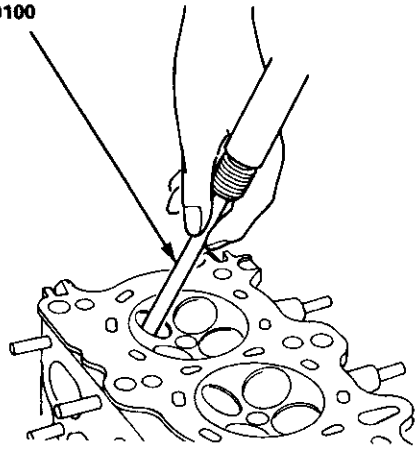

6. Remove the new guide(s) from the refrigerator, one at a time, as you need them.

(cont'd)

Valve Guides

Replacement (cont'd)

7. Slip a 6.5 mm (0.25 in) steel washer and the correct driver attachment over the end of the driver (The washer will absorb some of the impact and extend the life of the driver).

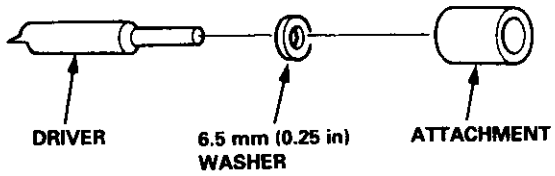

8. Install the new guide(s) from the camshaft side of the head; drive each one in until the attachment bottoms on the head. If you have all sixteen guides to do, you may have to reheat the head one or two more times.

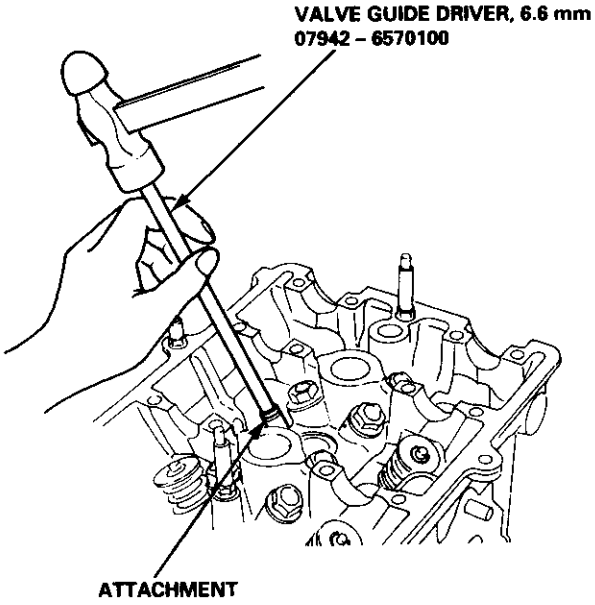

Valve Guide Installed Height:

Intake:	**13.75 - 14.25 mm (0.541 - 0.561 in)**
Exhaust:	**15.75 - 16.25 mm (0.620 - 0.640 in)**

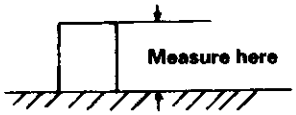

Reaming

NOTE: For new valve guides only.

1. Coat both reamer and valve guide with cutting oil.
2. Rotate the reamer clockwise the full length of the valve guide bore.
3. Continue to rotate the reamer clockwise while removing it from the bore.
4. Thoroughly wash the guide in detergent and water to remove any cutting residue.
5. Check clearance with a valve (see page 6-24).
   - Verify that the valve slides in the intake and exhaust valve guides without exerting pressure.

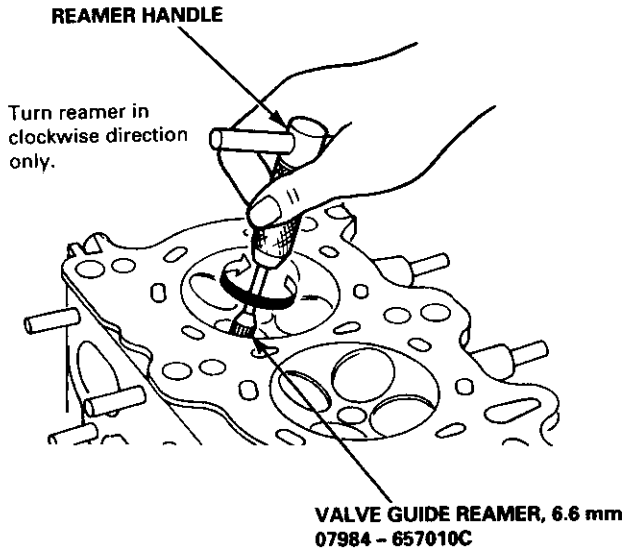

Valve Seats

Reconditioning

1. Renew the valve seats in the cylinder head using a valve seat cutter.

   NOTE: If guides are worn (see page 6-24), replace them (see page 6-25) before cutting the valve seats.

2. Carefully cut a 45° seat, removing only enough material to ensure a smooth and concentric seat.

3. Bevel the upper edge of the seat with the 30° cutter and the lower edge of the seat with the 60° cutter. Check width of seat and adjust accordingly.

4. Make one more very light pass with the 45° cutter to remove any possible burrs caused by the other cutters.

   Valve Seat Width (Intake and Exhaust):
   Standard: 1.25 – 1.55 mm (0.049 – 0.061 in)
   Service Limit: 2.0 mm (0.08 in)

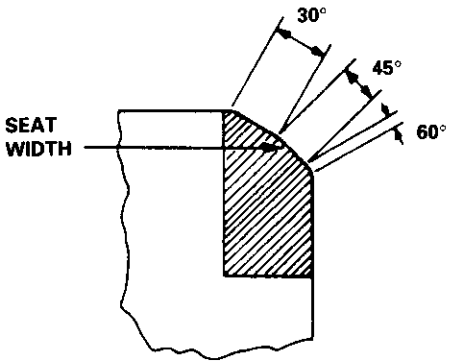

5. After resurfacing the seat, inspect for even valve seating: Apply Prussian Blue compound to the valve face, and insert valve in original location in the head, then lift it and snap it closed against the seat several times.

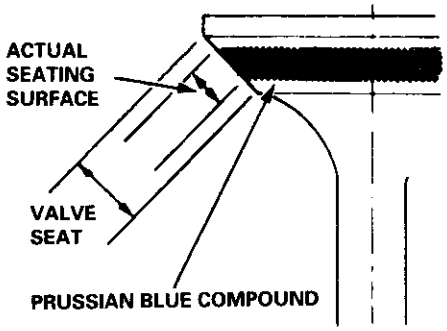

6. The actual valve seating surface, as shown by the blue compound, should be centered on the seat.

   - If it is too high (closer to the valve stem), you must make a second cut with the 60° cutter to move it down, then one more cut with the 45° cutter to restore seat width.
   - If it is too low (closer to the valve edge), you must make a second cut with the 30° cutter to move it up, then one more cut with the 45° cutter to restore seat width.
     NOTE: The final cut should always be made with the 45° cutter.

7. Insert intake and exhaust valves in the head and measure valve stem installed height.

   Intake Valve Stem Installed Height:
   Standard (New): 40.765 – 41.235 mm (1.6049 – 1.6234 in)
   Service Limit: 41.485 mm (1.6333 in)
   Exhaust Valve Stem Installed Height:
   Standard (New): 42.765 – 43.235 mm (1.6837 – 1.7022 in)
   Service Limit: 43.485 mm (1.7120 in)

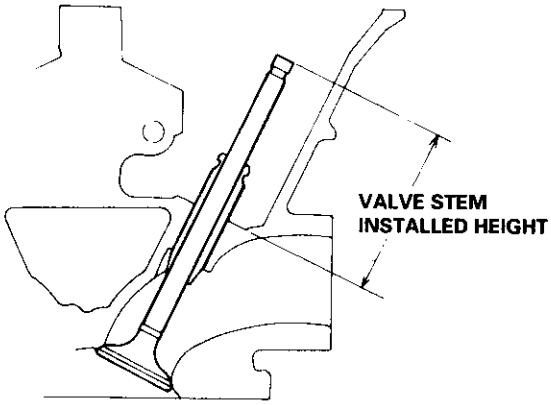

8. If valve stem installed height is over the service limit, replace valve and recheck. If still over the service limit, replace cylinder head; the valve seat in the head is too deep.

Cylinder Head

Warpage

NOTE: If camshaft-to-holder oil clearances (see page 6-21) are not within specification, the head cannot be resurfaced.

If camshaft-to-holder oil clearances are within specifications, check the head for warpage.

- If warpage is less than 0.05 mm (0.002 in) cylinder head resurfacing is not required.
- If warpage is between 0.05 mm (0.002 in) and 0.2 mm (0.008 in), resurface cylinder head.
- Maximum resurface limit is 0.2 mm (0.008 in) based on a height of 132.0 mm (5.20 in).

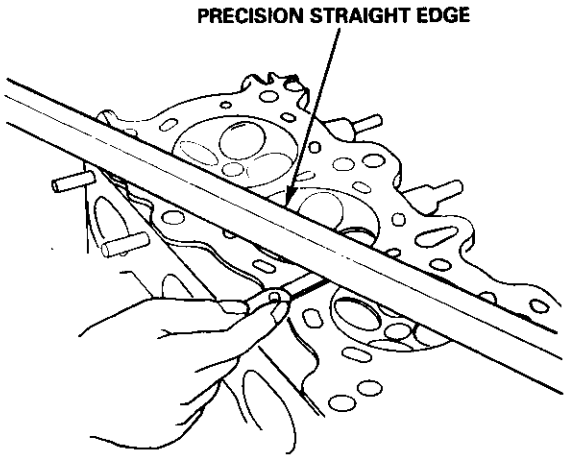

Measure along edges, and 3 ways across center.

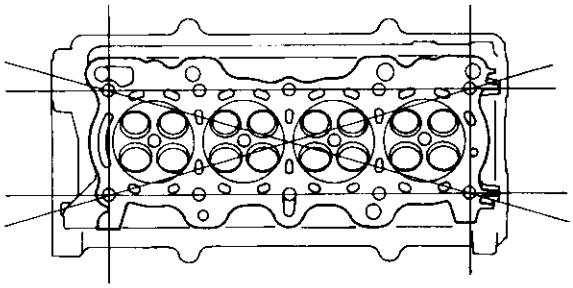

Cylinder Head Height:
Standard (New): 131.95 – 132.05 mm (5.195 – 5.199 in)

Installation

Install the cylinder head in the reverse order of removal:
NOTE:
- Always use a new head gasket.
- Cylinder head and cylinder block surface must be clean.
- "UP" mark on the timing belt pulleys should be at the top.
- Do not use the middle cover and lower cover for storing items disassembled.
- Clean the middle cover and lower cover before installation.
- Replace the washer when damaged or deteriorated.

1. Cylinder head dowel pins and the oil control orifice must be aligned.
   NOTE:
   - When handling a metal gasket, care should be taken not to fold it or damage the contact surface of the gasket.
   - Clean the oil control orifice when installing.

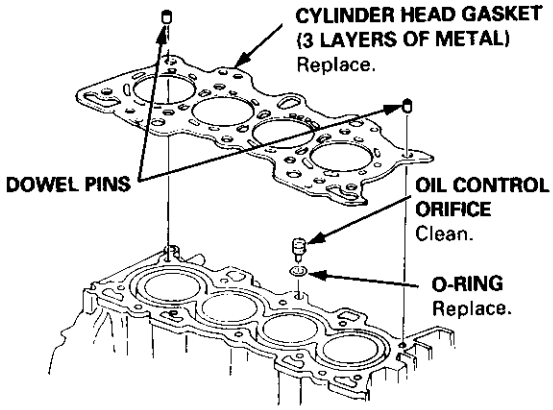

2. Tighten the cylinder head bolts in two steps. In the first step tighten all bolts, in sequence, to about 29 N·m (3.0 kgf·m, 22 lbf·ft); in the final step, tighten in the same sequence to 83 N·m (8.5 kgf·m, 61 lbf·ft).
   NOTE:
   - Apply engine oil to the cylinder head bolts and the washers.
   - Use the longer bolts at positions No. 1 and No. 2 as shown.

   CYLINDER HEAD BOLTS TORQUE SEQUENCE

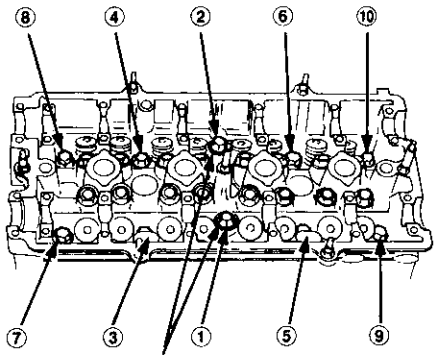

NOTE: Put longer bolts here.

3. Install the intake manifold and tighten the nuts in a crisscross pattern in 2 or 3 steps, beginning with the inner nuts.

   CAUTION: Check for folds or scratches on the surface of the gasket. Replace with a new gasket if damaged.

4. Tighten the intake manifold bracket bolts.

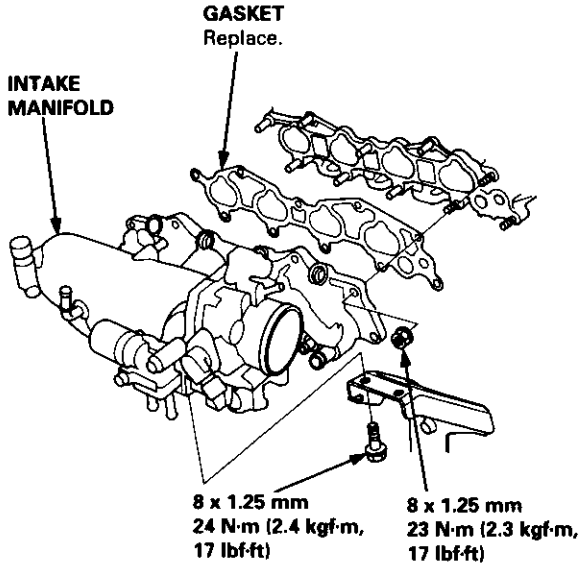

5. Install the exhaust manifold and tighten the new self-locking nuts in a crisscross pattern in 2 or 3 steps, beginning with the inner nuts.
   - Use new self-locking nuts.

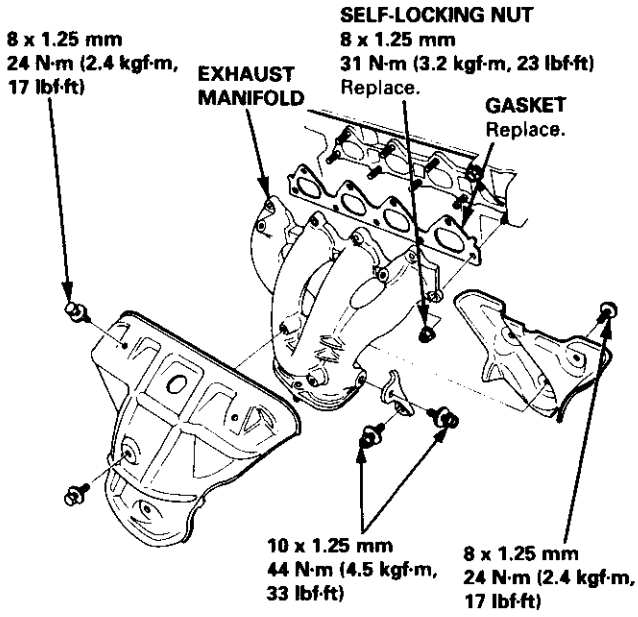

CAUTION:
- **Make sure that the keyways on the camshafts are facing up and No. 1 piston is at top dead center (TDC).**
- **Replace the rocker arms in their original positions.**

6. Place the rocker arms on the pivot bolts and the valve stems.

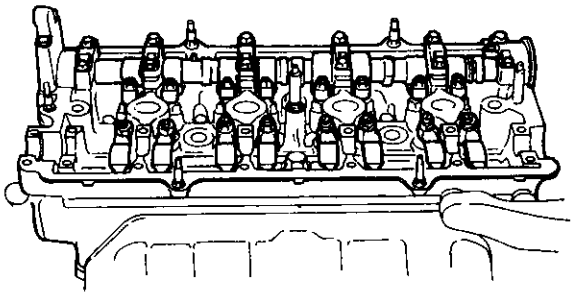

7. Install the camshafts, then install the camshaft seals with the open side (spring) facing in.

8. Apply liquid gasket around the rubber cap, then install the rubber cap.

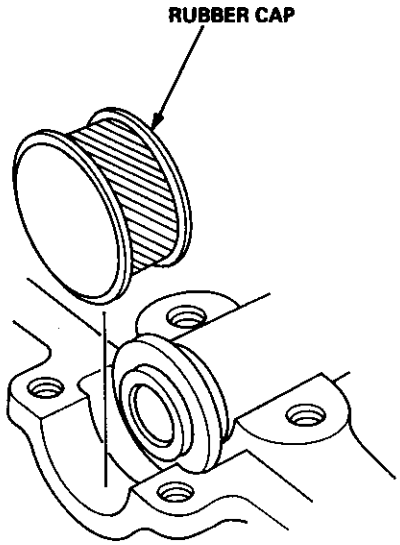

(cont'd)

Installation (cont'd)

9. Apply liquid gasket to the head mating surfaces of the No. 1 and No. 6 camshaft holders, then install them, along with No. 2, 3, 4, and 5.

   NOTE:
   - "I" or "E" marks are stamped on the camshaft holders.
   - Do not apply oil to the holder mating surface of camshaft seals.
   - Apply liquid gasket to the shaded areas.
   - The arrows marked on the camshaft holders should point to the timing belt.

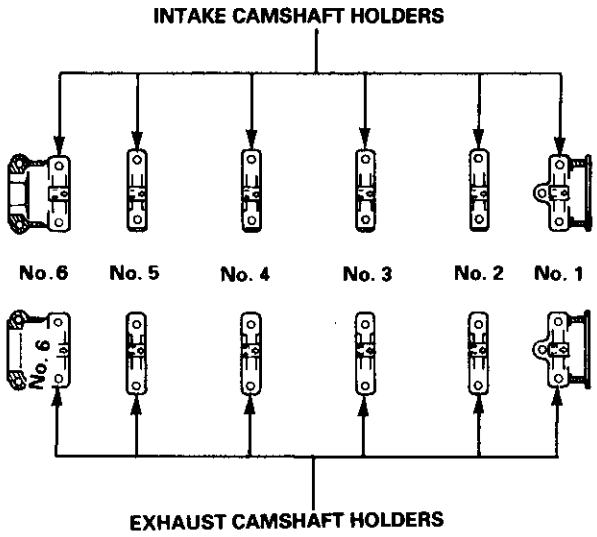

10. Tighten the camshaft holders temporarily.

    - Make sure that the rocker arms are properly positioned on the valve stems.

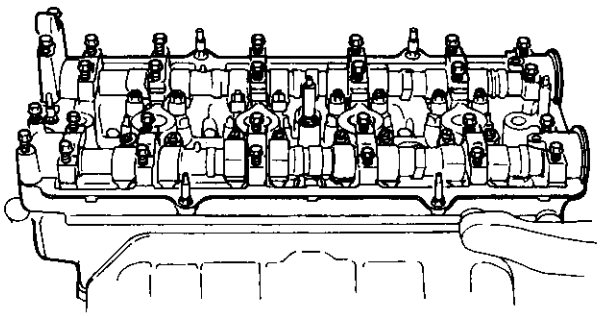

11. Tighten each bolt in two steps to ensure that the rockers do not bind on the valves.

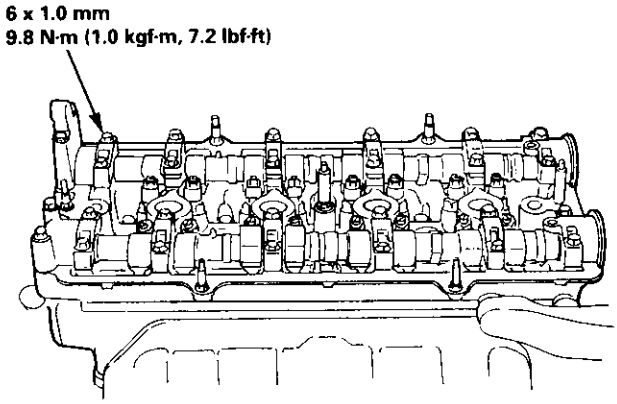

12. Install keys into camshaft grooves.

    NOTE: To set the camshafts at TDC position for No. 1 piston, align the holes in the camshafts with the holes in No. 1 camshaft holders and insert 5.0 mm pin punches in the holes.

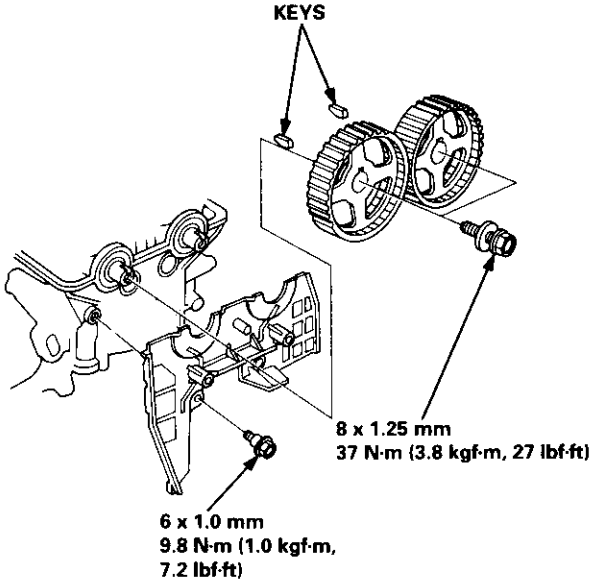

13. Push camshaft pulleys onto camshafts, then tighten the retaining bolts to the torque specified.

14. Install the timing belt (see page 6-12).

15. Adjust the valve clearance (see page 6-3).

16. Install the rubber seal in the groove of the cylinder head cover. Seat the seal in the recesses for the camshaft first, then work it into the groove around the outside edges.

    NOTE:
    - Before installing the rubber seal, thoroughly clean the seal and the groove.
    - When installing, make sure the seal is seated securely in the corners of the recesses with no gap.

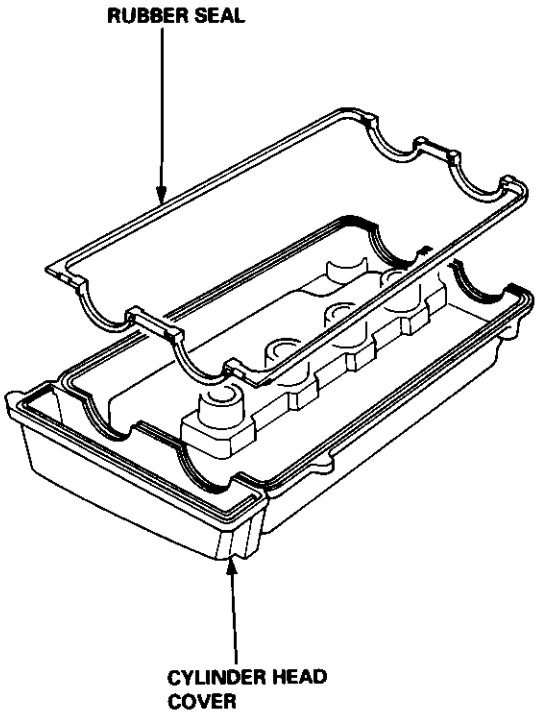

17. Apply liquid gasket to the rubber seal at the eight corners of the recesses.

    NOTE:
    - Use liquid gasket, Part No. 08718 – 0001.
    - Check that the mating surfaces are clean and dry before applying liquid gasket.
    - Do not install the parts if 20 minutes or more have elapsed since applying liquid gasket. Instead, reapply liquid gasket after removing old residue.
    - After assembly, wait at least 20 minutes before filling the engine with oil.

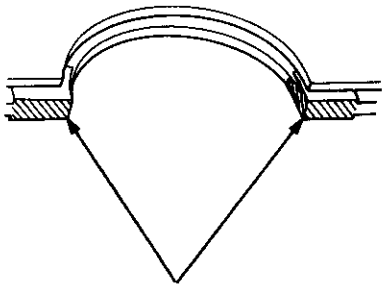

Apply liquid gasket to the shaded areas.

(cont'd)

Installation (cont'd)

18. When installing the cylinder head cover, hold the rubber seal in the groove by placing your fingers on the camshaft contacting surfaces (top of the semi-circles).
    Once the cylinder head cover is on the cylinder head, slide the cover slightly back and forth to seat the rubber seal.

    NOTE:
    - Before installing the cylinder head cover, clean the cylinder head contacting surfaces using a shop towel.
    - Do not touch the parts where liquid gasket was applied.

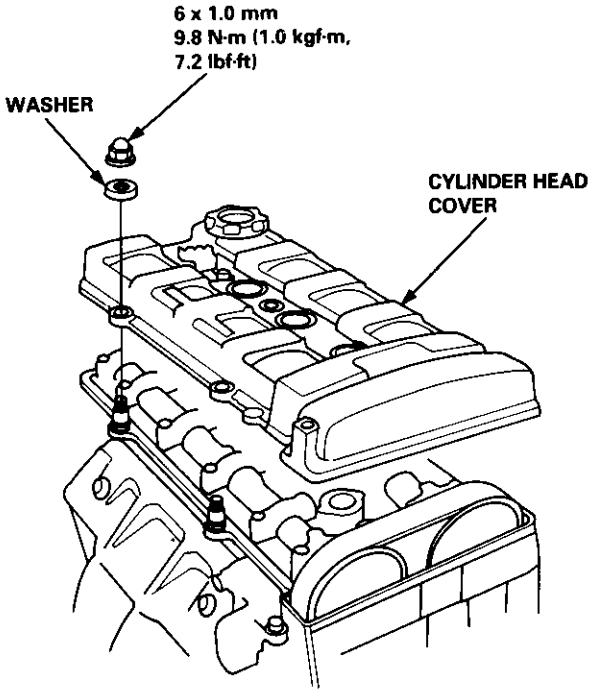

19. Tighten the nuts in 2 or 3 steps. In the final step, tighten all nuts, in sequence, to 9.8 N·m (1.0 kgf·m, 7.2 lbf·ft).

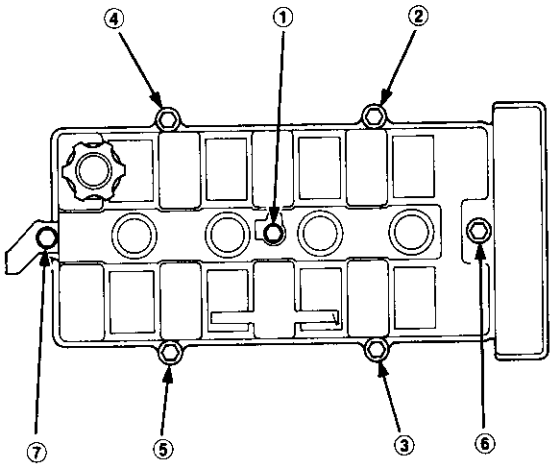

20. After installing, check that all tubes, hoses and connectors are installed correctly.

Cylinder Head/Valve Train
B18C1 engine

Special Tools 6-34
VTEC
  Troubleshooting Flowchart
    VTEC Solenoid Valve 6-36
    VTEC Pressure Switch 6-38
  VTEC Solenoid Valve Inspection 6-41
  Rocker Arms
    Manual Inspection 6-42
    Inspection Using Special Tools 6-43
Valve Clearance
  Adjustment 6-44
Timing Belt
  Illustrated Index 6-46
  Inspection 6-48
  Tension Adjustment 6-48
  Removal 6-49
  Installation 6-51
Crankshaft Pulley Bolt
  Replacement 6-47
Cylinder Head
  Illustrated Index 6-53
  Removal 6-55
  Warpage 6-74
  Installation 6-75
Rocker Arms
  Removal 6-60
  Location 6-61
  Inspection 6-62
  Arm-to-Shaft Clearance 6-63
  Installation 6-64
Camshafts
  Inspection 6-65
Valve Guides
  Valve Movement 6-70
  Replacement 6-71
  Reaming 6-72
Valve Seals
  Reconditioning 6-73
Valves, Valve Springs and Valve Seals
  Removal 6-67
  Installation Sequence 6-69
  Valve Installation 6-70

Special Tools

Ref. No.	Tool Number	Description	Qty	Page Reference
①	07HAH – PJ7010A or 07HAH – PJ7010B	Valve Guide Reamer, 5.5 mm	1	6-72
②	07JAB – 001020A	Holder Handle	1	6-47
③	07LAA – PR30100	Tappet Adjuster Wrench	1	6-45
④	07LAJ – PR3020A	Air Stopper	1	6-43
⑤	07MAB – PY3010A	Pulley Holder Attachment, HEX 50 mm, Offset	1	6-47
⑥	07MAF – PR9010A	Valve Spring Compressor Attachment Extension	1	6-67
⑦	07742 – 0010100	Valve Guide Driver, 5.5 mm	1	6-71, 72
⑧	07757 – PJ1010A	Valve Spring Compressor Attachment	1	6-67

①

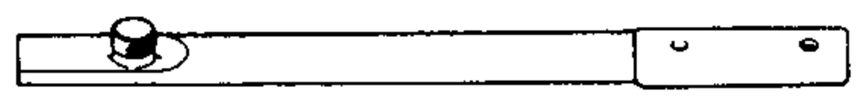

②

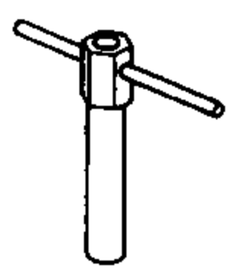

③

④

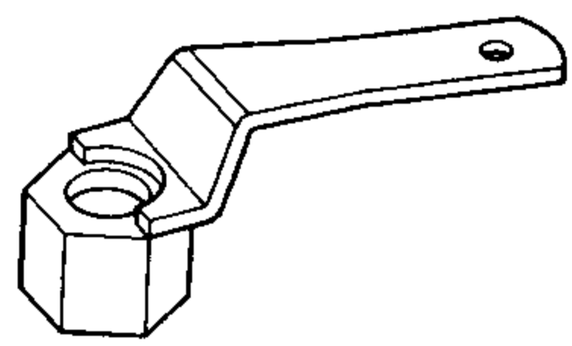

⑤

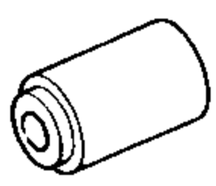

⑥

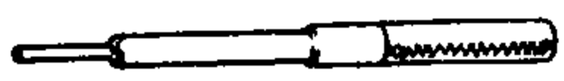

⑦

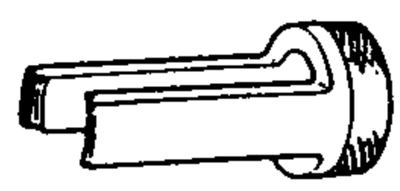

⑧

Troubleshooting Flowchart — VTEC Solenoid Valve

Refer to page 11-32 thru 11-39 before troubleshooting.

Malfunction Indicator Lamp (MIL) indicates Diagnostic Trouble Code (DTC) 21: A problem in the VTEC Solenoid Valve circuit.

— MIL has been reported on.
— With service check connector jumped, Code 21 is indicated.

Do the engine control module (ECM) Reset Procedure.

Start the engine.

Warm up engine to normal operating temperature (the cooling fan comes on).

Do the Road Test.*

* Road Test:
Accelerate in 1st gear to an engine speed over 6000 rpm.
Hold that engine speed for at least two seconds.
If the MIL does not come on during the first road test, repeat this test two more times.

Is MIL on and does it indicate code 21?

NO → **Intermittent failure, system is OK at this time. Check for poor connections or loose wires at VTEC solenoid valve and ECM.**

YES

Turn the ignition switch OFF.

Disconnect the 1P connector from the VTEC solenoid valve.

Check for continuity between 1P connector terminal and body ground.

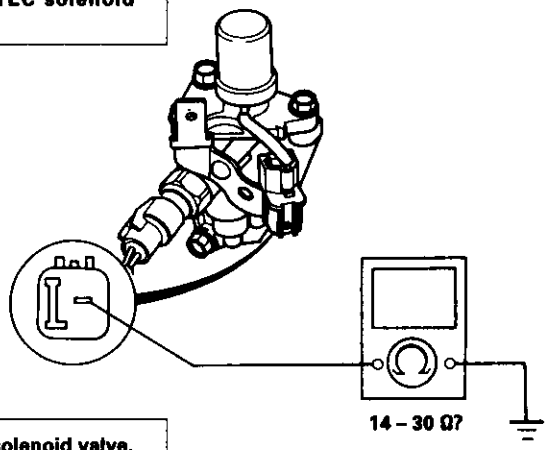

Is there 14 – 30 Ω?

NO → **Replace the VTEC solenoid valve.**

YES

(To page 6-37)

(From page 6-36)

Connect the test harness.

Check for continuity between 1P connector terminal and A4 terminal.

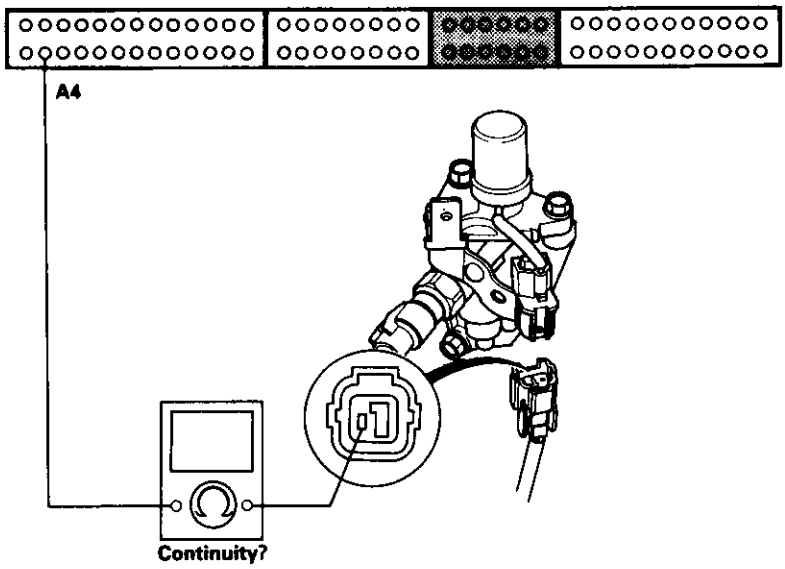

Is there continuity?

NO → **Repair open in the GRN/YEL wire between ECM (A4) and VTEC solenoid valve connector.**

YES

Check for continuity between 1P connector terminal (harness side) and body ground.

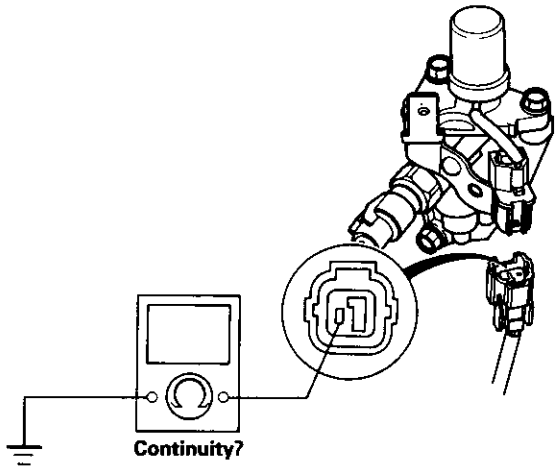

Is there continuity?

YES → **Repair short in the GRN/YEL wire between ECM (A4) and VTEC solenoid valve connector.**

NO

Substitute a known-good ECM and recheck. If symptom/indication goes away replace the original ECM.

Troubleshooting Flowchart — VTEC Pressure Switch

Refer to page 11-32 thru 11-39 before troubleshooting.

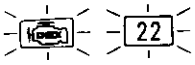

Malfunction Indicator Lamp (MIL) indicates Diagnostic Troubles Code (DTC) 22: A problem in the VTEC Pressure Switch circuit.

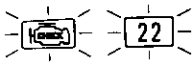

— MIL has been reported on.
— With service check connector jumped, code 22 is indicated.

Do the engine control module (ECM) Reset Procedure.

Start the engine.

Warm up engine to normal operating temperature (cooling fan comes on).

Do the Road Test.*

* Road Test:
Accelerate in 1st gear to an engine speed over 6000 rpm.
Hold that engine speed for at least two seconds.
If the MIL does not come on during the first road test, repeat this test two more times.

Is MIL on and does it indicate code 22?

NO → **Intermittent failure, system is OK at this time. Check for poor connections or loose wires at VTEC pressure switch and ECM.**

YES

Turn the ignition switch OFF.

Disconnect the 2P connector from the VTEC pressure switch.

Check for continuity between BLK terminal and body ground.

Is there continuity?

NO → **Repair open in BLK wire between 2P connector and body ground (G101).**

YES

Connect the test harness.

Check for continuity between BLU/BLK terminal and D6 terminal.

(To page 6-39)

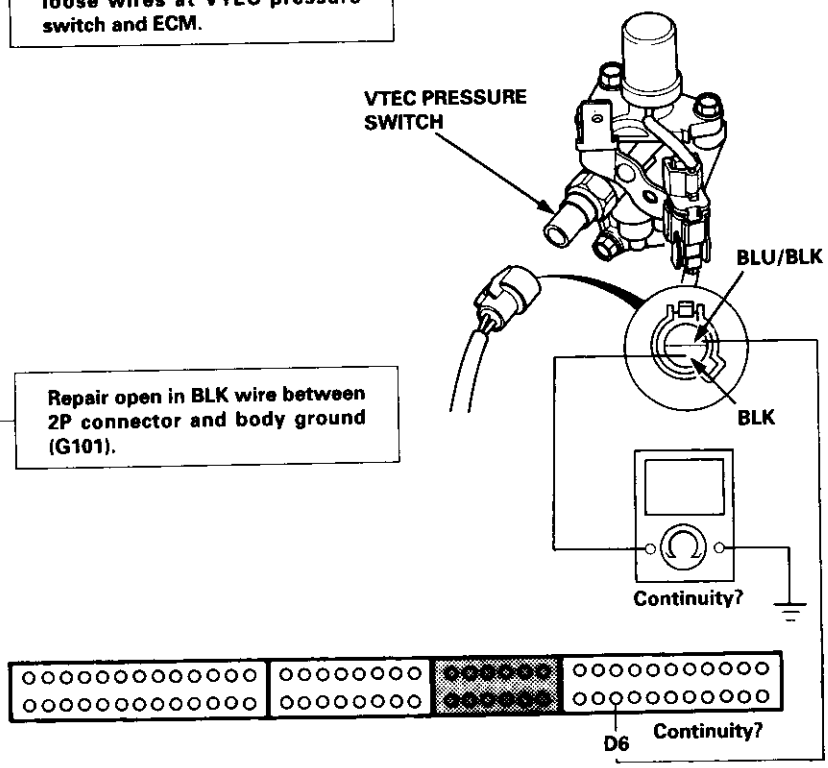

(From page 6-38)

Is there continuity?

NO → **Repair open in BLU/BLK wire between ECM (D6) and 2P connector.**

YES

Check for continuity between D6 terminal and body ground.

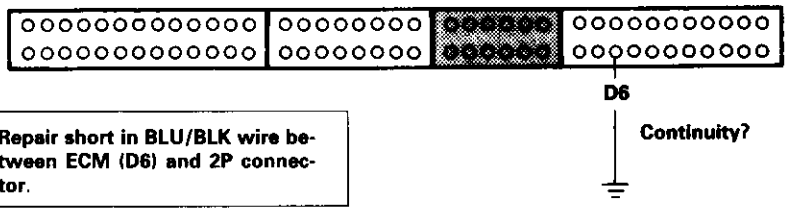

Is there continuity?

YES → **Repair short in BLU/BLK wire between ECM (D6) and 2P connector.**

NO

Remove 10 mm sealing bolt and connect oil pressure gauge.

GAUGE JOINT ADAPTER SNAP-ON MT26-17
10 x 1.0 mm
- Use new washer when installing the sealing bolt.

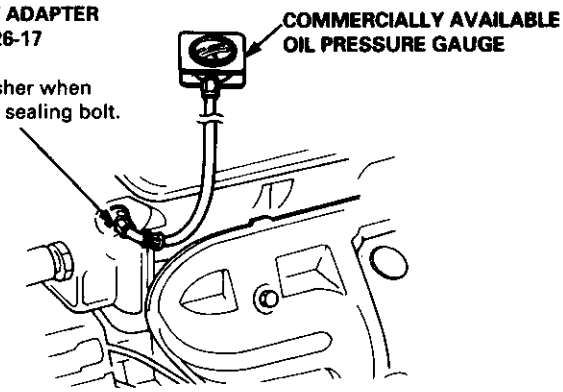

Connect a tachometer (see section 11).

Start the engine and warm it up to normal operating temperature.

Check oil pressure at engine speeds of 1,000, 3,000 and 5,000 rpm.

NOTE:
Keep measuring time as short as possible because engine is running with no load (less than one minute).

Is pressure below 50 kPa (0.5 kgf/cm², 7 psi)?

NO → **Inspect the VTEC solenoid valve.**

YES

Turn off the engine.
Check for continuity between the 2 terminals on the VTEC pressure switch.

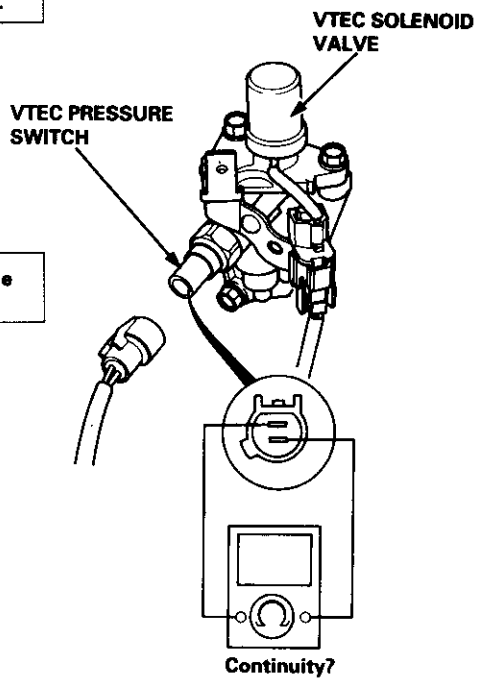

Is there continuity?

NO → **Replace the VTEC pressure switch.**

YES

(To page 6-40)

(cont'd)

Troubleshooting Flowchart — VTEC Pressure Switch (cont'd)

(From page 6-39)

Disconnect the 1P connector from the VTEC solenoid valve.

Attach the battery positive terminal to the GRN/WHT terminal.

Start the engine and check oil pressure at 5,000 rpm (for VTEC oil pressure test).

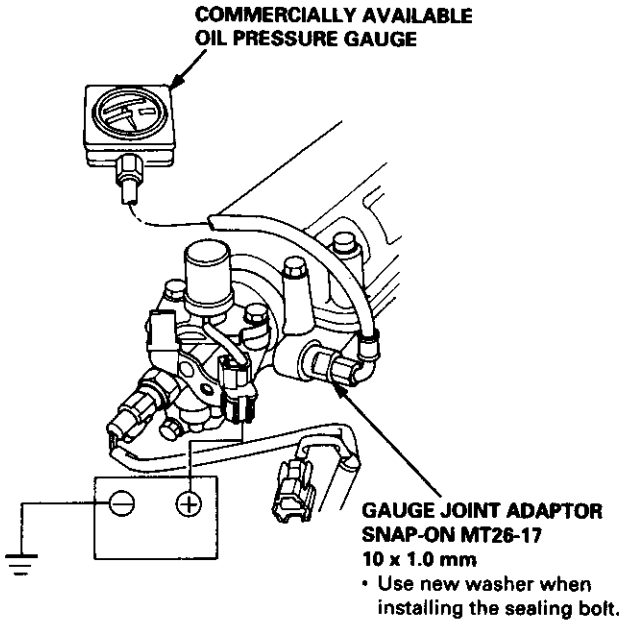

NOTE:
Keep measuring time as short as possible because engine is running with no load (less than one minute).

Is pressure above 400 kPa (4kgf/cm², 60 psi)?

NO → **Inspect the VTEC solenoid valve.**

YES

Check for continuity between the 2 terminals on the VTEC pressure switch under above condition.

Is there continuity?

YES → **Replace the VTEC pressure switch.**

NO

Substitute a known-good ECM and recheck. If symptom/indication goes away replace the original ECM.

VTEC Solenoid Valve Inspection

1. Disconnect the 1P connector from the VTEC solenoid valve.

2. Measure resistance between the terminal and body ground.

   Resistance: 14 – 30 Ω

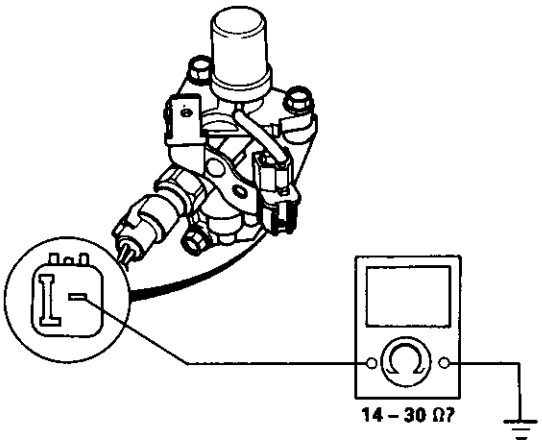

3. If the resistance is within specifications, remove the VTEC solenoid valve from the cylinder head, and check the VTEC solenoid valve filter for clogging.

   - If there is clogging, replace the engine oil filter and the engine oil.

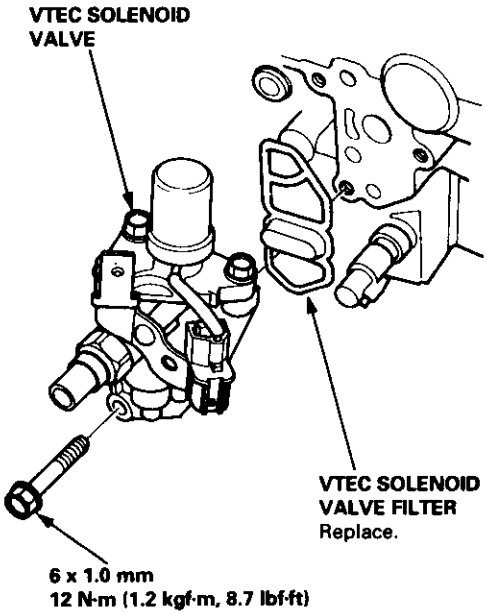

4. If the filter is not clogged, push the VTEC solenoid valve with your finger and check its movement.

   - If VTEC solenoid valve is normal, check the engine oil pressure.

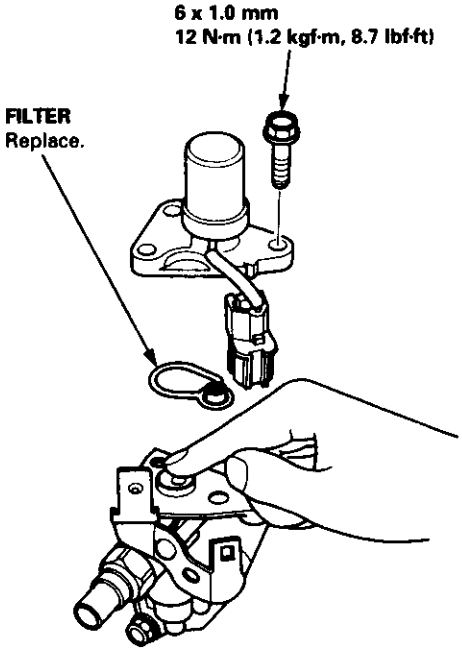

Rocker Arms — Manual Inspection

1. Set the No. 1 piston at TDC.
2. Remove the ignition wire cover and the wires.
3. Remove the ignition clamps while pulling up on the lock.

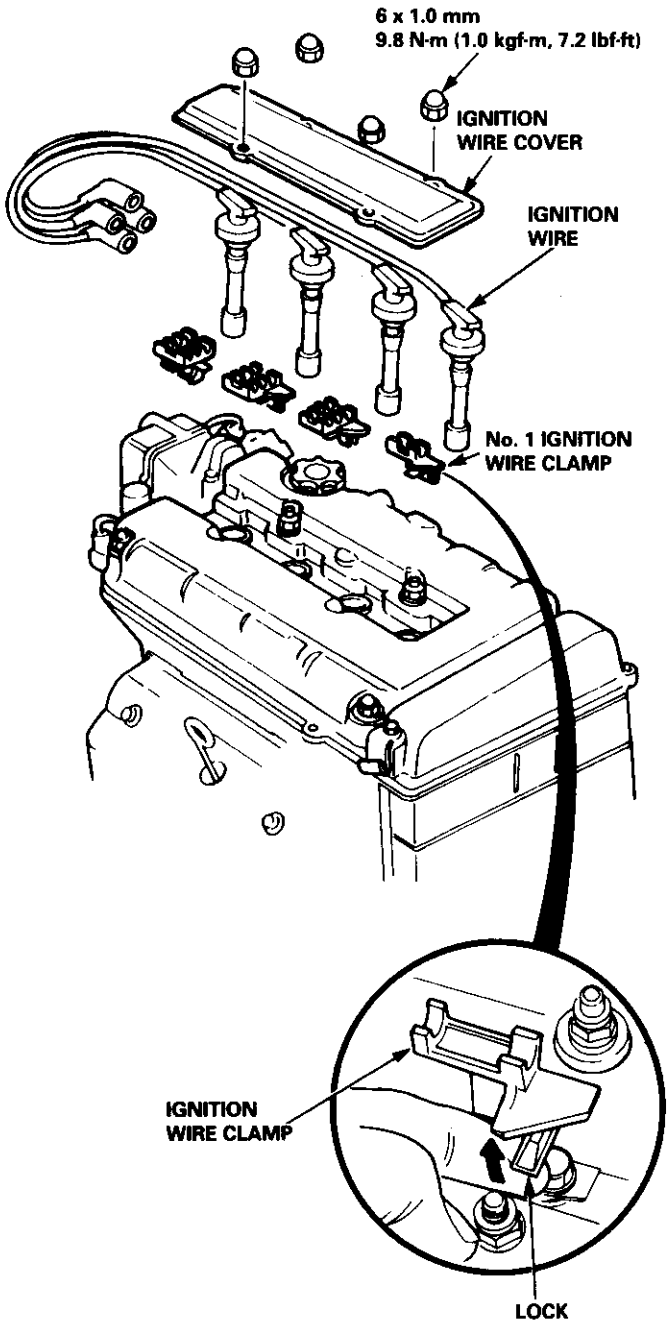

4. Remove the cylinder head cover.
5. Push the mid rocker arm on the No. 1 cylinder manually.
6. Check that the mid rocker arm moves independently of the primary and secondary rocker arms.

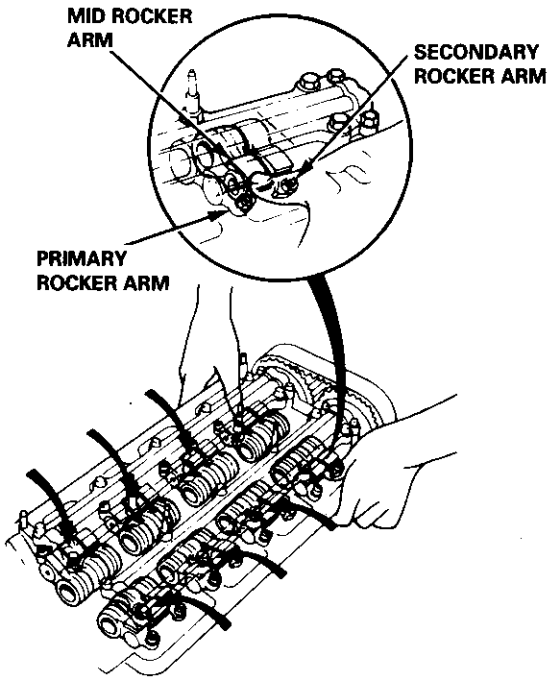

7. Check the mid rocker arm of each cylinder at TDC.
   - If the mid rocker arm does not move, remove the mid, primary and secondary rocker arms as an assembly and check that the pistons in the mid and primary rocker arms move smoothly.
   - If any rocker arm needs replacing, replace the primary, mid, and secondary rocker arms as an assembly.

NOTE: Refer to page 6-78 when installing cylinder head cover.

Rocker Arms — Inspection Using Special Tools

CAUTION:

- **Before using the valve inspection tool, make sure that the air pressure gauge on the air compressor indicates over 250 kPa (2.5 kgf/cm², 36 psi)**
- **Inspect the valve clearance before rocker arm inspection.**
- **Cover the timing belt with a shop towel to prevent getting oil on the belt.**
- **Check the mid rocker arm of each cylinder at TDC.**

1. Remove the cylinder head cover.

2. Plug the relief hole with the special tool (Air Stopper).

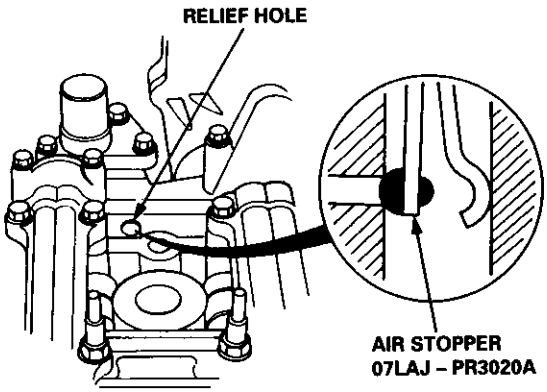

3. Remove the bolt and washer from the inspection hole and connect the valve inspection tool.

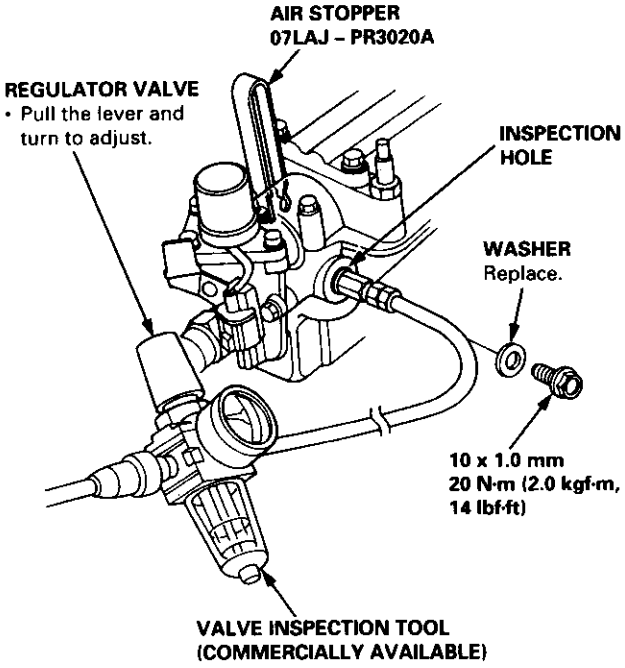

4. Apply specified air pressure to the rocker arm pistons after loosening the regulator valve on the valve inspection tool.

   Specified Air Pressure:
   250 kPa (2.5 kgf/cm², 36 psi)
   — 500 kPa (5.0 kgf/cm², 71 psi)

5. Make sure that the primary and secondary rocker arms are mechanically connected by the pistons and that the mid rocker arms do not move when pushed manually.

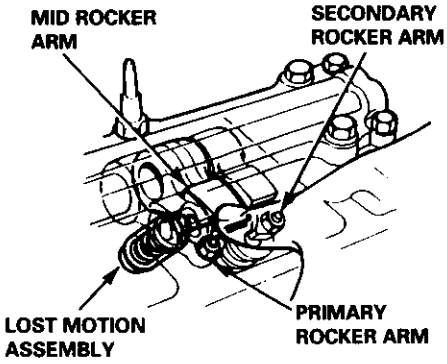

   - If any mid rocker arm moves independently of the primary and secondary rocker arms, replace the rocker arms as a set.

6. Remove the tools.

7. Check the operation of the lost motion assembly by pushing on the mid rocker arm. The lost motion assembly should compress fully and operate smoothly through its full stroke. Replace the assembly if it does not work smoothly.

8. After inspection, check that the Malfunction Indicator Lamp (MIL) does not come on.

NOTE: Refer to page 6-78 when installing cylinder head cover.

Valve Clearance

Adjustment

NOTE:
- Valves should be adjusted cold; at a cylinder head temperature of less than 100°F (38°C).
- Adjustment is the same for intake and exhaust valves.
- After adjusting, retorque the crankshaft pulley bolt to 177 N·m (18.0 kgf·m, 130 lbf·ft).

1. Remove cylinder head cover.

ADJUSTING BOLT LOCATIONS:

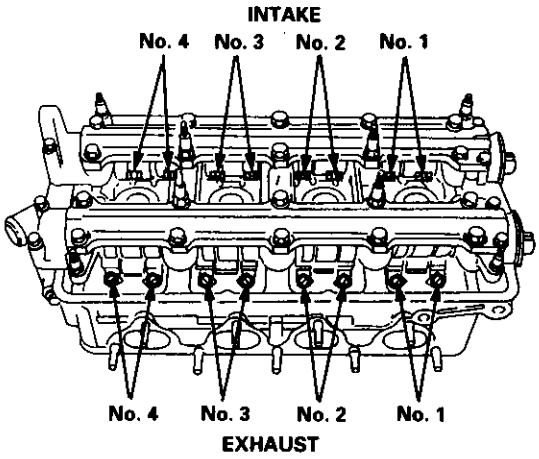

2. Set No. 1 piston at TDC. "UP" mark on the pulley should be at top, and TDC grooves on the pulley should align with the pointer on back cover. TDC grooves (white paint) on the crankshaft pulley should align with pointer on the timing belt lower cover.

Number 1 piston at TDC:

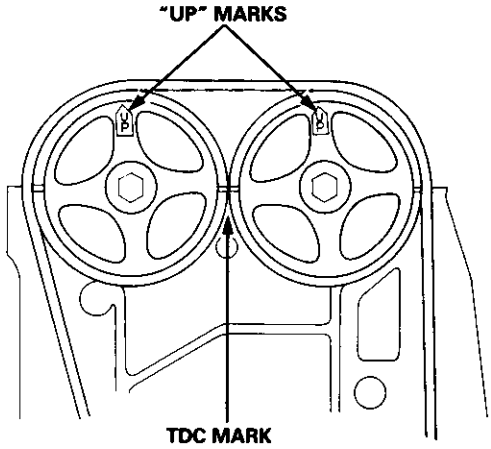

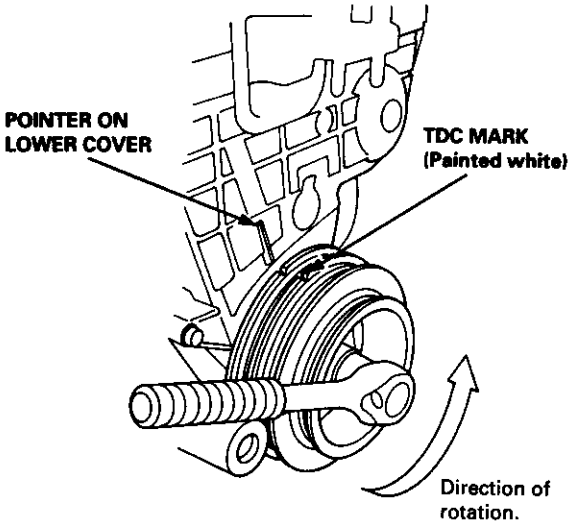

3. Adjust valve clearance on No. 1 cylinder.

   Intake: 0.15 – 0.19 mm (0.006 – 0.007 in)
   Exhaust: 0.17 – 0.21 mm (0.007 – 0.008 in)

4. Loosen the locknut and turn the adjusting screw until feeler gauge slides back and forth with a slight amount of drag.

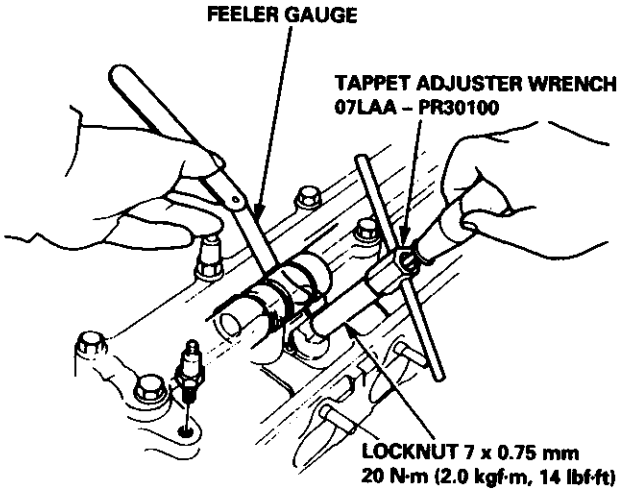

5. Tighten the locknut and recheck clearance again. Repeat adjustment if necessary.

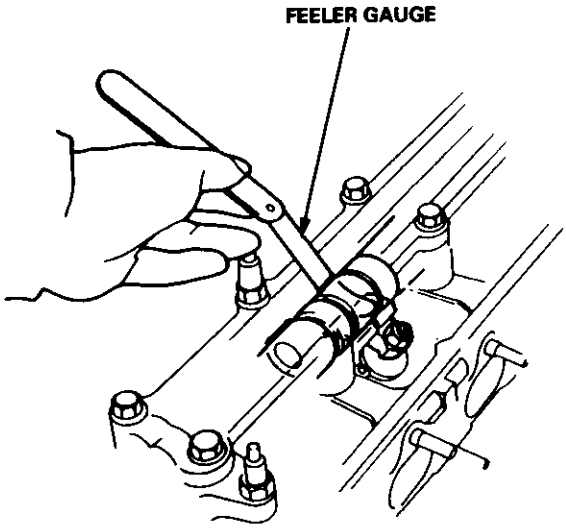

6. Rotate the crankshaft 180° counterclockwise (camshaft pulley turns 90°). The "UP" mark should be on the exhaust side. Adjust valves on No. 3 cylinder.

Number 3 piston at TDC:

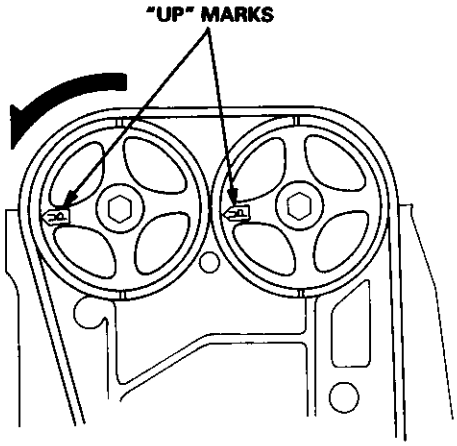

7. Rotate crankshaft 180° counterclockwise to bring No. 4 piston to TDC. The "UP" mark should be pointing straight down. Adjust valves on No. 4 cylinder.

Number 4 piston at TDC:

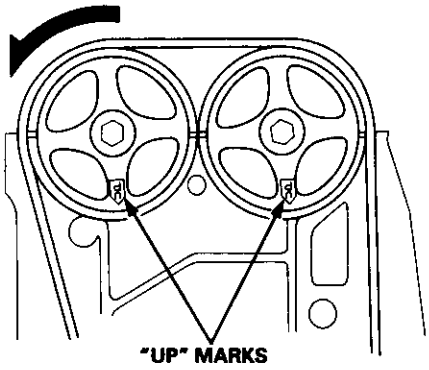

8. Rotate crankshaft 180° counterclockwise to bring No. 2 piston to TDC. The "UP" marks should be on the intake side. Adjust valves on No. 2 cylinder.

Number 2 piston at TDC:

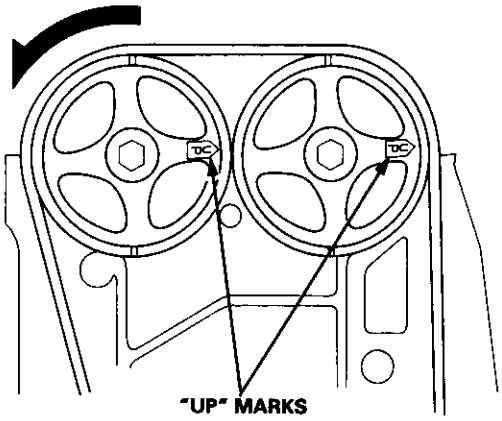

NOTE: Refer to page 6-78 when installing cylinder head cover.

Timing Belt

Illustrated Index

NOTE:
- Refer to page 6-51 for positioning crankshaft and pulley before installing belt.
- Mark the direction of rotation on the belt before removing.
- Replace the rubber seals for oil leakage between the cylinder head and cover.
- Do not use the middle cover and lower cover for storing items disassembled.
- Clean the middle cover and lower cover before installation.

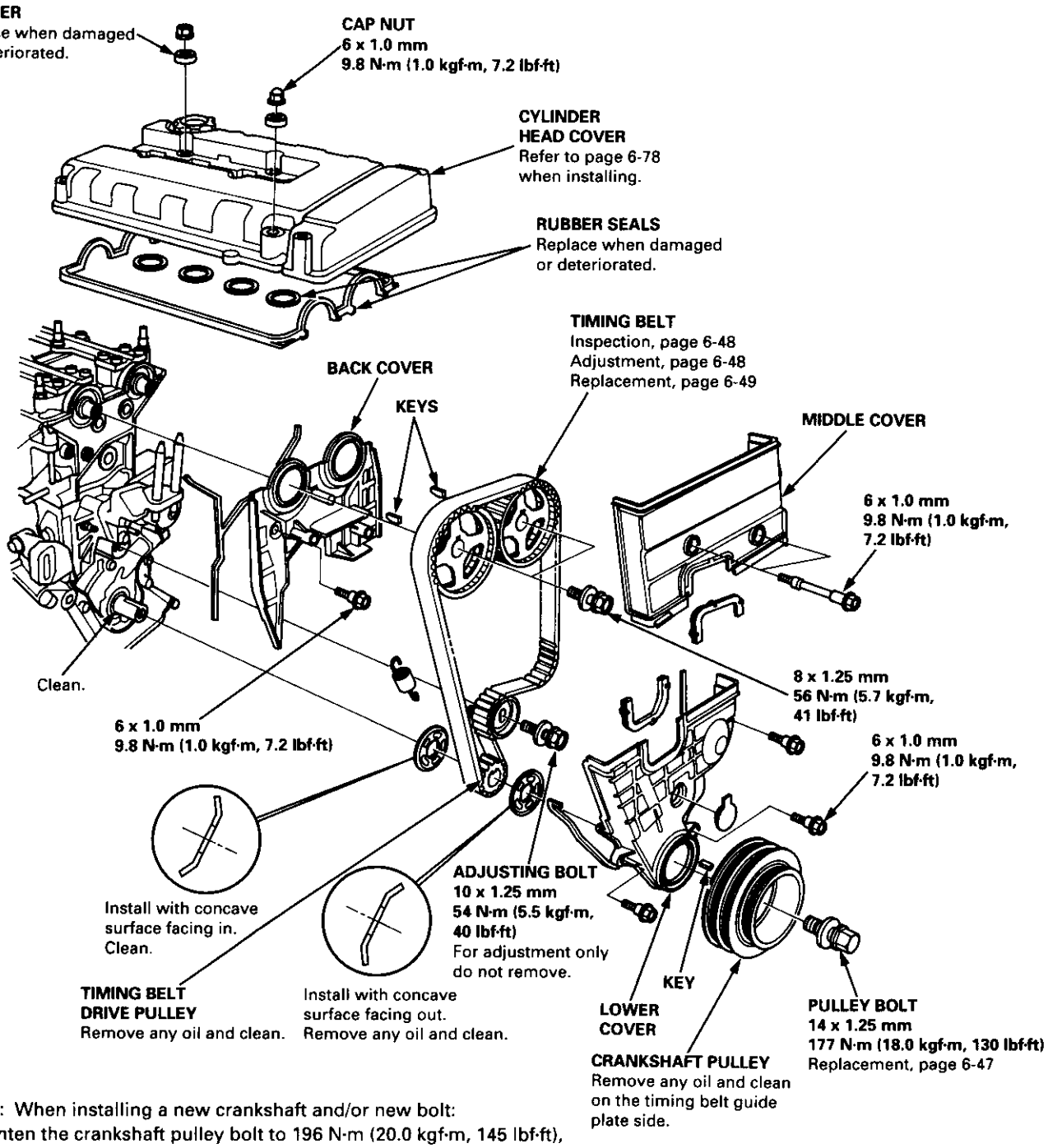

NOTE: When installing a new crankshaft and/or new bolt:
① tighten the crankshaft pulley bolt to 196 N·m (20.0 kgf·m, 145 lbf·ft),
② loosen bolt,
③ retighten it to 177 N·m (18.0 kgf·m, 130 lbf·ft).

Crankshaft Pulley Bolt

Replacement

NOTE:
- Crankshaft pulley bolt size and torque value: 14 x 1.25 mm
  177 N·m (18.0 kgf·m, 130 lbf·ft)
- When installing a new crankshaft and/or new pulley bolt:

  ① tighten the pulley bolt to 196 N·m (20.0 kgf·m, 145 lbf·ft).
  ② loosen the bolt,
  ③ retighten it to 177 N·m (18.0 kgf·m, 130 lbf·ft).

- When reinstalling the bolt, lubricate the threads and flange with engine oil, but don't lubricate the washer and pulley.

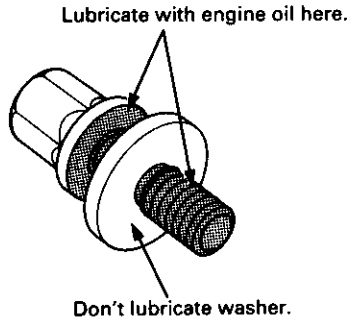

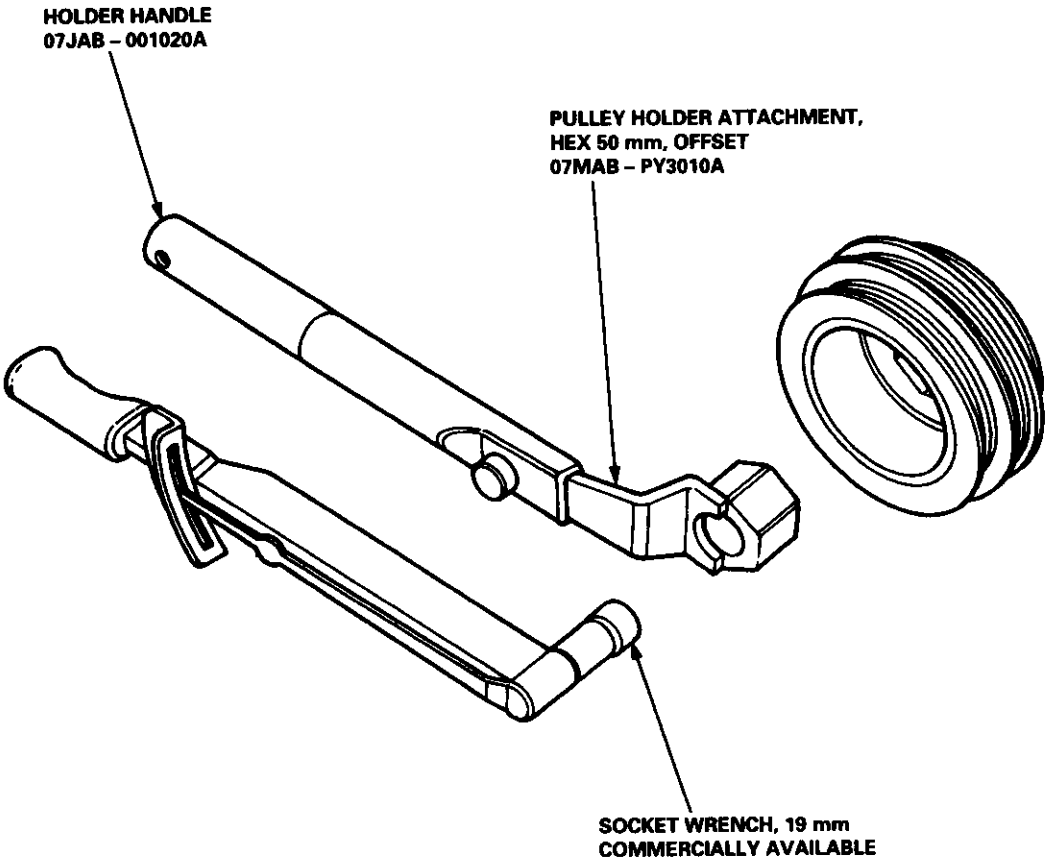

Timing Belt

Inspection

1. Remove the cylinder head cover.

   - Refer to page 6-78 when installing.

2. Inspect the timing belt for cracks and oil or coolant soaking.

   NOTE:
   - Replace the belt if oil or coolant soaked.
   - Remove any oil or solvent that gets on the belt.

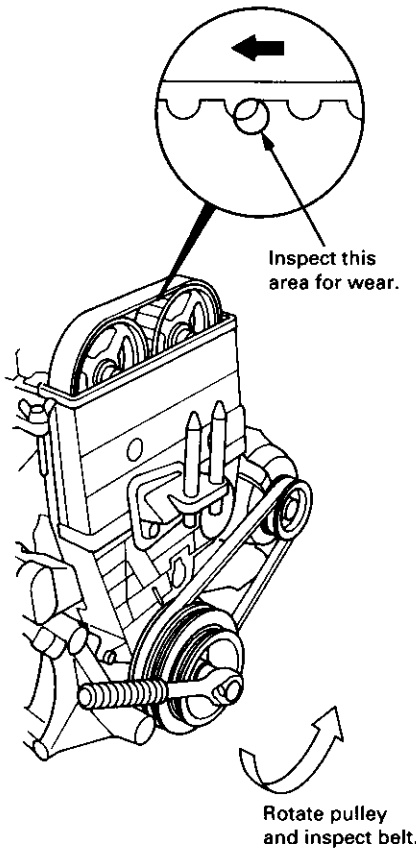

4. After inspecting, retorque the crankshaft pulley bolt to 177 N·m (18.0 kgf·m, 130 lbf·ft).

Tension Adjustment

CAUTION: Always adjust timing belt tension with the engine cold.

NOTE:
- The tensioner is spring-loaded to apply proper tension to the belt automatically after making the following adjustment.
- Always rotate the crankshaft counterclockwise when viewed from the pulley side. Rotating it clockwise may result in improper adjustment of the belt tension.

1. Remove the cylinder head cover. (Refer to page 6-78 when installing.)

2. Set the No. 1 piston at TDC (see page 6-51).

3. Rotate the crankshaft 5-6 revolutions to set the belt.

4. Set the No. 1 piston at TDC.

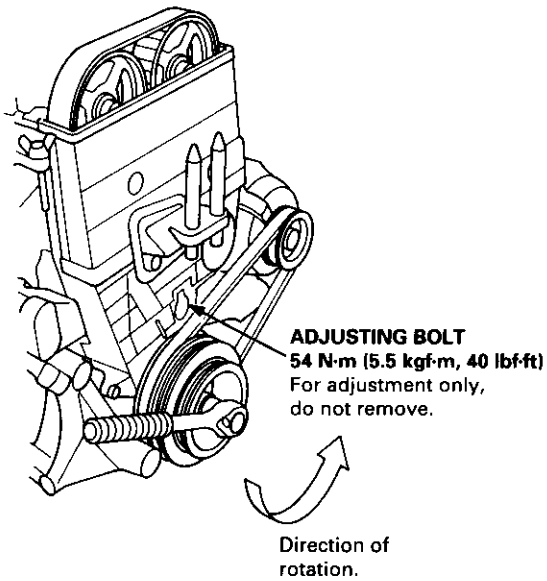

5. Loosen the adjusting bolt 1/2 turn (180°) only.

6. Rotate the crankshaft counterclockwise 3 teeth on the camshaft pulley.

7. Tighten the adjusting bolt.

8. After adjusting, retorque the crankshaft pulley bolt to 177 N·m (18.0 kgf·m, 130 lbf·ft).

Removal

NOTE:
- Turn the crankshaft pulley so the No. 1 piston is at top dead center (TDC) before removing the belt (see page 6-51).
- Inspect the water pump when removed the timing belt (see page 10-9).

1. Remove the wheel well splash shield (see page 6-57).

2. Loosen the adjusting bolt and mounting bolts, then remove the power steering (P/S) pump belt.

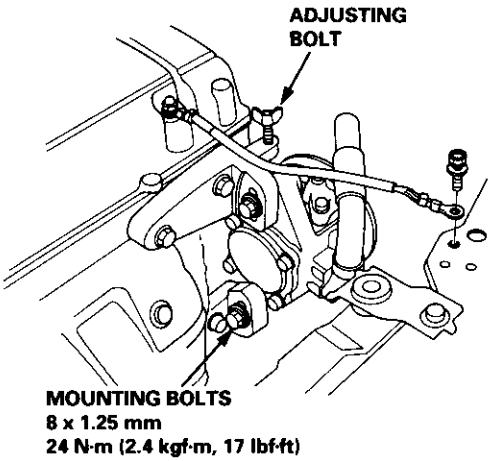

3. Loosen the adjusting bolt and idler pulley bracket bolt, then remove the air conditioning (A/C) compressor belt.

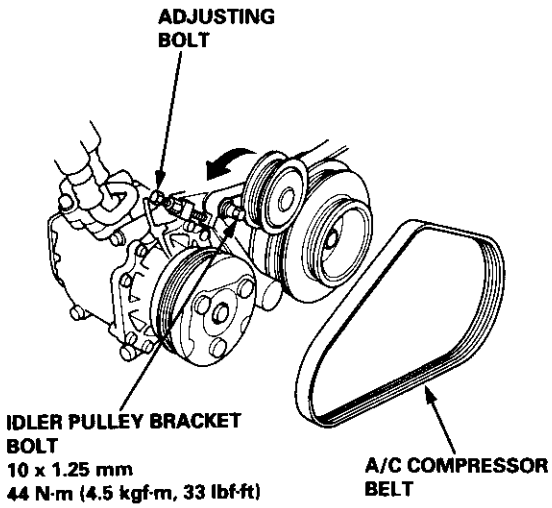

4. Loosen the adjusting nut and mounting nut, then remove the alternator belt.

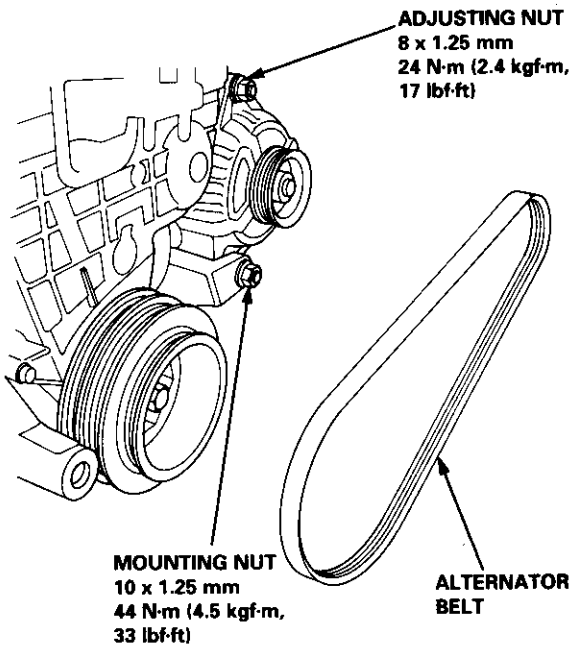

5. Remove the cruise control actuator (see page 6-58).

6. Remove the side engine mount.

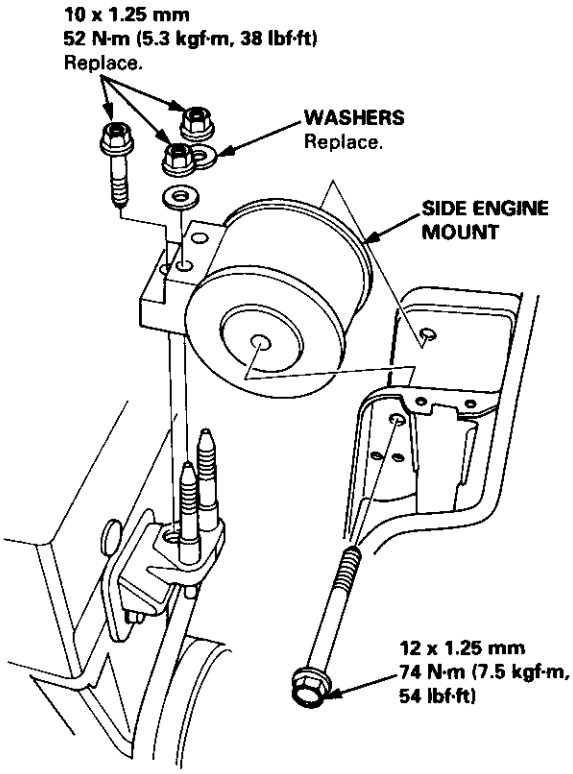

(cont'd)

Removal (cont'd)

7. Remove the cylinder head cover.
   - Refer to page 6-78 when installing.
8. Remove the pulley bolt and crankshaft pulley (see page 6-47).
9. Remove the middle cover and the lower cover.
   NOTE:
   - Do not use the middle cover and lower cover for storing items disassembled.
   - Clean the middle cover and lower cover before installation.
10. Loosen the adjusting bolt 180°.
11. Push the tensioner to remove tension from the timing belt, then retighten the bolt.
12. Remove the timing belt from the pulleys.

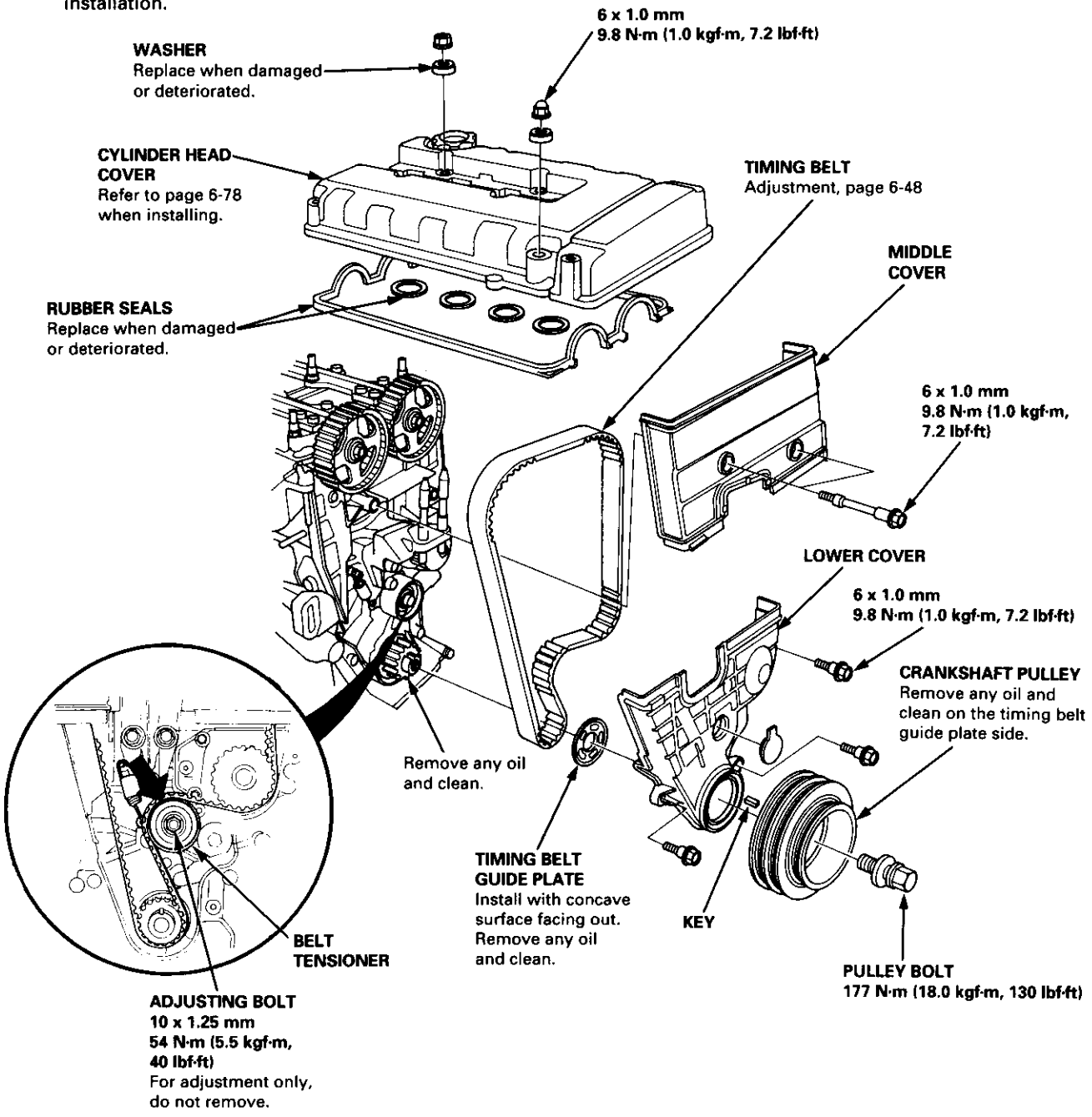

Installation

Install the timing belt in the reverse order of removal; Only key points are described there.

NOTE: Clean the middle cover and lower cover before installation.

1. Position the crankshaft and the camshaft pulleys as shown before installing the timing belt.

   A. Set the crankshaft so that the No. 1 piston is at top dead center (TDC). Align the groove on the teeth side of the timing belt drive pulley to the ∇ pointer on the oil pump.

   B. Align the TDC marks on intake and exhaust pulleys.

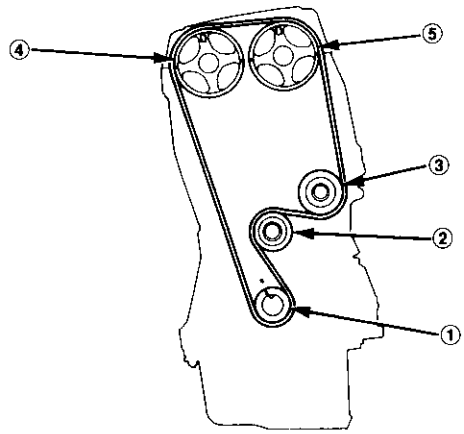

2. Install the timing belt tightly in the sequence shown.
   ① Timing belt drive pulley (crankshaft) → ② Adjusting pulley → ③ Water pump pulley → ④ Exhaust camshaft pulley → ⑤ Intake camshaft pulley.

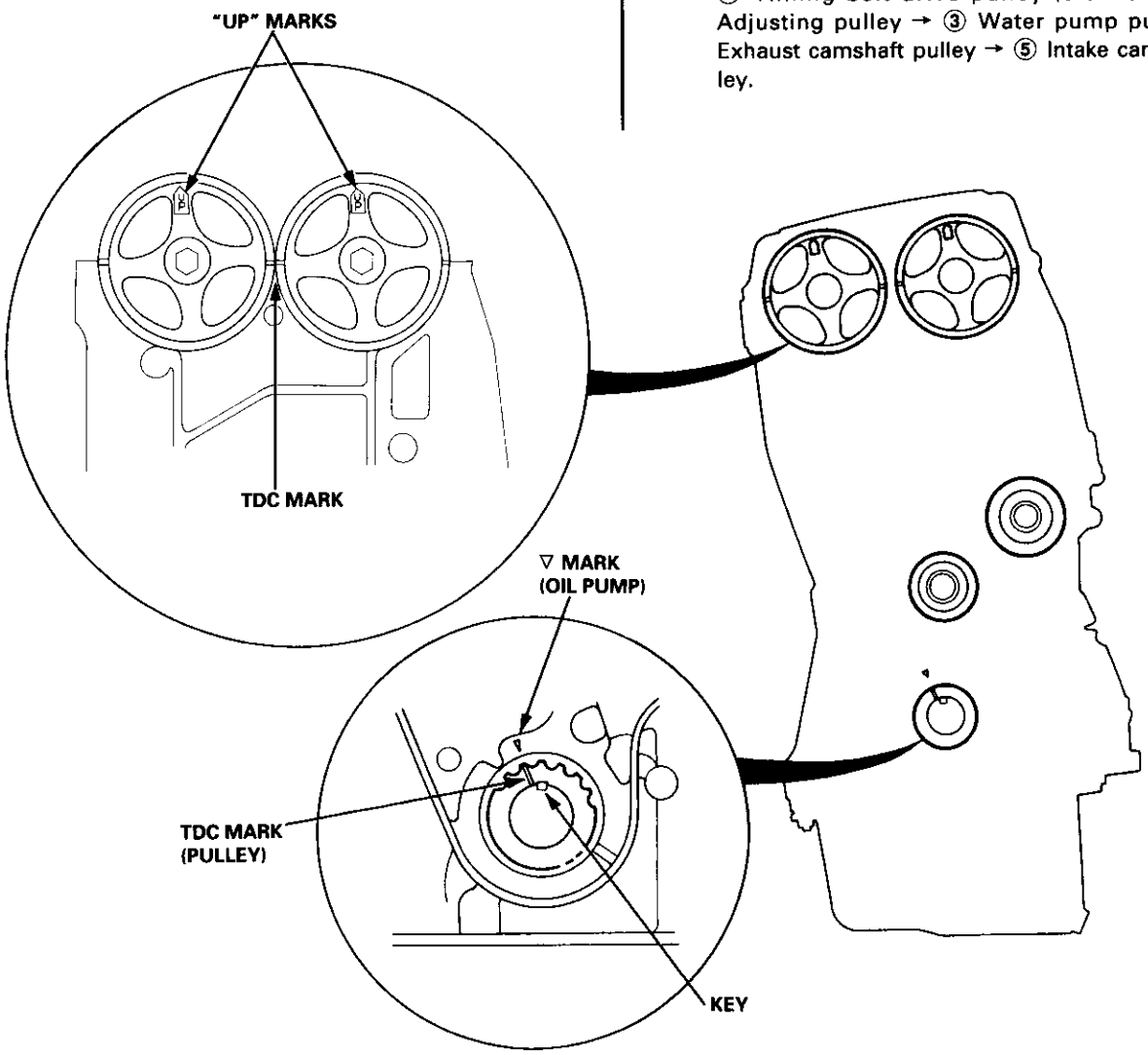

(cont'd)

Installation (cont'd)

3. Loosen and retighten the adjusting bolt to tension the belt.

4. Rotate the crankshaft about 4 or 6 turns counter-clockwise so that the belt positions on the pulleys.

5. Adjust the timing belt tension (see page 6-48).

6. Check the crankshaft pulley and the camshaft pulleys at TDC.

CRANKSHAFT PULLEY:

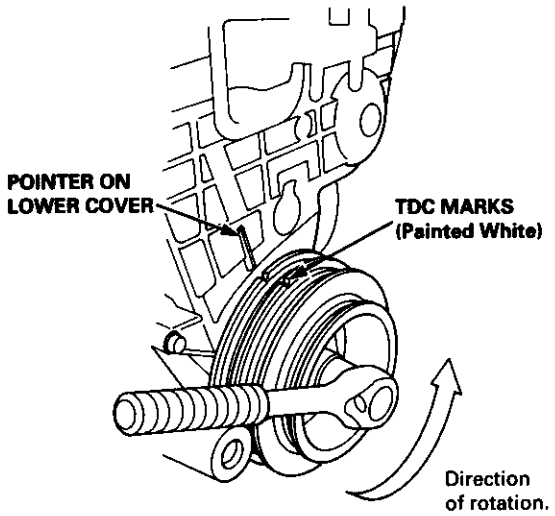

CAMSHAFT PULLEY:

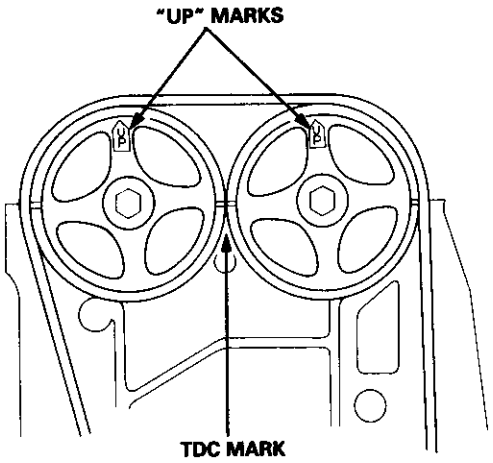

7. If a camshaft pulley is not positioned at TDC, remove the timing belt and adjust the positioning following the procedure on page 6-51, then reinstall the timing belt.

   NOTE: Refer to page 6-49 for timing belt removal.

   After installation, adjust the tension of each belt.
   - See section 23 for alternator belt tension adjustment.
   - See section 22 for A/C compressor belt tension adjustment.
   - See section 17 for P/S pump belt tension adjustment.

Cylinder Head

Illustrated Index

CAUTION: To avoid damaging the cylinder head, wait until the engine coolant temperature drops below 100°F (38°C) before removing it.

NOTE:
- Use new O-rings and gaskets when reassembling.
- Use liquid gasket, Part No. 08718 - 0001.
- Replace the rubber seals for oil leakage between the cylinder head and cover.

Prior to reassembling, clean all the parts in solvent, dry them, and apply lubricant to any contact parts.

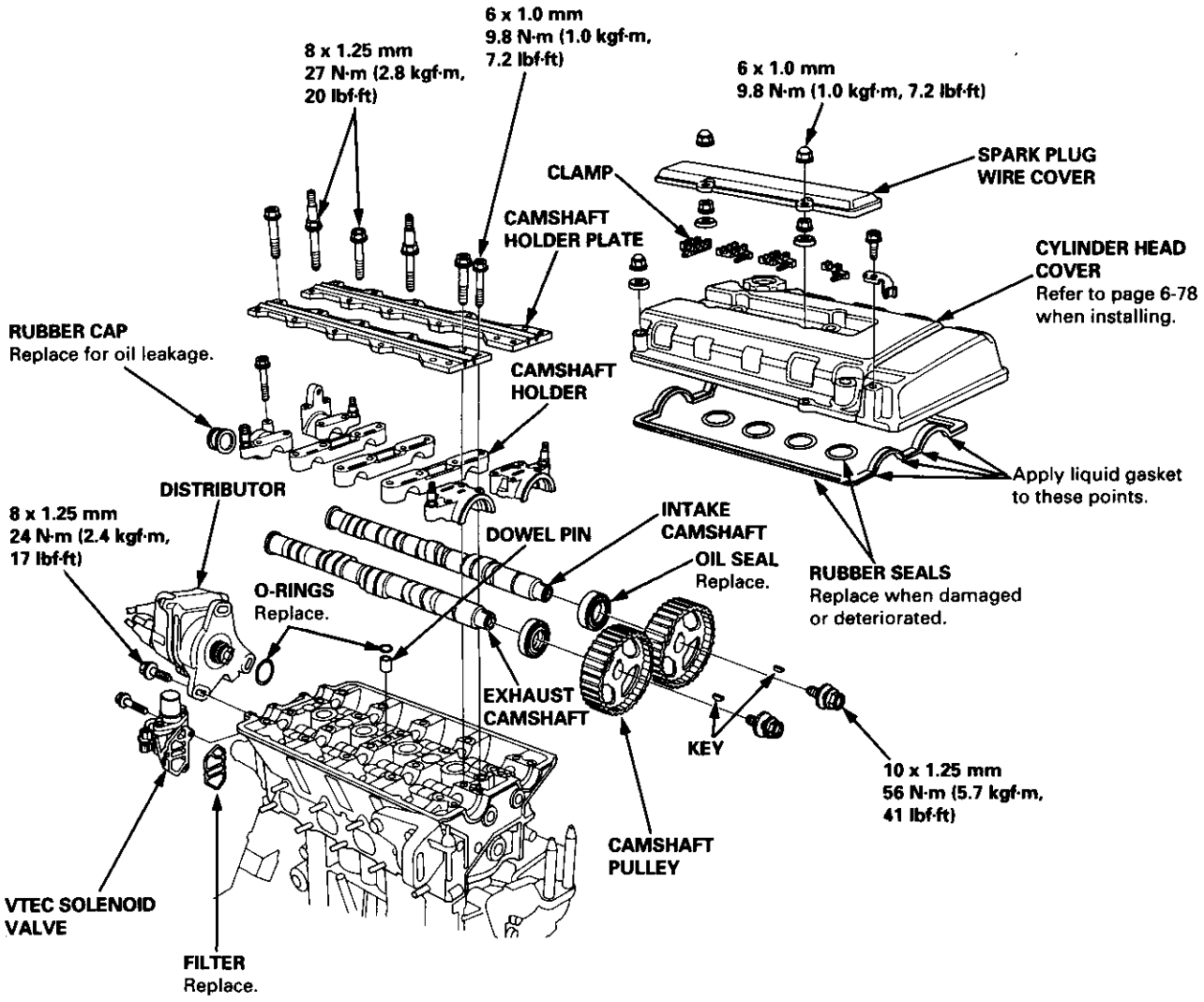

NOTE: Clean the head oil control orifice and the rocker shaft orifices when installing.

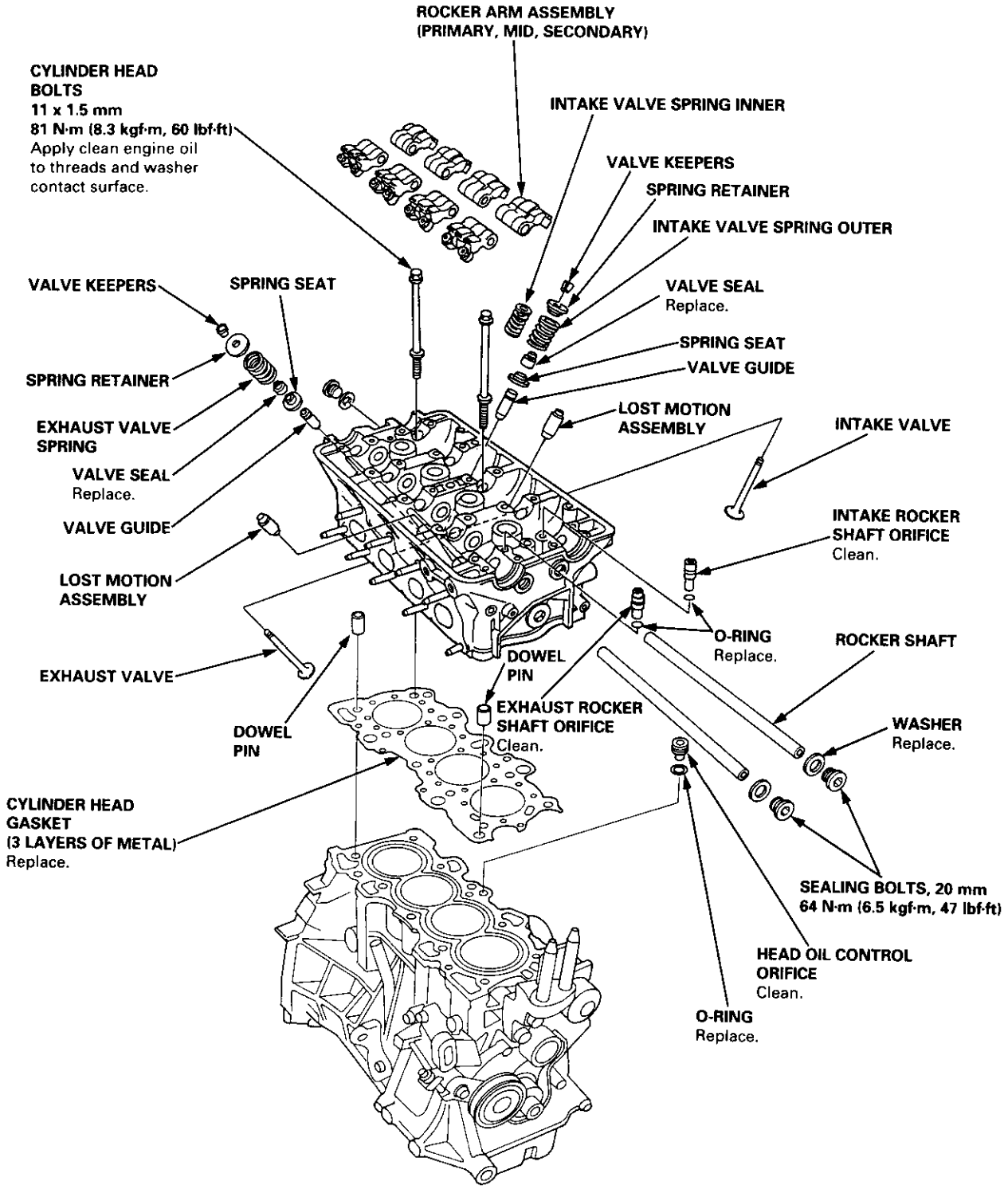

Cylinder Head

Removal

Engine removal is not required or this procedure.

CAUTION: To avoid damaging the cylinder head, wait until the engine coolant temperature drops below 100°F (38°C) before loosening the retaining bolts.

NOTE:
- Inspect the timing belt before removing the cylinder head.
- Turn the crankshaft pulley so that the No. 1 piston is at top dead center (TDC) (page 6-51).
- Mark all emissions hoses before disconnecting them.
- Anti-theft radios have a coded theft protection circuit. Be sure to get the customer's code number before
  — Disconnecting the battery.
  — Removing the No. 32 (7.5 A) fuse from the underhood fuse/relay box.
  — Removing the radio.
  After service, reconnect power to the radio and turn it on.
  When the word "CODE" is displayed, enter the customer's 5-digit code to restore radio operation.

1. Disconnect the negative terminal from the battery.

2. Drain the engine coolant (see page 10-5).

   - Remove the radiator cap to speed draining.

3. Relieve fuel pressure (see section 11).

   WARNING Do not smoke while working on fuel system, keep open flame or spark away from work area. Drain fuel only into an approved container.

4. Disconnect the fuel feed hose.

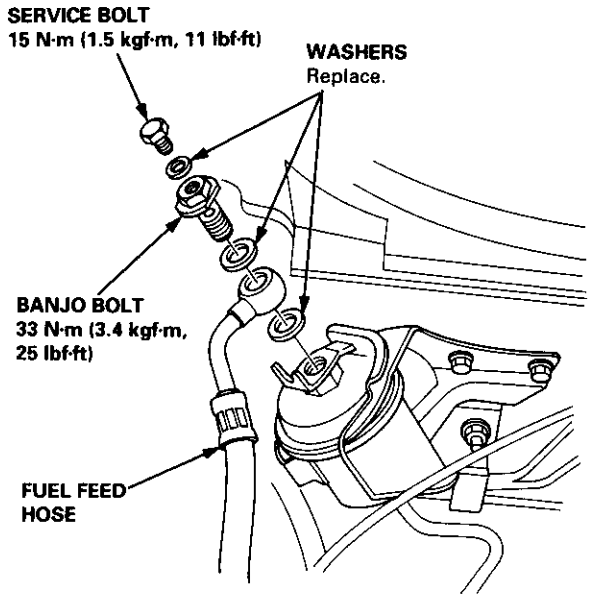

5. Remove the strut brace.

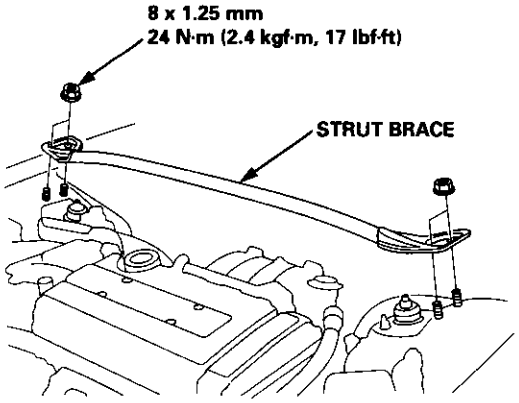

6. Remove the intake air duct.

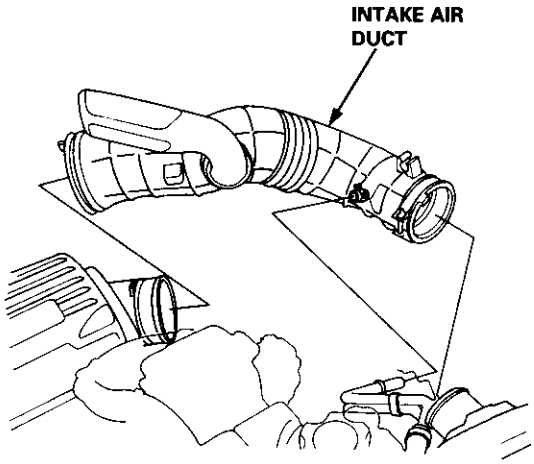

(cont'd)

Removal (cont'd)

7. Remove the vacuum hose and evaporative emission (EVAP) control canister hose.

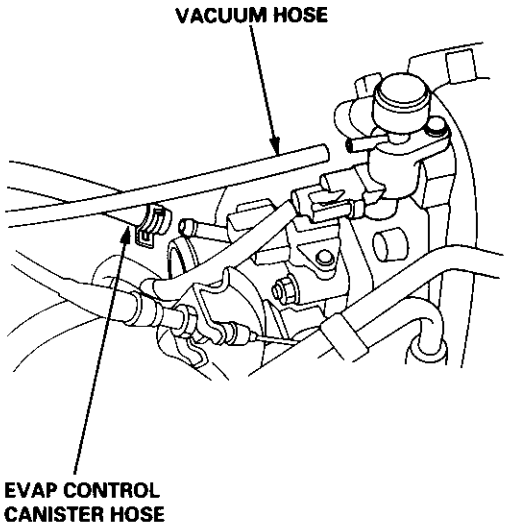

8. Remove the water bypass hose and positive crankcase ventilation (PCV) hose.

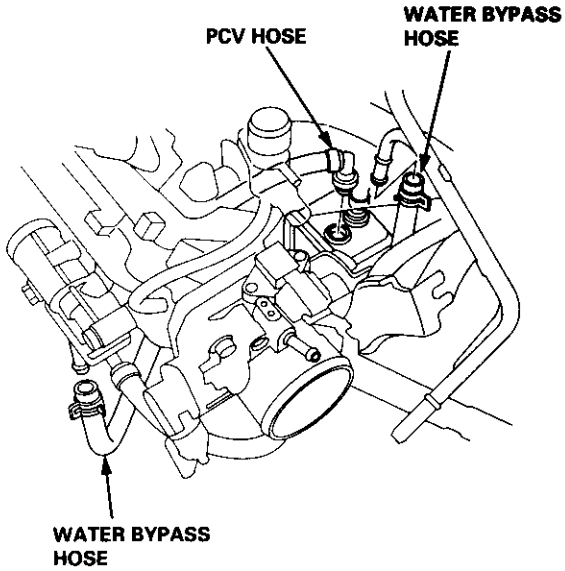

9. Remove the brake booster vacuum hose and fuel return hose.

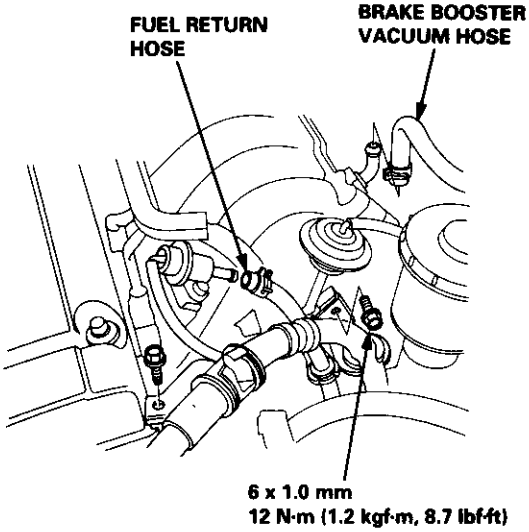

10. Remove the throttle cable.

NOTE:
- Take care not to bend the cable when removing it. Always replace any kinked cable with a new one.
- Adjust the throttle cable when installing (see section 11).

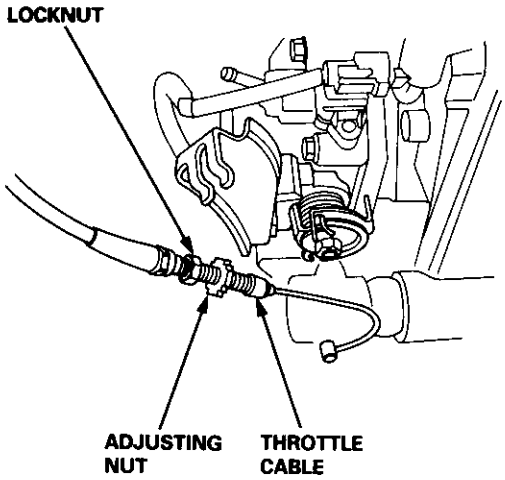

11. Remove the engine wire harness connectors and wire harness clamps from the cylinder head and the intake manifold.

- Four fuel injector connectors
- Intake air temperature (IAT) sensor connector
- Engine coolant temperature (ECT) sensor connector
- TDC/CKP/CYP sensor connector
- Ignition coil connector
- ECT gauge sending unit connector
- Throttle position (TP) sensor connector
- VTEC solenoid valve connector
- VTEC pressure switch connector
- Manifold absolute pressure (MAP) sensor connector
- Idle air control (IAC) sensor connector
- EVAP purge control solenoid valve connector
- Intake air bypass (IAB) control solenoid valve connector

12. Remove the spark plug caps and distributor from the cylinder head.

13. Remove the upper radiator hose, heater hose and water bypass hose.

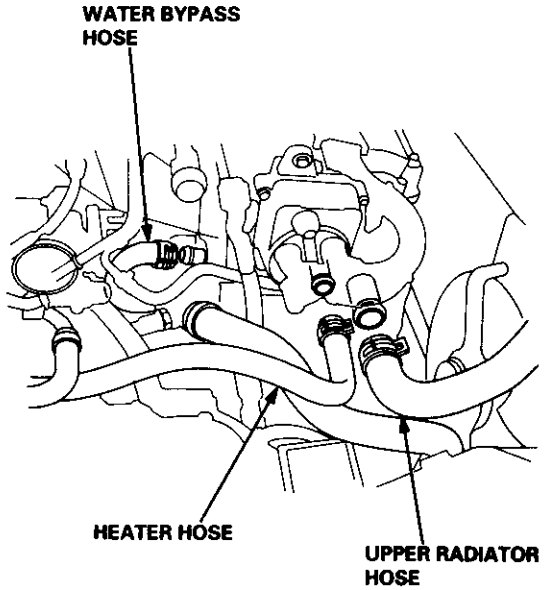

14. Remove the splash shield.

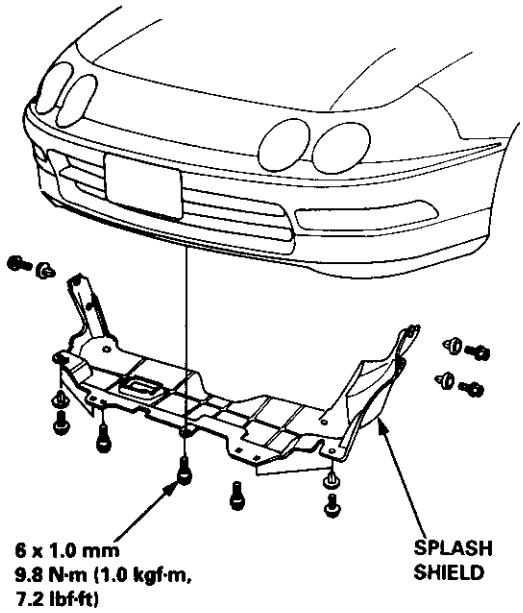

15. Remove the engine ground cable.
Remove the adjusting bolt and mounting bolts, then remove the power steering (P/S) pump belt and P/S pump.
- Do not disconnect the P/S hoses.

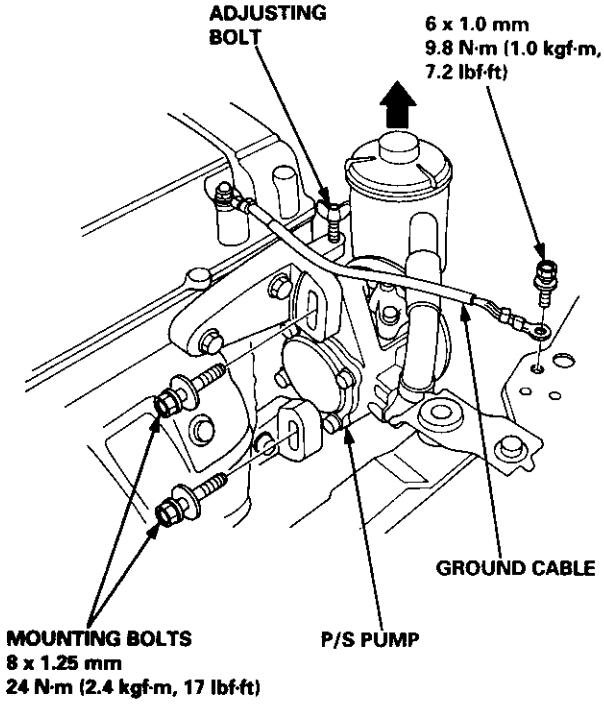

(cont'd)

Removal (cont'd)

16. Remove the heat shield from the P/S bracket (see page 5-18).

17. Remove the air conditioning (A/C) compressor belt (see page 6-49).

18. Remove the alternator belt (see page 6-49).

19. Remove the cruise control actuator.

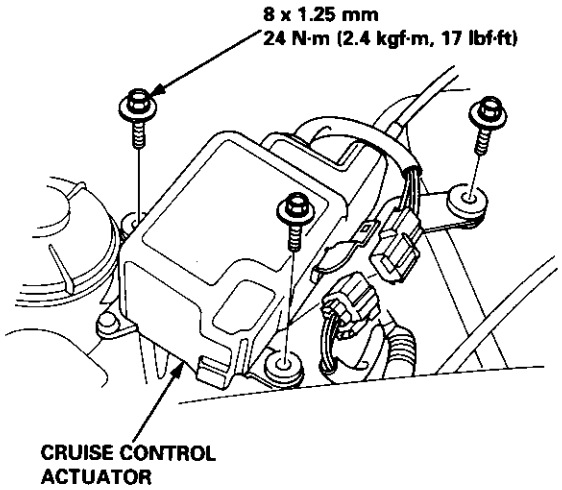

20. Remove the side engine mount.

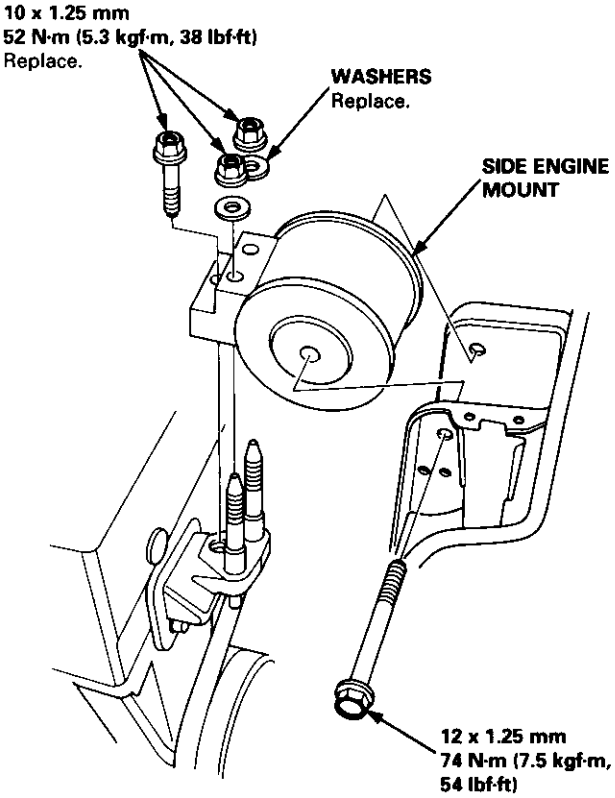

21. Remove the cylinder head cover.

22. Remove the timing belt (see page 6-49).

23. Remove the camshaft pulleys and back cover.

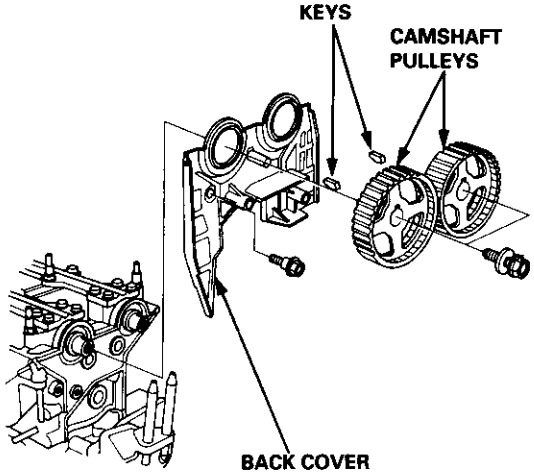

24. Remove the exhaust manifold.

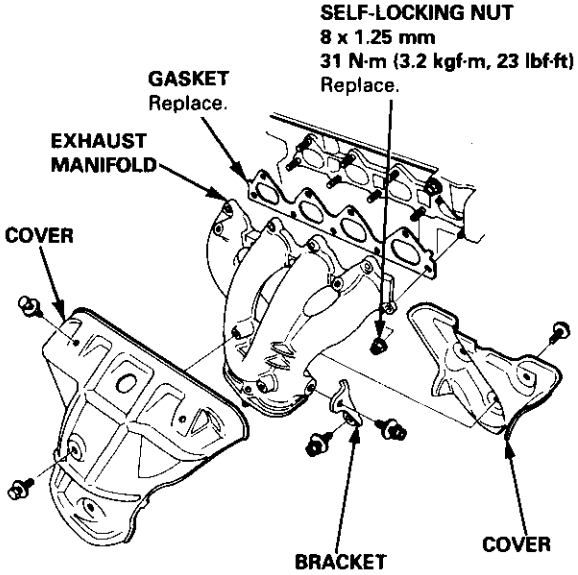

25. Remove the intake manifold.

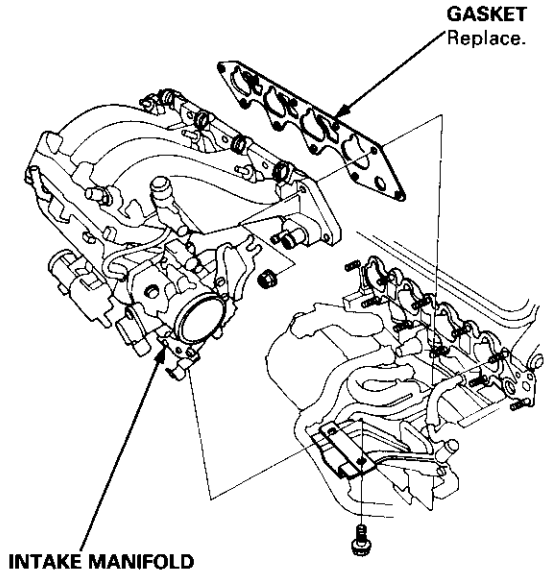

26. Loosen the adjusting screws.

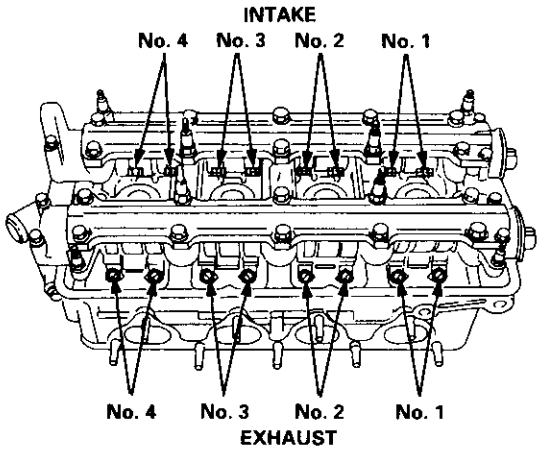

27. Remove the camshaft holder plates, camshaft holders, and camshafts.

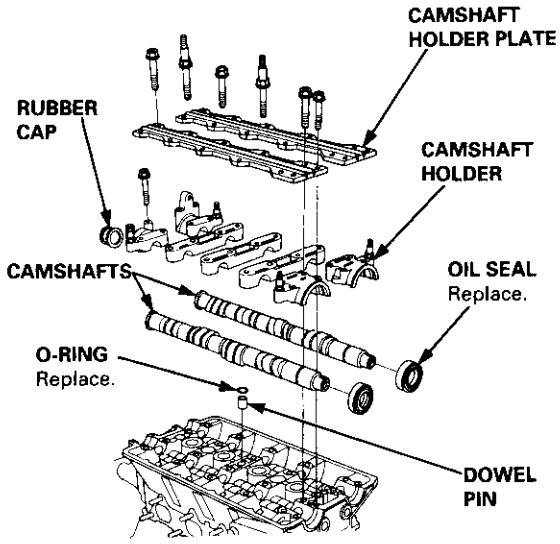

28. Remove the cylinder head bolts, then remove the cylinder head.

CAUTION: To prevent warpage, unscrew the bolts in sequence 1/3 turn at a time; repeat until all bolts are loosened.

CYLINDER HEAD BOLT LOOSENING SEQUENCE

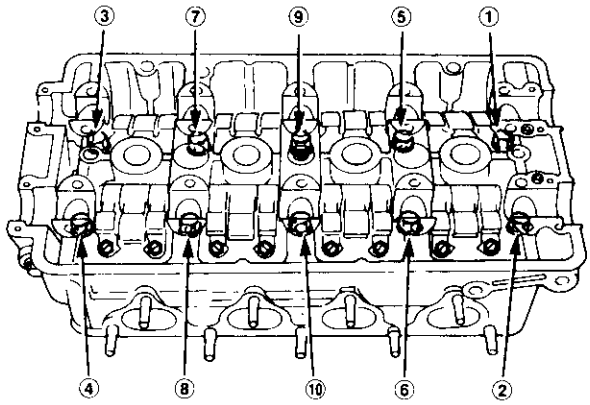

Rocker Arms

Removal

1. Hold the rocker arms together with a rubber band to prevent them from separating.

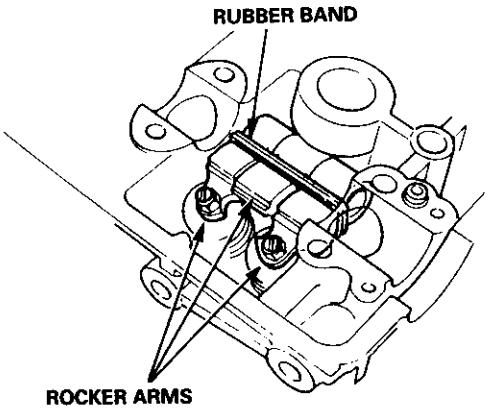

2. Remove the intake and exhaust rocker shaft orifices, then remove the VTEC solenoid valve and the sealing bolts.

   NOTE: The shapes of the rocker shaft orifices of the intake and exhaust are different. Identify the parts as they are removed to ensure reinstallation in the original locations.

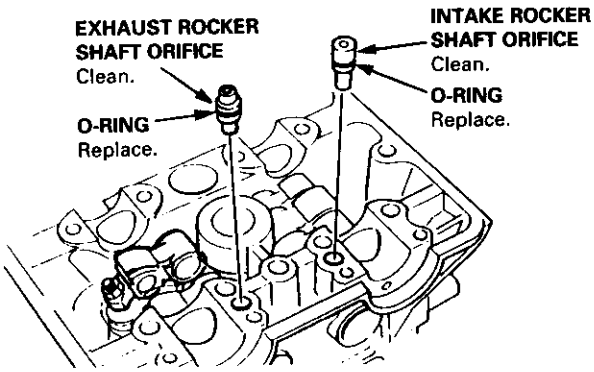

3. Screw 12 mm bolts into the rocker arm shafts. Remove each rocker arm set while slowly pulling out intake and exhaust rocker arm shafts.

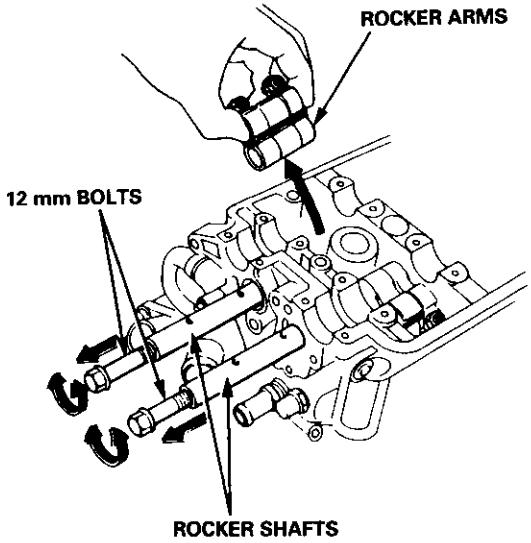

Locations

CAUTION: After installing the rocker shaft orifice, try to turn the rocker shaft to make sure that the orifice is correctly inserted in the hole of the rocker shaft. If the orifice is in place, it should not turn.

NOTE:
- Identify parts as they are removed to ensure reinstallation in original locations.
- Inspect rocker shafts and rocker arms (see pages 6-62 and 63).
- Rocker arms must be installed in the same position if reused.
- Clean the rocker shaft orifices when installing.

Prior to reinstalling, clean all the parts in solvent, dry them and apply lubricant to any contact surfaces.

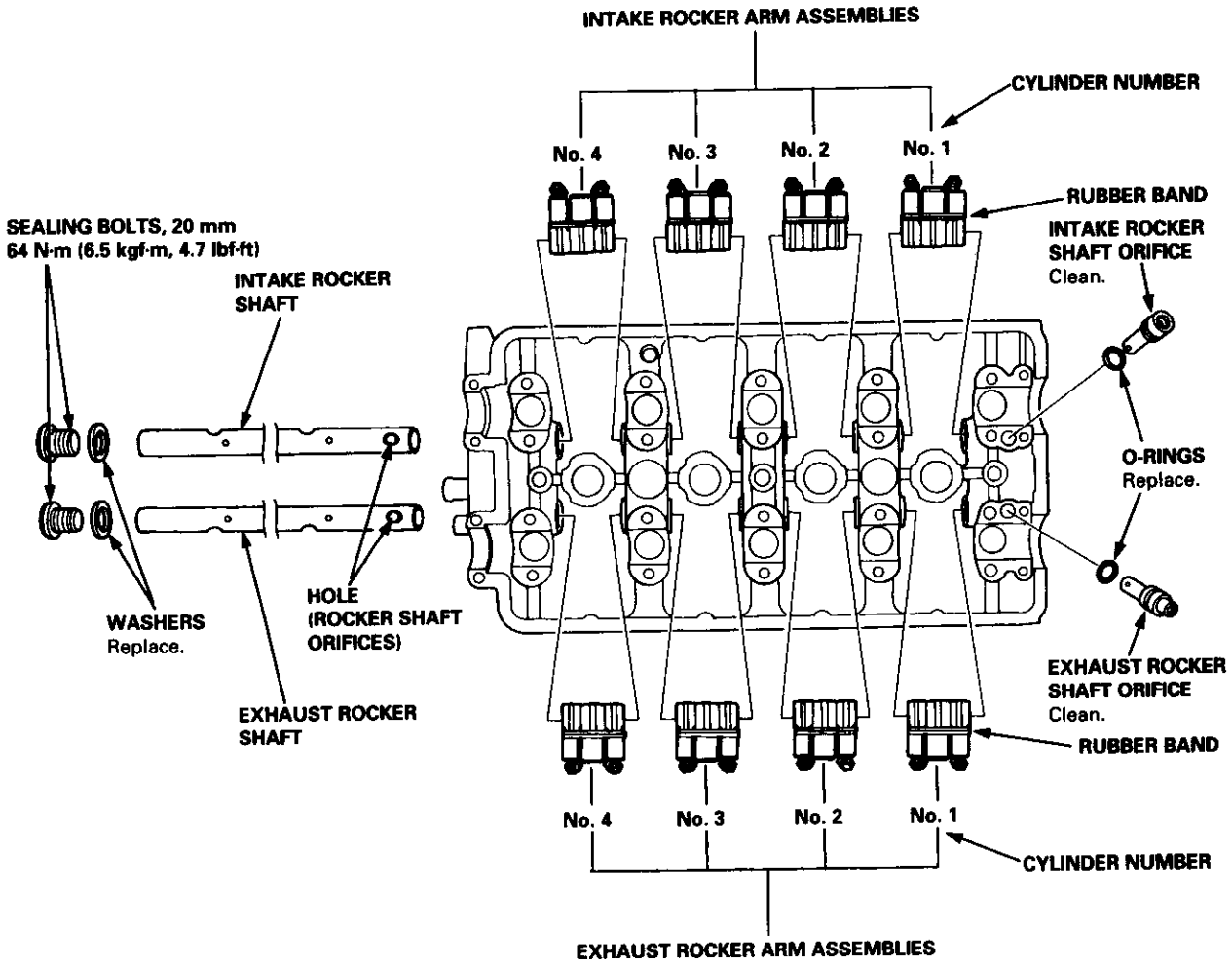

Inspection

NOTE: When reassembling the primary rocker arm, carefully apply air pressure to the oil passage of the rocker arm.

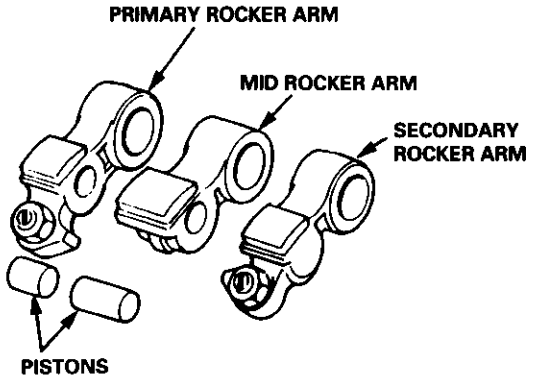

1. Inspect the rocker arm piston. Push it manually.
   — If it does not move smoothly, replace the rocker arm assembly.

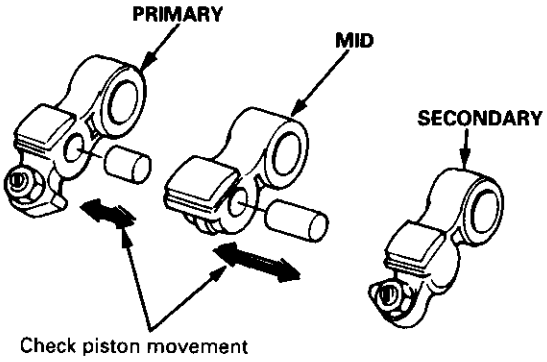

NOTE:
- Apply oil to the pistons when reassembling.
- Bundle the rocker arms with a rubber band to keep them together as a set.

2. Remove the lost motion assembly from the cylinder head and inspect it. Test it by pushing the plunger with your finger.
   — If the lost motion assembly does not move smoothly, replace it.

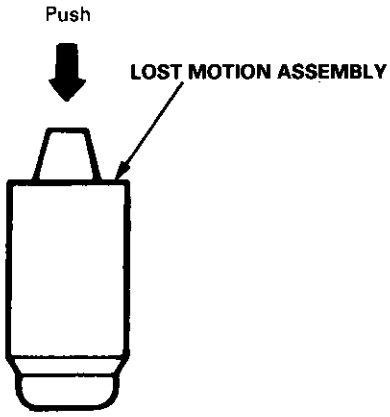

Arm-to-Shaft Clearance

Measure both the intake rocker shaft and exhaust rocker shaft.

1. Measure diameter of shaft at first rocker location.

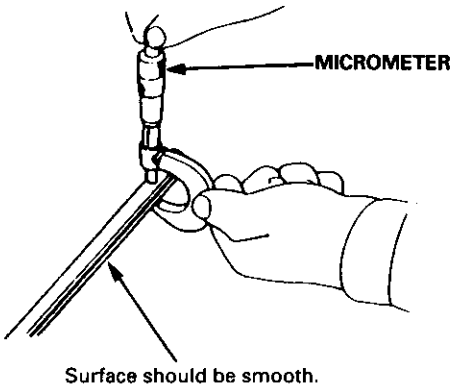

2. Zero gauge to shaft diameter.

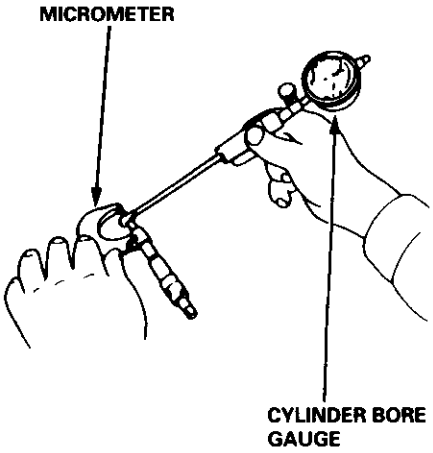

3. Measure inside diameter of rocker arm and check for out-of-round condition.

Rocker Arm-to-Shaft Clearance:
Intake and Exhaust
Standard (New): 0.025 – 0.052 mm (0.0010 – 0.0020 in)
Service Limit: 0.08 mm (0.003 in)

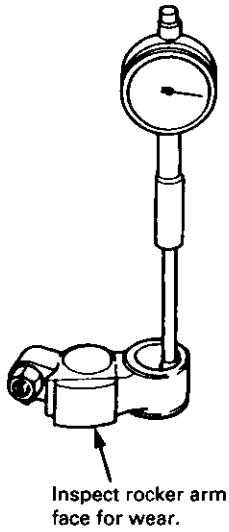

Repeat for all rockers.
— If over limit, replace rocker shaft and all over tolerance rocker arms.

NOTE: If any rocker arm needs replacement, replace all three rocker arms in that set (primary, mid, and secondary).

Installation

1. Install the rocker arms in the reverse order of removal:
   - Valve adjusting locknuts should be loosened and adjusting screw backed off before installation.
   - The component parts must be reinstalled in the original locations.

2. Install the lost motion assemblies.

3. Install the rocker arms while inserting the rocker arm shaft into the cylinder head.

   NOTE: Remove the rubber band after installing the rocker arms.

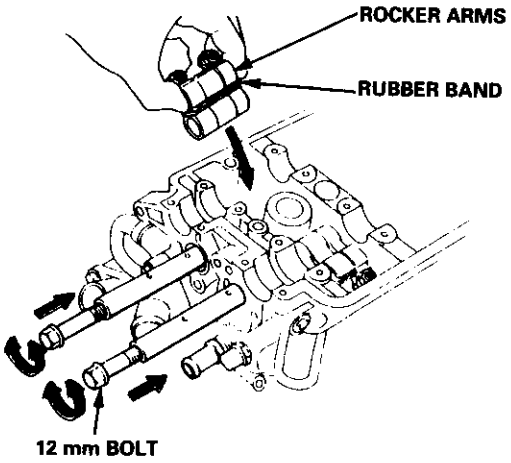

4. Clean and install the rocker shaft orifices with new O-rings. If the holes in the rocker arm shaft and cylinder head are not in line with each other, screw a 12 mm bolt into the rocker arm shaft and rotate the shaft.

   NOTE: The shapes of the rocker shaft orifices for the intake and exhaust are different. The orifices must be installed in the original locations.

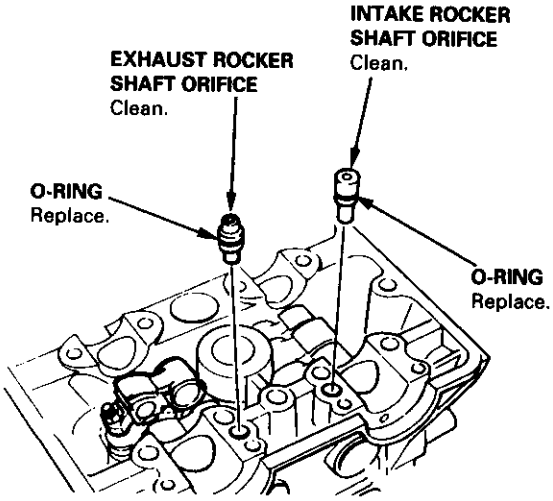

Inspection

NOTE:
- Do not rotate the camshaft during inspection.
- Remove the rocker arms and rocker shafts.

1. Put the camshafts and camshaft holders on the cylinder head, and then tighten the bolts to the specified torque.

   Specified Torque:
   ❶ – ❿: 8 mm bolts 26 N·m (2.7 kgf·m, 20 lbf·ft)
   ⓫ – ⓮: 6 mm bolts 9.8 N·m (1.0 kgf·m, 7.2 lbf·ft)

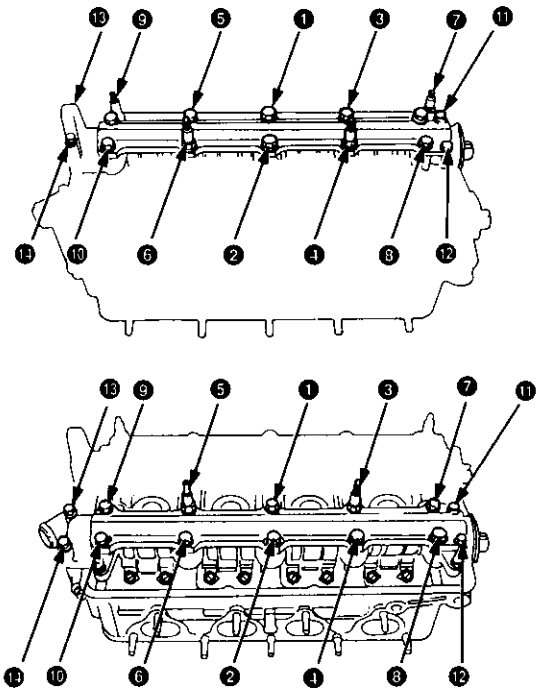

2. Seat each camshaft by pushing it toward distributor end of the cylinder head.

3. Zero the dial indicator against end of distributor drive, then push the camshaft back and forth and read the end play.

   Camshaft End Play:
   Standard (New): 0.05 – 0.15 mm (0.002 – 0.006 in)
   Service Limit: 0.5 mm (0.02 in)

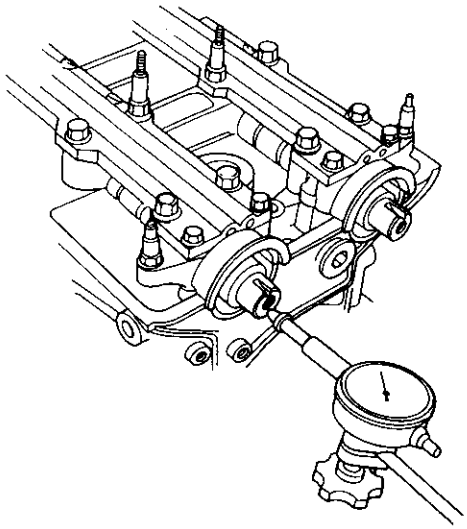

4. Remove the bolts, then remove the camshaft holders from the cylinder head.

   NOTE: Unscrew the camshaft holder bolts two turns at a time, in a crisscross pattern.

5. Lift camshaft out of cylinder head, wipe clean, then inspect lift ramps. Replace camshaft if lobes are pitted, scored, or excessively worn.

6. Clean the camshaft bearing surfaces in the cylinder head, then set camshaft back in place.

7. Place a plastigage strip across each journal.

8. Install the camshaft holders, and then tighten the bolts to the specified torque as shown in the left column on this page.

   NOTE: Do not rotate camshafts during inspection.

9. Remove the camshaft holders. Measure widest portion of plastigage strip on each journal.

   Camshaft-to-Holder Oil Clearance:
   Standard (New): 0.050 – 0.089 mm (0.002 – 0.004 in)
   Service Limit: 0.15 mm (0.006 in)

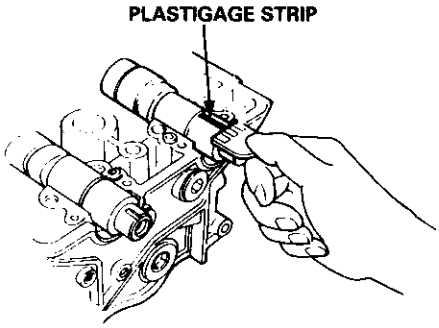

(cont'd)

Inspection (cont'd)

10. If camshaft-to-holder oil clearance is out of tolerance:

    — And camshaft has already been replaced, you must replace the cylinder head.

    — If camshaft has not been replaced, first check total runout with the camshaft supported on V-blocks.

    Camshaft Total Runout:
    Standard (New): 0.015 mm (0.0006 in)
    Service Limit: 0.03 mm (0.0012 in)

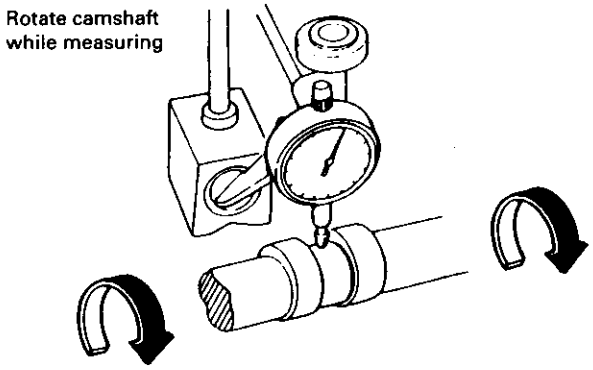

    — If the total runout of the camshaft is within tolerance, replace the cylinder head.
    — If the total runout is out of tolerance, replace the camshaft and recheck. If the oil clearance is still out of tolerance, replace the cylinder head.

11. Check cam lobe wear.

Cam Lobe Height Standard (New):

	INTAKE	EXHAUST
PRIMARY	33.411 mm (1.3154 in)	33.111 mm (1.3036 in)
MID	36.377 mm (1.4322 in)	35.720 mm (1.4063 in)
SECONDARY	34.547 mm (1.3601 in)	34.381 mm (1.3536 in)

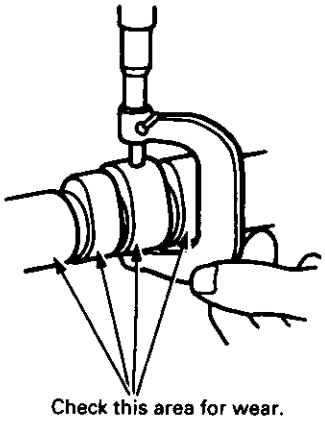

Cam Position

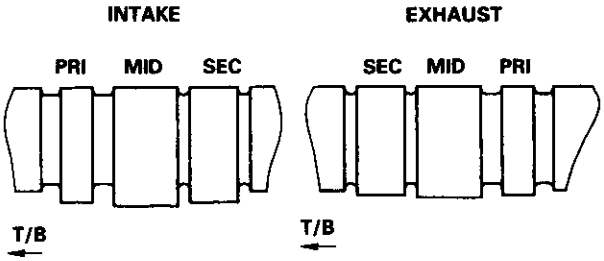

T/B: TIMING BELT
PRI: PRIMARY
MID: MID
SEC: SECONDARY

Removal

NOTE: Identify valves and valve springs as they are removed so that each item can be reinstalled in its original position.

1. Using an appropriate-sized socket and plastic mallet, lightly tap the valve retainer to loosen the valve keepers before installing the valve spring compressor.

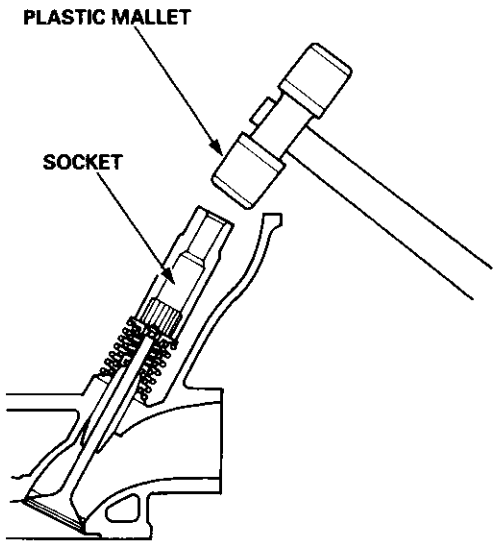

2. Install spring compressor. Compress spring and remove valve keeper.

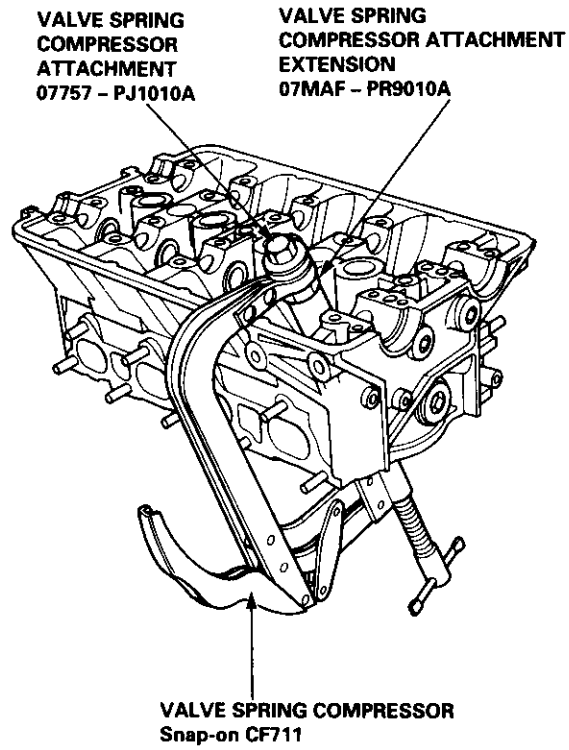

(cont'd)

Removal (cont'd)

3. Install the special tool as shown.

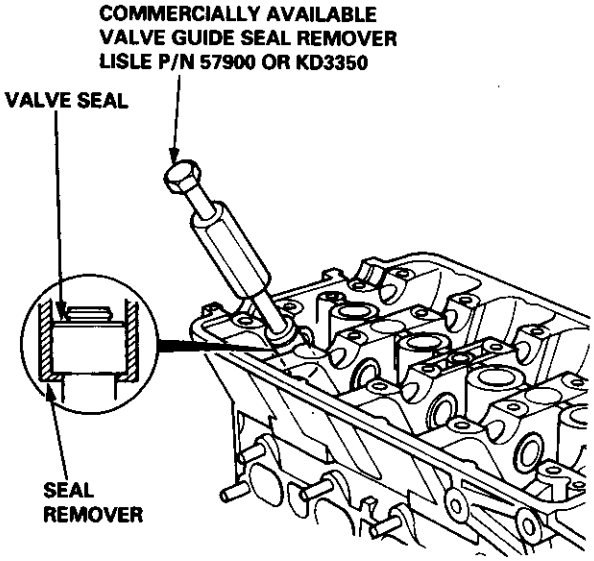

4. Remove the valve guide seal.

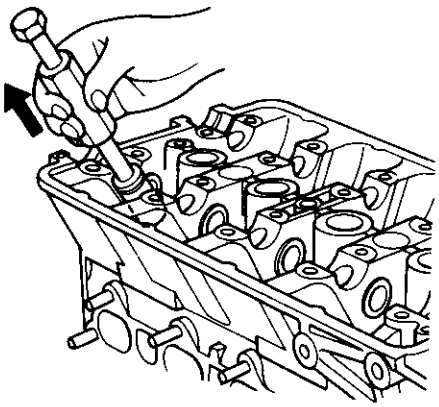

Valve Dimensions

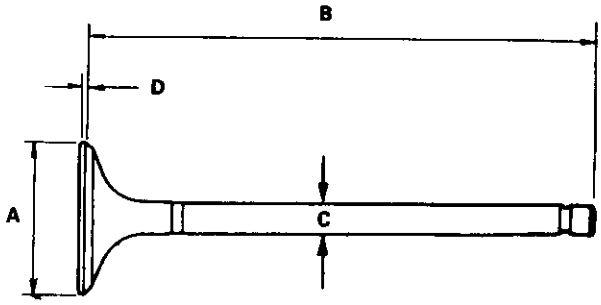

Intake Valve

A Standard (New):	32.90 – 33.10 mm (1.295 – 1.303 in)
B Standard (New):	101.00 – 101.30 mm (3.976 – 3.988 in)
C Standard (New):	5.475 – 5.485 mm (0.2156 – 0.2159 in)
C Service Limit:	5.445 (0.2144 in)
D Standard (New):	1.05 – 1.35 mm (0.041 – 0.053 in)
D Service Limit:	0.85 mm (0.033 in)

Exhaust Valve

A Standard (New):	27.90 – 28.10 mm (1.098 – 1.106 in)
B Standard (New):	100.60 – 100.90 mm (3.961 – 3.972 in)
C Standard (New):	5.450 – 5.460 mm (0.2146 – 0.2150 in)
C Service Limit:	5.420 (0.2134 in)
D Standard (New):	1.65 – 1.95 mm (0.065 – 0.077 in)
D Service Limit:	1.45 mm (0.057 in)

Installation Sequence

NOTE: Exhaust and intake valve seals are NOT interchangeable.

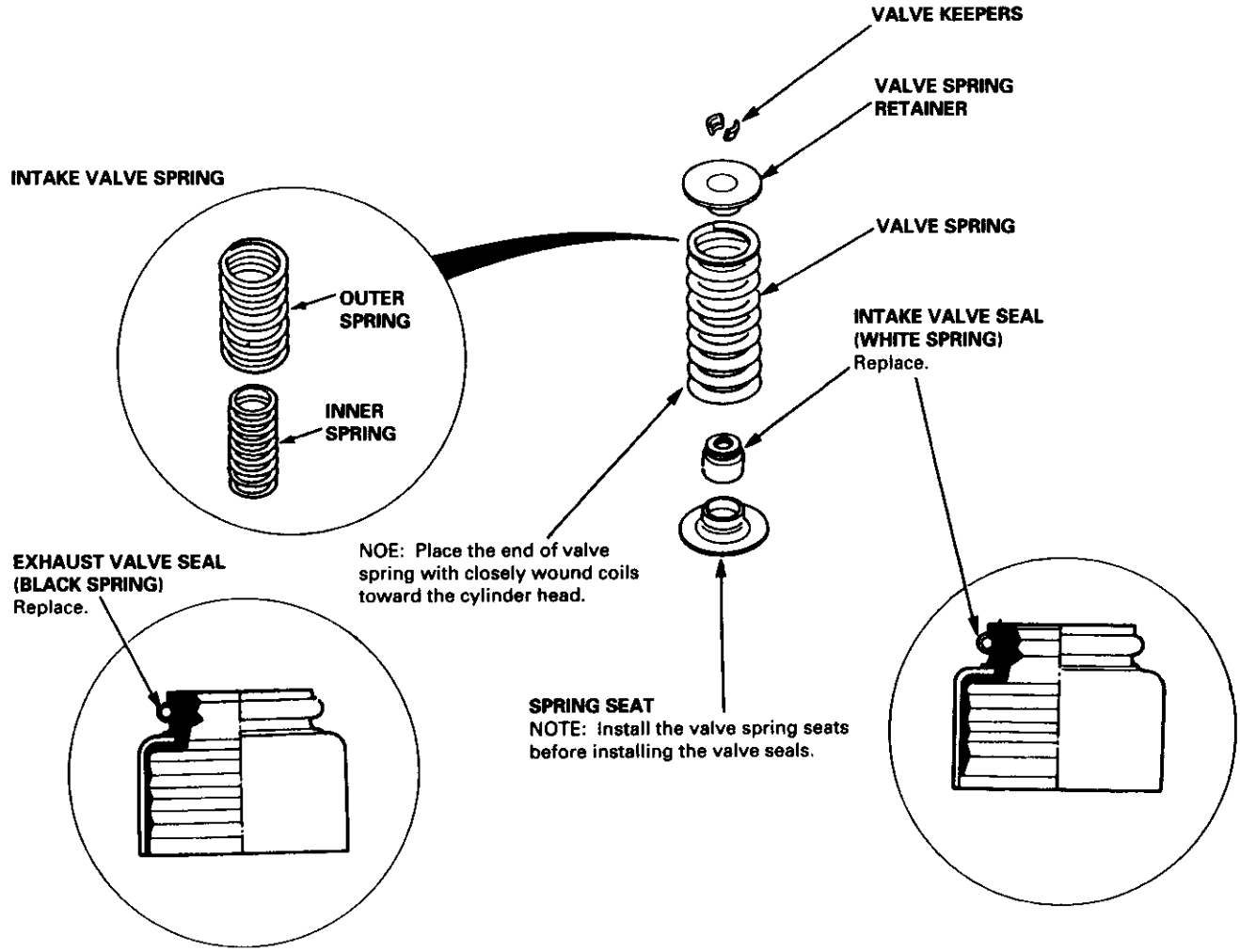

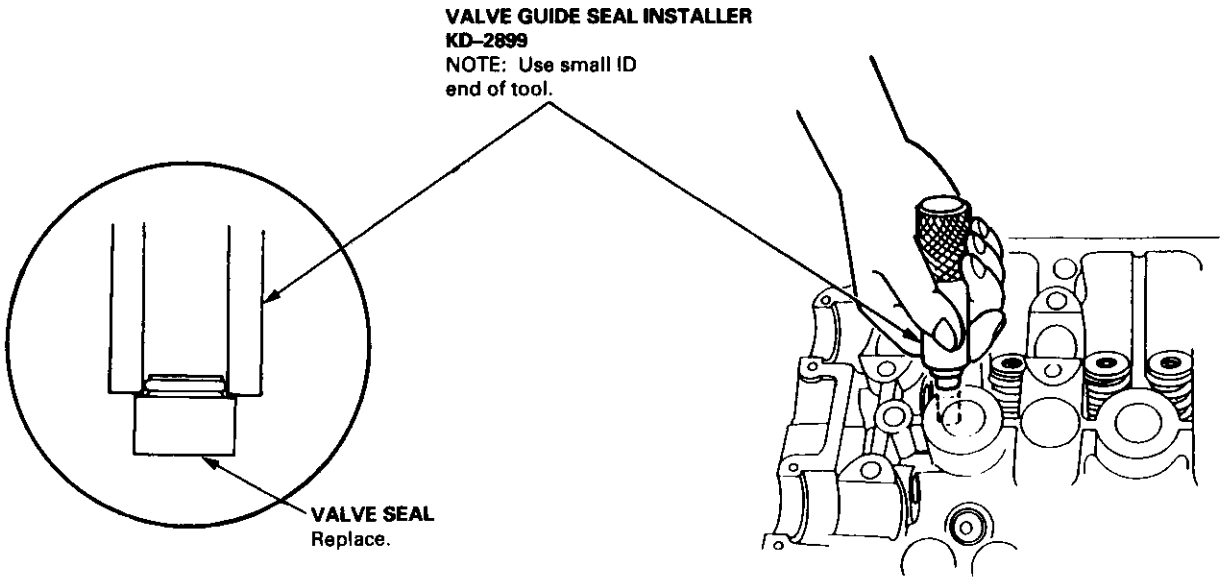

Valve Installation

- When installing valves in cylinder head, coat valve stems with oil before inserting into valve guides, and make sure valves move up and down smoothly.
- When valves and springs are in place, lightly tap the end of each valve stem two or three times to ensure proper seating of valve and valve keepers (use hammer handle).

NOTE: Tap the valve stem only along its axis so you do not bend the stem.

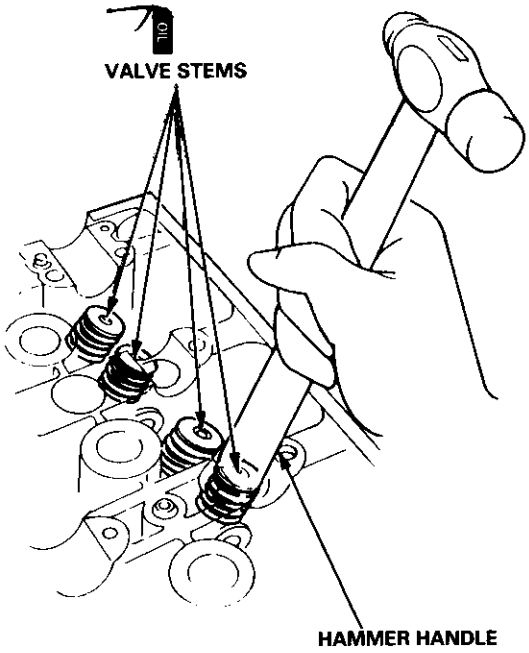

Valve Guides

Valve Movement

Measure the guide-to-stem clearance with a dial indicator while rocking the stem in the direction of normal thrust (wobble method).

Intake Valve Stem-to-Guide Clearance:
Standard (New): 0.05 – 0.11 mm (0.002 – 0.004 in)
Service Limit: 0.16 mm (0.006 in)

Exhaust Valve Stem-to-Guide Clearance:
Standard (New): 0.10 – 0.16 mm (0.004 – 0.006 in)
Service Limit: 0.22 (0.009 in)

Valve extended 10 mm out from seat.

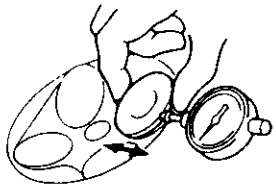

- If measurement exceeds the service limit, recheck using a new valve.
- If measurement is now within the service limit, reassemble using a new valve.
- If measurement still exceeds limit, recheck using alternate method below, then replace valve and guide, if necessary.

NOTE: An alternate method of checking guide to stem clearance is to subtract the O.D. of the valve stem, measured with a micrometer, from the I.D. of the valve guide, measured with an inside micrometer or ball gauge.
Take the measurements in three places along the valve stem and three places inside the valve guide. The difference between the largest guide measurement and the smallest stem measurement should not exceed the service limit.

Intake Valve Stem-to-Guide Clearance:
Standard (New): 0.025 – 0.055 mm (0.0010 – 0.0022 in)
Service Limit: 0.08 mm (0.003 in)

Exhaust Valve Stem-to-Guide Clearance:
Standard (New): 0.050 – 0.080 mm (0.0020 – 0.0031 in)
Service Limit: 0.11 mm (0.004 in)

Replacement

1. As illustrated in the removal steps of this procedure, use a commercially — available air-impact driver attachment modified to fit the diameter of the valve guides. In most cases, the same procedure can be done using the Valve Guide Driver and a conventional hammer.

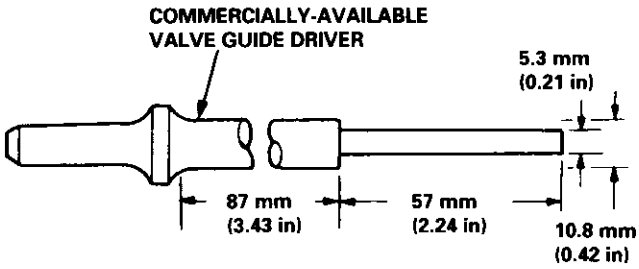

Removal and Installation
VALVE GUIDE DRIVER,
5.5 mm
07742 – 0010100

2. Select the proper replacement guides and chill them in the freezer section of a refrigerator for about an hour.

3. Use a hot plate or oven to evenly heat the cylinder head to 300°F (150°C). Monitor the temperature with a cooking thermometer.

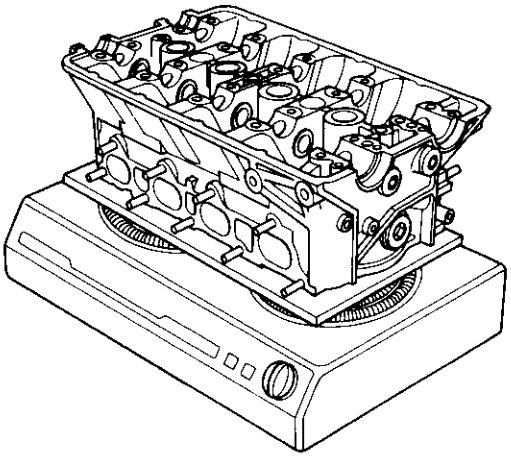

CAUTION:
- **Do not use a torch; it may warp the head.**
- **Do not get the head hotter than 300°F (150°C); excessive heat may loosen the valve seats.**
- **To avoid burns, use heavy gloves when handling the heated cylinder head.**

4. Working from the camshaft side, use the driver and an air hammer to drive the guide about 2 mm (0.1 in) towards the combustion chamber. This will knock off some of the carbon and make removal easier.

CAUTION:
- **Always wear safety goggles or a face shield when using the air hammer.**
- **Hold the air hammer directly in line with the valve guide to prevent damaging the driver.**

5. Turn the head over and drive the guide out toward the camshaft side of head.

If a valve guide still won't move, drill it out with a 8.0 mm (5/16 in) bit, then try again.

CAUTION: Drill guides only in extreme cases: you could damage the cylinder head if the guide breaks.

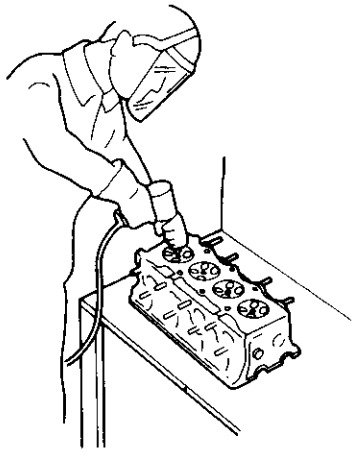

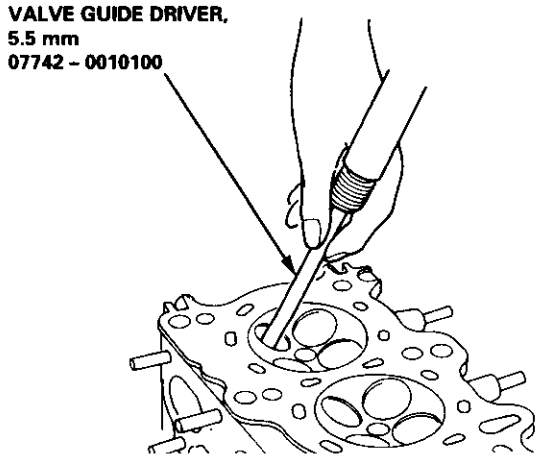

6. Remove the new guide(s) from the refrigerator, one at a time, as you need them.

(cont'd)

Valve Guides

Replacement (cont'd)

7. Slip a 6 mm (0.2 in) steel washer and the correct driver attachment over the end of the driver (The washer will absorb some of the impact and extend the life of the driver).

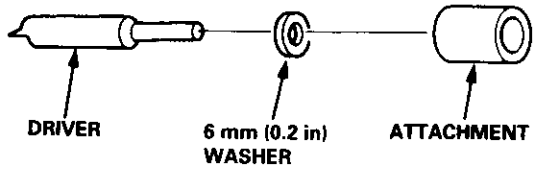

8. Install the new guide(s) from the camshaft side of the head; drive each one in until the attachment bottoms on the head. If you have all sixteen guides to do, you may have to reheat the head one or two more times.

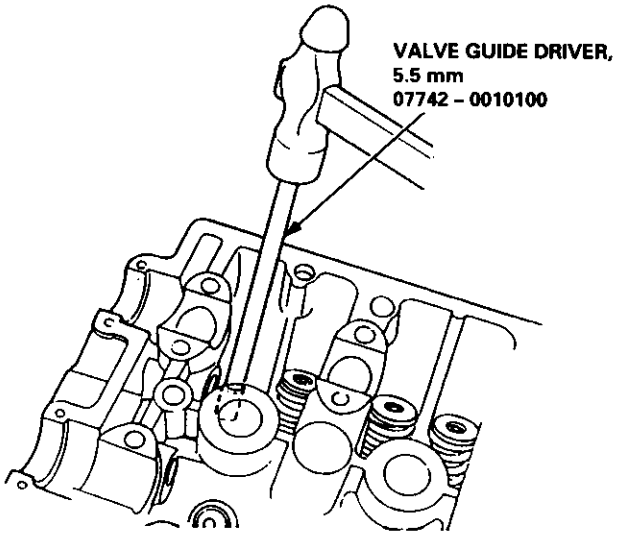

Valve Guide Installed Height:
Intake: 12.55 - 13.05 mm (0.494 - 0.514 in)
Exhaust: 12.55 - 13.05 mm (0.494 - 0.514 in)

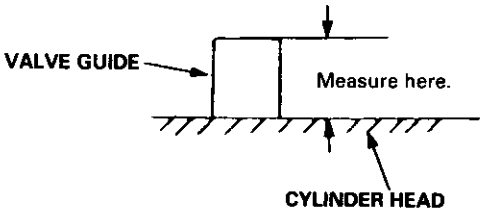

Reaming

NOTE: For new valve guides only.

1. Coat both reamer and valve guide with cutting oil.
2. Rotate the reamer clockwise the full length of the valve guide bore.
3. Continue to rotate the reamer clockwise while removing it from the bore.
4. Thoroughly wash the guide in detergent and water to remove any cutting residue.
5. Check clearance with a valve (see page 6-70).
   - Verify that the valve slides in the intake and exhaust valve guides without exerting pressure.

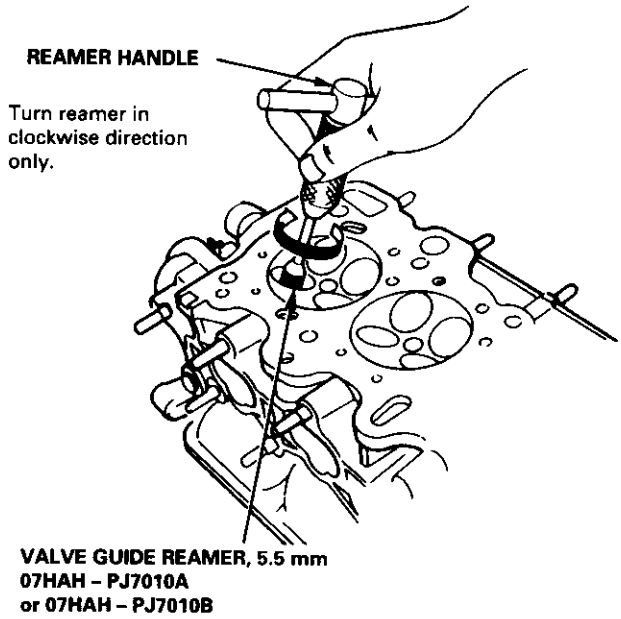

Valve Seats

Reconditioning

1. Renew the valve seats in the cylinder head using valve seat cutters.

   NOTE: If guides are worn, replace them before cutting the valve seats.

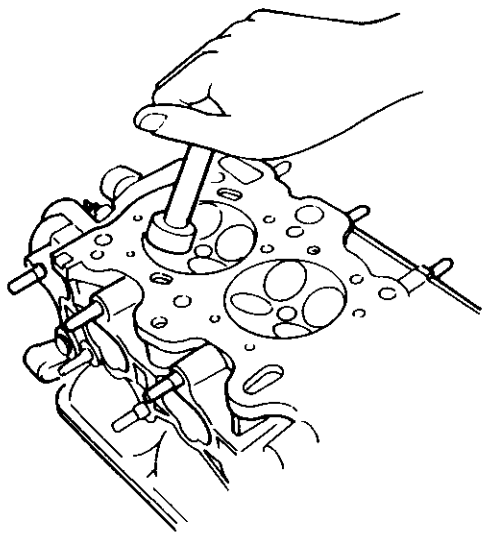

2. Carefully cut a 45° seat, removing only enough material to ensure a smooth and concentric seat.

3. Bevel the upper edge of the seat with the 30° cutter and the lower edge of the seat with the 60° cutter. Check width of seat and adjust accordingly.

4. Make one more very light pass with the 45° cutter to remove any possible burrs caused by the other cutters.

   Valve Seat Width:
   Standard: 1.25 – 1.55 mm (0.049 – 0.061 in)
   Service Limit: 2.0 mm (0.08 in)

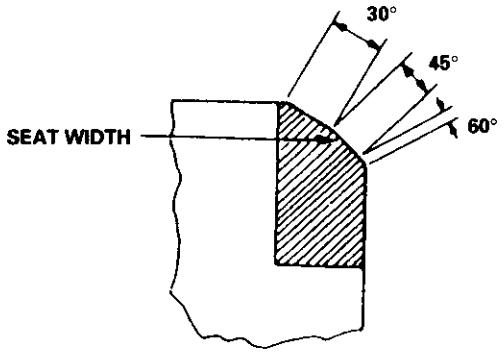

5. After resurfacing the seat, inspect for even valve seating: Apply Prussian Blue Compound to the valve face, and insert valve in original location in the head, then lift it and snap it closed against the seat several times.

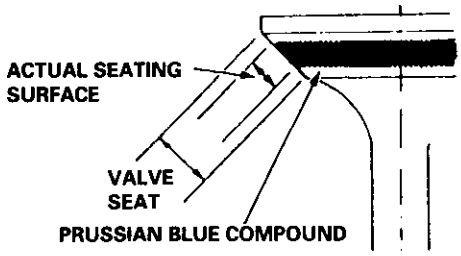

6. The actual valve seating surface, as shown by the blue compound, should be centered on the seat.
   - If it is too high (closer to the valve stem), you must make a second cut with the 60° cutter to move it down, then one more cut with the 45° cutter to restore seat width.
   - If it is too low (closer to the valve edge), you must make a second cut with the 30° cutter to move it up, then one more cut with the 45° cutter to restore seat width.

   NOTE: The final cut should always be made with the 45° cutter.

7. Insert intake and exhaust valves in the head and measure valve stem installed height.

   Intake Valve Stem Installed Height:
   Standard (New): 37.465 – 37.935 mm (1.4750 – 1.4935 in)
   Service Limit: 38.185 mm (1.5033 in)
   Exhaust Valve Stem Installed Height:
   Standard (New): 37.165 – 37.635 mm (1.4632 – 1.4817 in)
   Service Limit: 37.885 (1.4915 in)

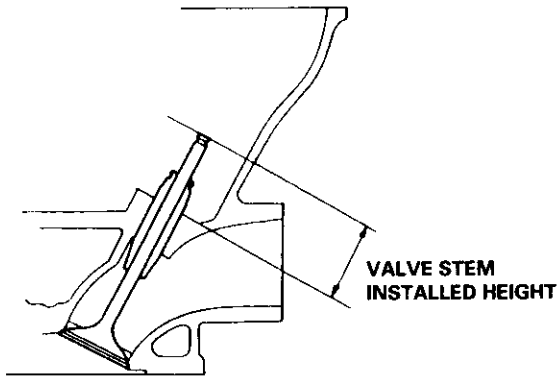

8. If valve stem installed height is over the service limit, replace valve and recheck. If still over the service limit, replace cylinder head; the valve seat in the head is too deep.

Warpage

NOTE: If camshaft-to-holder oil clearances (see page 6-65) are not within specification, the head cannot be resurfaced.

If camshaft-to-holder oil clearances are within specifications, check the head for warpage.

- If warpage is less than 0.05 mm (0.002 in) cylinder head resurfacing is not required.
- If warpage is between 0.05 mm (0.002 in) and 0.2 mm (0.008 in), resurface cylinder head.
- Maximum resurface limit is 0.2 mm (0.008 in) based on a height of 142 mm (5.59 in).

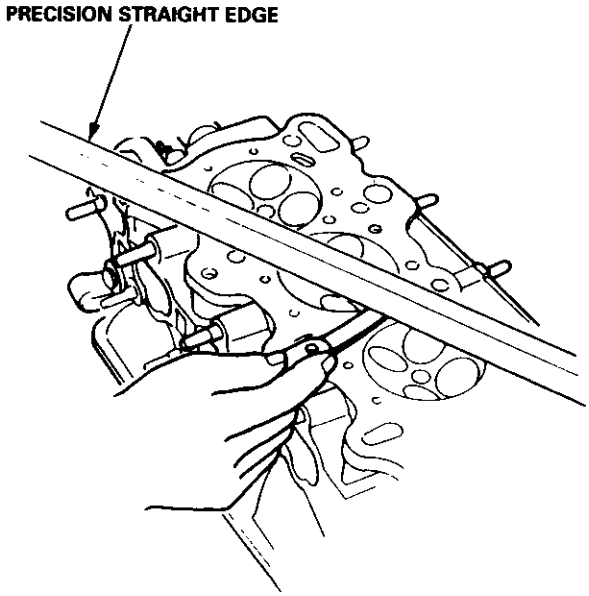

Measure along edges, and 3 ways across center.

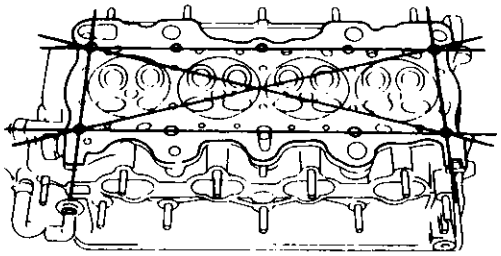

Cylinder Head Height:
Standard (New): 141.95 – 142.05 mm (5.589 – 5.593 in)

Installation

Install the cylinder head in the reverse order of removal:

NOTE:
- Always use a new head and manifold gasket.
- The cylinder head gasket is a metal gasket. Take care not to bend it.
- Rotate the crankshaft, set the No. 1 piston at TDC (page 6-51).
- Do not use the middle cover and lower cover for storing items disassembled.
- Clean the middle cover and lower cover before installation.
- Replace the washer when damaged or deteriorated.

1. Install the cylinder head gasket, dowel pins and the head oil control orifice on the cylinder head.

   NOTE: Clean the oil control orifice when installing.

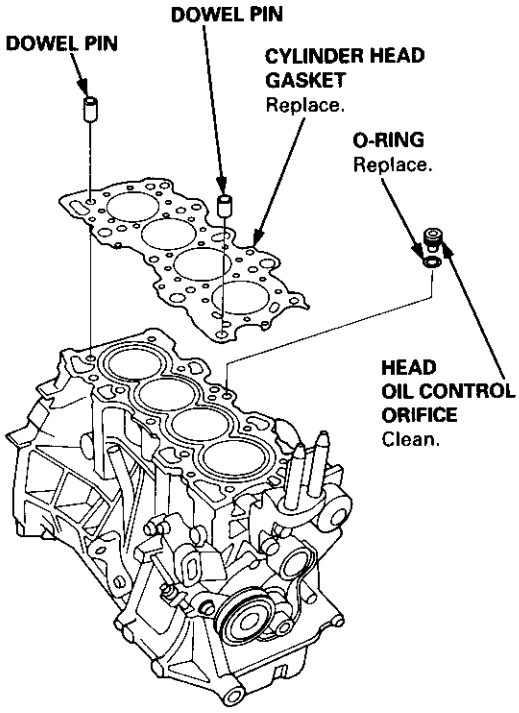

2. Tighten cylinder head bolts in two steps. In the first step, tighten all bolts in sequence to about 29 N·m (3.0 kgf·m, 22 lbf·ft). In the final step, tighten in same sequence to 81 N·m (8.3 kgf·m, 60 lbf·ft).

   NOTE: Apply clean engine oil to the bolt threads and under the bolt head.

   CYLINDER HEAD BOLT TORQUE SEQUENCE

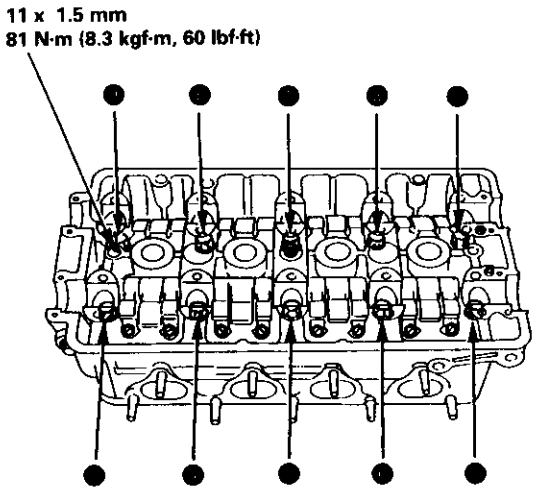

3. Install the intake manifold and tighten the nuts in a crisscross pattern in two or three steps, beginning with the inner nuts.

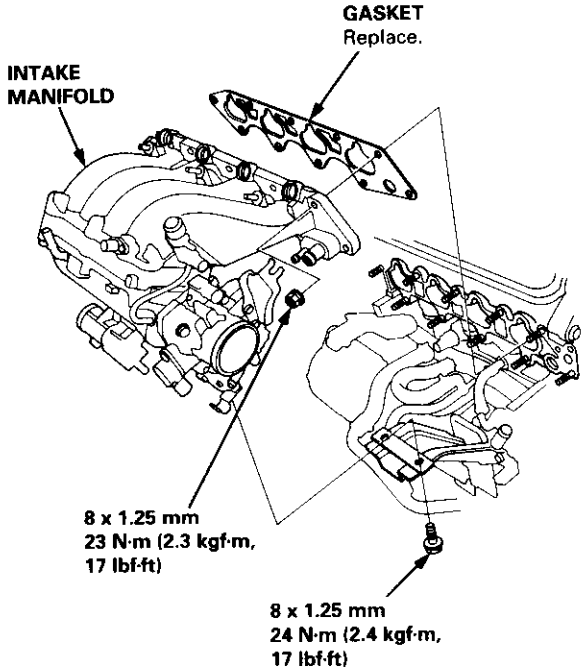

(cont'd)

Installation (cont'd)

4. Install the exhaust manifold and tighten the new self-locking nuts in a crisscross pattern in two or three steps, beginning with the inner nuts.

   - Use new self-locking nuts.

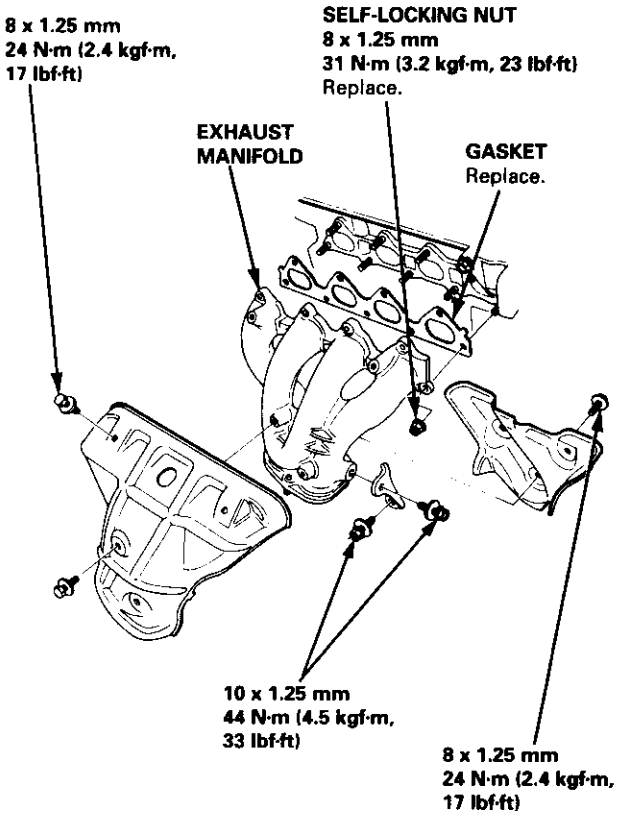

5. Install the camshafts, camshaft oil seals and rubber cap.

   NOTE:
   - Install the camshafts with keyway facing up.
   - Install the oil seal with the spring side facing in.
   - The oil seal housing surface should be dry.
   - Set the O-ring and dowel pin in the oil passage of the No. 3 camshaft holder.

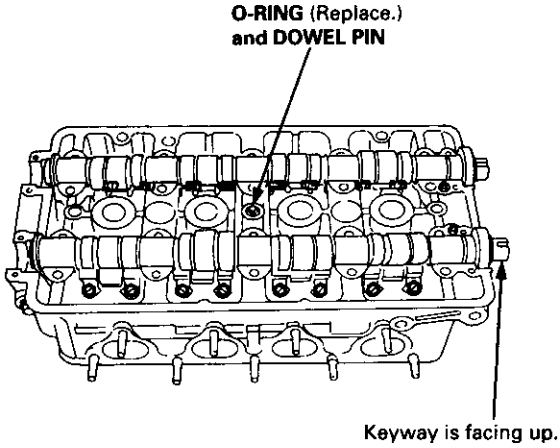

6. Apply liquid gasket around the rubber cap, then install the rubber cap.

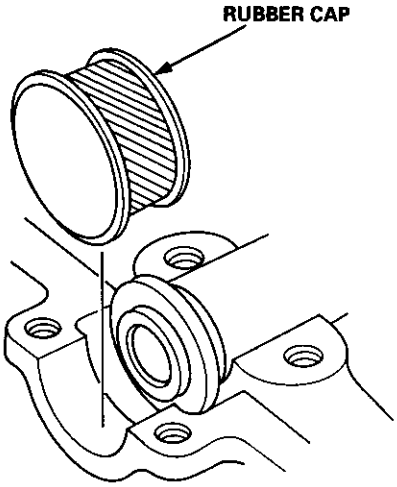

7. Apply liquid gasket to the head mating surface of the No. 1 and No. 5 camshaft holders on both the intake and exhaust side. Confirm that the camshaft keyways face up, then place those holders, together with the No. 2, No. 3 and No. 4 camshaft holders, on the cylinder head.

NOTE: The arrows marked on the camshaft holders should point to the timing belt.

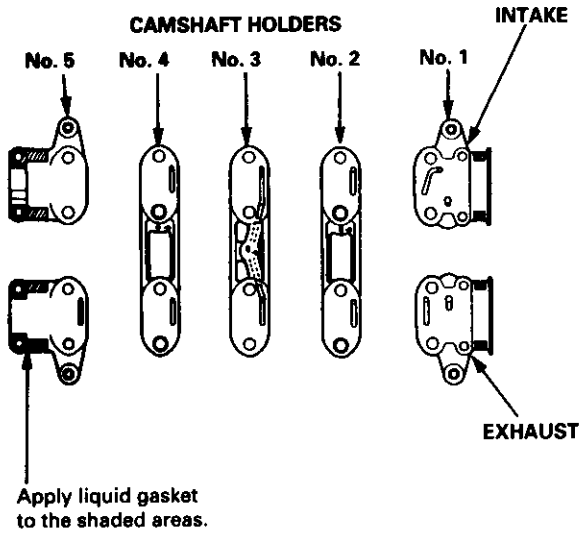

8. Temporarily tighten the bolts of the camshaft holders and the camshaft holder plates.

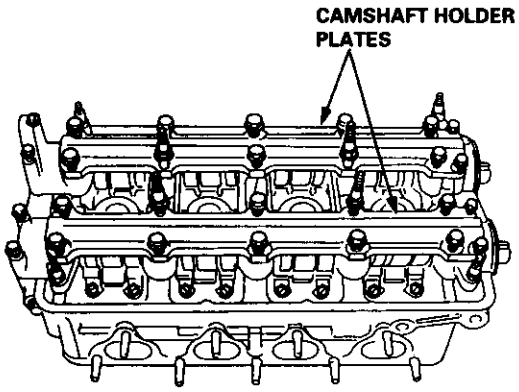

9. Tighten the bolts in the sequence shown below.

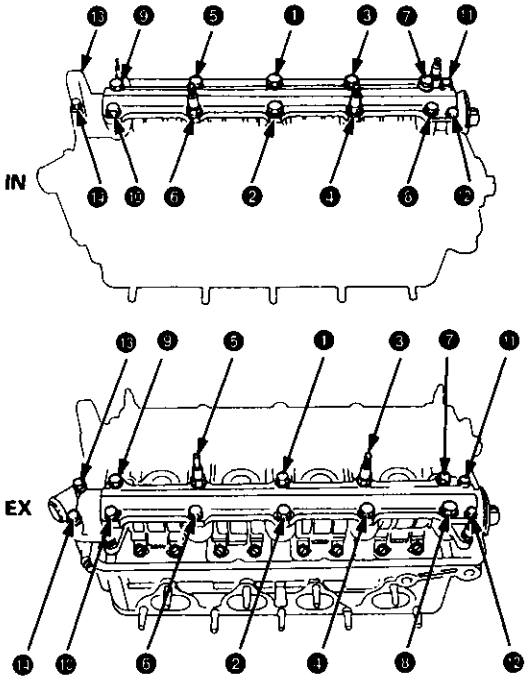

❶ – ❿: 8 x 1.25 mm 27 N·m (2.8 kgf·m, 20 lbf·ft)
⓫ – ⓬: 6 x 1.0 mm 9.8 N·m (1.0 kgf·m, 7.2 lbf·ft)

10. Install the back cover and camshaft pulleys.

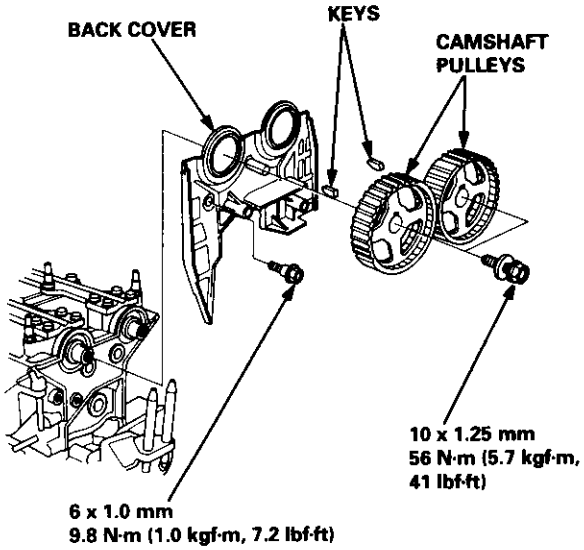

(cont'd)

Installation (cont'd)

11. Install the timing belt (see page 6-51).

12. Adjust the valve clearance (see page 6-44).

13. Install the rubber seal in the groove of the cylinder head cover. Seat the seal in the recesses for the camshaft first, then work it into the groove around the outside edges.

    NOTE:
    - Before installing the rubber seal, thoroughly clean the seal and the groove.
    - When installing, make sure the seal is seated securely in the corners of the recesses with no gap.

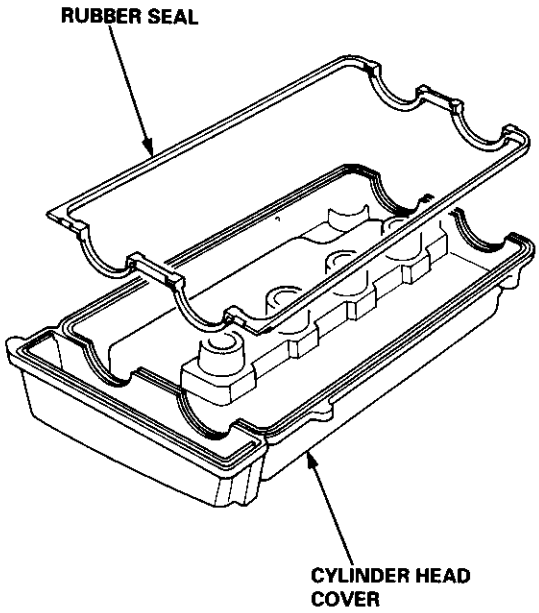

14. Apply liquid gasket to the rubber seal at the eight corners of the recesses.

    NOTE:
    - Use liquid gasket, Part No. 08718 - 0001.
    - Check that the mating surfaces are clean and dry before applying liquid gasket.
    - Do not install the parts if 20 minutes or more have elapsed since applying liquid gasket. Instead, reapply liquid gasket after removing old residue.
    - After assembly, wait at least 20 minutes before filling the engine with oil.

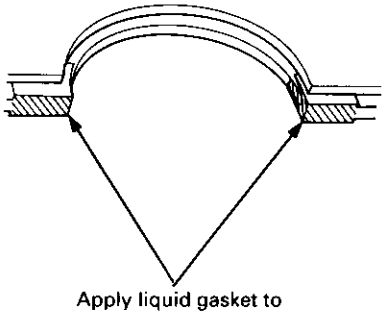

Apply liquid gasket to the shaded areas.

15. When installing the cylinder head cover, hold the rubber seal in the groove by placing your fingers on the camshaft contacting surfaces (top of the semi-circles).
Once the cylinder head cover is on the cylinder head, slide the cover slightly back and forth to seat the rubber seal.

NOTE:
- Before installing the cylinder head cover, clean the cylinder head contacting surfaces using a shop towel.
- Do not touch the parts where liquid gasket was applied.

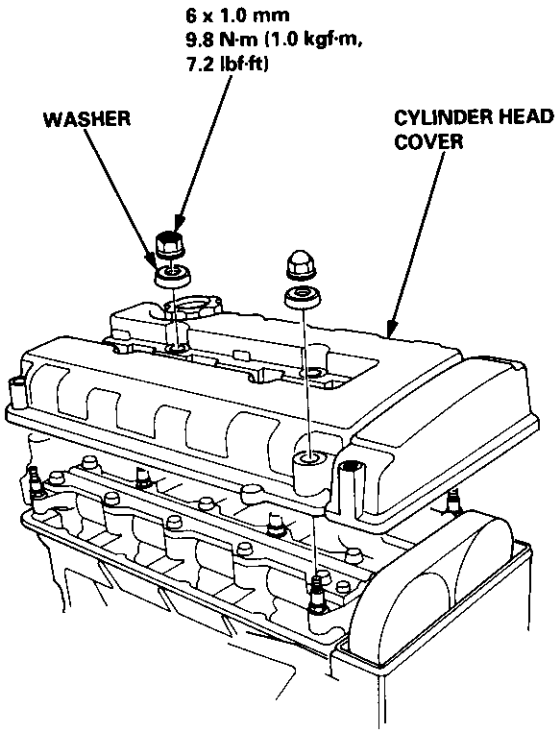

16. Tighten the nuts in 2 or 3 steps. In the final step, tighten all nuts, in sequence, to 9.8 N·m (1.0 kgf·m, 7.2 lbf·ft).

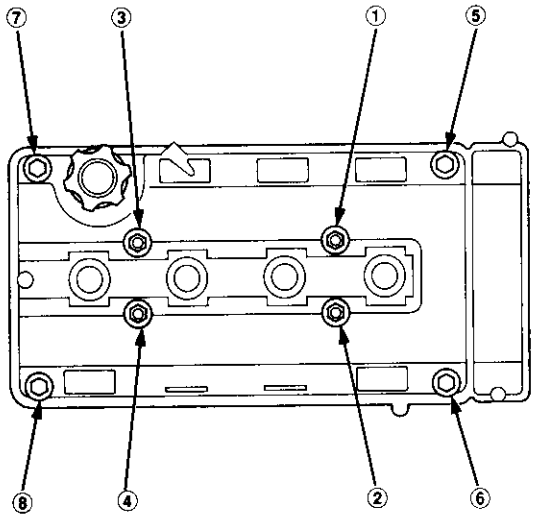

17. After installing, check that all tubes, hoses and connectors are installed correctly.

Engine Block

Special Tools 7-2
Illustrated Index 7-3
Flywheel and Drive Plate
  Replacement 7-7
Main Bearings
  Clearance 7-8
  Selection 7-8
Connecting Rod Bearings
  Clearance 7-9
  Selection 7-9
Crankshaft
  Removal 7-10
  End Play 7-12
  Inspection 7-12
  Installation 7-22
Cylinder Block
  Inspection 7-13
  Bore Honing 7-14
Pistons
  Inspection 7-15
  Installation 7-16
Piston Rings
  Replacement 7-16
  End Gap 7-17
  Ring-To-Groove Clearance 7-17
  Alignment 7-18
Piston Pins
  Removal 7-18
  Installation (B18B1 engine) 7-19
  Installation (B18C1 engine) 7-20
  Inspection 7-20
Connecting Rods
  End Play 7-21
  Selection 7-22
Oil Seal
  Installation 7-25
  Installation
  (engine removal not required)..... 7-26

Ref. No.	Tool Number	Description	Qty	Page Reference
①	07GAF – PF60300	Piston Pin Base Insert	1	7-18, 19, 20
②	07HAF – PL20102	Piston Base Head	1	7-18, 19, 20
③	07LAD – PR4010A	Seal Driver	1	7-26
④	07LAF – PR30100	Pilot Collar	1	7-19, 20
⑤	07LAB – PV00100 or 07924 – PD20003 or 07924 – PD20002	Ring Gear Holder	1	7-7
⑥	07948 – SB00101	Driver Attachment	1	7-25, 26
⑦	07749 – 0010000	Driver	1	7-25, 26
⑧	07973 – PE00310	Piston Pin Driver Shaft	1	7-19, 20
⑨	07973 – PE00320	Piston Pin Driver Head	1	7-19, 20
⑩	07973 – 6570500	Piston Base	1	7-18, 19, 20
⑪	07973 – 6570600	Piston Base Spring	1	7-18

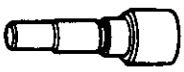
①

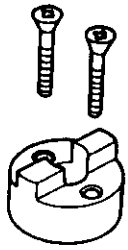
②

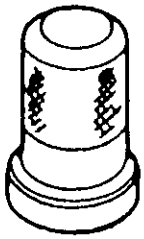
③

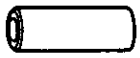
④

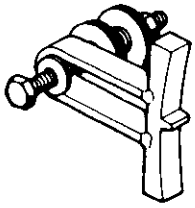
⑤

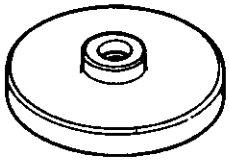
⑥

⑦

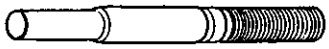
⑧

⑨

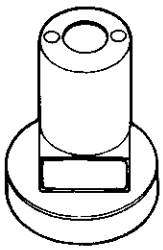
⑩

⑪

NOTE:
- Apply liquid gasket to the mating surfaces of the right side cover and oil pump housing before installing them.
- Use liquid gasket, Part No. 08718 – 0001.
- Clean the oil pan gasket mating surfaces before installing it.

Lubricate all internal parts with engine oil during reassembly.

B18B1 engine:

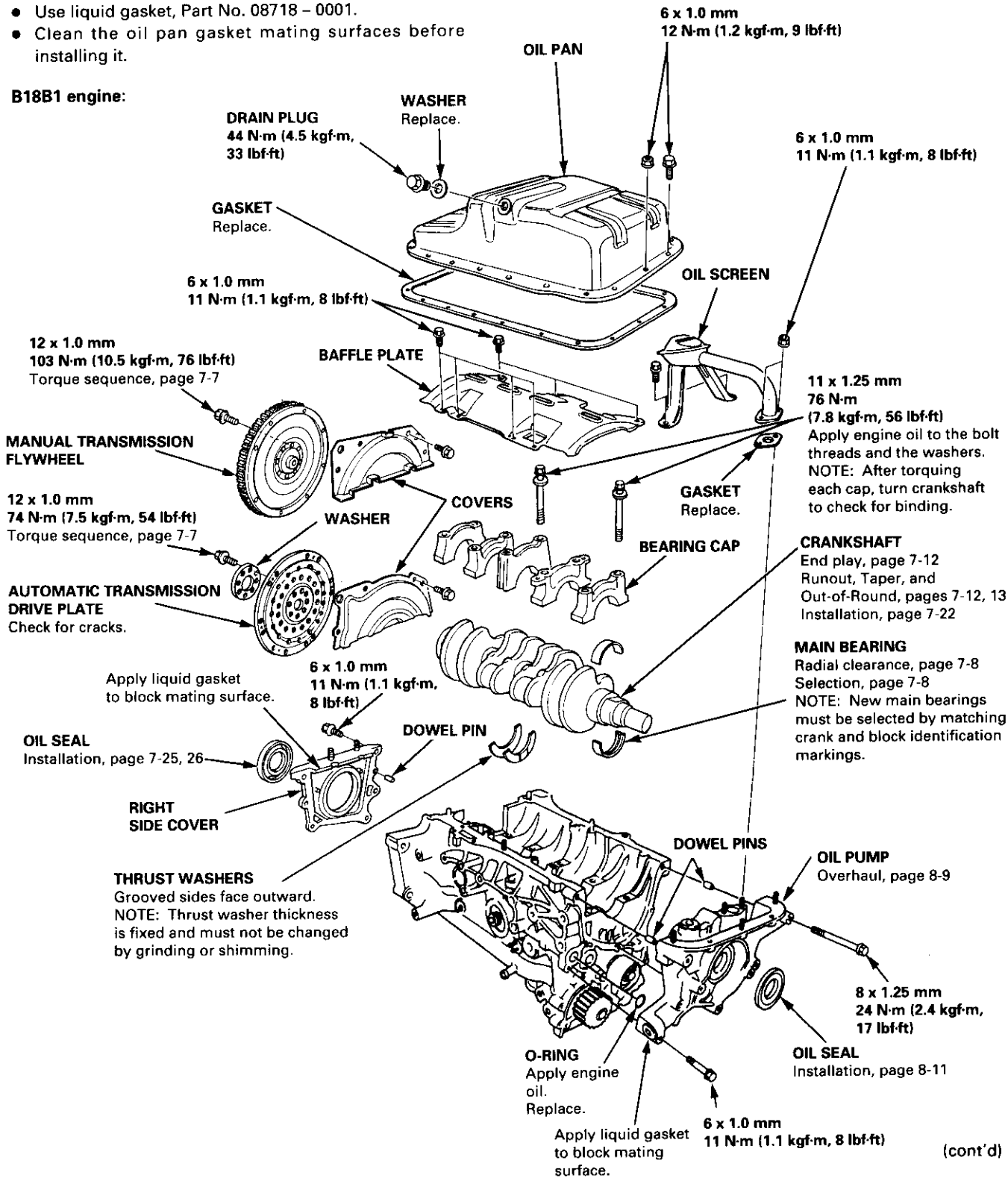

(cont'd)

NOTE:
- Apply liquid gasket to the mating surfaces of the right side cover and oil pump housing before installing them.
- Use liquid gasket, Part No. 08718 – 0001.
- Clean the oil pan gasket mating surfaces before installing it.

Lubricate all internal parts with engine oil during reassembly.

B18C1 engine:

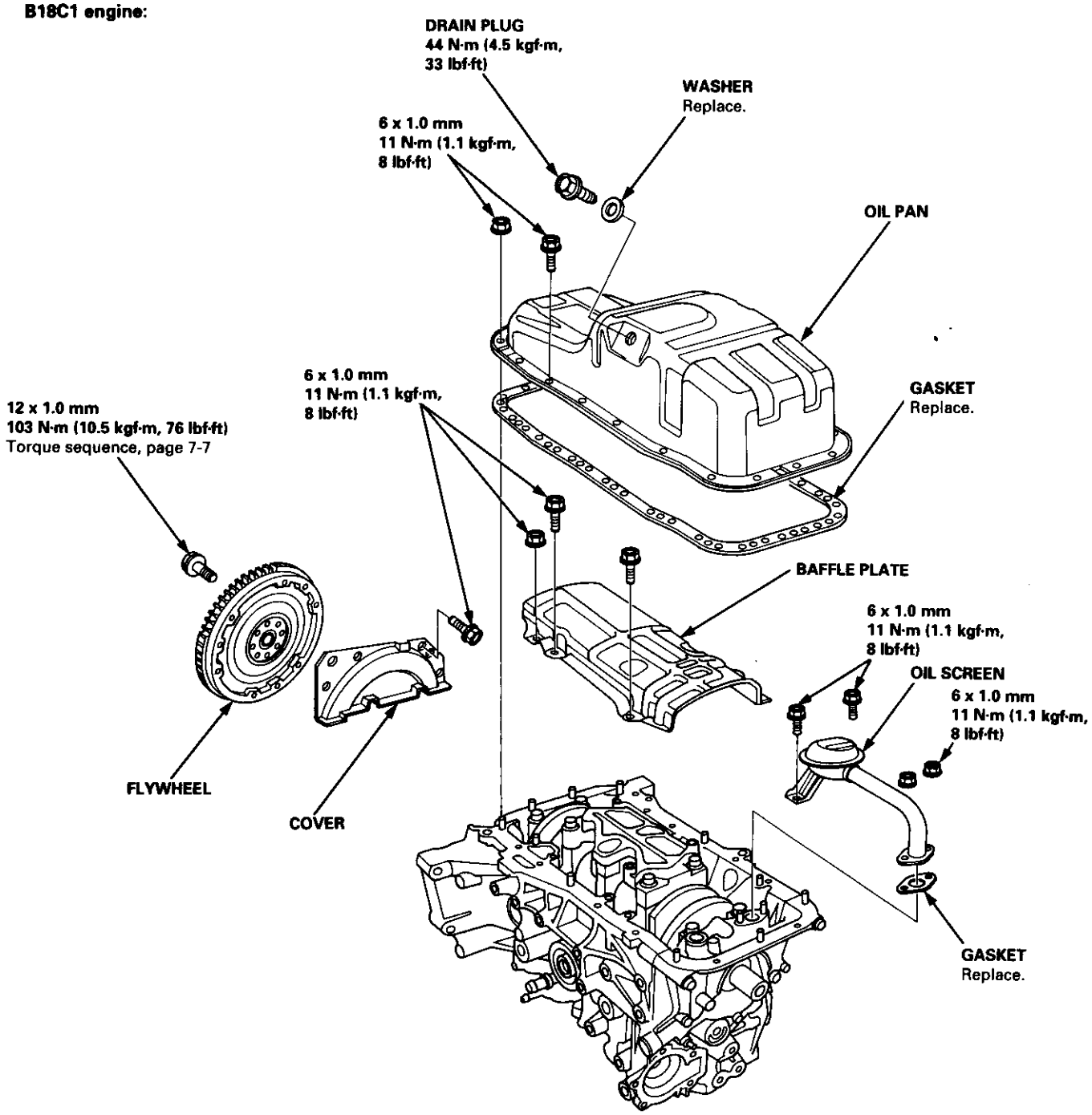

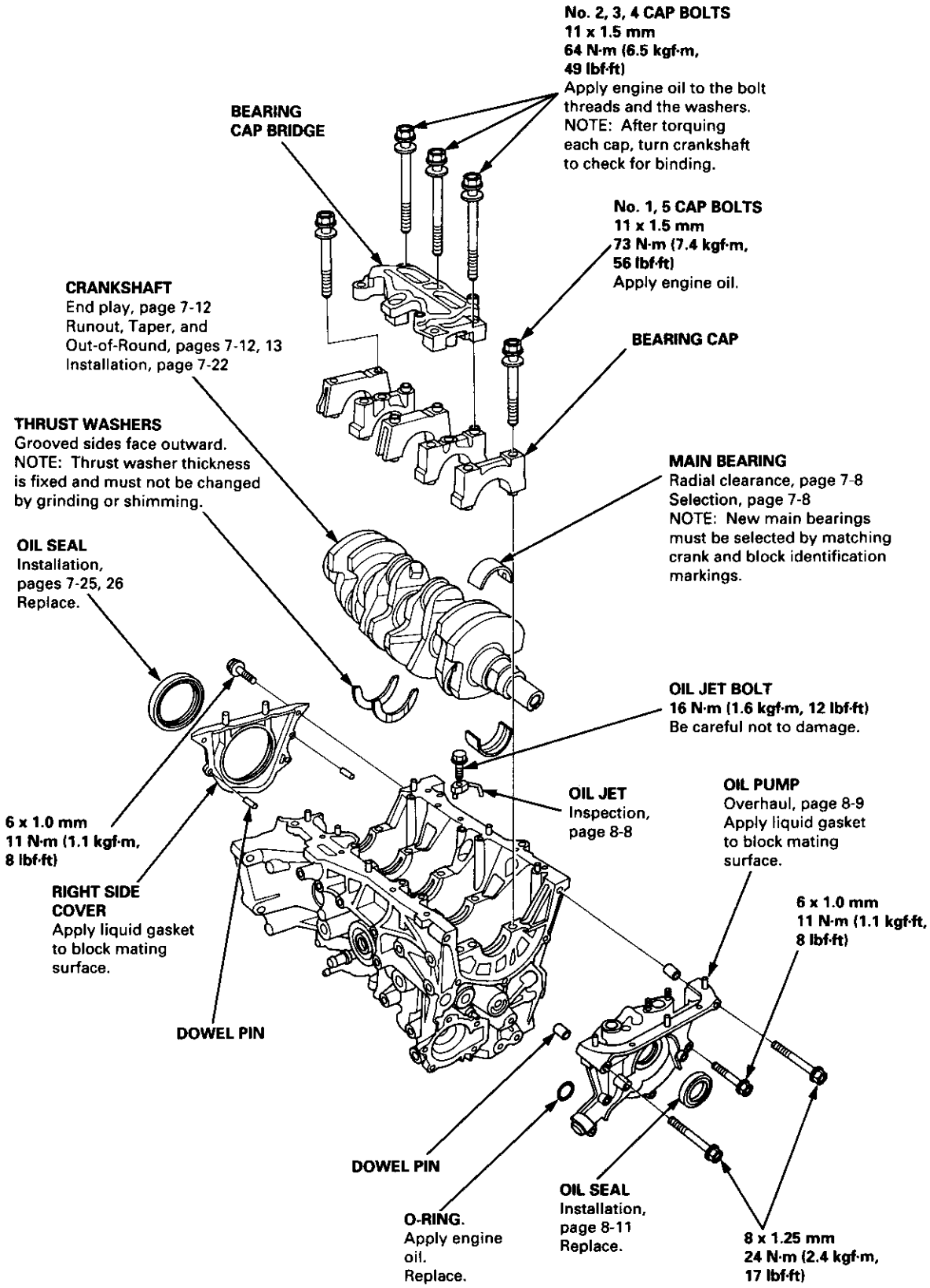
No. 2, 3, 4 CAP BOLTS
11 x 1.5 mm
64 N·m (6.5 kgf·m, 49 lbf·ft)
Apply engine oil to the bolt threads and the washers.
NOTE: After torquing each cap, turn crankshaft to check for binding.
BEARING CAP BRIDGE
No. 1, 5 CAP BOLTS
11 x 1.5 mm
73 N·m (7.4 kgf·m, 56 lbf·ft)
Apply engine oil.
CRANKSHAFT
End play, page 7-12
Runout, Taper, and Out-of-Round, pages 7-12, 13
Installation, page 7-22
BEARING CAP
THRUST WASHERS
Grooved sides face outward.
NOTE: Thrust washer thickness is fixed and must not be changed by grinding or shimming.
MAIN BEARING
Radial clearance, page 7-8
Selection, page 7-8
NOTE: New main bearings must be selected by matching crank and block identification markings.
OIL SEAL
Installation, pages 7-25, 26
Replace.
OIL JET BOLT
16 N·m (1.6 kgf·m, 12 lbf·ft)
Be careful not to damage.
OIL JET
Inspection, page 8-8
OIL PUMP
Overhaul, page 8-9
Apply liquid gasket to block mating surface.
6 x 1.0 mm
11 N·m (1.1 kgf·m, 8 lbf·ft)
RIGHT SIDE COVER
Apply liquid gasket to block mating surface.
6 x 1.0 mm
11 N·m (1.1 kgf·ft, 8 lbf·ft)
DOWEL PIN
DOWEL PIN
O-RING.
Apply engine oil.
Replace.
OIL SEAL
Installation, page 8-11
Replace.
8 x 1.25 mm
24 N·m (2.4 kgf·m, 17 lbf·ft)

(cont'd)

Illustrated Index

(cont'd)

NOTE: New rod bearings must be selected by matching connecting rod and crankshaft identification markings (see pages 7-8, 9)

Lubricate all internal parts with engine oil during reassembly.

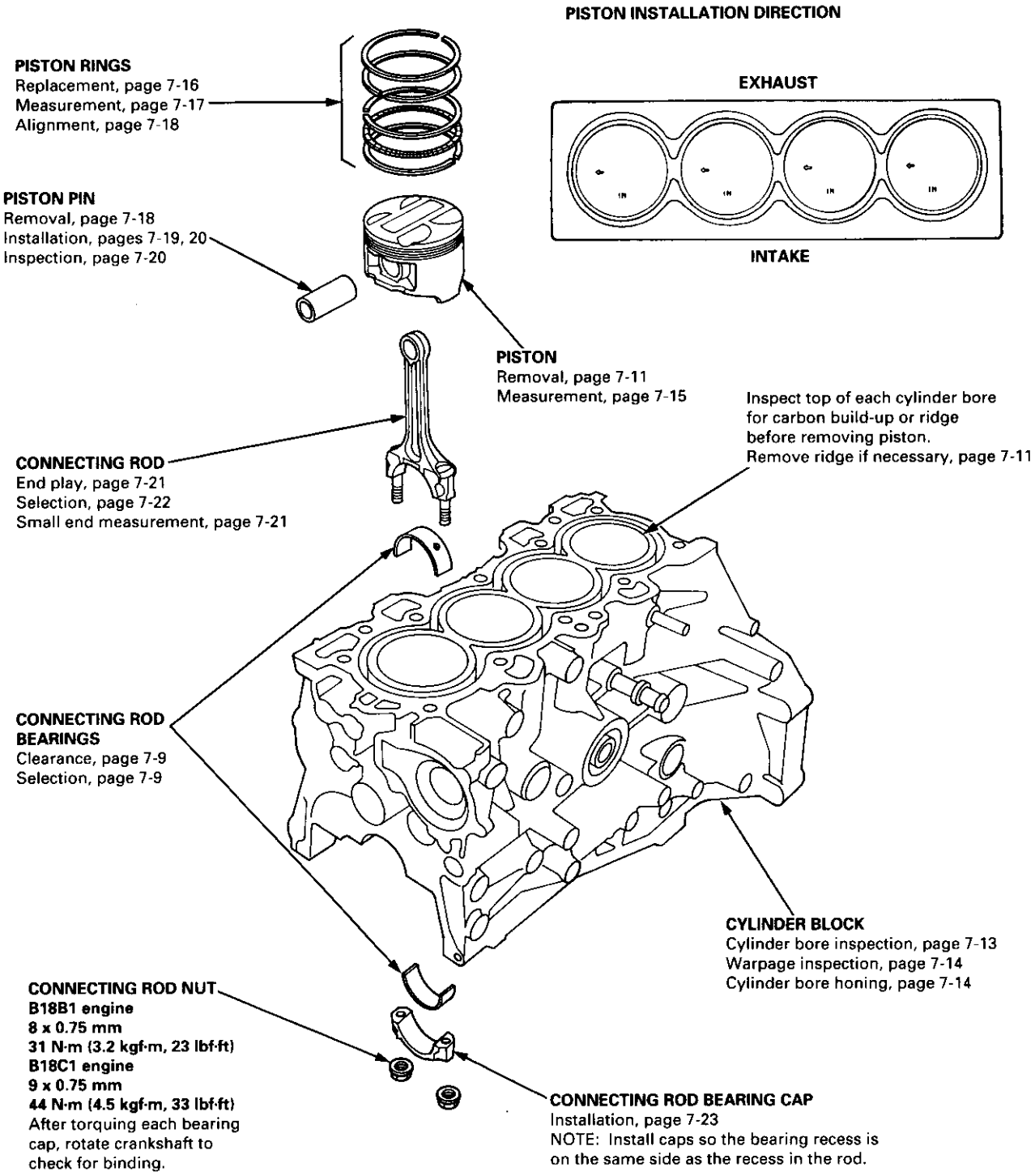

Replacement

Manual Transmission:

Remove the eight flywheel bolts, then separate the flywheel from the crankshaft flange. After installation, tighten the bolts in the sequence shown.

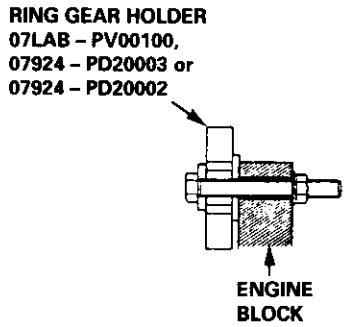

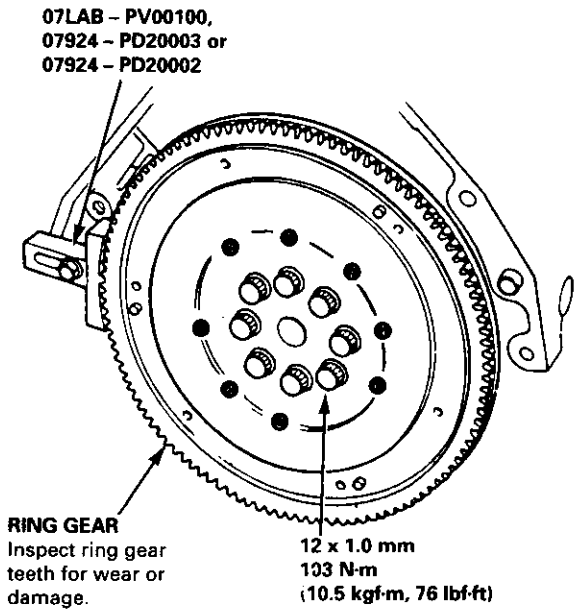

Automatic Transmission:

Remove the eight drive plate bolts, then separate the drive plate from the crankshaft flange. After installation, tighten the bolts in the sequence shown.

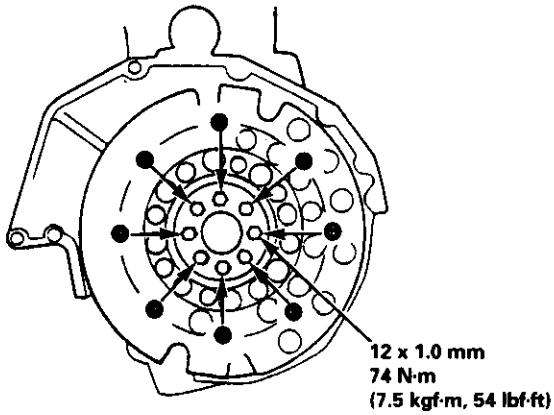

Main Bearings

Clearance

1. To check main bearing-to-journal oil clearance, remove the main caps and bearing halves.
2. Clean each main journal and bearing half with a clean shop towel.
3. Place one strip of plastigage across each main journal.
   NOTE: If the engine is still in the car when you bolt the main cap down to check clearance, the weight of the crankshaft and flywheel will flatten the plastigage further than just the torque on the cap bolt, and give you an incorrect reading. For an accurate reading, support the crank with a jack under the counterweights and check only one bearing at a time.
4. Reinstall the bearing caps and cap bridge (B18C1 engine only) then torque the bolts.
   B18B1 engine: 77 N·m (7.8 kgf·m, 56 lbf·ft)
   B18C1 engine:
   No. 1, 5 cap bolts 73 N·m (7.4 kgf·m, 56 lbf·ft)
   No. 2, 3, 4 cap bolts 64 N·m (6.5 kgf·m, 49 lbf·ft)
   NOTE: Do not rotate the crankshaft during inspection.
5. Remove the cap bridge (B18C1 engine only), caps and bearings again, and measure the widest part of the plastigage.
   Main Bearing-to-Journal Oil Clearance:
   Standard (New):
   No. 1, 2, 4, 5: 0.024 – 0.042 mm (0.0009 – 0.0017 in)
   Service Limit: 0.050 mm (0.0020 in)
   No. 3: 0.030 – 0.048 mm (0.0012 – 0.0019 in)
   Service Limit: 0.060 mm (0.0024 in)

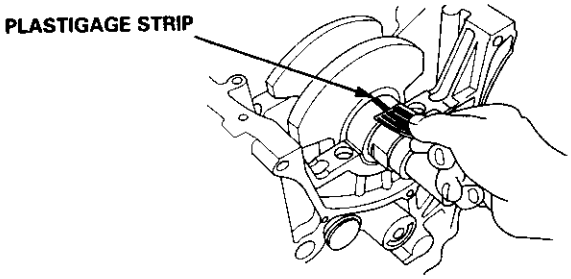

6. If the plastigage measures too wide or too narrow, (remove the engine if it's still in the car), remove the crankshaft, and remove the upper half of the bearing. Install a new, complete bearing with the same color code (select the color as shown in the right column), and recheck the clearance.
   CAUTION: Do not file, shim, or scrape the bearings or the caps to adjust clearance.
7. If the plastigage shows the clearance is still incorrect, try the next larger or smaller bearing (the color listed above or below that one), and check again.
   NOTE: If the proper clearance cannot be obtained by using the appropriate larger or smaller bearings, replace the crankshaft and start over.

Selection

CAUTION: If the codes are indecipherable because of an accumulation of dirt and dust, do not scrub them with a wire brush or scraper. Clean them only with solvent or detergent.

Crankshaft Bore Code Location

Letters have been stamped on the end of the block as a code for the size of each of the 5 main journal bores. Use them, and the numbers or bars stamped on the crank (codes for main journal size), to choose the correct bearings.

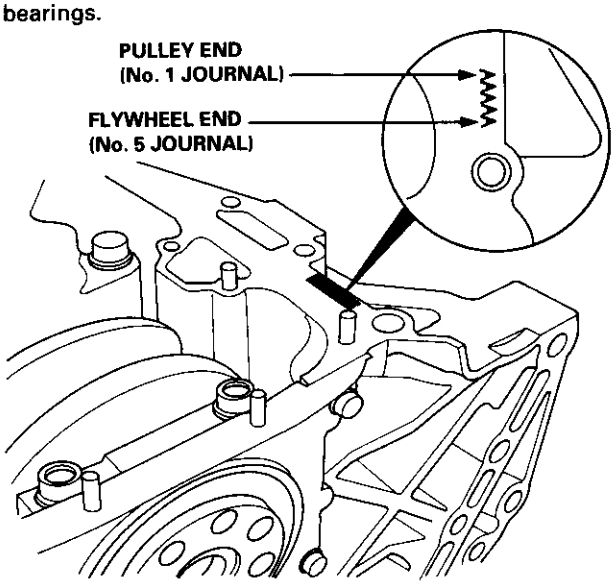

Main Journal Code Locations (Numbers or Bars)

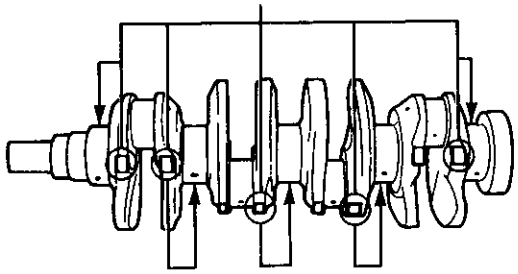

Bearing Identification
Color code is on the edge of the bearing.

Larger crank bore →

A	B	C	D

Smaller bearing (thicker) →

Smaller main journal	Smaller bearing (thicker)			
1 or I	Red	Pink	Yellow	Green
2 or II	Pink	Yellow	Green	Brown
3 or III	Yellow	Green	Brown	Black
4 or IIII	Green	Brown	Black	Blue

Connecting Rod Bearings

Clearance

1. Remove the connecting rod cap and bearing half.

2. Clean the crankshaft rod journal and bearing half with a clean shop towel.

3. Place the plastigage across the rod journal.

4. Reinstall the bearing half and cap, and torque the nuts.

   B18B1 engine: 31 N·m (3.2 kgf·m, 23 lbf·ft)
   B18C1 engine: 44 N·m (4.5 kgf·m, 33 lbf·ft)

   NOTE: Do not rotate the crankshaft during inspection.

   Connecting Rod Bearing-to-Journal Oil Clearance:
   B18B1 engine:
   Standard (New): 0.020 – 0.038 mm (0.0008 – 0.0015 in)
   Service Limit: 0.050 mm (0.0020 in)
   B18C1 engine:
   Standard (New): 0.032 – 0.050 mm (0.0013 – 0.0020 in)
   Service Limit: 0.060 mm (0.0024 in)

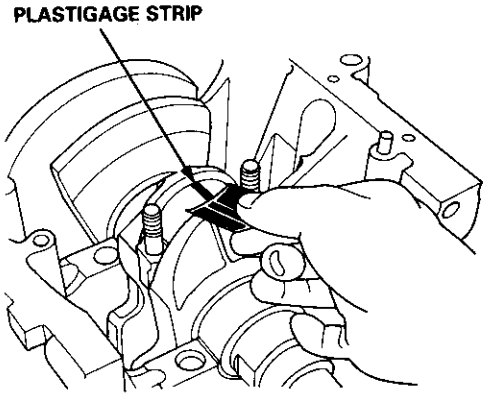

6. If the plastigage measures too wide or too narrow, remove the upper half of the bearing, install a new, complete bearing with the same color code (select the color as shown in the right column), and recheck the clearance.

   CAUTION: Do not file, shim, or scrape the bearing or the caps to adjust clearance.

7. If the plastigage shows the clearance is still incorrect, try the next larger or smaller bearing (the color listed above or below that one), and check clearance again.

   NOTE: If the proper clearance cannot be obtained by using the appropriate larger or smaller bearings, replace the crankshaft and start over.

Selection

CAUTION: If the codes are indecipherable because of an accumulation of dirt and dust, do not scrub them with a wire brush or scraper. Clean them only with solvent or detergent.

Connecting Rod Code Location

A number has been stamped on the side of each connecting rod as a code for the size of the big end. Use it, and the letters stamped on the crank (codes for rod journal size), to choose the correct bearings.

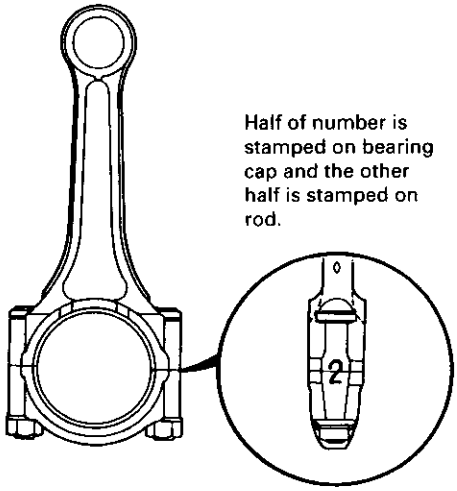

Connecting Rod Journal Code Locations (Letters or Bars)

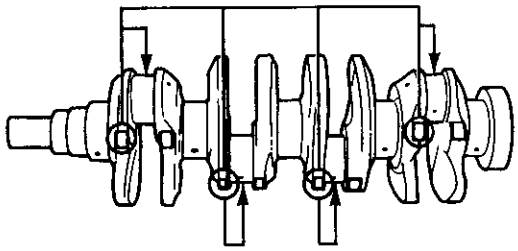

Bearing Identification
Color code is on the edge of the bearing.

Larger big end bore →

1	2	3	4

Smaller bearing (thicker) →

Smaller rod journal	1	2	3	4
A or I	Red	Pink	Yellow	Green
B or II	Pink	Yellow	Green	Brown
C or III	Yellow	Green	Brown	Black
D or IIII	Green	Brown	Black	Blue

Smaller rod journal ↓ Smaller bearing (thicker) ↓

Crankshaft

Removal

NOTE: End play for the connecting rods and crankshaft should be inspected before removing the crankshaft.

1. Remove the oil pan, oil screen and the oil pump.

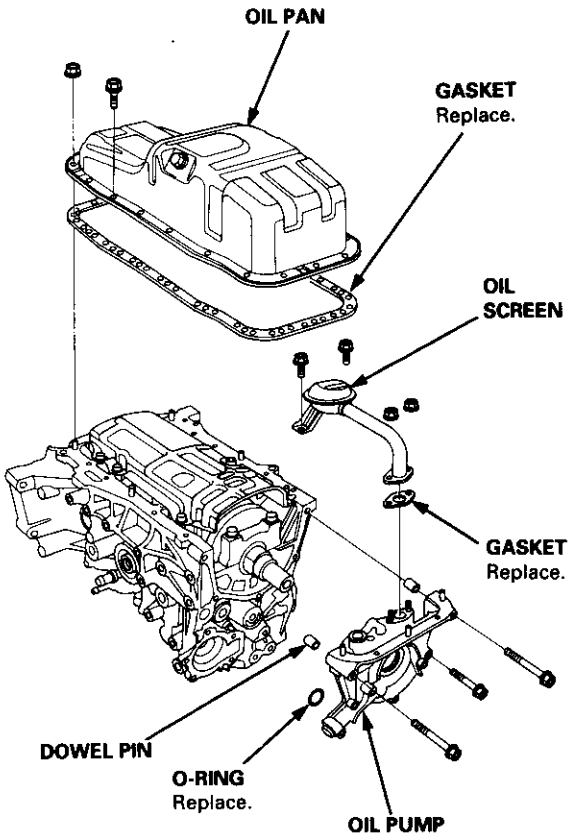

2. Remove the baffle plate.

3. Turn the crankshaft so No. 2 and 3 crankpins are at the bottom.

4. Remove the right side cover.

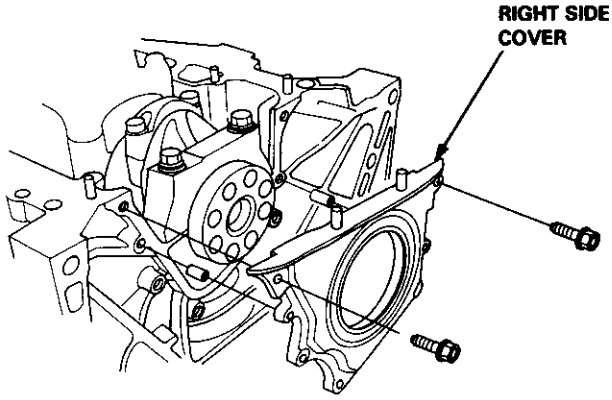

5. Remove the bearing cap bolts.

CAUTION: To prevent warpage, unscrew the bolts in sequence 1/3 turn at a time; repeat the sequence until all bolts are loosened.

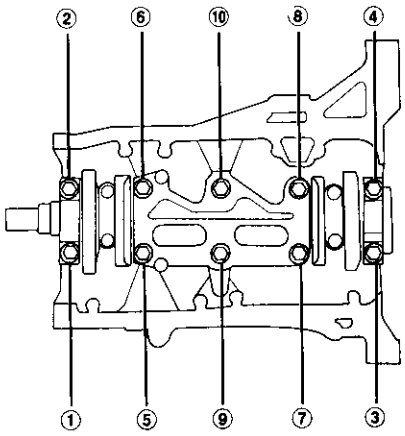

6. Remove the cap bridge (B18C1 engine only) and main caps/bearings. Keep all caps/bearings in order.

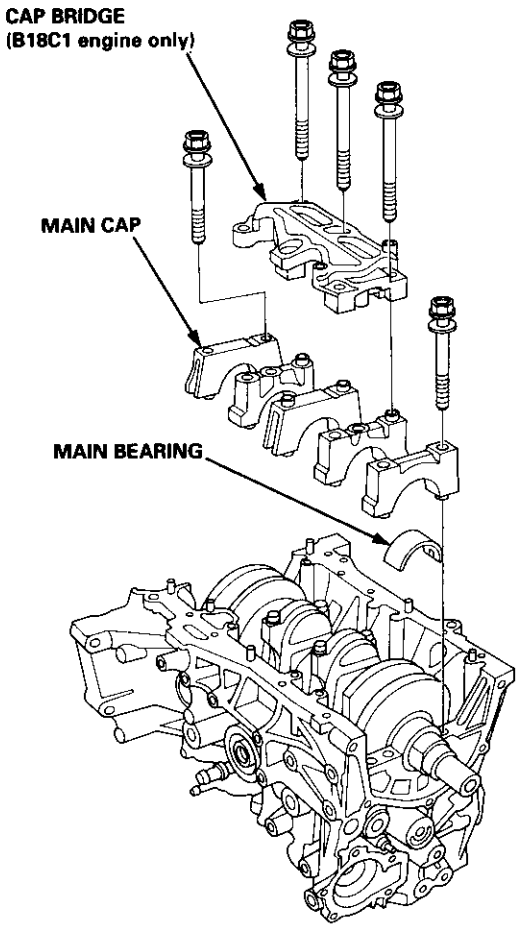

7. Remove the rod caps/bearings. Keep all caps/bearings in order.

8. Lift the crankshaft out of the engine, being careful not to damage journals.

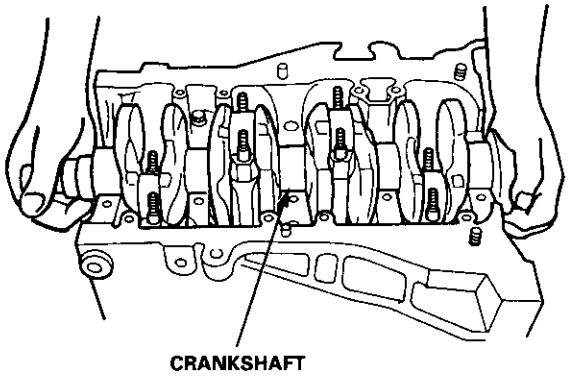

9. Remove the upper bearing halves from connecting rods and set them aside with their respective caps.

10. Reinstall main caps and bearings on the engine in proper order.

11. If you can feel a ridge of metal or hard carbon around the top of each cylinder, remove it with a ridge reamer.
Follow the reamer manufacturer's instructions.

CAUTION: If the ridge is not removed, it may damage the pistons as they are pushed out.

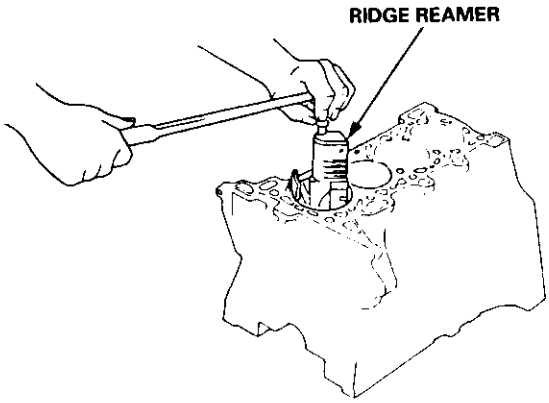

12. Use the wooden handle of a hammer to drive the pistons out.

CAUTION:
- **Take care not to damage the contact surface of the metal gasket.**
- **When removing the piston/connecting rod, take care not to hit the oil jet (B18C1 engine only).**
- **If the oil jet nozzle is damaged or bent, replace the oil jet assembly (B18C1 engine only, page 8-8).**

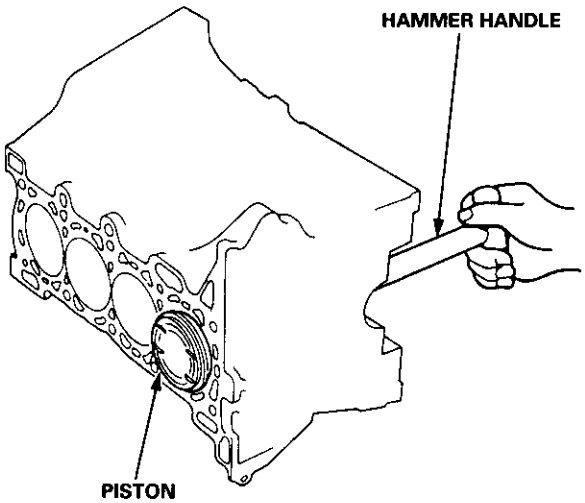

13. Reinstall the rod bearings and caps after removing each piston/connecting rod assembly.

14. Mark each piston/connecting rod assembly with its cylinder number to avoid mixup on reassembly.

NOTE: The existing number on the connecting rod does not indicate its position in the engine, it indicates the rod bore size.

Crankshaft

End Play

NOTE: End play should be inspected before removing crankshaft.

Push the crank firmly away from the dial indicator, and zero the dial against the end of the crank. Then pull the crank firmly back toward the indicator; dial reading should not exceed service limit.

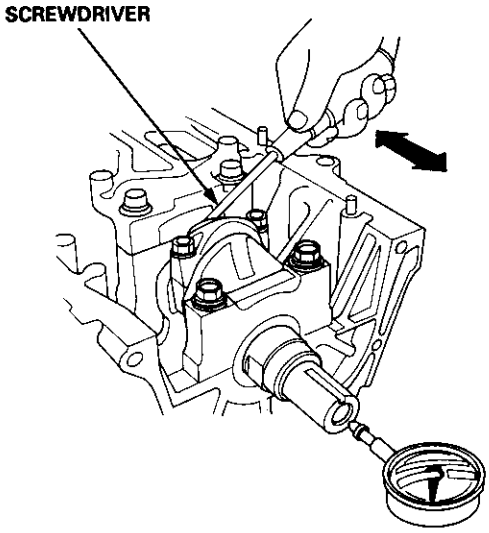

Crankshaft End Play:
Standard (New): 0.10 – 0.35 mm (0.04 – 0.014 in)
Service Limit: 0.45 mm (0.018 in)

- If end play is excessive, inspect the thrust washers and thrust surface on the crankshaft. Replace parts as necessary.

NOTE:
- Thrust washer thickness is fixed and must not be changed either by grinding or shimming.
- Thrust washers are installed with grooved sides facing outward.

Inspection

NOTE:
- Clean the crankshaft oil passages with pipe cleaners or a suitable brush.
- Check the keyway and threads.

Alignment

- Measure runout on all main journals to make sure the crank is not bent.
- The difference between measurements on each journal must not be more than the service limit.

Crankshaft Total Indicated Runout:
B18B1 engine:
Standard (New): 0.03 mm (0.001 in) max.
Service Limit: 0.05 mm (0.002 in)
B18C1 engine:
Standard (New): 0.020 mm (0.0008 in) max.
Service Limits: 0.030 mm (0.0012 in)

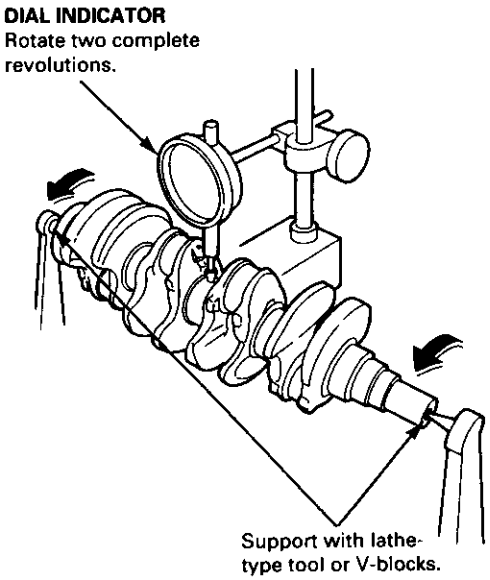

Out-of-Round and Taper

- Measure out-of-round at the middle of each rod and main journal in two places.
- The difference between measurements on each journal must not be more than the service limit.

Journal Out-of-Round:
B18B1 engine:
Standard (New): 0.005 mm (0.0002 in) max.
Service Limit: 0.010 mm (0.0004 in)
B18C1 engine:
Standard (New): 0.004 mm (0.00016 in) max.
Service Limit: 0.006 mm (0.00024 in)

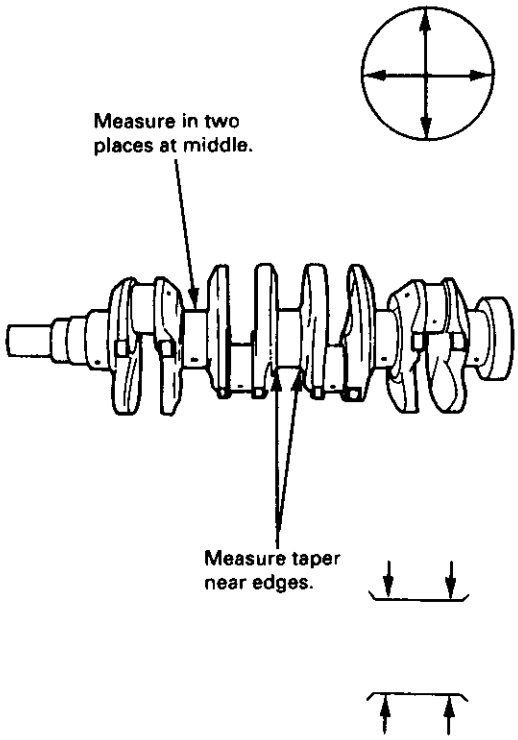

- Measure taper at the edges of each rod and main journal.
- The difference between measurements on each journal must not be more than the service limit.

Journal Taper:
B18B1 engine:
Standard (New): 0.005 mm (0.0002 in) max.
Service Limit: 0.010 mm (0.0004 in)
B18C1 engine:
Standard (New): 0.005 mm (0.0002 in) max.
Service Limit: ———

Inspection

1. Measure wear and taper in direction X and Y at three levels in each cylinder as shown.

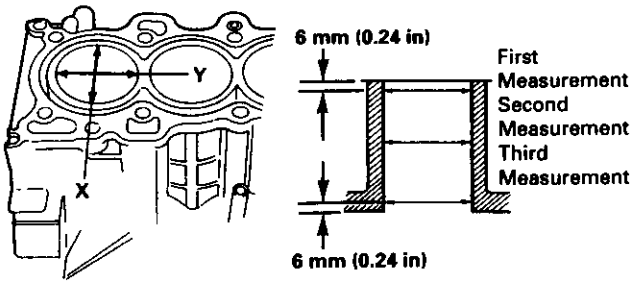

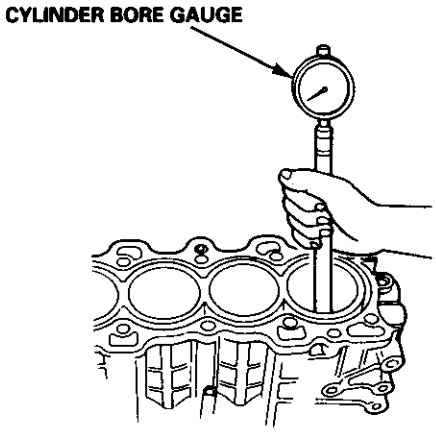

Cylinder Bore Size:
Standard (New): 81.00 – 81.02 mm (3.189 – 3.190 in)
Service Limit: 81.07 (3.192 in)
Oversize:
0.25: 81.25 – 81.27 mm (3.199 – 3.200 in)
Bore Taper:
Service Limit: (Difference between first and third measurement) 0.05 mm (0.002 in)

- If measurements in any cylinder are beyond Oversize Bore Service Limit, replace the block.
- If the block is to be rebored, refer to Piston Clearance Inspection (see page 7-15) after reboring.

NOTE: Scored or scratched cylinder bores must be honed.
Reboring Limit: 0.25 mm (0.01 in)

(cont'd)

Cylinder Block

Inspection (cont'd)

2. Check the top of the block for warpage.
   Measure along the edges and across the center as shown.

SURFACES TO BE MEASURED

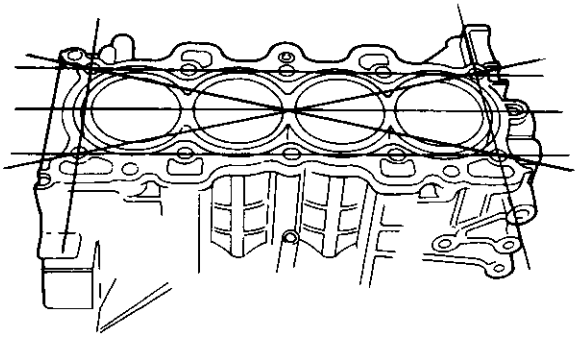

Engine Block Warpage:
B18B1 engine:
Standard (New): 0.07 mm (0.003 in) max.
Service Limit: 0.10 mm (0.004 in)
B18C1 engine:
Standard (New): 0.05 mm (0.002 in) max.
Service Limit: 0.08 mm (0.003 in)

PRECISION STRAIGHT EDGE

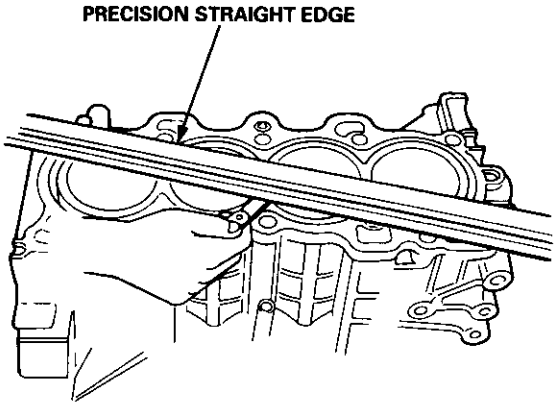

Bore Honing

1. Measure cylinder bores as shown on page 7-13.
   If the block is to be reused, hone the cylinders and remeasure the bores.

2. Hone cylinder bores with honing oil and a fine (400 grit) stone in a 60 degree cross-hatch pattern.

   NOTE:
   - Use only a rigid hone with 400 grit or finer stone such as Sunnen, Ammco, or equivalent.
   - Do not use stones that are worn or broken.

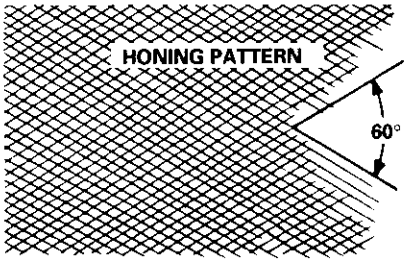

3. When honing is complete, thoroughly clean the cylinder block of all metal particles. Wash the cylinder bores with hot soapy water, then dry and oil immediately to prevent rusting.

   NOTE: Never use solvent, it will only redistribute the grit on the cylinder walls.

4. If scoring or scratches are still present in cylinder bores after honing to the service limit, rebore the engine block.

   NOTE: Some light vertical scoring and scratching is acceptable if it is not deep enough to catch your fingernail and does not run the full length of the bore.

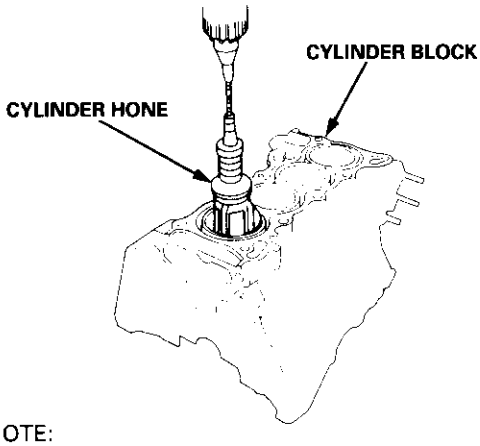

NOTE:
- After honing, clean the cylinder thoroughly with soapy water.
- Only scored or scratched cylinder bores must be honed.

Inspection

1. Check the piston for distortion or cracks.

   NOTE: If the cylinder is bored, an oversized piston must be used.

2. Measure the piston diameter at a point 15 mm (0.6 in) from the bottom of the skirt.

   Piston Diameter:
   Standard (New): 80.98 – 80.99 mm (3.188 – 3.189 in)
   Service Limit: 80.97 mm (3.188 in)

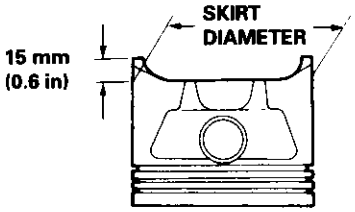

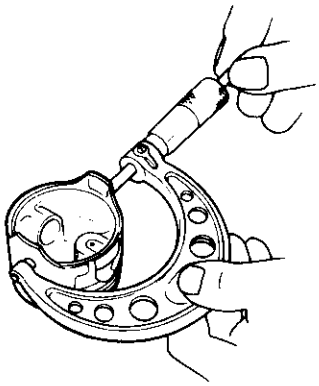

3. Calculate the difference between cylinder bore diameter on (see page 7-13) and piston diameter.

   Piston-to-Cylinder Clearance:
   Standard (New): 0.010 – 0.040 mm (0.0004 – 0.0016 in)
   Service Limit: 0.05 mm (0.002 in)

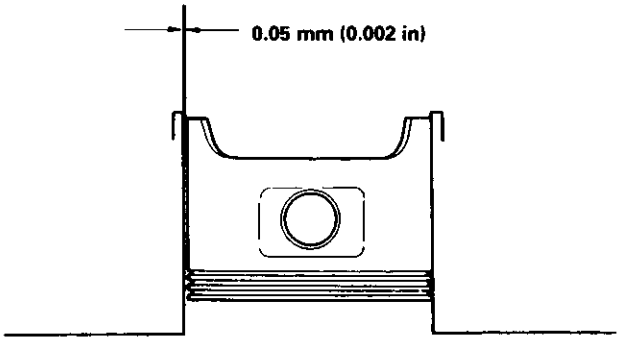

If the clearance is near or exceeds the service limit, inspect the piston and cylinder block for excessive wear.

Oversize Piston Diameter:
0.25: 81.23 – 81.24 mm (3.1980 – 3.1984 in)

Piston

Installation

Before installing the piston, apply a coat of engine oil to the ring grooves and cylinder bores.

1. If the crankshaft is already installed:
   - Remove the connecting rod caps and slip short sections of rubber hose over the threaded ends of the connecting rod bolts.
   - Install the ring compressor, check that the bearing is securely in place, then position the piston in the cylinder and tap it in using the wooden handle of a hammer.
     Stop after the ring compressor pops free and check the connecting rod-to-crank journal alignment before tapping piston into place.
   - Install the rod caps with bearings, then torque the nuts.
     B18B1 engine: 31 N·m (3.2 kgf·m, 23 lbf·ft)
     B18C1 engine: 44 N·m (4.5 kgf·m, 33 lbf·ft)
2. If the crankshaft is not installed:
   - Remove the rod caps and bearings, install the ring compressor, then position the piston in the cylinder and tap it in using the wooden handle of a hammer.
   - Position all pistons at top dead center.

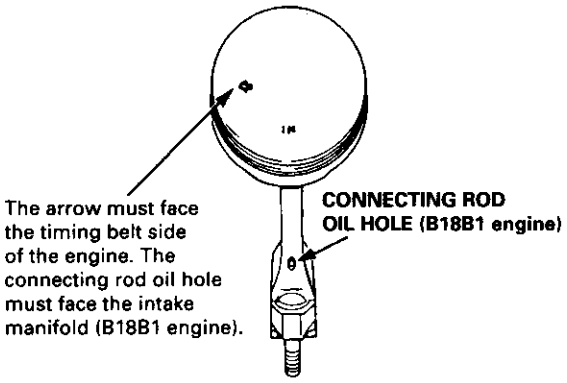

NOTE: Maintain downward force on the ring compressor to prevent rings from expanding before entering the cylinder bore.

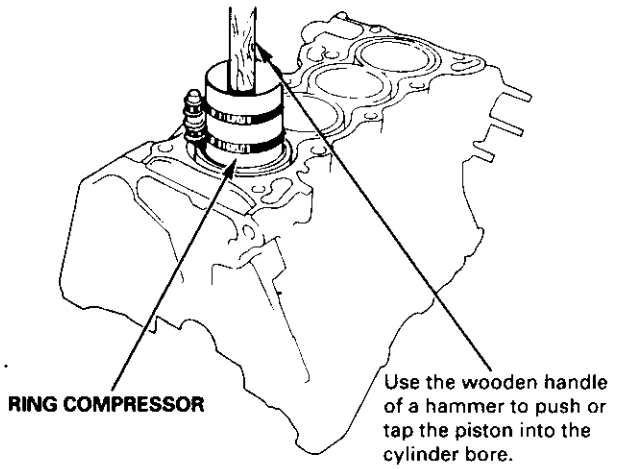

Piston Rings

Replacement

1. Using a ring expander, remove old piston rings.
2. Clean all ring grooves thoroughly.

   NOTE:
   - Use a squared-off broken ring or ring groove cleaner with blade to fit piston grooves.
   - Top ring groove is 1.0 mm (0.039 in) wide, second groove is 1.2 mm (0.047 in) wide, and oil ring groove is 2.8 mm (0.110 in) wide.
   - File down blade if necessary.

   CAUTION: Do not use a wire brush to clean the ring lands, or cut ring lands deeper with cleaning tool.

   NOTE: If the piston is to be separated from the connecting rod, do not install new rings yet.

3. Install new rings in the proper sequence and position (see page 7-18).

   NOTE: Do not use old piston rings.

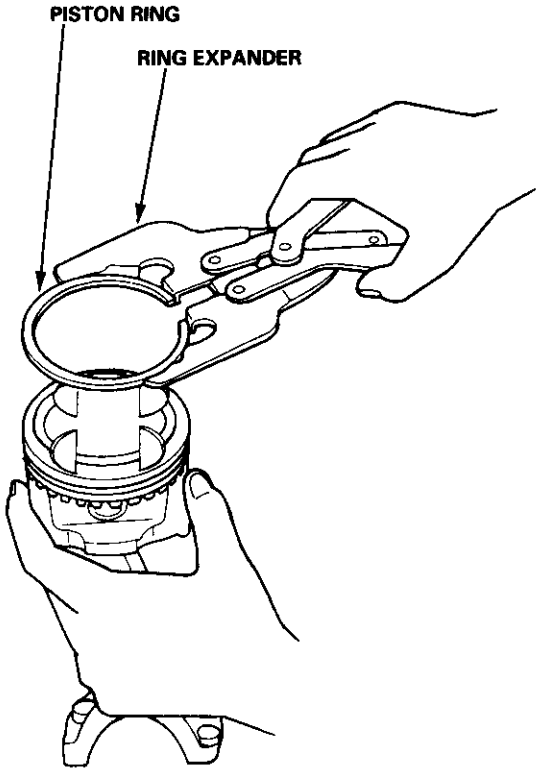

End Gap

1. Using a piston, push a new ring into the cylinder bore 15 – 20 mm (0.6 – 0.8 in) from the bottom.

2. Measure the piston ring end-gap with a feeler gauge:

   - If the gap is too small, check to see if you have the proper rings for your engine.

   - If the gap is too large, recheck the cylinder bore diameter against the wear limits on page 7-13. *If the bore is over the service limit, the cylinder* block must be rebored.

Piston Ring End-Gap:
Top Ring
Standard (New): 0.20 – 0.35 mm (0.008 – 0.014 in)*1
0.20 – 0.30 mm (0.008 – 0.012 in)*2
Service Limit: 0.60 mm (0.024 in)
Second Ring
Standard (New): 0.40 – 0.55 mm (0.016 – 0.022 in)
Service Limit: 0.70 mm (0.028 in)
Oil Ring
Standard (New): 0.20 – 0.50 mm (0.008 – 0.020 in)*1
0.20 – 0.45 mm (0.008 – 0.018 in)*2
Service Limit: 0.70 mm (0.028 in)

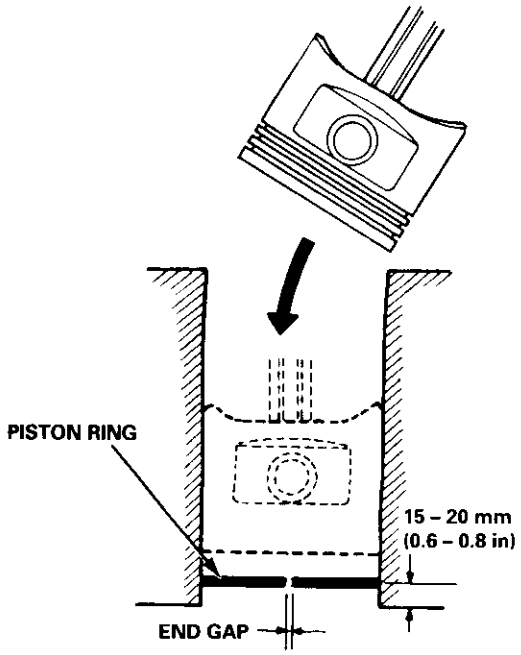

*1: RIKEN manufactured piston ring
*2: TEIKOKU PISTON RING manufactured piston ring (B18B1 engine only)

Ring-to-Groove Clearance

After installing a new set of rings, measure the ring-to-*groove clearances:*

Top Ring Clearance:
Standard (New): 0.045 – 0.070 mm (0.0018 – 0.0028 in)
Service Limit: 0.13 mm (0.005 in)

Second Ring Clearance:
Standard (New): 0.040 – 0.065 mm (0.0015 – 0.0026 in)*1
0.045 – 0.070 mm (0.0018 – 0.0028 in)*2
Service Limit: 0.13 mm (0.005 in)

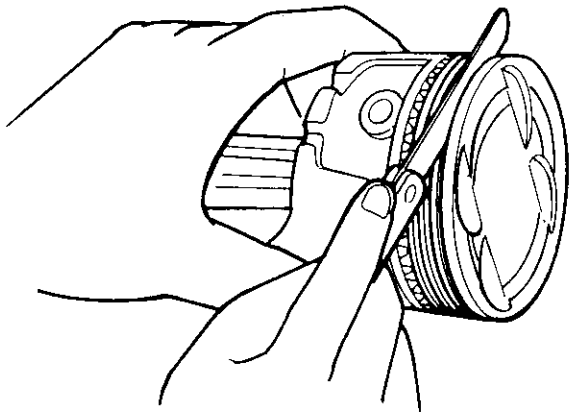

*1: RIKEN manufactured piston ring
*2: TEIKOKU PISTON RING manufactured piston ring (B18B1 engine only)

Piston Rings

Alignment

1. Install the rings as shown.

   Identify top and second rings by the chamfer on the edge. Make sure they are in their proper grooves on the piston.

   NOTE: The manufacturing marks must be facing upward.

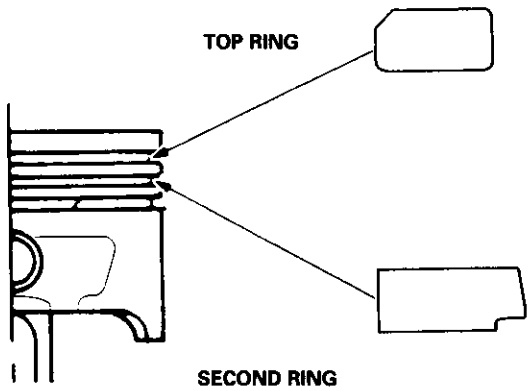

2. Rotate the rings in their grooves to make sure they do not bind.

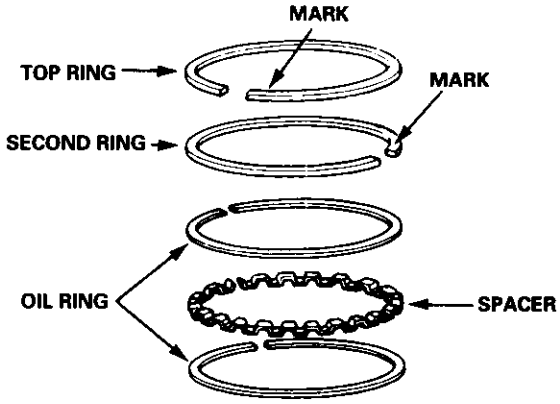

3. Position the ring end gaps as shown:

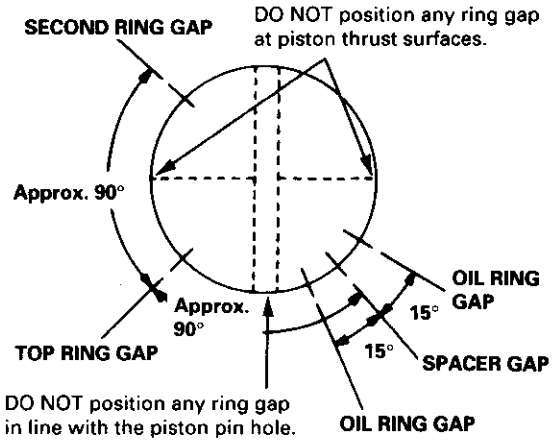

Piston Pins

Removal

1. Assemble the Piston Pin Tools as shown.

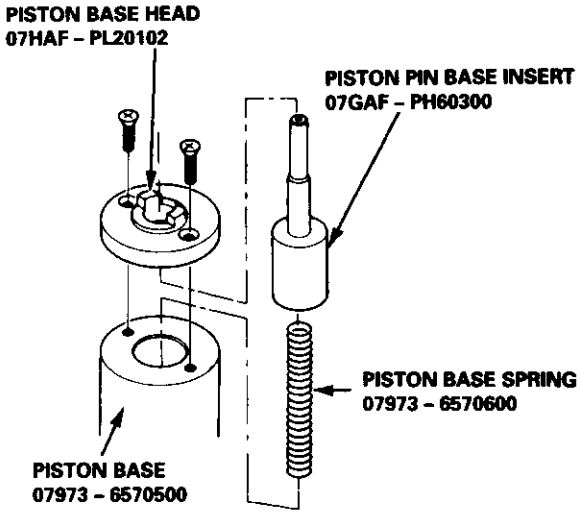

2. Adjust the length A of the piston pin driver.

A: B18B1 engine: 49.70 mm (1.957 in)
B18C1 engine: 51.70 mm (2.035 in)

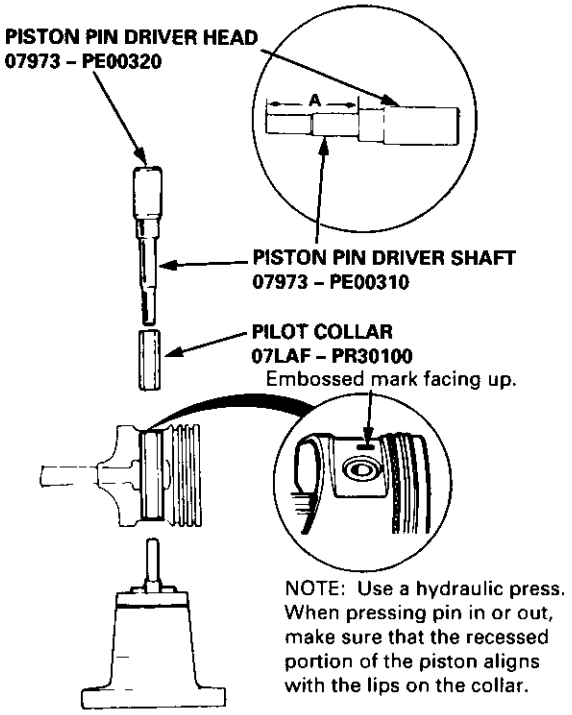

3. Place the piston on the piston base and press the pin out with a hydraulic press.

Installation (B18B1 engine)

1. Use a hydraulic press for installation.

   - When pressing the pin in or out, be sure to position the recessed flat on the piston against the lugs on the base attachment.

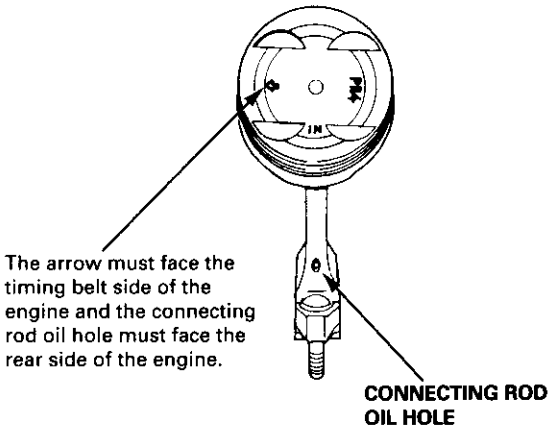

2. Adjust the length B of the piston pin driver.

B: 49.70 mm (1.957 in)

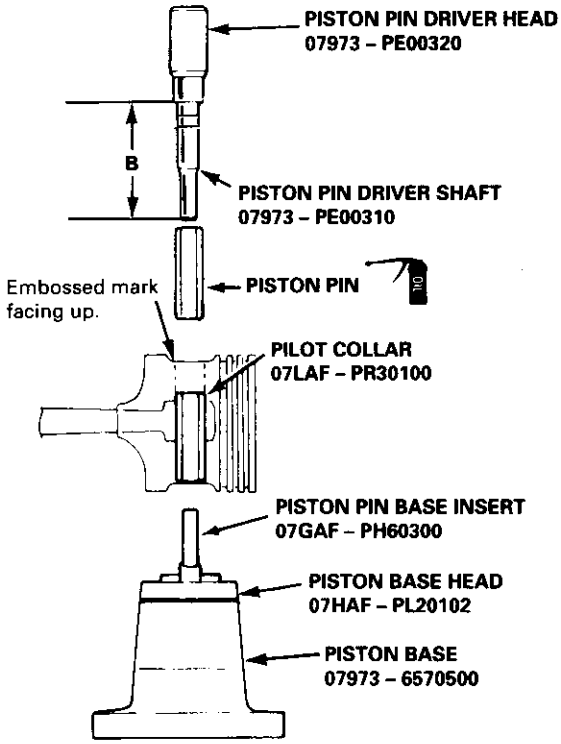

NOTE: Install the assembled piston and rod with the oil hole facing the intake manifold.

Piston Pins

Installation (B18C1 engine)

1. Use a hydraulic press for installation.

   - When pressing pin in or out, be sure you position the recessed flat on the piston against the lugs on the base attachment.

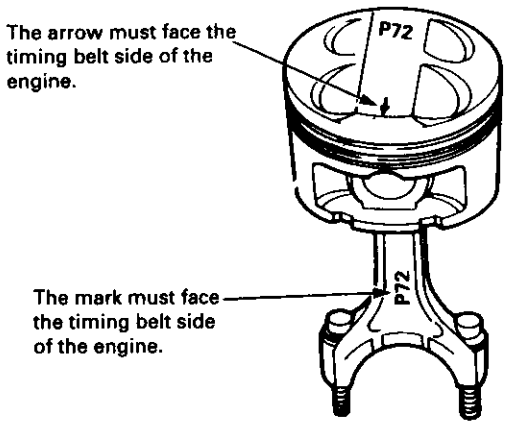

2. Adjust the length B of piston pin driver.

   B: 51.70 mm (2.035 in)

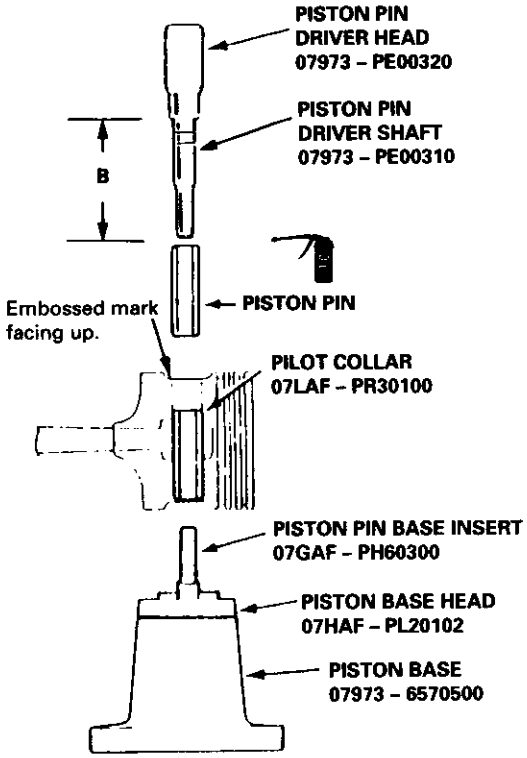

Inspection

1. Measure the diameter of the piston pin.

   Piston Pin Diameter:
   Standard (New): 20.994 - 21.000 mm (0.8265 - 0.8268 in)
   Oversize: 20.997 - 21.003 mm (0.8267 - 0.8269 in)

   NOTE: All replacement piston pins are oversize.

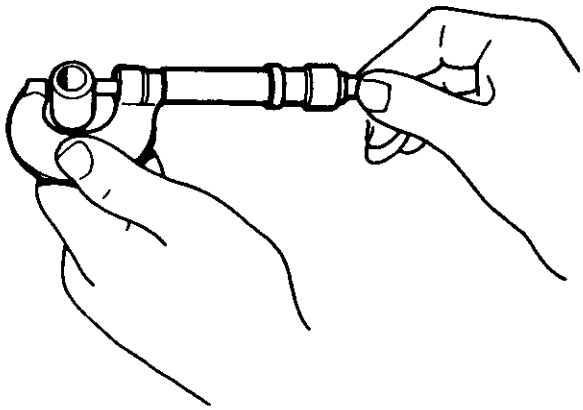

2. Zero the dial indicator to the piston pin diameter.

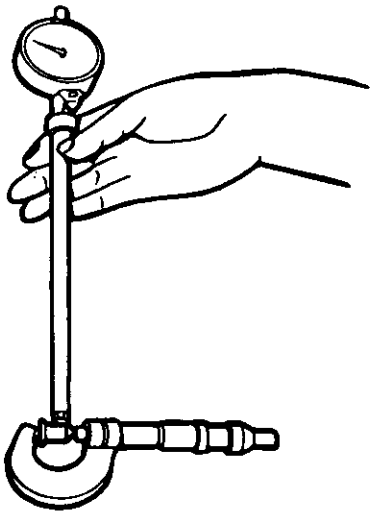

3. Measure the piston pin-to-piston clearance.

   NOTE: Check the piston for distortion or cracks.

   If the piston pin clearance is greater than 0.022 mm (0.0009 in), remeasure using an oversize piston pin.

   Piston Pin-to-Piston Clearance:
   Standard (New): 0.010 – 0.022 mm (0.0004 – 0.0009 in)

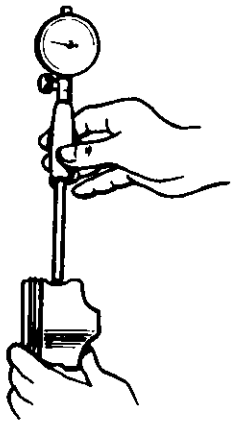

4. Check the difference between piston pin diameter and connecting rod small end diameter.

   Piston Pin-to-Connecting Rod Interference:
   Standard (New):
   B18B1 engine: 0.013 – 0.032 mm (0.0005 – 0.0013 in)
   B18C1 engine: 0.017 – 0.036 mm (0.0007 – 0.0014 in)

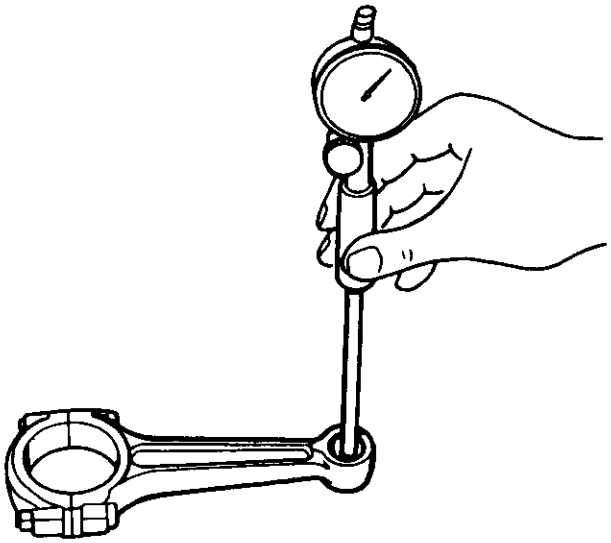

End Play

NOTE: End play should be inspected before removing the crankshaft.

Connecting Rod End Play:
Standard (New): 0.15 – 0.30 mm (0.006 – 0.012 in)
Service Limit: 0.40 mm (0.016 in)

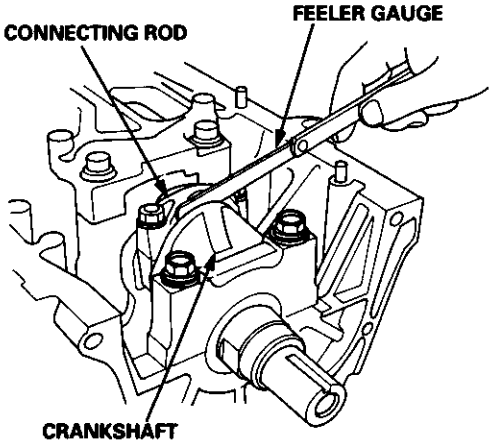

- If out-of-tolerance, install a new connecting rod.
- If still out-of-tolerance, replace the crankshaft (see pages 7-10 and 7-22)

Connecting Rods

Selection

Each rod falls into one of four tolerance ranges (from 0 to + 0.024 mm (0 to + 0.0009 in), in 0.006 mm (0.0002 in) increments) depending on the size of its big end bore. It's then stamped with a number (1, 2, 3, or 4) indicating the range.
You may find any combination of 1, 2, 3, or 4 in any engine.

Normal Bore Size: 48.0 mm (1.89 in)

NOTE:
- Reference numbers are for big end bore size and do NOT indicate the position of the rod in the engine.
- Inspect connecting rod for cracks and heat damage.

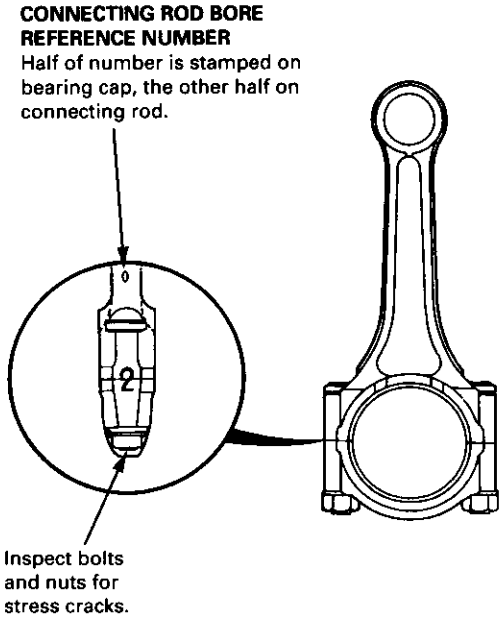

Crankshaft

Installation

Before installing the crankshaft, apply a coat of engine oil to the main bearings and rod bearings.

1. Install the thrust washers in the No. 4 journal of the cylinder block.

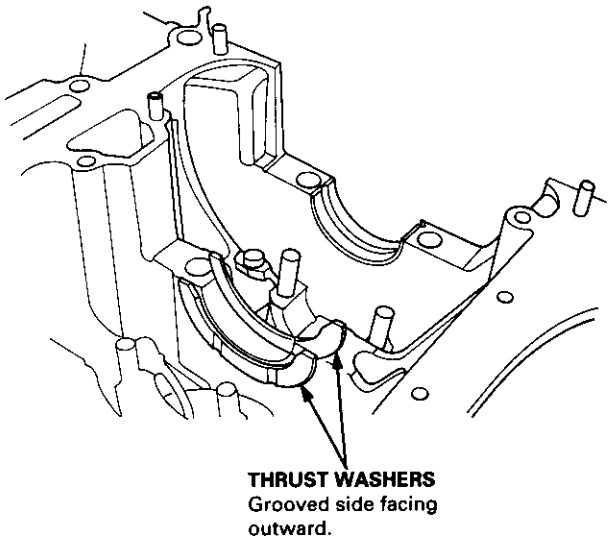

2. Insert bearing halves in the engine block and connecting rods.

3. Hold the crankshaft so rod journals for cylinders No. 2 and No. 3 are straight up.

4. Lower the crankshaft into the block, putting the rod journals into connecting rods No. 2 and No. 3. Install the rod caps and nuts finger-tight.

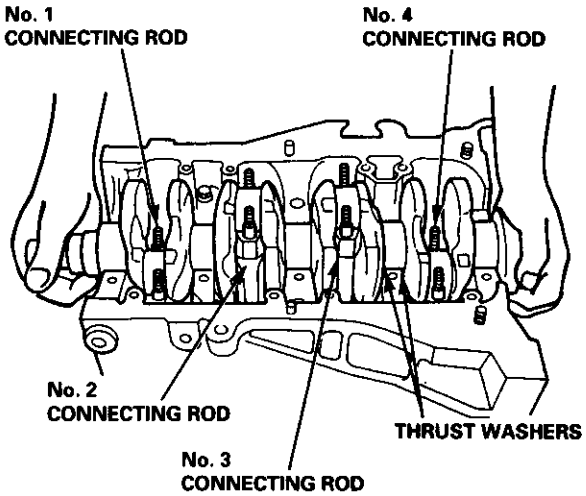

5. Rotate the crankshaft clockwise, put journals into connecting rods No. 1 and No. 4, and install the rod caps and nuts finger-tight.

   NOTE: Install caps so the bearing recess is on the same side as the recess in the rod.

6. Check rod bearing clearance with plastigage (see page 7-9), then tighten the capnuts in 2 steps.

   1st step: 20 N·m (2.0 kgf·m, 14 lbf·ft)
   2nd step:
   B18B1 engine: 31 N·m (3.2 kgf·m, 23 lbf·ft)
   B18C1 engine: 44 N·m (4.5 kgf·m, 33 lbf·ft)

   NOTE: Reference numbers on connecting rod are for big-end bore tolerance and do NOT indicate the position of piston in the engine.

7. Install the main bearings/caps and cap bridge (B18C1 engine only).

   NOTE: Coat the bolt threads with oil.

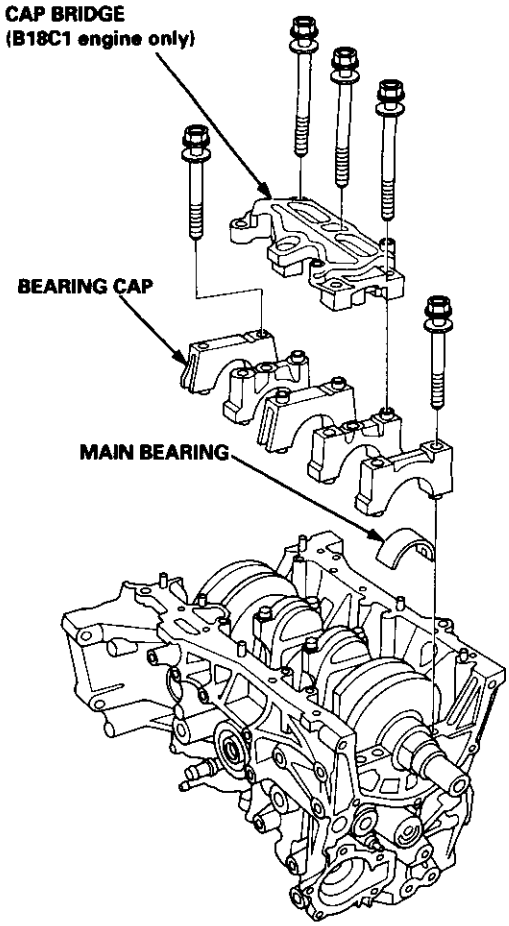

8. Check clearance with plastigage (see page 7-8), then tighten bearing cap bolts in 2 steps.

   1st step: 29 N·m (3.0 kgf·m, 22 lbf·ft)
   2nd step:
   B18B1 engine: 76 N·m (7.8 kgf·m, 56 lbf·ft)
   B18C1 engine:
   No. 1, 5 cap bolts: 73 N·m (7.4 kgf·m, 56 lbf·ft)
   No. 2, 3, 4 cap bolts: 64 N·m (6.5 kgf·m, 49 lbf·ft)

BEARING CAP BOLTS TORQUE SEQUENCE

B18B1 engine:

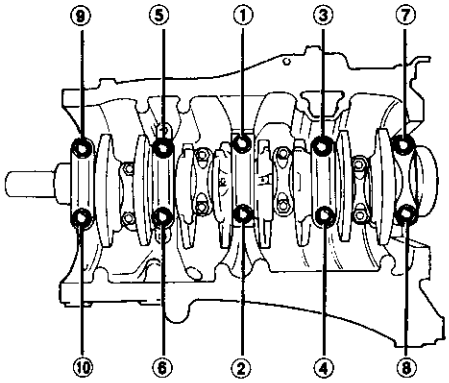

B18C1 engine:

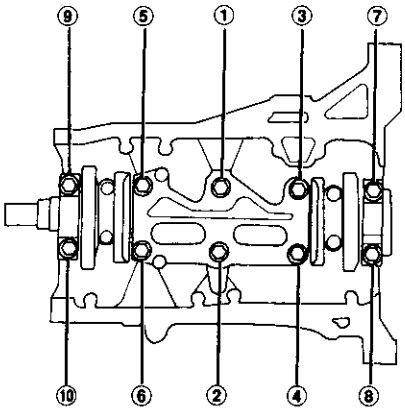

CAUTION: Whenever any crankshaft or connecting rod bearing is replaced, it is necessary after reassembly to run the engine at idling speed until it reaches normal operating temperature, then continue to run it for approximately 15 minutes.

(cont'd)

Installation (cont'd)

9. Apply non-hardening liquid gasket to the block mating surface of the right side cover, and install it on the cylinder block.

   NOTE:
   - Use liquid gasket, Part No. 08718 – 0001.
   - Check that the mating surfaces are clean and dry before applying liquid gasket.
   - Apply liquid gasket as an even bead, centered between the edges of the mating surface.
   - To prevent leakage of oil, apply liquid gasket to the inner threads of the bolt holes.
   - Do not install the parts if 20 minutes or more have elapsed since applying the liquid gasket. Instead, reapply liquid gasket after removing the old residue.
   - After assembly, wait at least 20 minutes before filling the engine with oil.

RIGHT SIDE COVER:

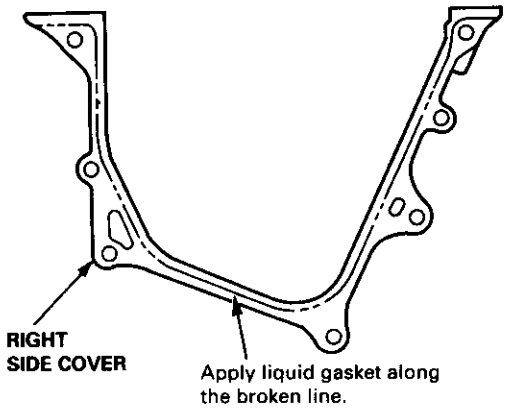

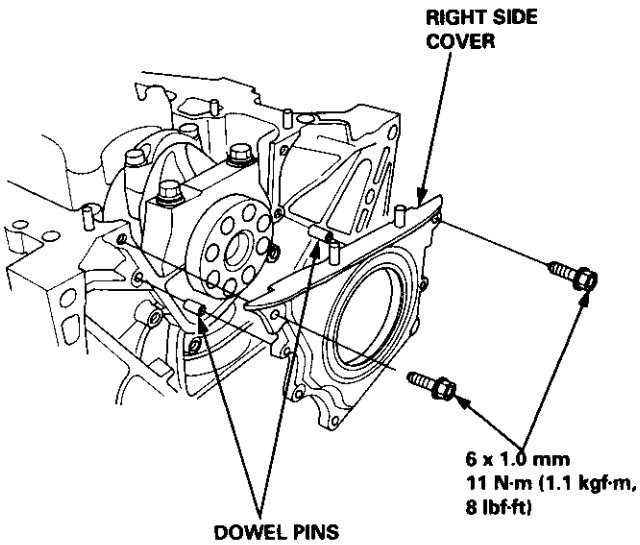

10. Apply non-hardening liquid gasket to the block mating surface of the oil pump, and install it on the cylinder block.

OIL PUMP:

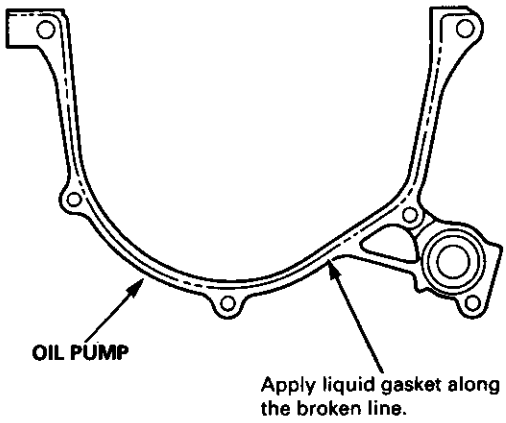

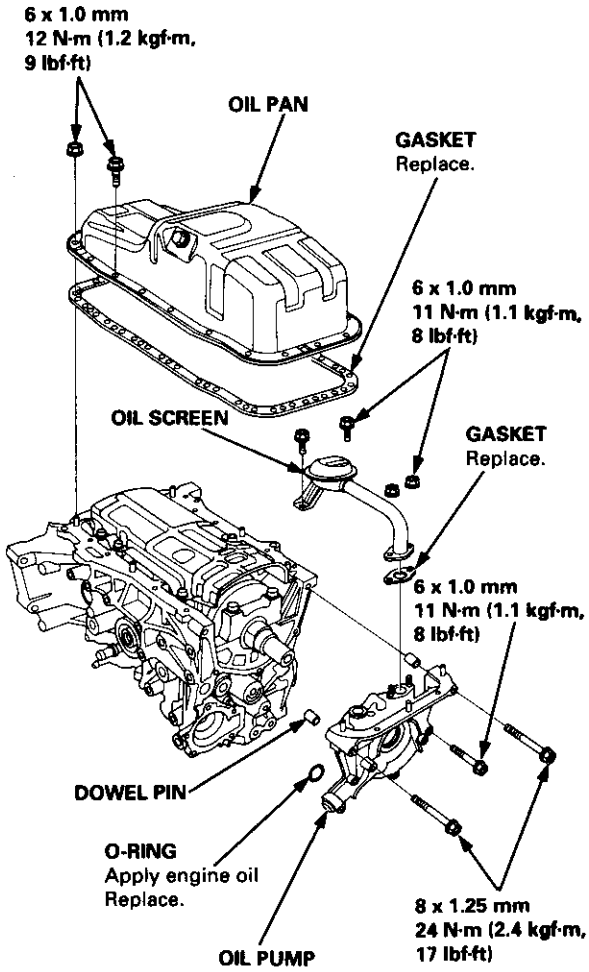

11. Install the oil screen.

12. Install the oil pan.

    NOTE: Clean the oil pan gasket mating surfaces.

13. Tighten the bolts as shown below.

    Torque: 12 N·m (1.2 kgf·m, 9 lbf·ft)

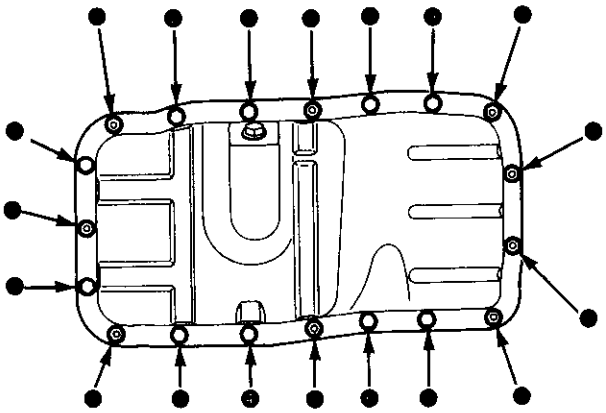

NOTE: Tighten the bolts and nuts in two steps and torque the bolts in a crisscross pattern.

Installation

The seal surface on the block should be dry. Apply a light coat of oil to the crankshaft and to the lip of the seal.

1. Drive in flywheel end seal against right side cover.

   NOTE: Drive the end seal in squarely.

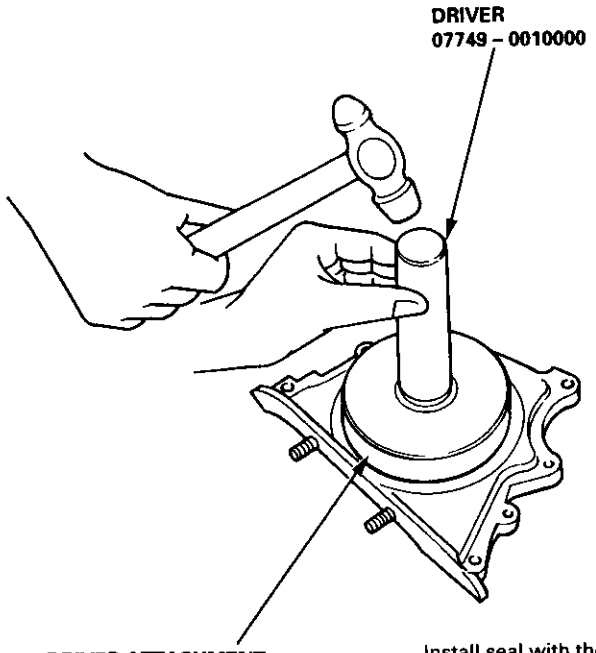

Install seal with the part number side facing out.

2. Confirm that clearance is equal all the way around with a feeler gauge.

   Clearance: 0.5 – 0.8 mm (0.02 – 0.03 in)

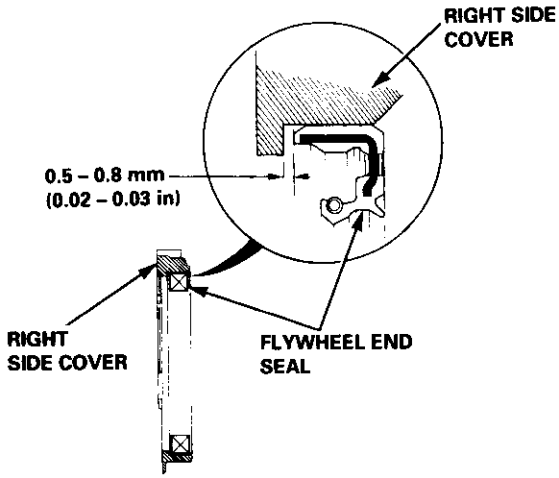

NOTE: Refer to right column and 8-10 for installation of the oil pump side oil seal.

Oil Seal

Installation (engine removal not required)

The seal surface on the block should be dry. Apply a light coat of grease to the crankshaft and to the lip of seal.

1. Using the special tool, drive in the timing pulley-end seal until the driver bottoms against the oil pump.
   When the seal is in place, clean any excess grease off the crankshaft and check that the oil seal lip is not distorted.

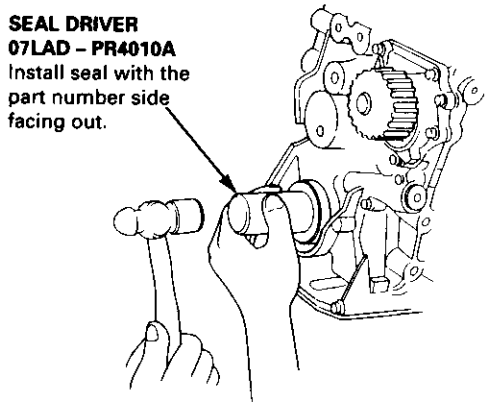

2. Using the special tool, drive in the flywheel-end seal until the driver bottoms against block.

   NOTE: Align the hole in the driver attachment with the pin on the crankshaft.

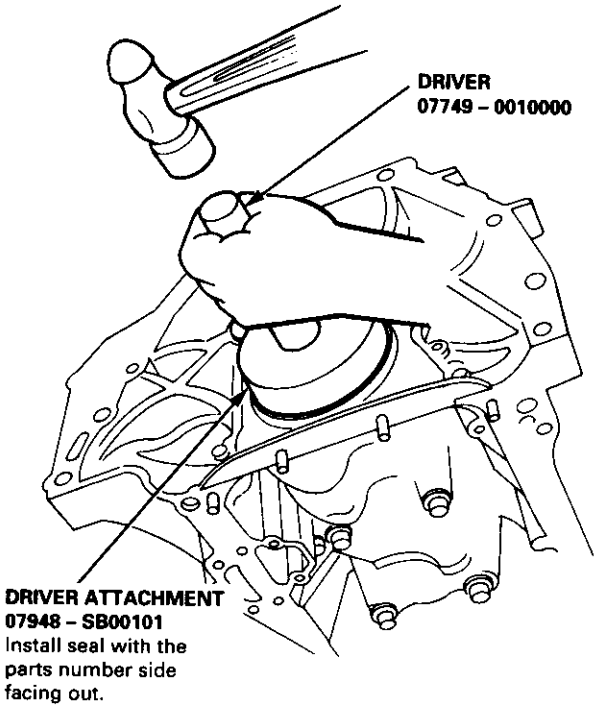

Engine Lubrication

Special Tools 8-2
Illustrated Index 8-3
Engine Oil
  Inspection 8-5
  Replacement 8-5
Oil Filter
  Replacement 8-6
Oil Pressure
  Testing 8-8
Oil Jet
  Inspection (B18C1 engine only) 8-8
Oil Pump
  Overhaul 8-9
  Removal/Inspection/Installation 8-10

Special Tools

Ref. No.	Tool Number	Description	Qty	Page Reference
①	07LAD–PR4010A	Seal Driver	1	8-11
②	07912–6110001	Oil Filter Wrench	1	8-7

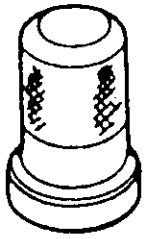

①

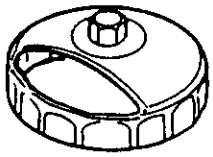

②

CAUTION: Do not overtighten the drain plug.

B18B1 engine:

NOTE:
- Use new O-rings when reassembling.
- Apply oil to O-rings before installation.
- Use liquid gasket, Part No. 08718—0001.
- Clean the oil pan gasket mating surfaces before installing it.

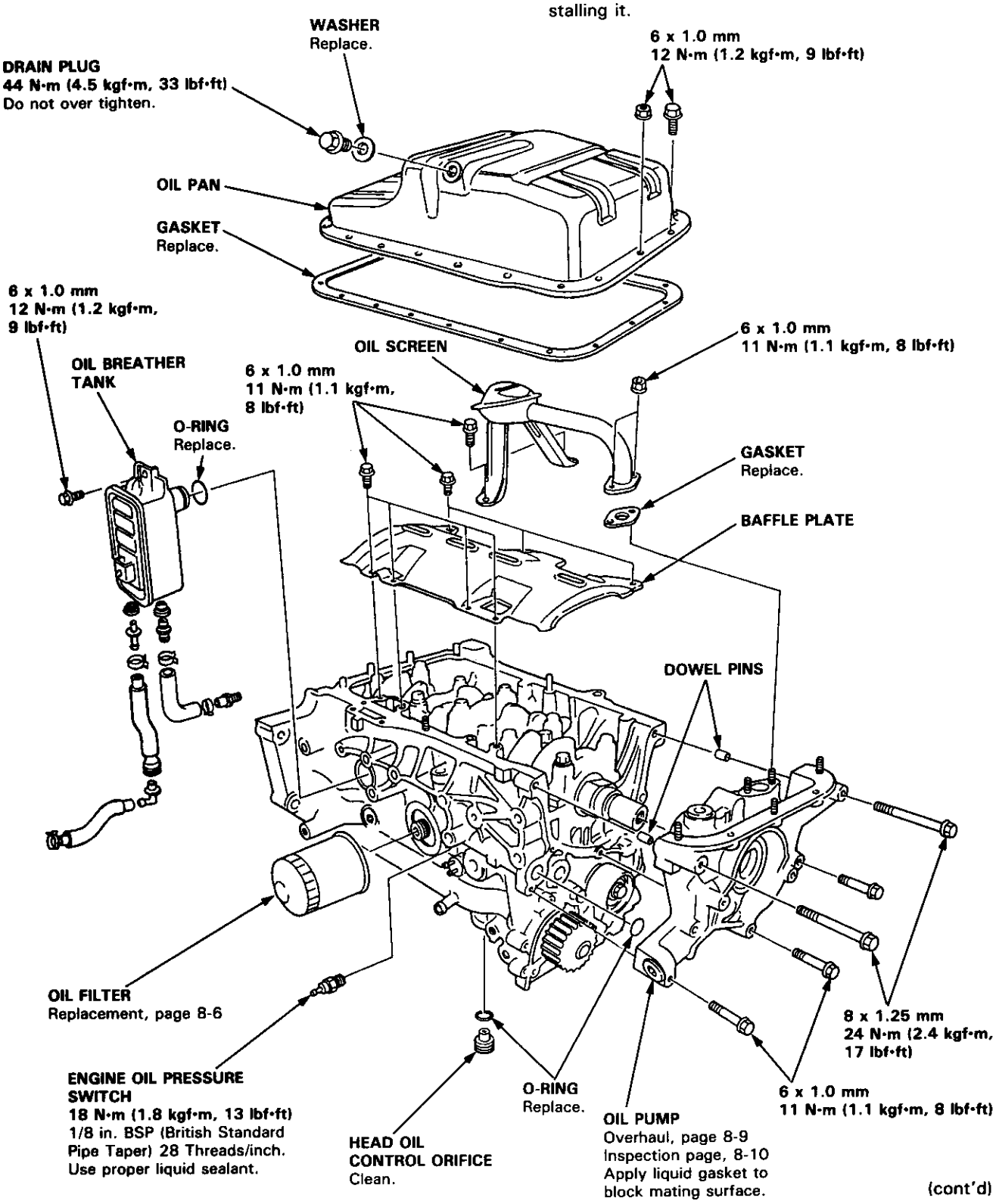

(cont'd)

CAUTION: Do not overtighten the drain plug.

B18C1 engine:

NOTE:
- Use new O-rings when reassembling.
- Apply oil to O-rings before installation.
- Use liquid gasket, Part No. 08718–0001.
- Clean the oil pan gasket mating surfaces before installing it.

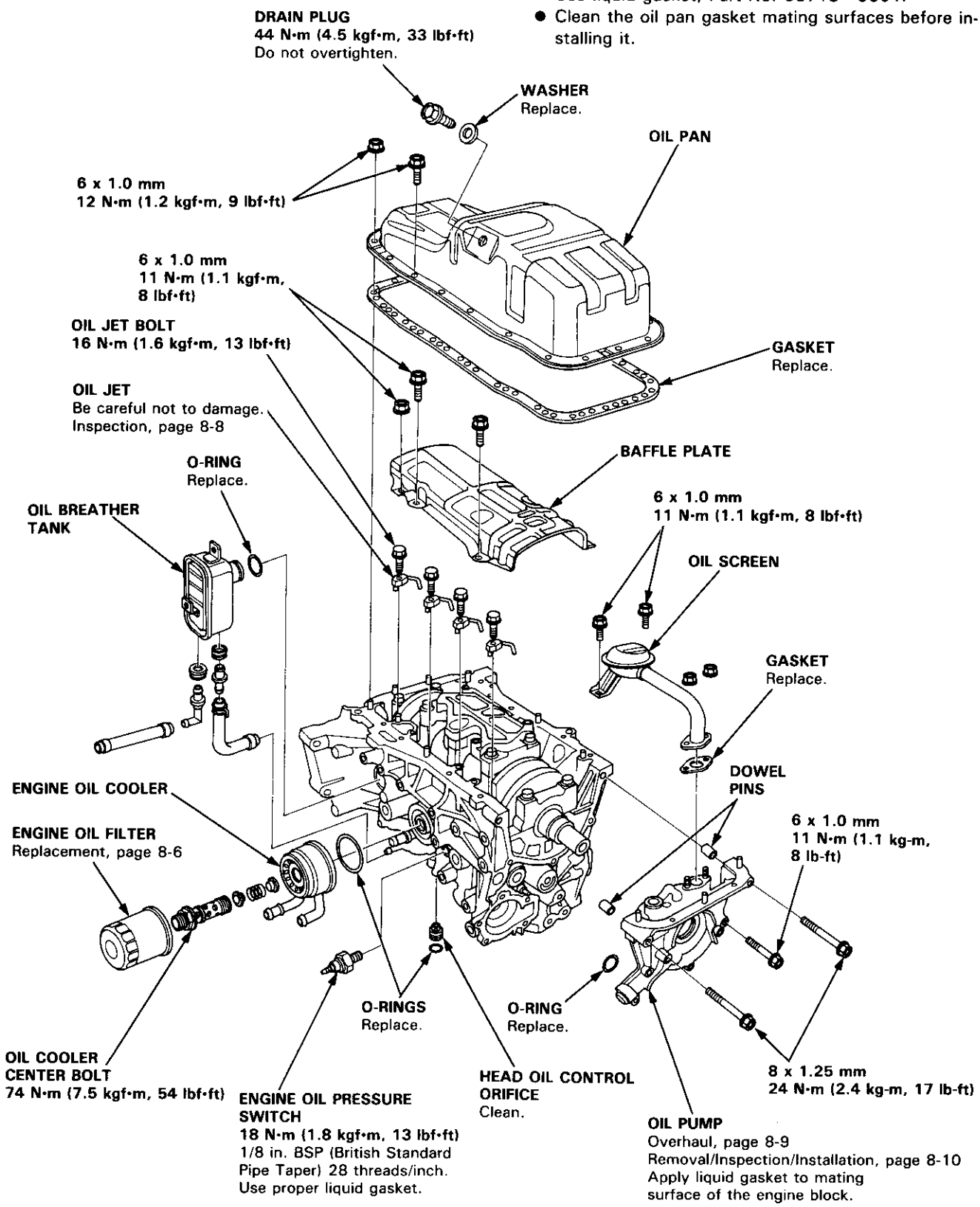

Engine Oil

Inspection

1. Check engine oil with the engine off and the car parked on level ground.

2. Make certain that the oil level indicated on the dipstick is between the upper and lower marks.

3. If the level has dropped close to the lower mark, add oil until it reaches the upper mark.

   CAUTION: Insert the dipstick carefully to avoid bending it.

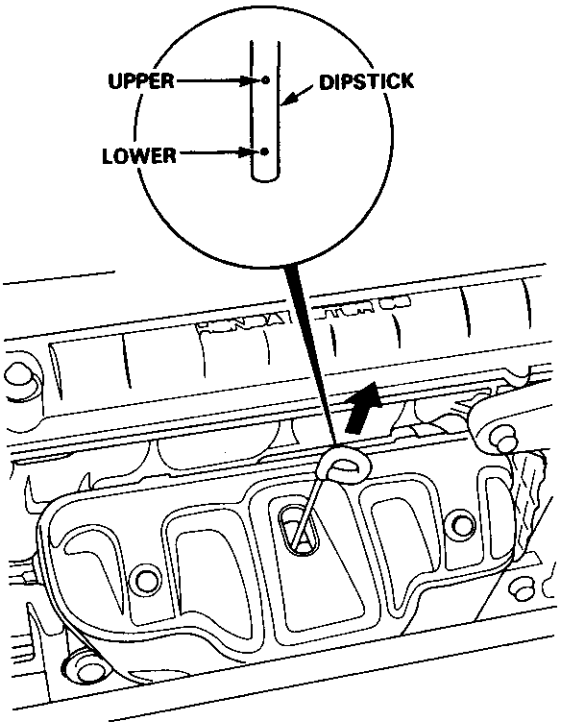

Replacement

CAUTION: Remove the drain plug carefully while the engine is hot; the hot oil may cause scalding.

1. Warm up the engine.

2. Drain the engine oil.

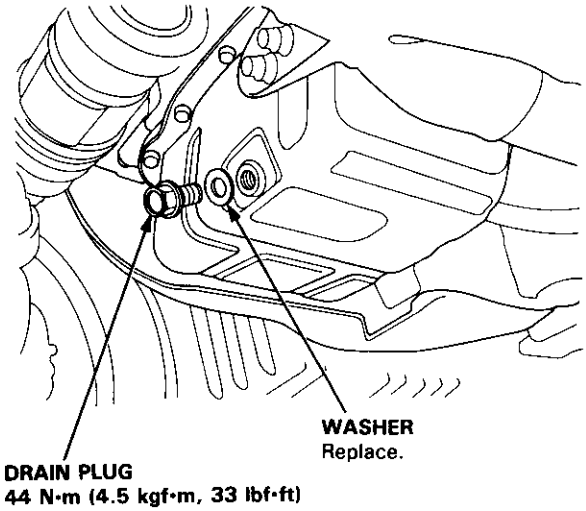

3. Reinstall the drain plug with a new washer, and refill with the recommended oil.

   CAUTION: Do not overtighten the drain plug.

Requirement	API Service Grade: Use "Energy Conserving II" SG or SH grade oil. SAE 5W–30 preferred.
Capacity	B18B1 engine: 3.5 ℓ (3.7 US qt, 3.1 Imp qt) at oil change. 3.8 ℓ (4.0 US qt, 3.3 Imp qt) at change, including filter. 4.6 ℓ (4.9 US qt, 4.0 Imp qt) after engine overhaul. B18C1 engine: 3.7 ℓ (3.9 US qt, 3.3 Imp qt) at oil change. 4.0 ℓ (4.2 US qt, 3.5 Imp qt) at change, including filter. 4.8 ℓ (5.1 US qt, 4.2 Imp qt) after engine overhaul.
Change	Every 7,500 miles (12,000 km) or 6 months

(cont'd)

Engine Oil

Replacement (cont'd)

API CERTIFICATION SEAL

The numbers in the middle of the API Service label tell you the oil's SAE viscosity or weight. Select the oil for your car according to this chart:

Ambient Temperature

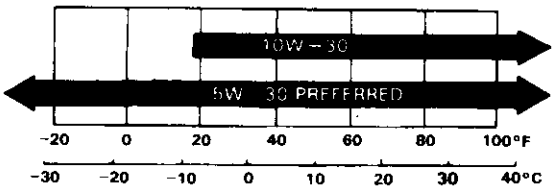

An oil with a viscosity of 5W-30 is preferred for improved fuel economy and year-round protection in the car. You may use a 10W-30 oil if the climate in your area is limited to the temperature range shown on the chart.

4. Fill the engine with oil up to the specified level, run the engine for more than three minutes, then check for oil leakage and oil level.

Oil Filter

Replacement

CAUTION: After the engine has been run, the exhaust pipes will be hot; be careful when working around the exhaust manifold.

1. Remove the oil filter with the special oil filter wrench.

2. Inspect the threads and rubber seal on the new filter. Wipe off seat on engine block, then apply a light coat of oil to the filter rubber seal.

   NOTE: Use only filters with a built-in bypass system.

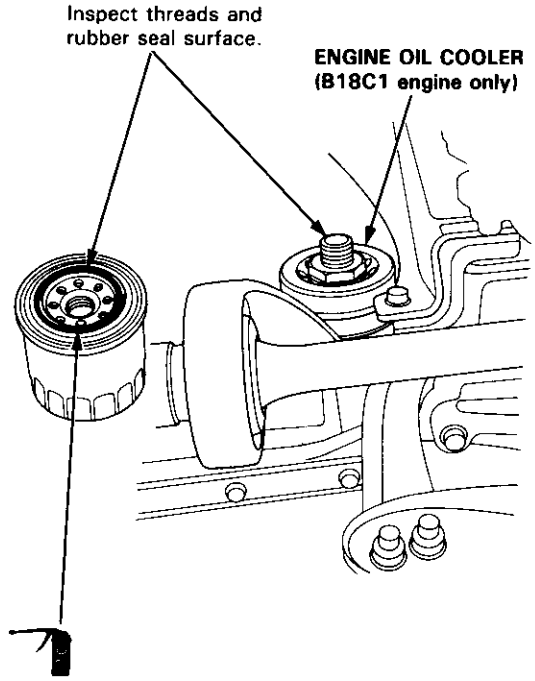

3. Install the oil filter by hand.

4. After the rubber seal seats, tighten the oil filter clockwise with the special tool.

   Tighten: 7/8 turn clockwise.
   Tightening torque: 22 N·m (2.2 kgf·m, 16 lbf·ft)

   CAUTION: Installation other than the above procedure could result in serious engine damage due to oil leakage.

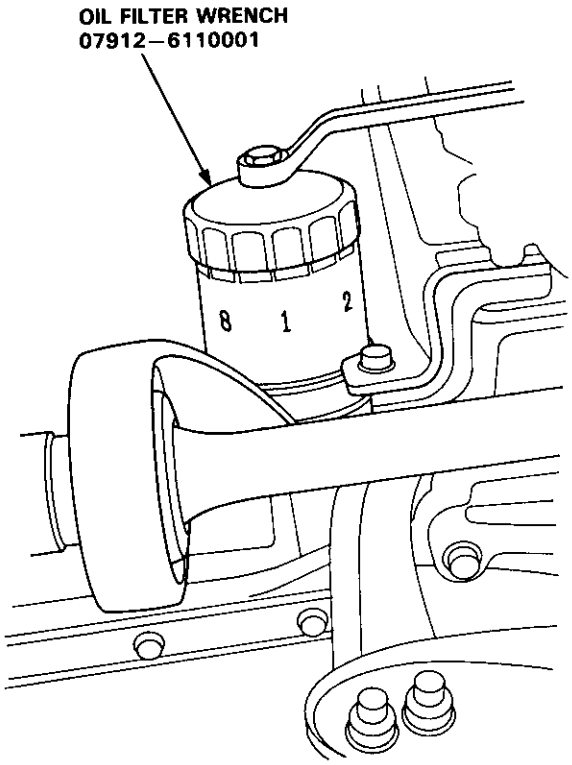

Eight numbers (1 to 8) are printed on the surface of the filter.

The following explains the procedure for tightening filters using these numbers.

1) Make a mark on the cylinder block under the number that shows at the bottom of the filter when the rubber seal is seated.

2) Tighten the filter by turning it clockwise seven numbers from the marked point. For example, if a mark is made under the number 2 when the rubber seal is seated, the filter should be tightened until the number 1 comes up to the marked point.

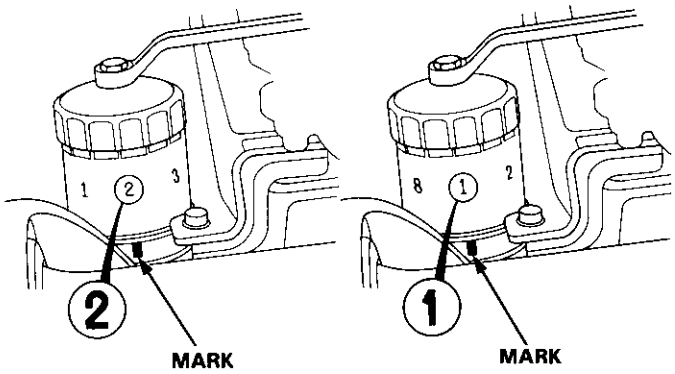

Number when rubber seal is seated.

Number after tightening.

Number when rubber seal is seated	1	2	3	4	5	6	7	8
Number after tightening	8	1	2	3	4	5	6	7

5. After installation, fill the engine with oil up to the specified level, run the engine for more than 3 minutes, then check for oil leakage and oil level.

Oil Pressure

Testing

If the oil pressure warning light stays on with the engine running, check the engine oil level. If the oil level is correct:

1. Connect a tachometer.
2. Remove the oil pressure switch and install an oil pressure gauge.
3. Start the engine. Shut it off immediately if the gauge registers no oil pressure. Repair the problem before continuing.
4. Allow the engine to reach operating temperature (fan comes on at least twice). The pressure should be:

   Engine Oil Pressure:

   At Idle: 70 kPa (0.7 kgf/cm², 10 psi) minimum
   At 3,000 rpm: 340 kPa (3.5 kgf/cm², 50 psi) minimum

   - If oil pressure is within specifications, replace the engine oil pressure switch and recheck.
   - If oil pressure is NOT within specifications, inspect the oil pump (see page 8-10).

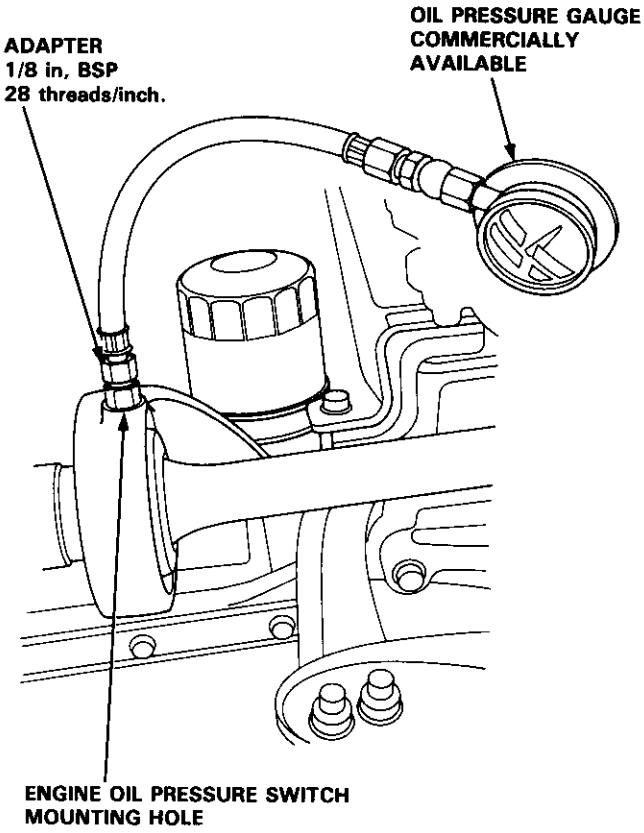

Oil Jet

Inspection (B18C1 engine only)

1. Remove the oil jet (see page 8-4) and inspect it as follows.

   - Make sure that a 1.1 mm (0.04 in) diameter drill will go through the nozzle hole (1.2 mm (0.05 in) diameter).
   - Insert the other end of the same 1.1 mm (0.04 in) drill into the oil intake (1.2 mm (0.05 in) diameter).
     Make sure the check ball moves smoothly and has a stroke of approximately 4.0 mm (0.16 in).
   - Check the oil jet operation with an air nozzle. It should take at least 200 kPa (2.0 kgf/cm², 28 psi) to unseat the check ball.

   NOTE: Replace the oil jet assembly if the nozzle is damaged or bent.

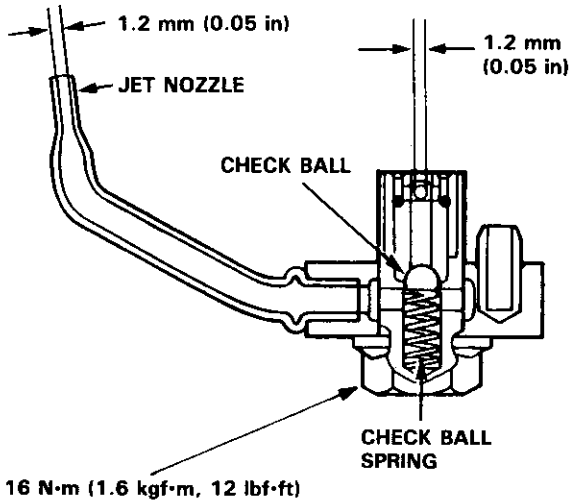

2. Mounting torque is critical. Be very precise when installing.

   Torque: 16 N·m (1.6 kgf·m, 12 lbf·ft)

Oil Pump

Overhaul

NOTE:
- Use new O-rings when reassembling.
- Apply oil to O-rings before installation.
- Use liquid gasket, Part No. 08718—0001.
- After reassembly, check that the rotors move without binding.

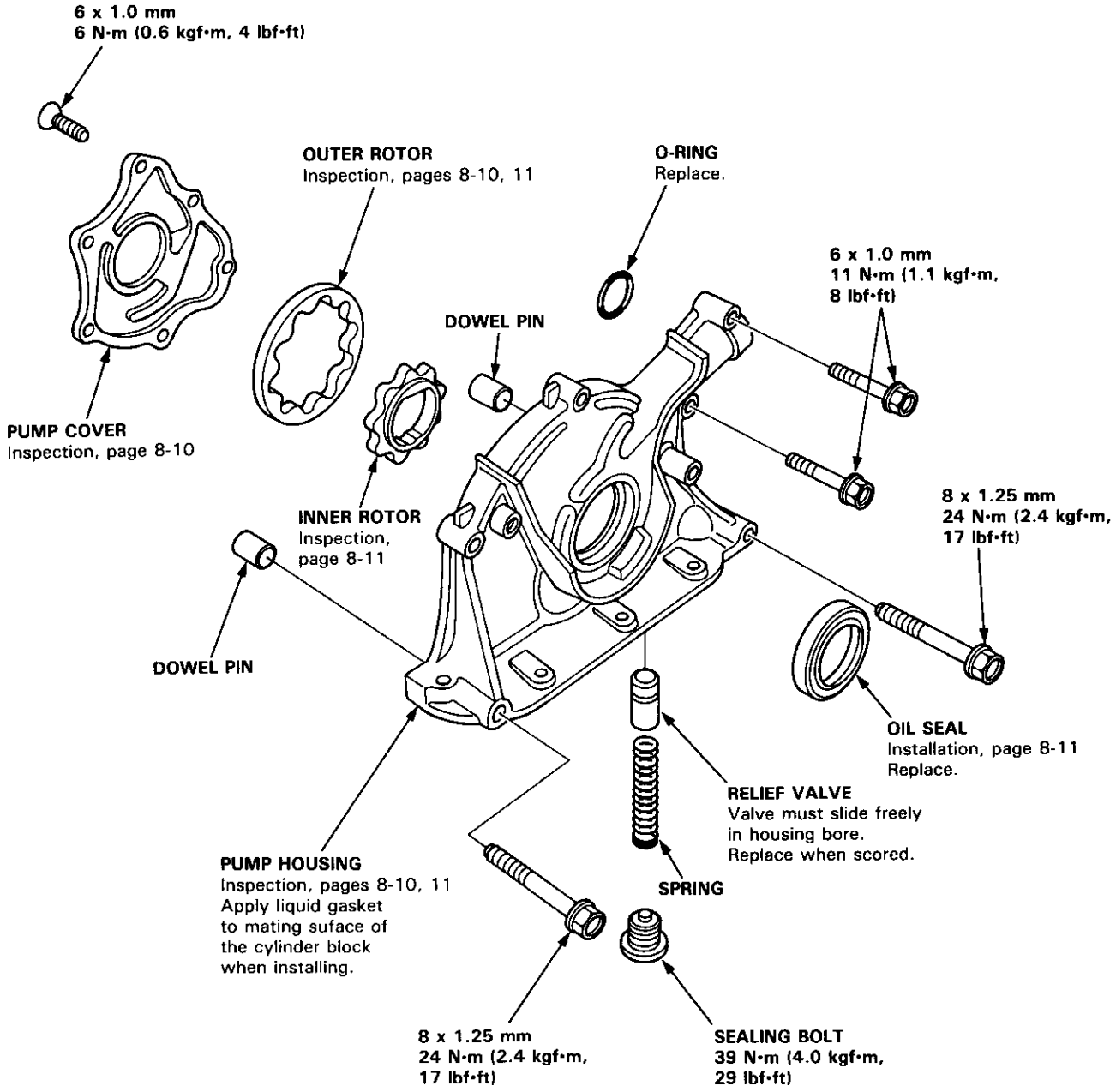

Oil Pump

Removal/Inspection/Installation

1. Drain the engine oil.
2. Turn the crankshaft and align the white groove on the crankshaft pulley with the pointer on the lower cover.
3. Remove the cylinder head cover and middle cover.
4. Remove the power steering pump belt, air conditioner belt and the alternator belt.
5. Remove the crankshaft pulley and remove the lower cover.
6. Remove the timing belt.
7. Remove the drive pulley.
8. Remove the oil pan and oil screen.
9. Remove the oil pump.

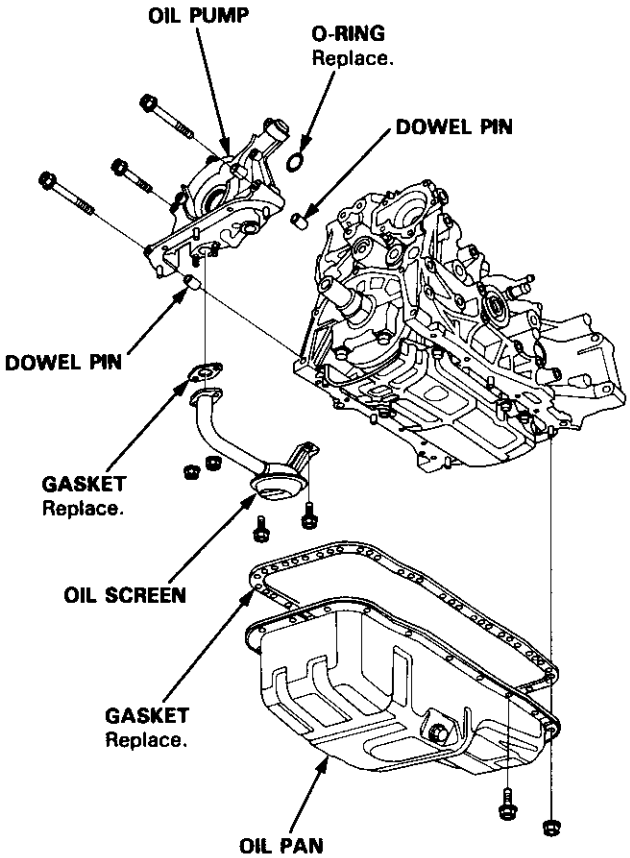

10. Remove the screws from the pump housing, then separate the housing and cover.
11. Check the inner-to outer rotor radial clearance on the pump rotor.

Inner Rotor-to-Outer Rotor Radial Clearance
Standard (New): 0.04–0.16 mm (0.002–0.006 in)
Service Limit: 0.20 mm (0.008 in)

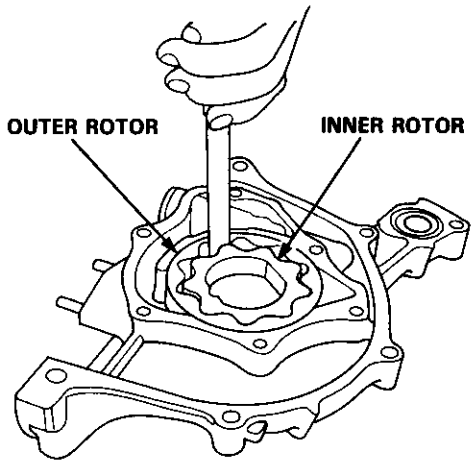

12. Check the housing-to-rotor axial clearance on the pump rotor.

Housing-to-Rotor Axial Clearance
Standard (New): 0.02–0.07 mm (0.001–0.003 in)
Service Limit: 0.15 mm (0.006 in)

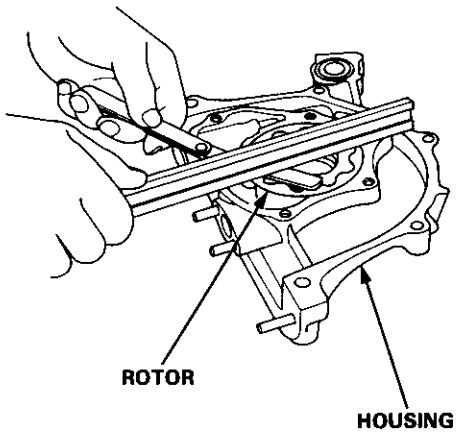

13. Check the housing-to-outer rotor radial clearance.

Housing-to-Outer Rotor Radial Clearance:
Standard (New): 0.10–0.19 mm (0.004–0.007 in)
Service Limit: 0.20 mm (0.008 in)

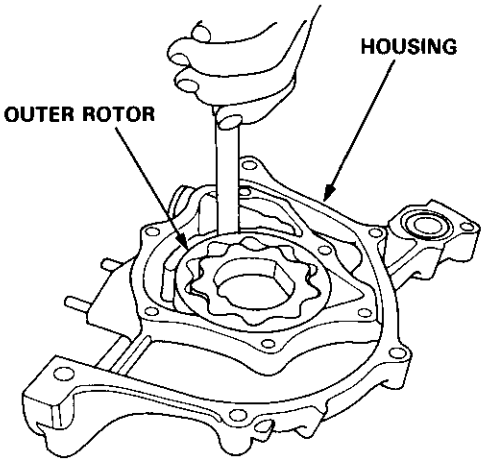

14. Inspect both rotors and pump housing for scoring or other damage. Replace parts if necessary.

15. Remove the old oil seal from the oil pump.

16. Gently tap in the new oil seal until the special tool bottoms on the pump.

NOTE: The oil seal alone can be replaced without removing the oil pump.

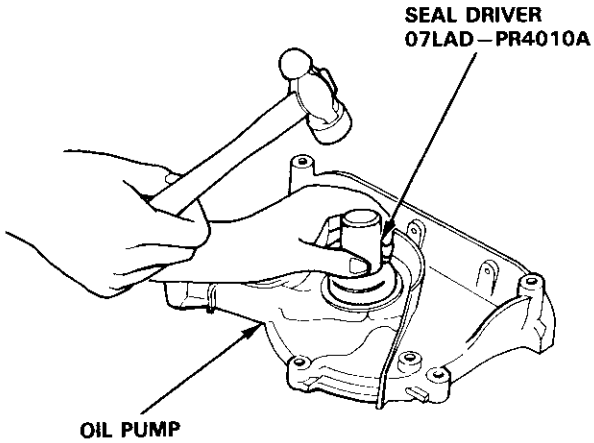

17. Reassemble the oil pump, applying thread lock to the pump housing screws.

18. Check that the oil pump turns freely.

19. Apply a light coat of oil to the seal lip.

20. Install the two dowel pins and new O-ring on the oil pump.

21. Apply liquid gasket to the cylinder block mating surface of the oil pump.

NOTE:
- Use liquid gasket, Part No. 08718–0001.
- Check that the mating surfaces are clean and dry before applying liquid gasket.
- Apply liquid gasket evenly, in a narrow bead centered on the mating surface.
- To prevent leakage of oil, apply liquid gasket to the inner threads of the bolt holes.

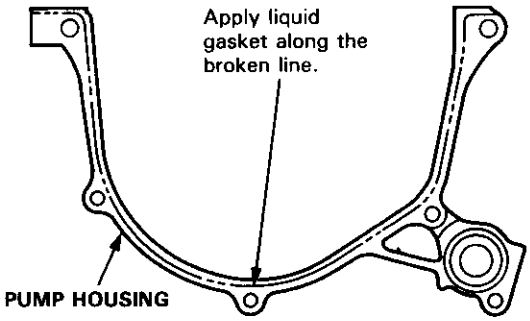

- Do not install the parts if 20 minutes or more have elapsed since applying liquid gasket. Instead, reapply liquid gasket after removing the old residue.
- After assembly, wait at least 20 minutes before filling the engine with oil.

(cont'd)

Oil Pump

Removal/Inspection/Installation (cont'd)

22. Install the oil pump on the cylinder block.
    - Apply grease to the lip of the oil pump seal. Then, install the oil pump onto the crankshaft. When the pump is in place, clean any excess grease off the crankshaft and check that the oil seal lip is not distorted.

23. Install the oil screen.

24. Install the oil pan.

    NOTE: Clean the oil pan gasket mating surfaces.

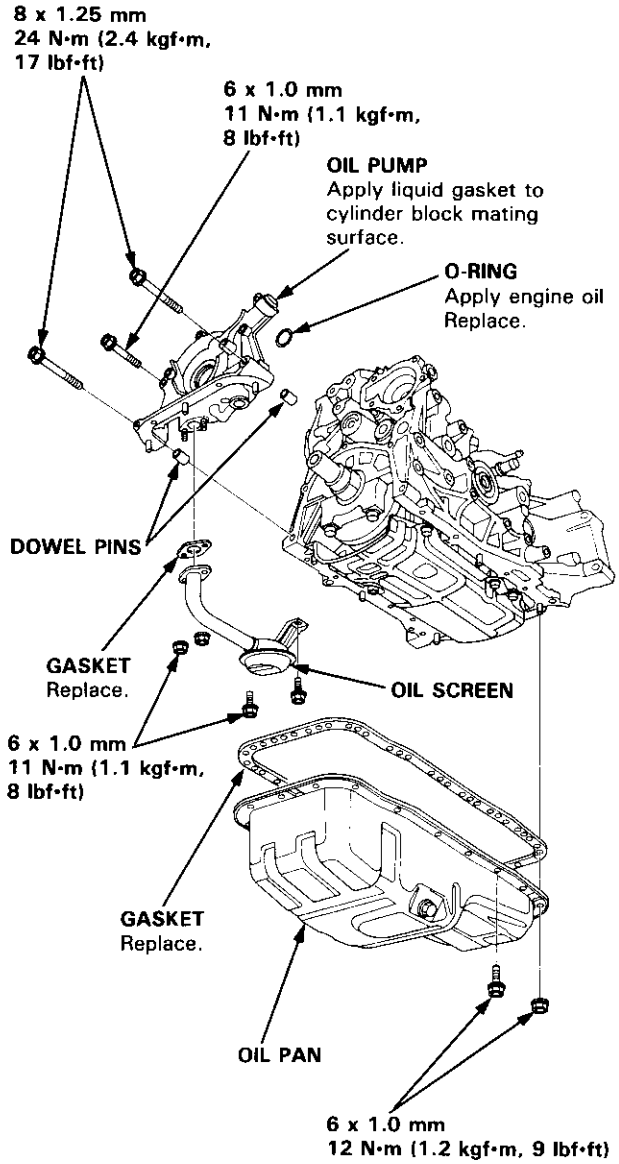

Intake Manifold/Exhaust System

Intake Manifold
Replacement 9-2
Exhaust Manifold
Replacement 9-4
Exhaust Pipe and Muffler
Replacement 9-5

Intake Manifold

Replacement

NOTE: Use new O-rings and gaskets when reassembling.

CAUTION: Check for folds or scratches on the surface of the gasket. Replace with a new gasket if damaged.

B18B1 engine:

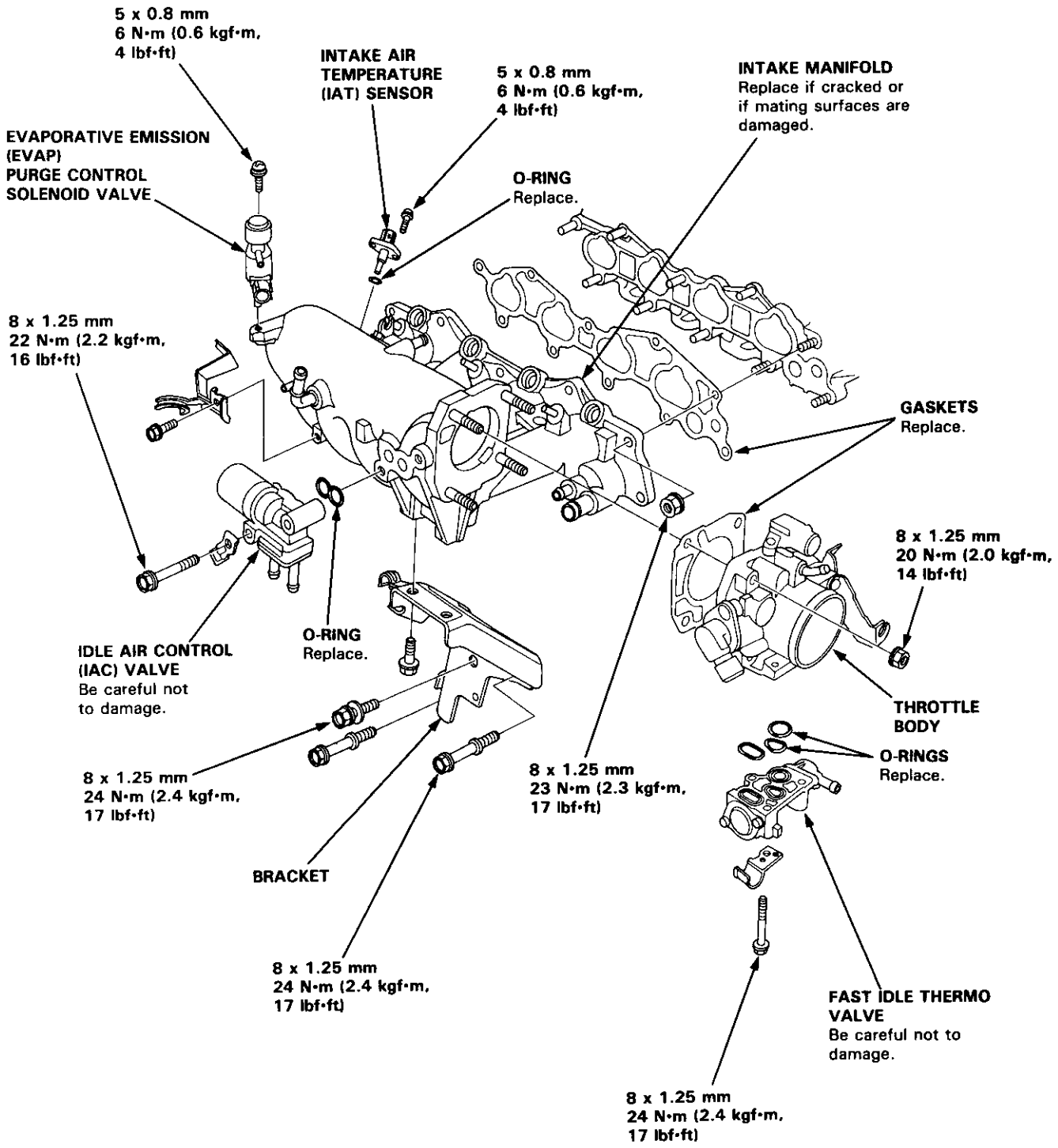

NOTE: Use new O-rings and gaskets when reassembling.
CAUTION: Check for folds or scratches on the surface of the gasket. Replace with a new gasket if damaged.

B18C1 engine:

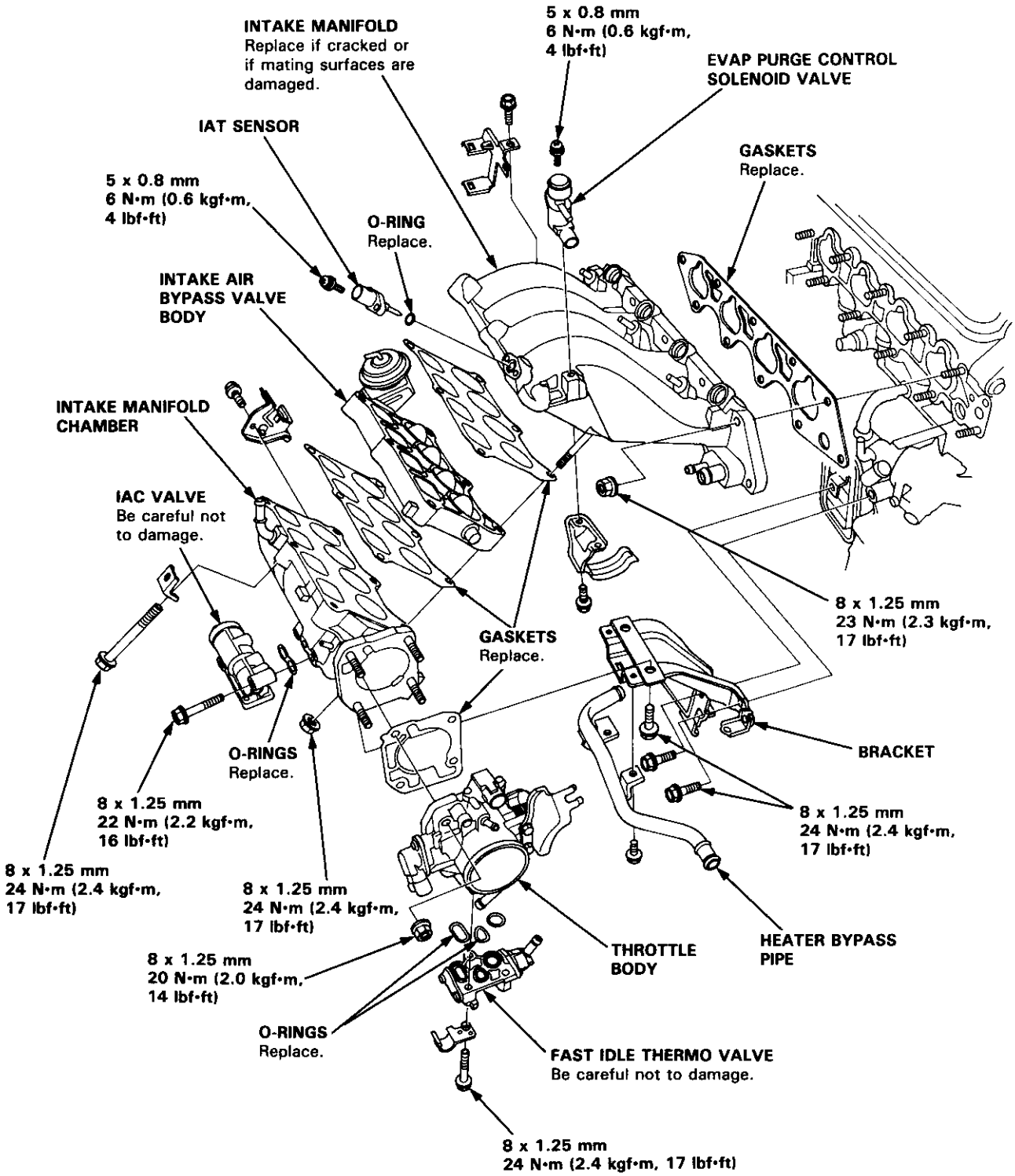

Exhaust Manifold

Replacement

NOTE: Use new gaskets and self-locking nuts when reassembling.

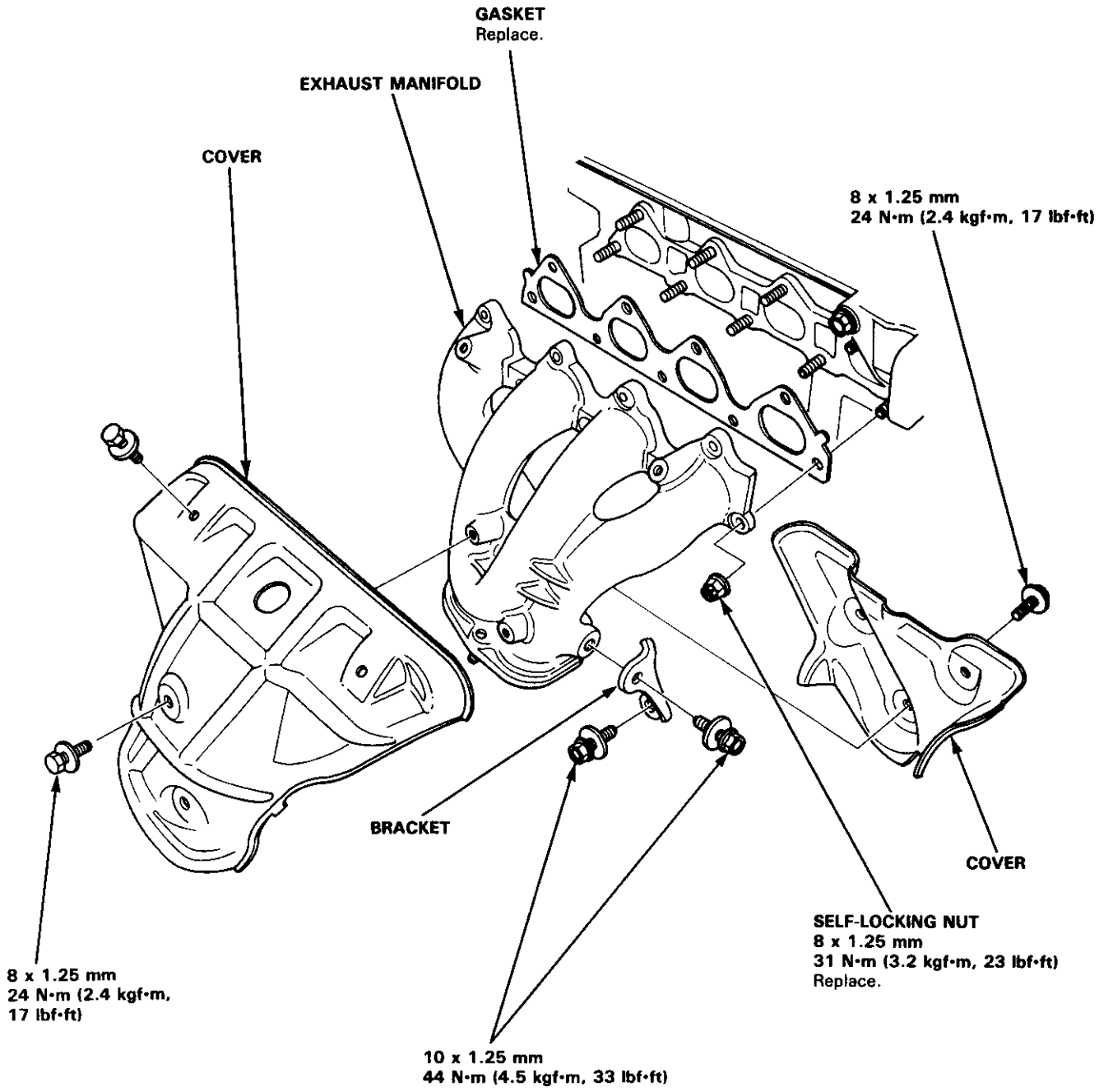

Exhaust Pipe and Muffler

Replacement

NOTE: Use new gaskets and self-locking nuts when reassembling.

B18B1 engine:

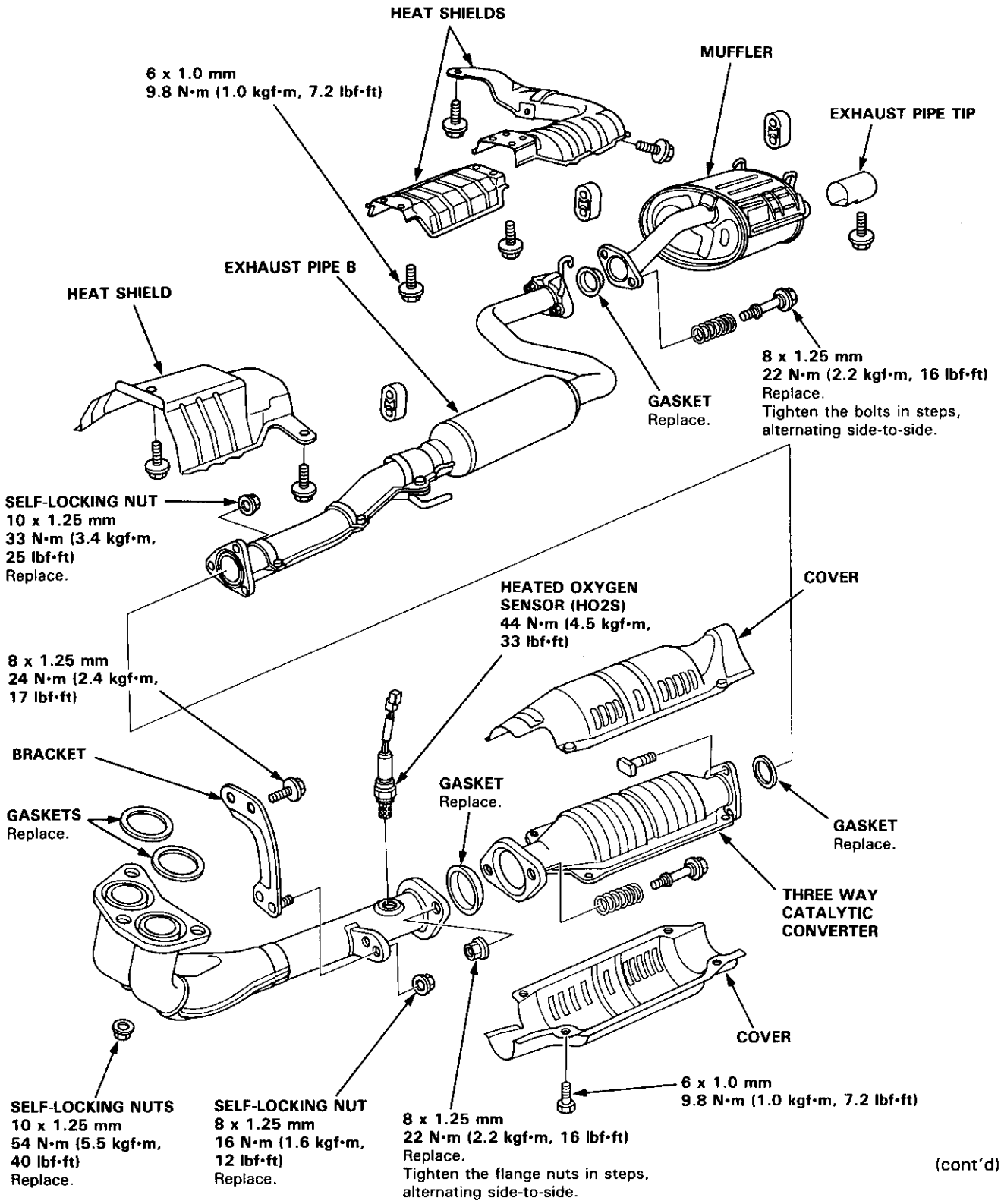

(cont'd)

Exhaust Pipe and Muffler

Replacement (cont'd)

NOTE: Use new gaskets and self-locking nuts when reassembling.

B18C1 engine:

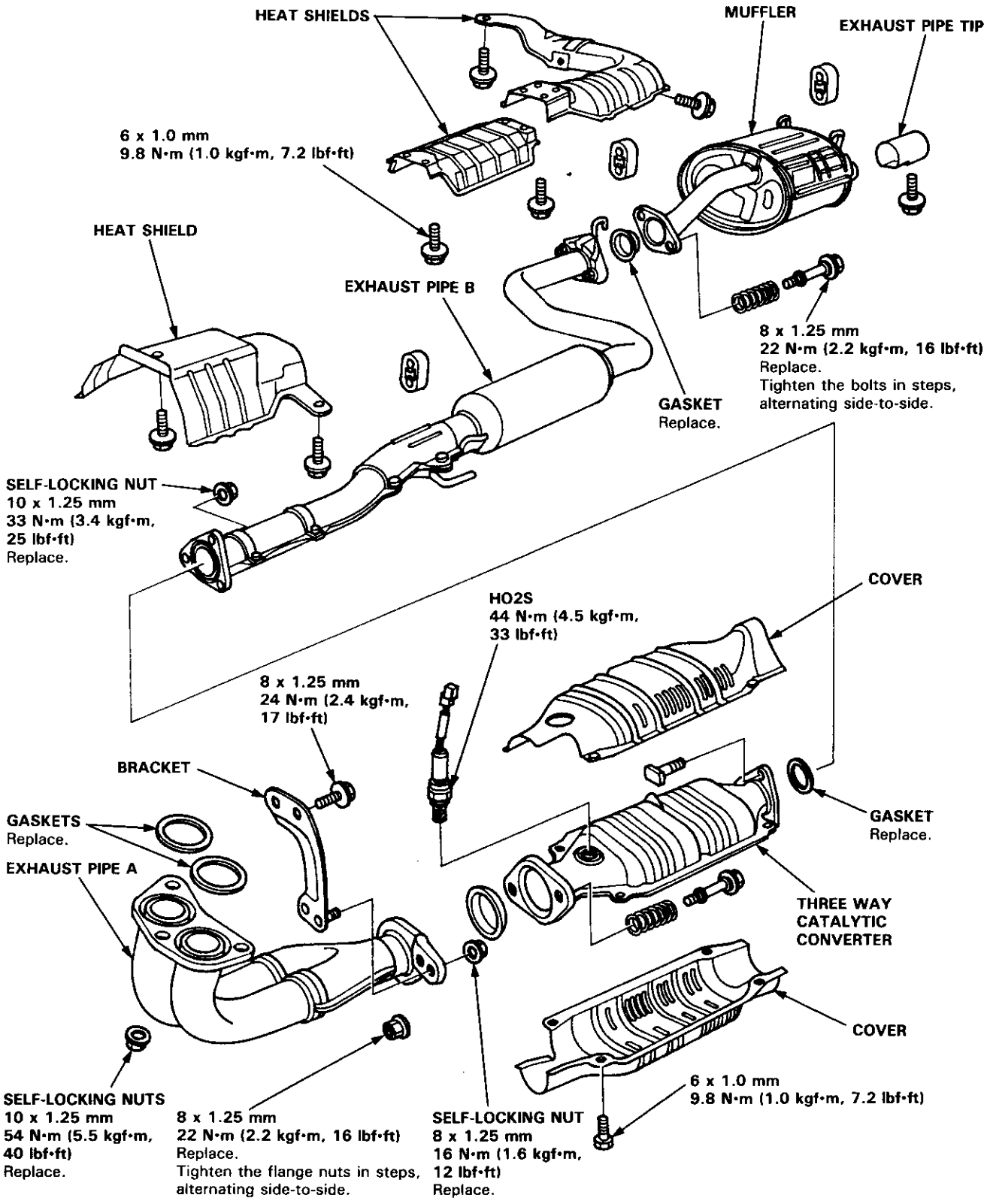

Cooling

Illustrated Index 10-2
Radiator
  Replacement 10-4
  Engine Coolant Refilling and Bleeding 10-5
  Cap Testing 10-6
  Pressure Testing 10-6
Thermostat
  Replacement 10-7
  Testing 10-7
Water Pump
  Illustrated Index 10-8
  Inspection 10-9
  Replacement 10-9

⚠ WARNING System is under high pressure when engine is hot. To avoid danger of releasing scalding engine coolant, remove cap only when engine is cool.

Total Cooling System Capacity (Including heater and reservoir)
B18B1 engine:
M/T: 6.4 ℓ (6.8 US qt, 5.6 Imp qt)
A/T: 6.7 ℓ (7.1 US qt, 5.9 Imp qt)
B18C1 engine:
M/T: 6.7 ℓ (7.1 US qt, 5.9 Imp qt)

CAUTION: If any engine coolant spills on painted portions of the body, rinse it off immediately.

NOTE:
- Check all cooling system hoses for damage, leaks or deterioration and replace if necessary.
- Check all hose clamps and retighten if necessary.
- Use new O-rings when reassembling.

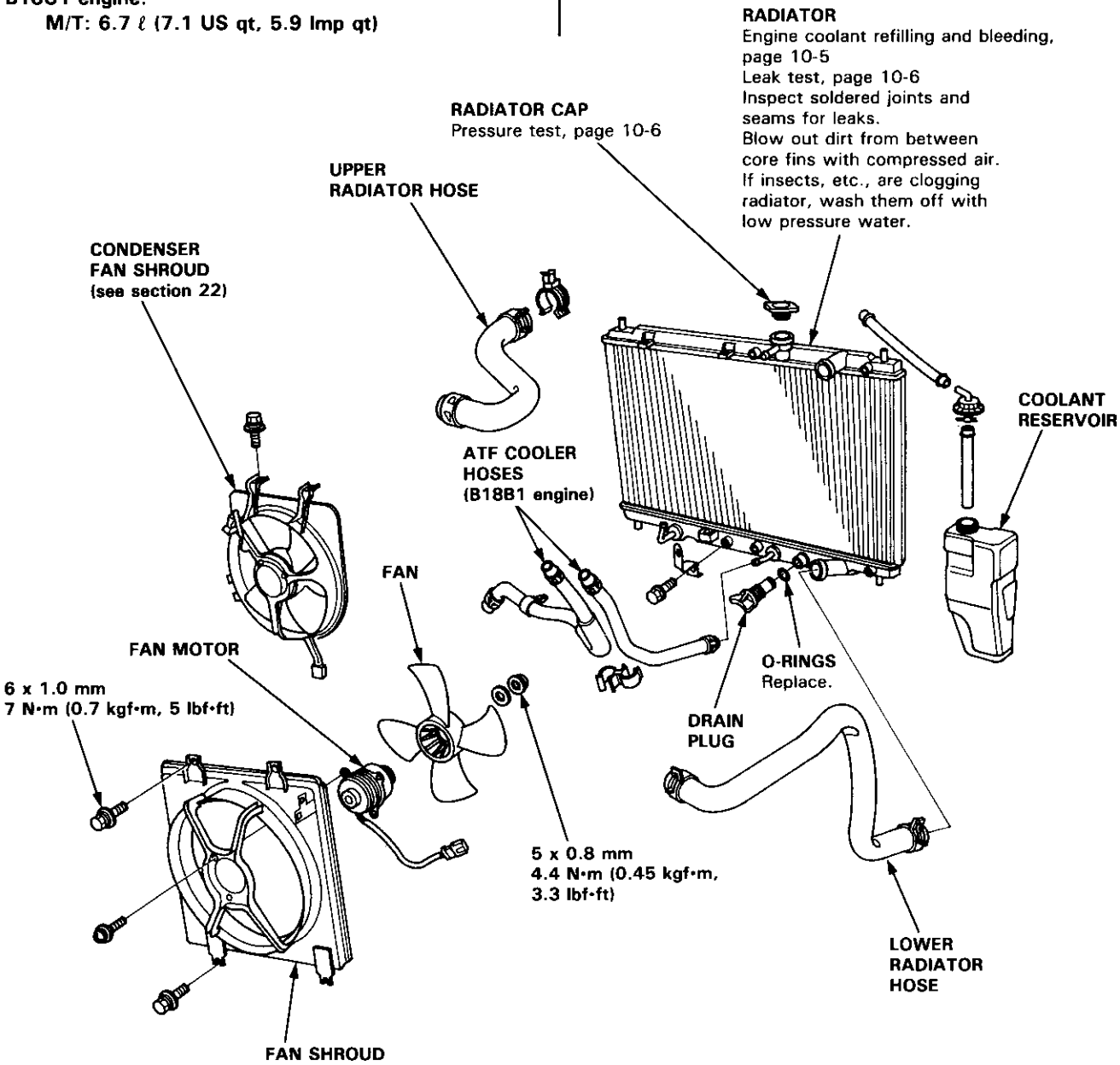

M/T: Manual transmission
A/T: Automatic transmission
ATF: Automatic transmission fluid

ENGINE COMPARTMENT HOSE CONNECTIONS:

B18B1 engine:

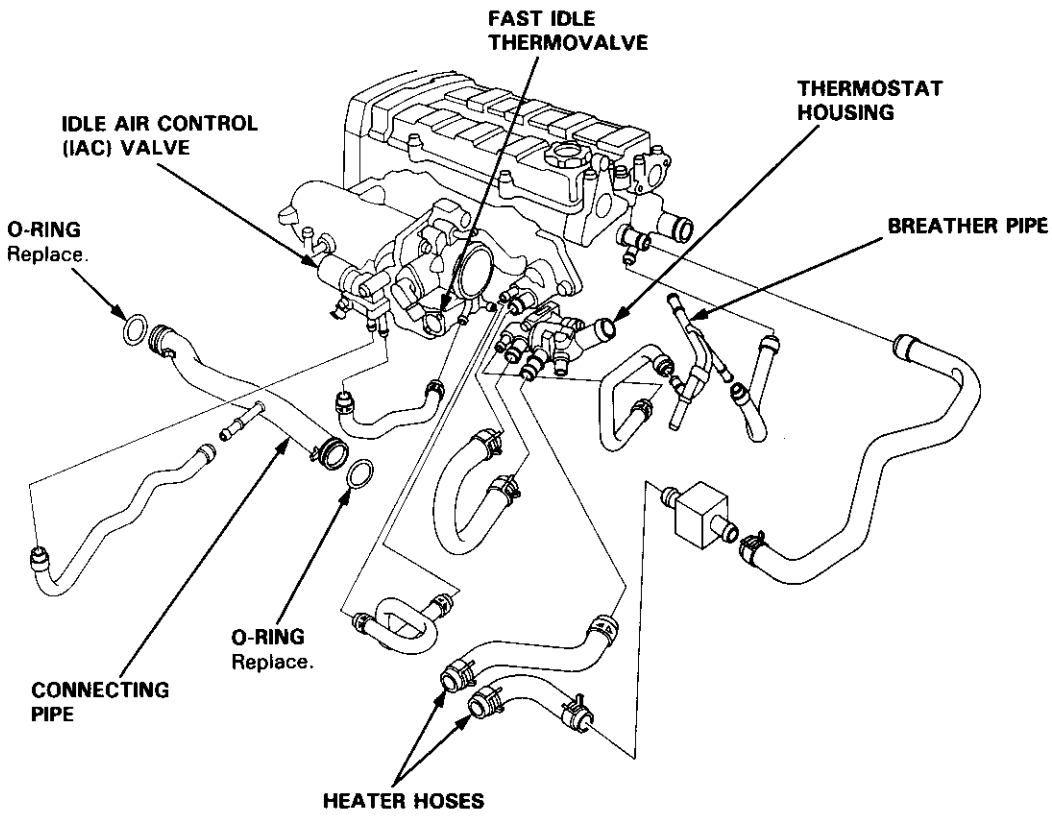

B18C1 engine:

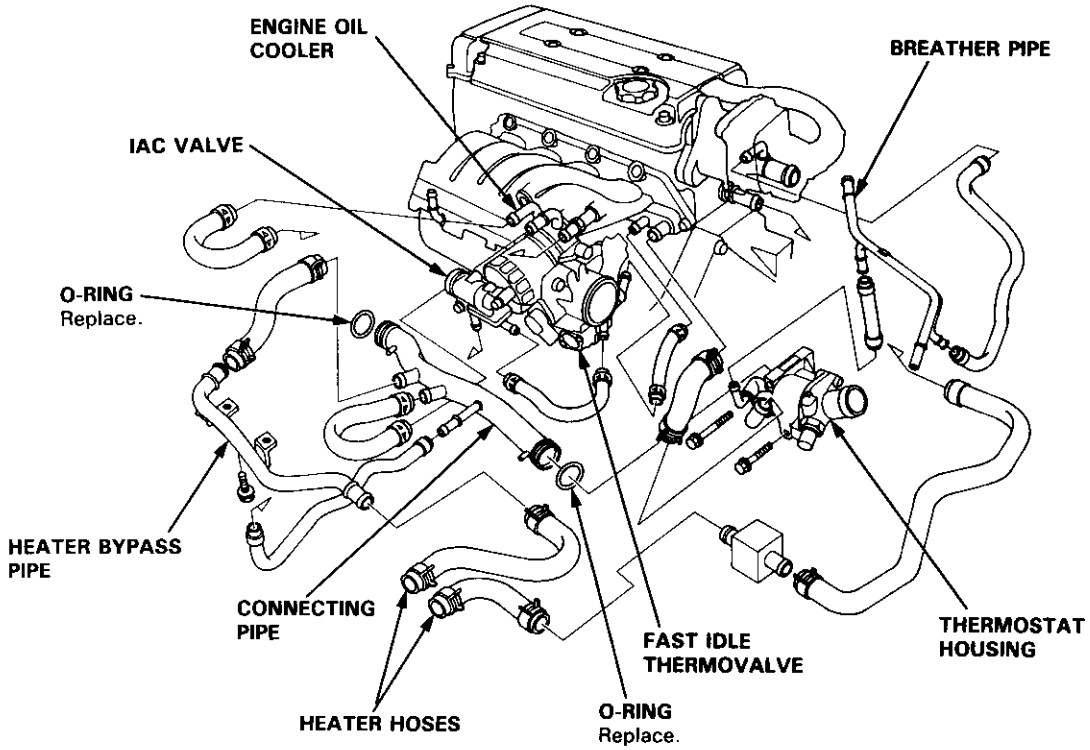

Radiator

Replacement

1. Drain the engine coolant.
2. Remove the upper and lower radiator hoses, and ATF cooler hoses.
3. Disconnect the fan motor connectors.
4. Remove the radiator upper brackets, then pull up the radiator.
5. Remove the fan shroud assemblies and other parts from radiator.

Install the radiator in the reverse order of removal:

NOTE:
- Set the upper and lower cushions securely.
- Fill the radiator and bleed the air.

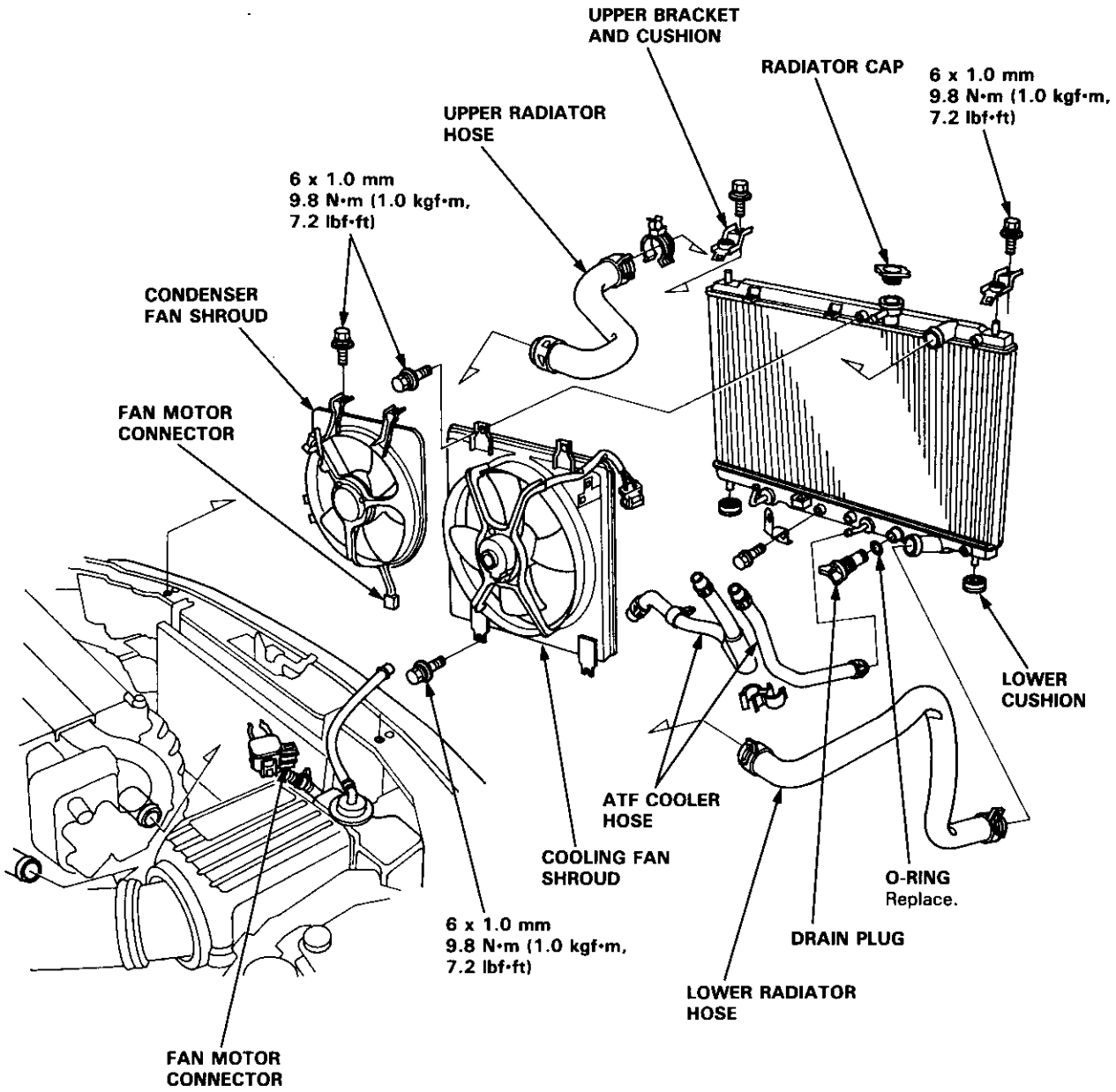

Engine Coolant Refilling and Bleeding

⚠ WARNING Removing the radiator cap while the engine is hot can cause the engine coolant to spray out, seriously scalding you. Always let the engine and radiator cool down before removing the radiator cap.

CAUTION: When pouring engine coolant, be sure to shut the relay box lid and not to let coolant spill on the electrical parts or the paint. If any coolant spills, rinse it off immediately.

1. Slide the heater temperature control lever to maximum heat.
   Make sure the engine and radiator are cool to the touch.

2. Remove the radiator cap.

3. Loosen the drain plug on the bottom of the radiator, and remove the drain bolt from the engine block. Let the coolant drain out.

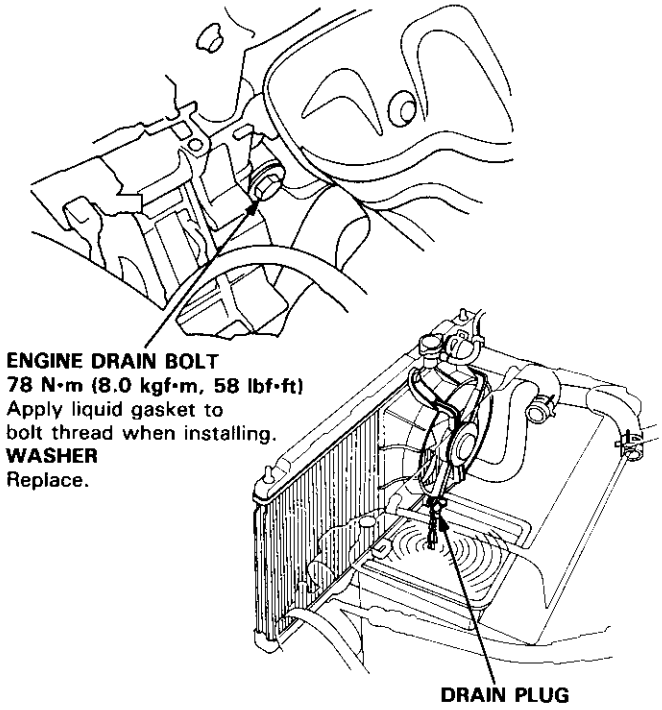

4. Remove the reservoir from its holder by pulling it straight up. Drain the coolant, then put the reservoir back in its holder.

5. When the coolant stops draining, apply liquid gasket to the drain bolt threads, then reinstall the bolt with a new washer. Tighten it securely.

6. Tighten the radiator drain plug securely.

7. Mix the recommended antifreeze/coolant with an equal amount of water in a clean container.

NOTE:
- Use only HONDA-RECOMMENDED antifreeze/coolant.
- For best corrosion protection, the engine coolant concentrations must be maintained year-round at 50% MINIMUM. Coolant concentrations less than 50% may not provide sufficient protection against corrosion or freezing.

CAUTION:
- **Do not mix different brands of anti-freeze/coolants.**
- **Do not use additional rust inhibitors or anti-rust products; they may not be compatible with the recommended engine coolant.**

Engine Coolant Refill Capacity: including reservoir (0.6 ℓ (0.6 US qt, 0.5 Imp qt)).

B18B1 engine:
M/T: 4.4 ℓ (4.6 US qt, 3.9 Imp qt)
A/T: 4.7 ℓ (5.0 US qt, 4.1 Imp qt)

B18C1 engine:
M/T: 4.7 ℓ (5.0 US qt, 4.1 Imp qt)

8. Pour coolant into the radiator up to the base of the filler neck.

9. Loosen the bleed bolt on top of the engine. Tighten it again when coolant comes out in a steady stream with no bubbles.

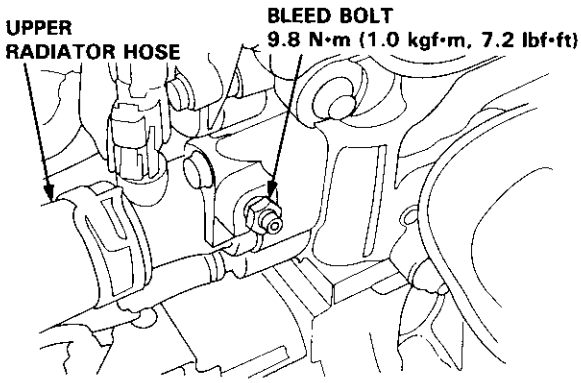

10. Refill the radiator to the base of the filler neck. Put the cap on the radiator, and tighten it only to the first stop. Start the engine and let it run until it warms up (the radiator cooling fan comes on at least twice).

11. Turn off the engine. Check the level in the radiator, and add coolant if needed. Install the radiator cap, and tighten it fully.

12. Fill the reservoir to the MAX mark. Install the reservoir cap.

Radiator

Cap Testing

1. Remove the radiator cap, wet its seal with engine coolant, then install it on the pressure tester.

2. Apply a pressure of:
   93–123 kPa
   (0.95–1.25 kgf/cm², 13.5–17.8 psi)

3. Check for a drop in pressure.

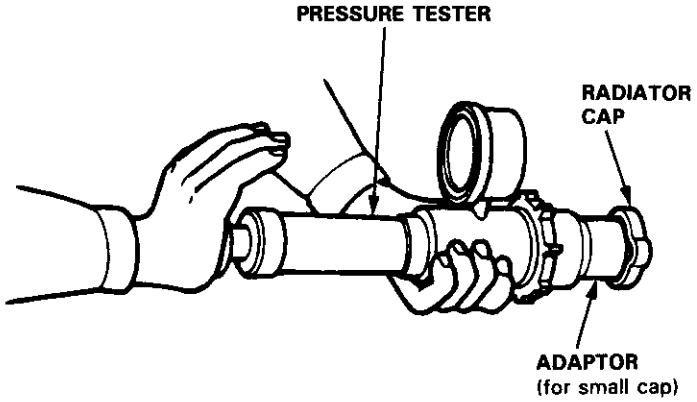

Pressure Testing

1. Wait until the engine is cool, then carefully remove the radiator cap and fill the radiator with engine coolant to the top of the filler neck.

2. Attach the pressure tester to the radiator and apply a pressure of:
   93–123 kPa
   (0.95–1.25 kgf/cm², 13.5–17.8 psi)

3. Inspect for engine coolant leaks and a drop in pressure.

4. Remove the tester and reinstall the radiator cap.

   NOTE:
   - Check for engine oil in the engine coolant and/or coolant in the engine oil.
   - Check for ATF in the engine coolant and/or coolant in the ATF (A/T).

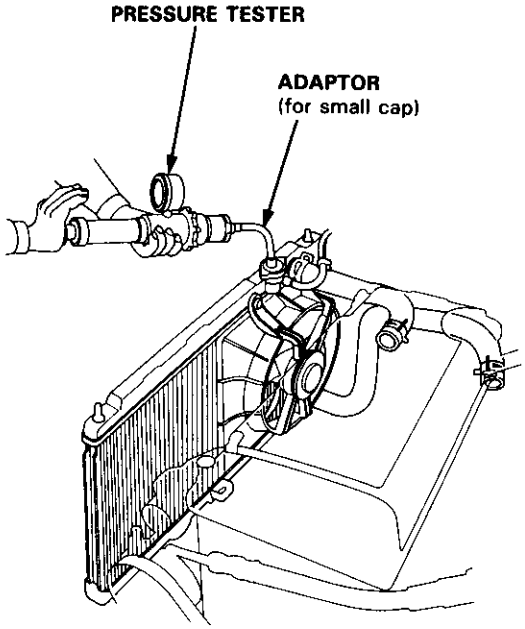

Thermostat

Replacement

NOTE: Use new gaskets and O-rings when reassembling.

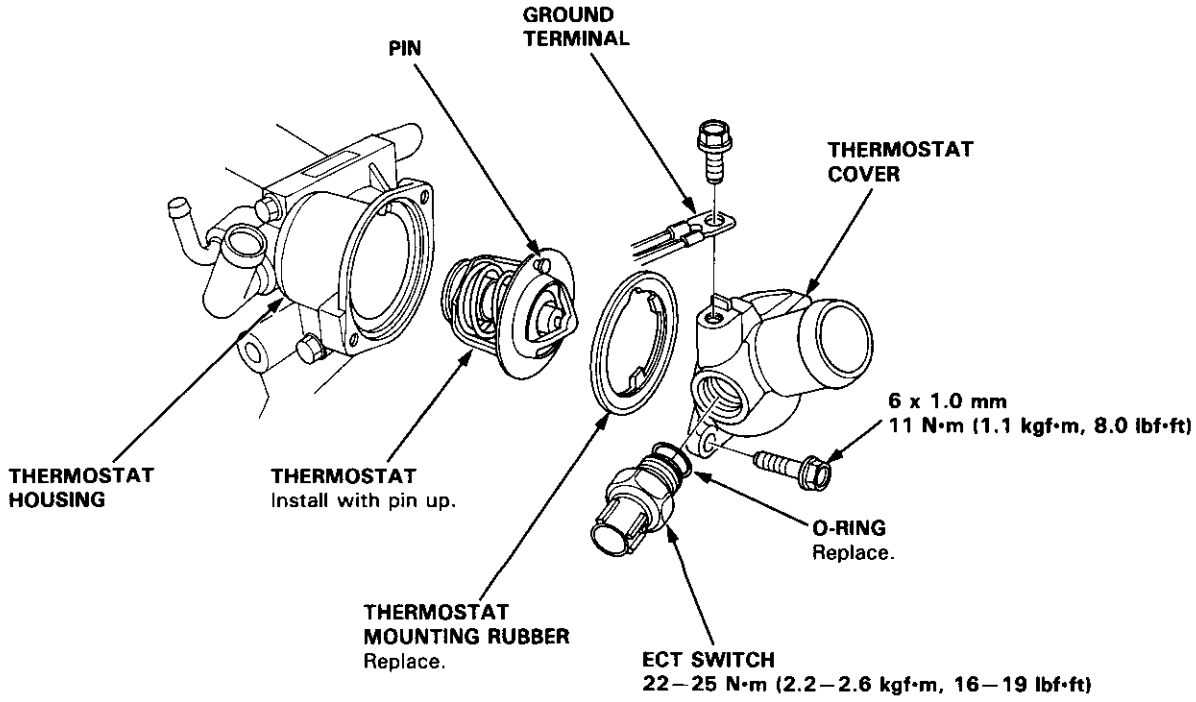

Testing

Replace thermostat if it is open at room temperature.

To test a closed thermostat:

1. Suspend the thermostat in a container of water as shown.
2. Heat the water and check the temperature with a thermometer. Check the temperature at which the thermostat first opens and at full lift.

   CAUTION: Do not let the thermometer touch the bottom of the hot container.

3. Measure the lift height of the thermostat when it's fully open.

   STANDARD THERMOSTAT
   Lift height: above 8.0 mm (0.31 in)
   Starts opening: 169–176°F (76–80°C)
   Fully open: 194°F (90°C)

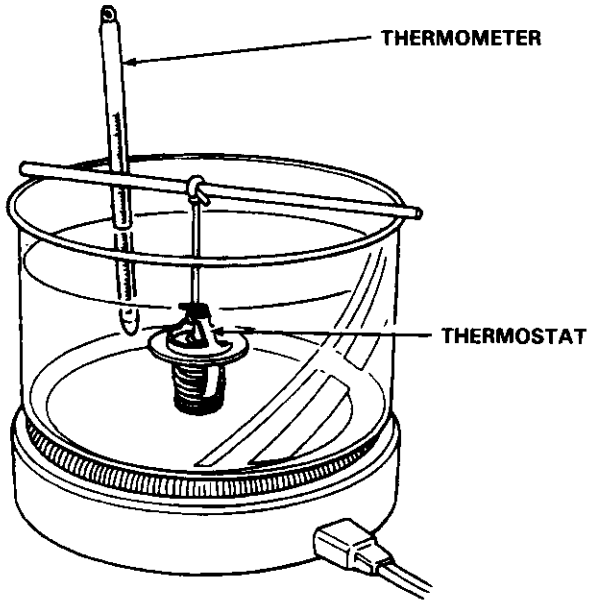

Water Pump

Illustrated Index

NOTE:
- Use new O-rings and new special bolts when reassembling.
- Use liquid gasket, Part No. 08718–0001.

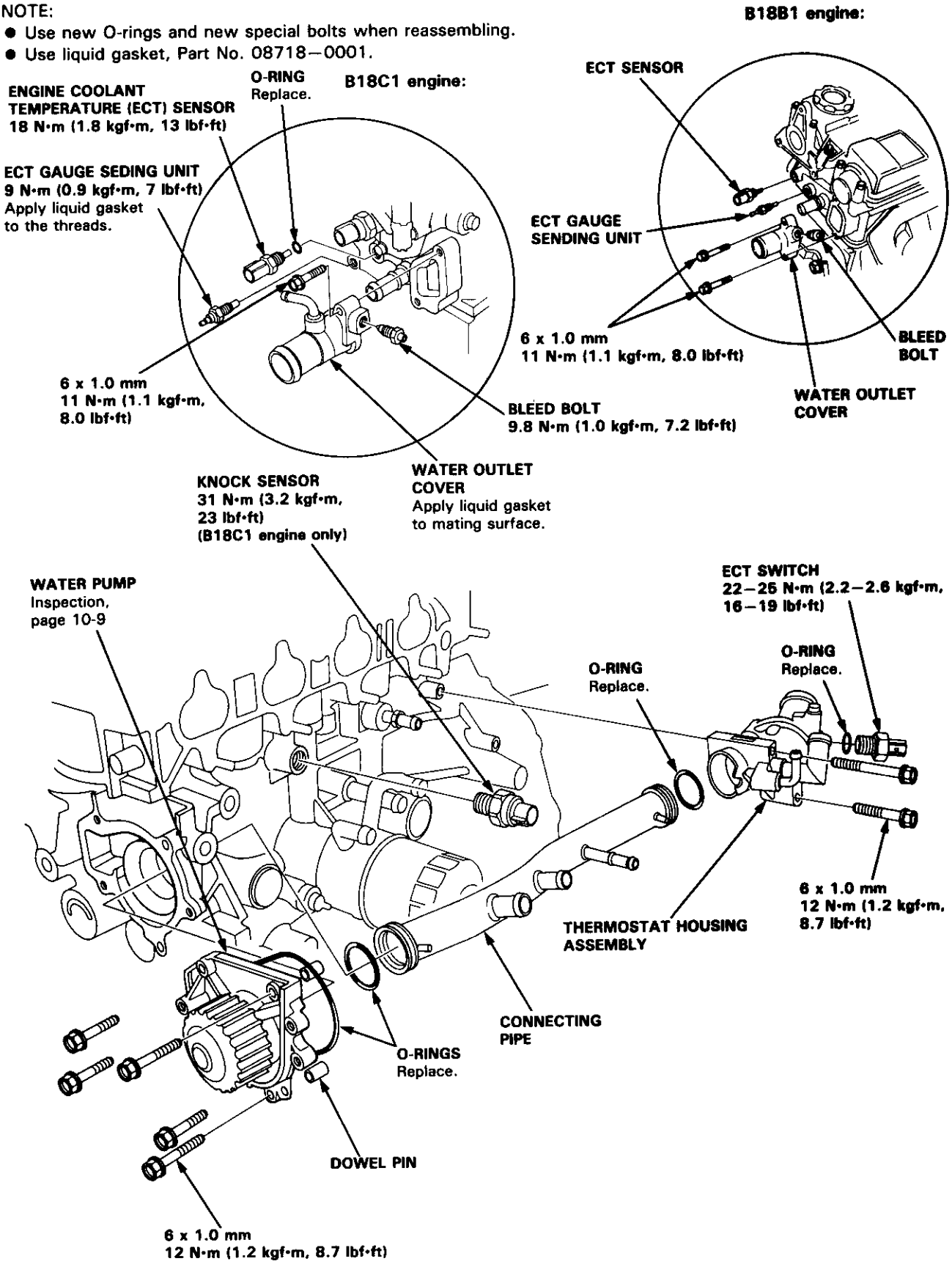

Inspection

1. Remove the timing belt (B18B1 engine: see page 6-10, B18C1 engine: see page 6-49).

2. Check that the water pump pulley turns counter-clockwise.

3. Check for signs of seal leakage.

   NOTE: A small amount of "weeping" from the bleed hole is normal.

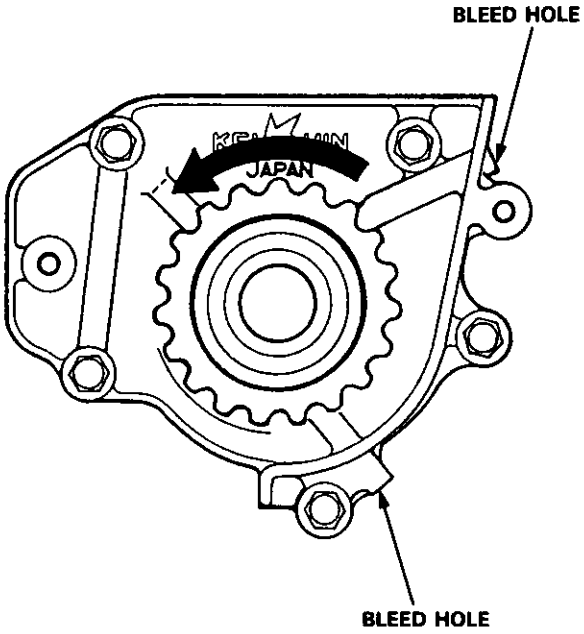

Replacement

1. Remove the timing belt (B18B1 engine: see page 6-10, B18C1 engine: see page 6-49).

2. Remove the camshaft pulleys and the back cover (B18B1 engine: see page 6-19, B18C1 engine: see page 6-58).

3. Remove the water pump by removing five bolts.

   NOTE: Inspect, repair and clean the O-ring groove and mating surface with the cylinder block.

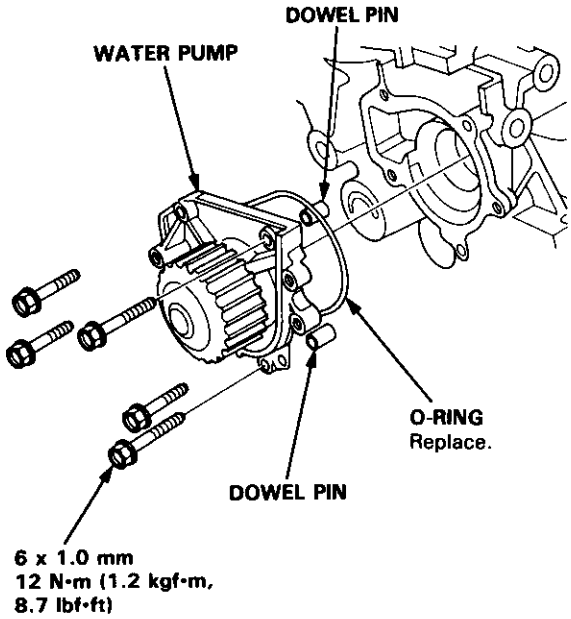

4. Install the water pump in the reverse order of removal.

   NOTE:
   - Keep the O-ring in position when installing.
   - Clean the spilled engine coolant.

Fuel and Emissions

Special Tools 11-2
Component Location
  Index 11-3
System Description
  Vacuum Connections 11-8
  Electrical Connections 11-12
  System Connectors 11-20
Troubleshooting
  Troubleshooting Guide 11-32
  Self-diagnostic Procedures 11-34
  How to Read Flowcharts 11-39
PGM-FI System
  System Description 11-40
Troubleshooting Flowcharts
  Engine Control Module 11-42
  Heated Oxygen Sensor 11-46
  Heated Oxygen Sensor Heater 11-47
  Fuel Supply System 11-50
  Manifold Absolute Pressure
    Sensor 11-52
  Top Dead Center/Crankshaft
    Position/Cylinder Position sensor 11-56
  Engine Coolant Temperature Sensor 11-58
  Throttle Position Sensor 11-60
  Intake Air Temperature Sensor 11-62
  Barometric Pressure Sensor 11-64
  Ignition Output Signal 11-66
  Vehicle Speed Sensor 11-68
  Electrical Load Detector 11-70
  Knock Sensor [B18C1 engine] 11-74
  A/T FI Signal A/B 11-76

Idle Control System

System Troubleshooting Guide 11-78
System Description 11-79
Troubleshooting Flowcharts
  Idle Air Control Valve 11-82
  Air Conditioning Signal 11-84
  Alternator FR Signal 11-86
  Automatic Transaxle (A/T) Gear
    Position Signal 11-88
  Brake Switch Signal 11-90
  Starter Switch Signal 11-92
  Power Steering Pressure Switch Signal ... 11-93
Fast Idle Thermo Valve 11-94
Idle Speed Setting 11-95

Fuel Supply System

System Troubleshooting Guide 11-97
Fuel Lines 11-98
System Description 11-100
Fuel Pressure 11-100
Fuel Injectors 11-102
Fuel Pressure Regulator 11-106
Fuel Filter 11-108
Fuel Pump 11-109
PGM-FI Main Relay 11-111
Fuel Tank 11-114

Intake Air System

System Troubleshooting Guide 11-115
System Description 11-116
Air Cleaner 11-117
Throttle Cable 11-118
Throttle Body 11-120
Intake Air Bypass Control System
  [B18C1 engine] 11-123
Intake Manifold [B18B1 engine] 11-128

Emission Control System

System Troubleshooting Guide 11-129
System Description 11-130
Tailpipe Emission 11-130
Three Way Catalytic Converter 11-131
Positive Crankcase Ventilation System 11-134
Evaporative Emission Control 11-135

Special Tools

Ref. No	Tool Number	Description	Qty	Page Reference
①	A973X–041–XXXXX	Vacuum Pump/Gauge	1	11-120, 124, 137, 140
②	07JAZ–001000B	Vacuum/Pressure Gauge 0–4 in. Hg	1	11-139, 140
③	07LAJ–PT3010A	Test Harness	1	11-37
④	07PAZ–0010100	SCS Short Connector	1	11-34
⑤	07406–0040001	Fuel Pressure Gauge	1	11-101, 106

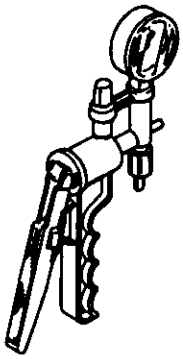

①

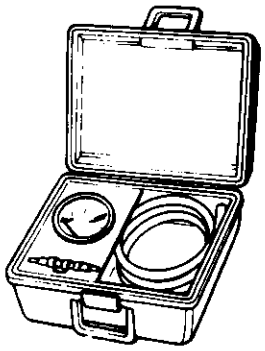

②

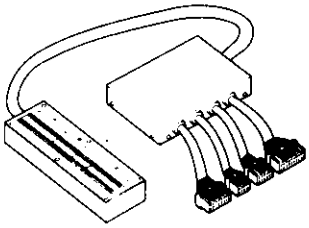

③

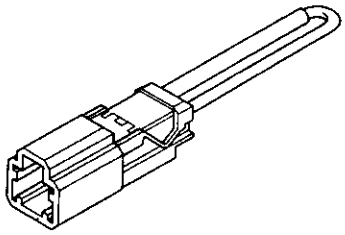

④

⑤

Component Locations

Index

B18B1 engine:

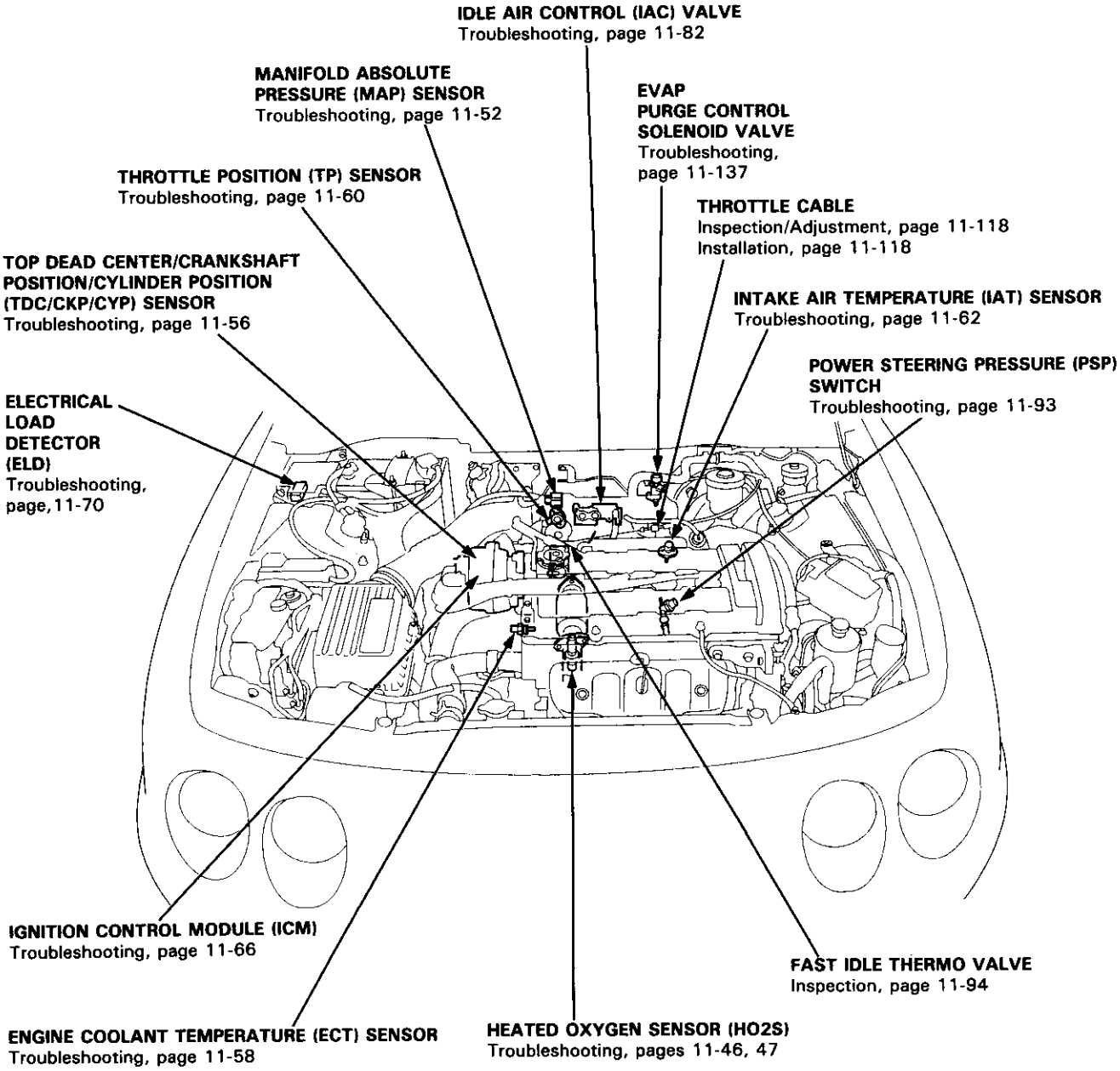

Component Locations

Index

B18C1 engine:

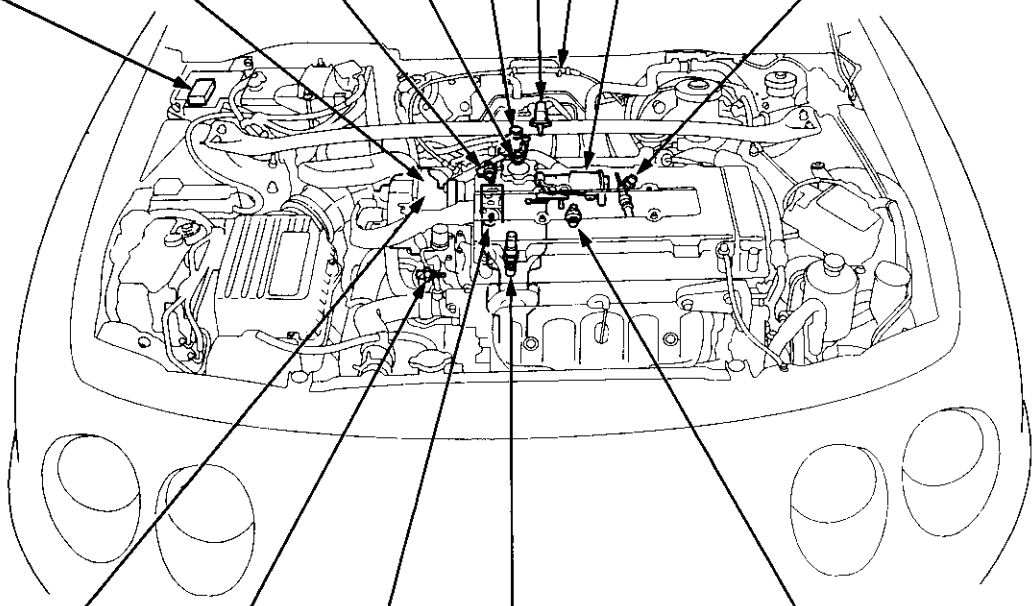

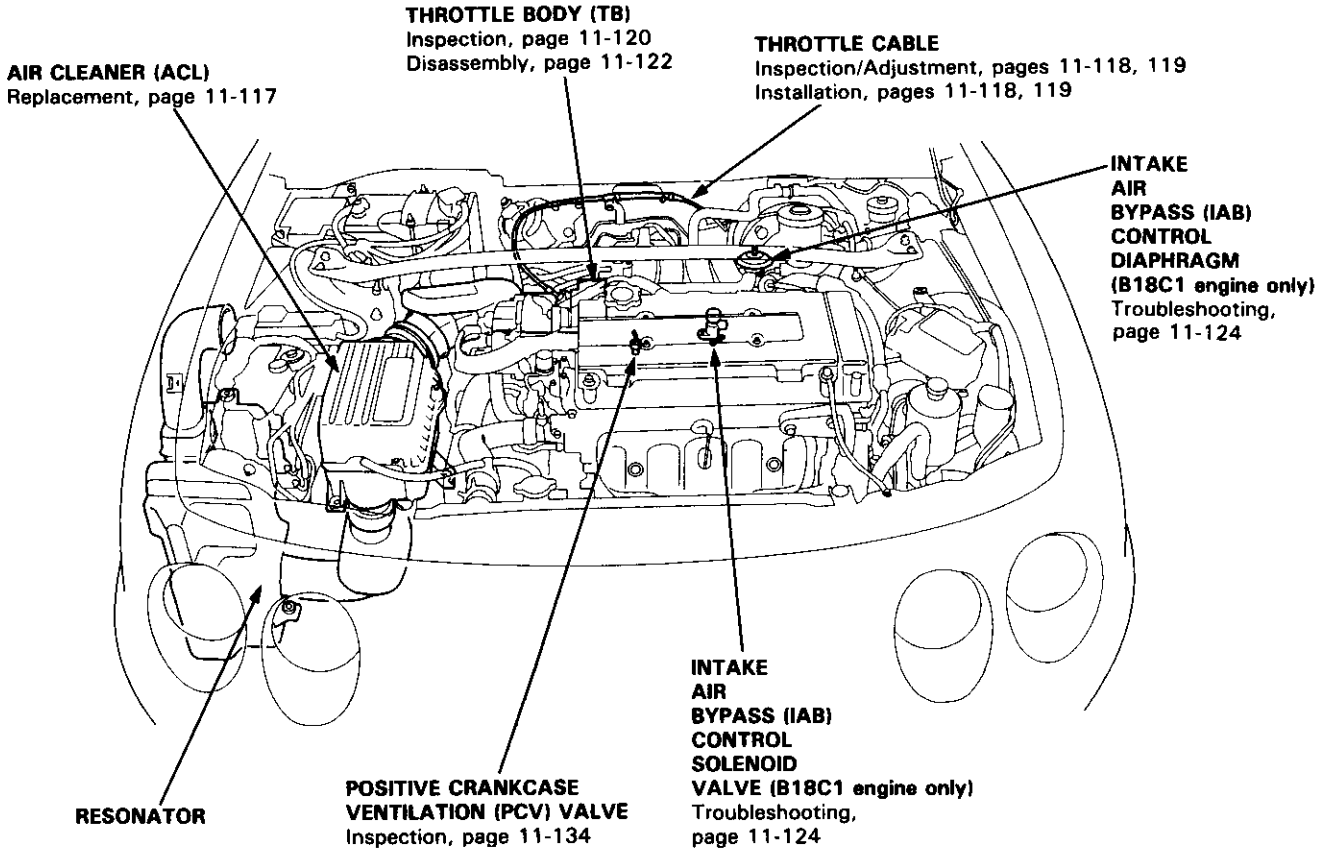
THROTTLE BODY (TB)
Inspection, page 11-120
Disassembly, page 11-122
AIR CLEANER (ACL)
Replacement, page 11-117
THROTTLE CABLE
Inspection/Adjustment, pages 11-118, 119
Installation, pages 11-118, 119
INTAKE AIR BYPASS (IAB) CONTROL DIAPHRAGM (B18C1 engine only)
Troubleshooting, page 11-124
INTAKE AIR BYPASS (IAB) CONTROL SOLENOID VALVE (B18C1 engine only)
Troubleshooting, page 11-124
POSITIVE CRANKCASE VENTILATION (PCV) VALVE
Inspection, page 11-134
RESONATOR

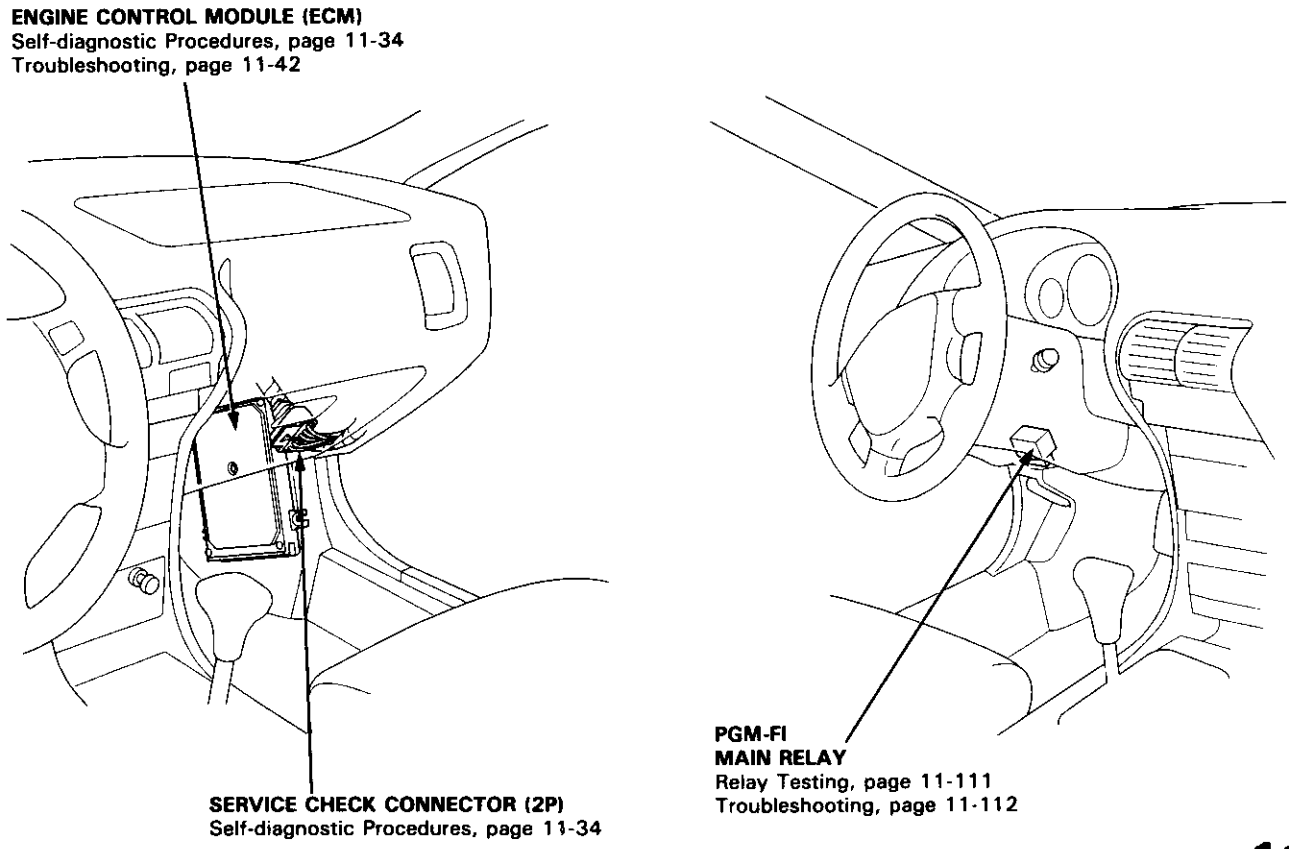
ENGINE CONTROL MODULE (ECM)
Self-diagnostic Procedures, page 11-34
Troubleshooting, page 11-42
SERVICE CHECK CONNECTOR (2P)
Self-diagnostic Procedures, page 11-34
PGM-FI MAIN RELAY
Relay Testing, page 11-111
Troubleshooting, page 11-112

Index

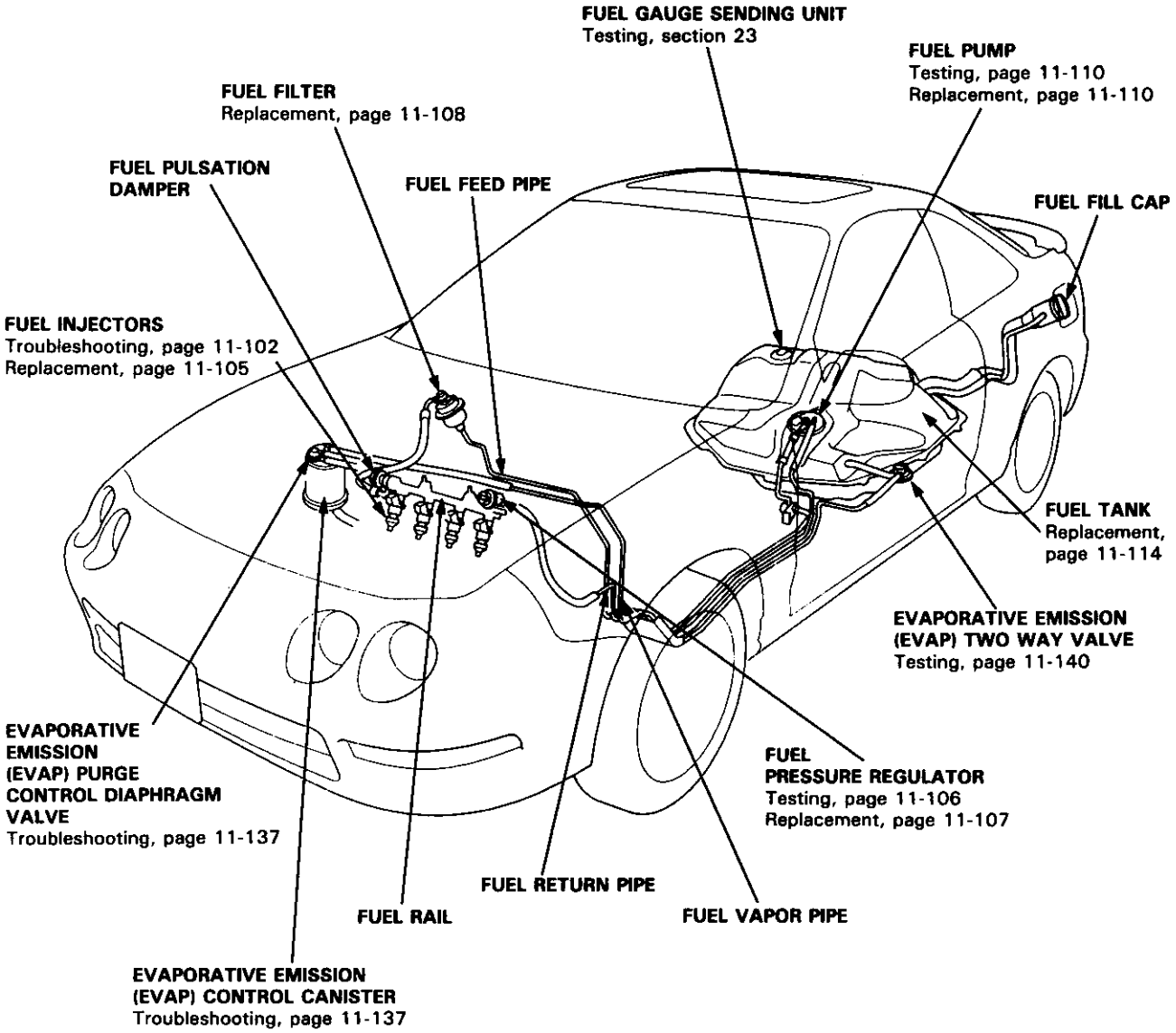
FUEL GAUGE SENDING UNIT
Testing, section 23
FUEL PUMP
Testing, page 11-110
Replacement, page 11-110
FUEL FILTER
Replacement, page 11-108
FUEL PULSATION DAMPER
FUEL FEED PIPE
FUEL FILL CAP
FUEL INJECTORS
Troubleshooting, page 11-102
Replacement, page 11-105
FUEL TANK
Replacement, page 11-114
EVAPORATIVE EMISSION (EVAP) TWO WAY VALVE
Testing, page 11-140
EVAPORATIVE EMISSION (EVAP) PURGE CONTROL DIAPHRAGM VALVE
Troubleshooting, page 11-137
FUEL PRESSURE REGULATOR
Testing, page 11-106
Replacement, page 11-107
FUEL RETURN PIPE
FUEL RAIL
FUEL VAPOR PIPE
EVAPORATIVE EMISSION (EVAP) CONTROL CANISTER
Troubleshooting, page 11-137

System Description

Vacuum Connections

B18B1 engine:

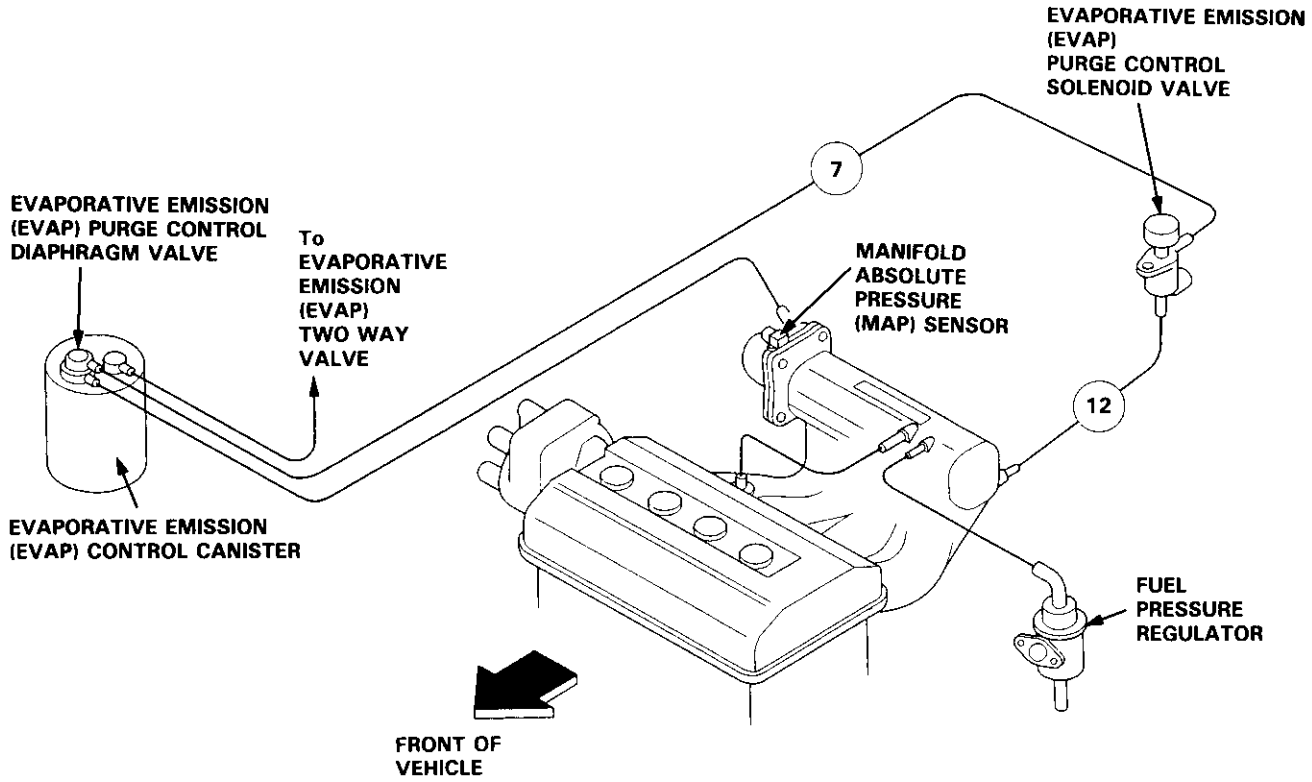

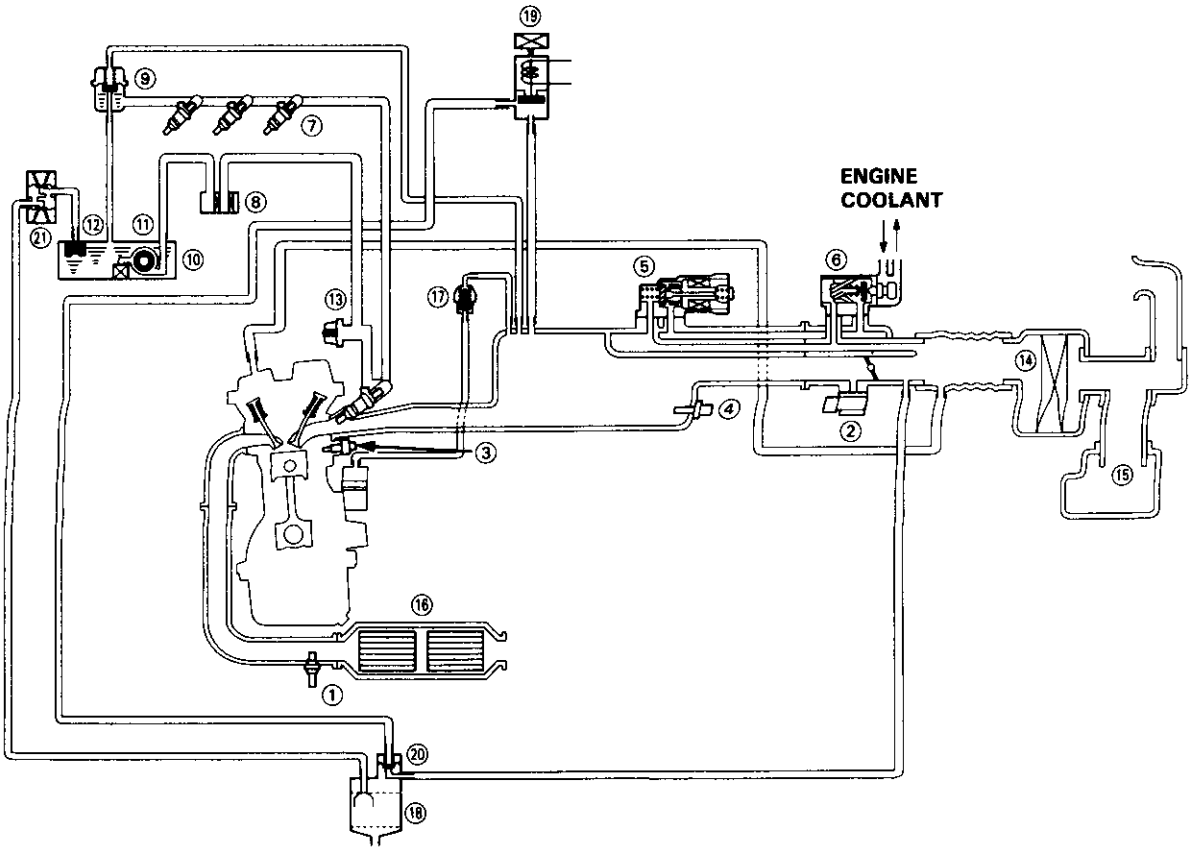

① HEATED OXYGEN SENSOR (HO2S)
② MANIFOLD ABSOLUTE PRESSURE (MAP) SENSOR
③ ENGINE COOLANT TEMPERATURE (ECT) SENSOR
④ INTAKE AIR TEMPERATURE (IAT) SENSOR
⑤ IDLE AIR CONTROL (IAC) VALVE
⑥ FAST IDLE THERMO VALVE
⑦ FUEL INJECTOR
⑧ FUEL FILTER
⑨ FUEL PRESSURE REGULATOR
⑩ FUEL PUMP (FP)
⑪ FUEL TANK
⑫ FUEL TANK EVAPORATIVE EMISSION (EVAP) VALVE
⑬ FUEL PULSATION DAMPER
⑭ AIR CLEANER
⑮ RESONATOR
⑯ THREE WAY CATALYTIC CONVERTER (TWC)
⑰ POSITIVE CRANKCASE VENTILATION (PCV) VALVE
⑱ EVAPORATIVE EMISSION (EVAP) CONTROL CANISTER
⑲ EVAPORATIVE EMISSION (EVAP) PURGE CONTROL SOLENOID VALVE
⑳ EVAPORATIVE EMISSION (EVAP) PURGE CONTROL DIAPHRAGM VALVE
㉑ EVAPORATIVE EMISSION (EVAP) TWO WAY VALVE

System Description

Vacuum Connections

B18C1 engine:

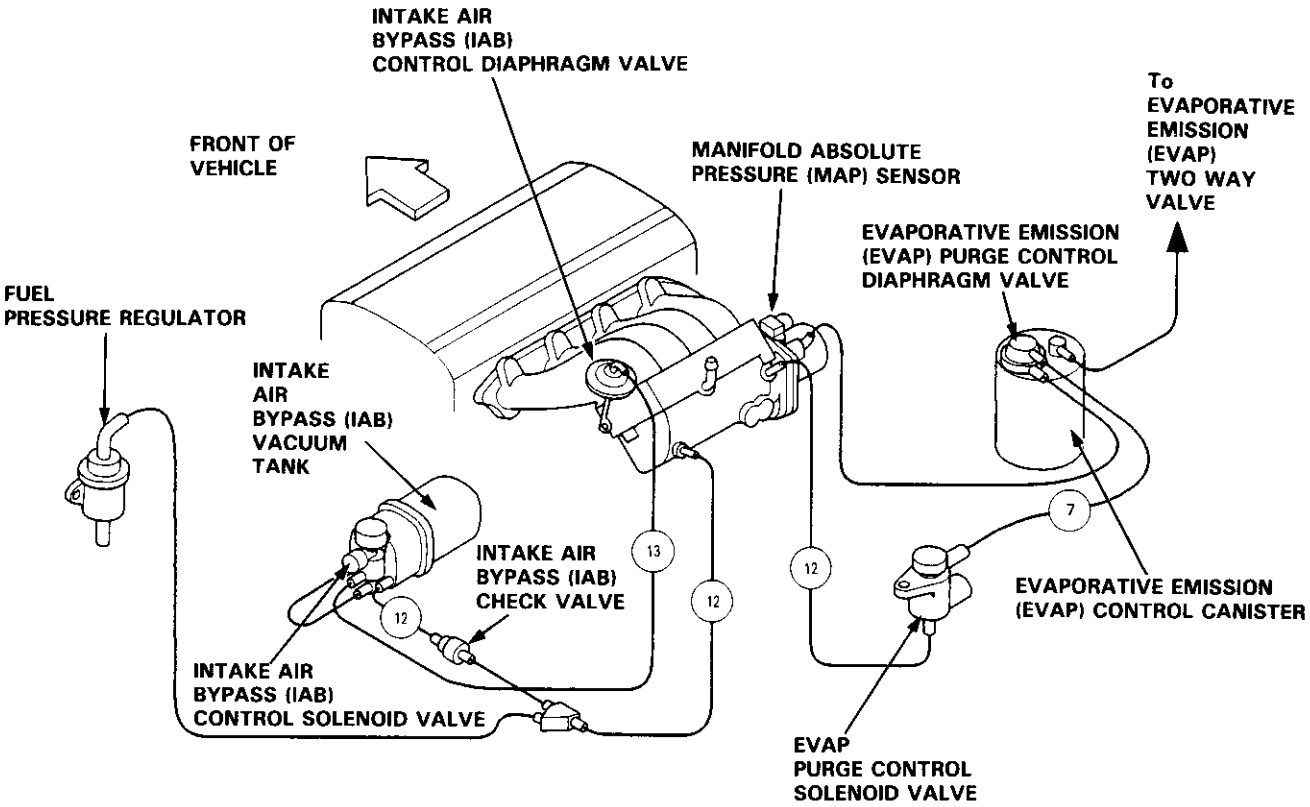

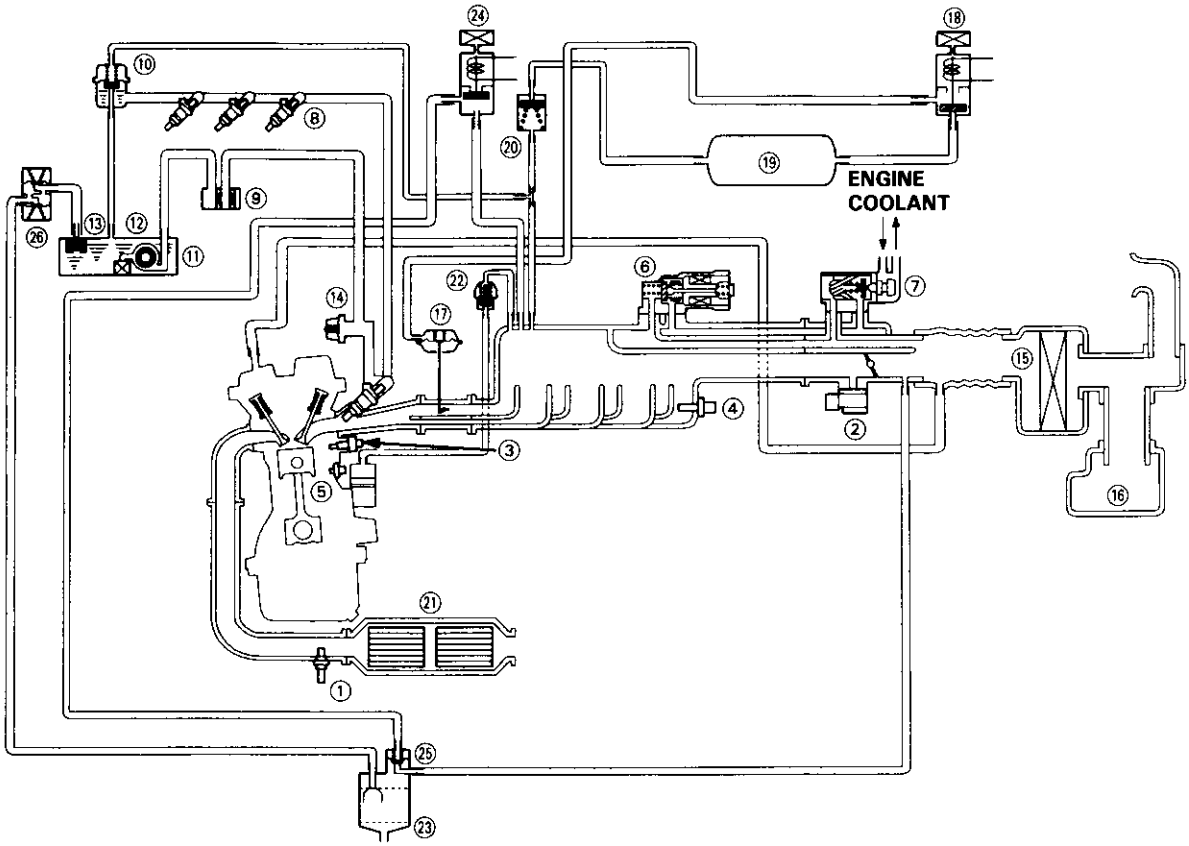

① HEATED OXYGEN SENSOR (HO2S)
② MANIFOLD ABSOLUTE PRESSURE (MAP) SENSOR
③ ENGINE COOLANT TEMPERATURE (ECT) SENSOR
④ INTAKE AIR TEMPERATURE (IAT) SENSOR
⑤ KNOCK SENSOR (KS)
⑥ IDLE AIR CONTROL (IAC) VALVE
⑦ FAST IDLE THERMO VALVE
⑧ FUEL INJECTOR
⑨ FUEL FILTER
⑩ FUEL PRESSURE REGULATOR
⑪ FUEL PUMP (FP)
⑫ FUEL TANK
⑬ FUEL TANK EVAPORATIVE EMISSION (EVAP) VALVE
⑭ FUEL PULSATION DAMPER
⑮ AIR CLEANER
⑯ RESONATOR
⑰ INTAKE AIR BYPASS (IAB) CONTROL DIAPHRAGM VALVE
⑱ INTAKE AIR BYPASS (IAB) COTROL SOLENOID VALVE
⑲ INTAKE AIR BYPASS (IAB) VACUUM TANK
⑳ INTAKE AIR BYPASS (IAB) CHECK VALVE
㉑ THREE WAY CATALYTIC CONVERTER (TWC)
㉒ POSITIVE CRANKCASE VENTILATION (PCV) VALVE
㉓ EVAPORATIVE EMISSION (EVAP) CONTROL CANISTER
㉔ EVAPORATIVE EMISSION (EVAP) PURGE CONTROL SOLENOID VALVE
㉕ EVAPORATIVE EMISSION (EVAP) PURGE CONTROL DIAPHRAGM VALVE
㉖ EVAPORATIVE EMISSION (EVAP) TWO WAY VALVE

Electrical Connections

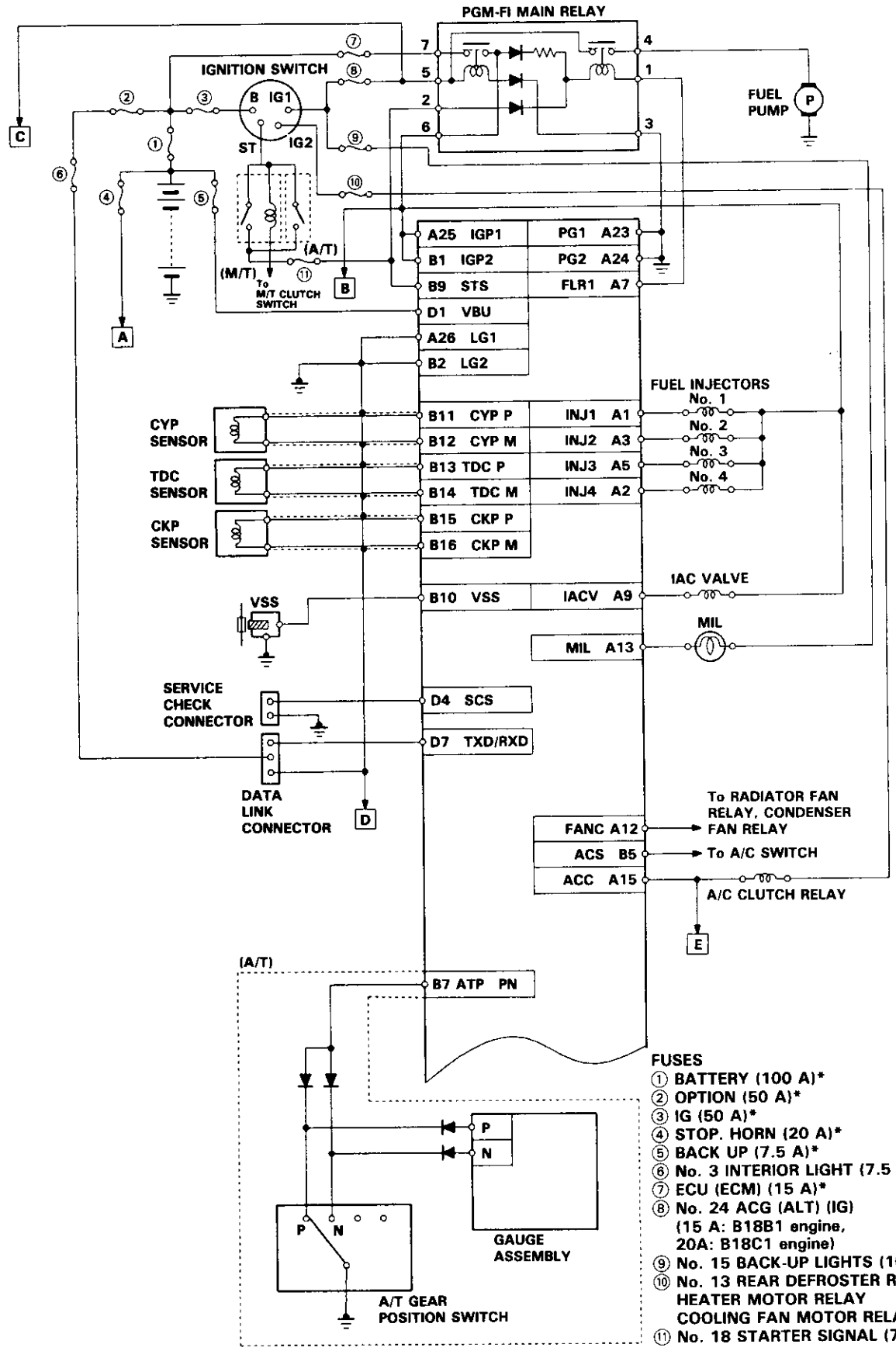

FUSES

① BATTERY (100 A)*
② OPTION (50 A)*
③ IG (50 A)*
④ STOP. HORN (20 A)*
⑤ BACK UP (7.5 A)*
⑥ No. 3 INTERIOR LIGHT (7.5 A)
⑦ ECU (ECM) (15 A)*
⑧ No. 24 ACG (ALT) (IG)
(15 A: B18B1 engine,
20A: B18C1 engine)
⑨ No. 15 BACK-UP LIGHTS (10 A)
⑩ No. 13 REAR DEFROSTER RELAY
HEATER MOTOR RELAY
COOLING FAN MOTOR RELAY (7.5 A)
⑪ No. 18 STARTER SIGNAL (7.5 A)

*: UNDER-HOOD FUSE/RELAY BOX

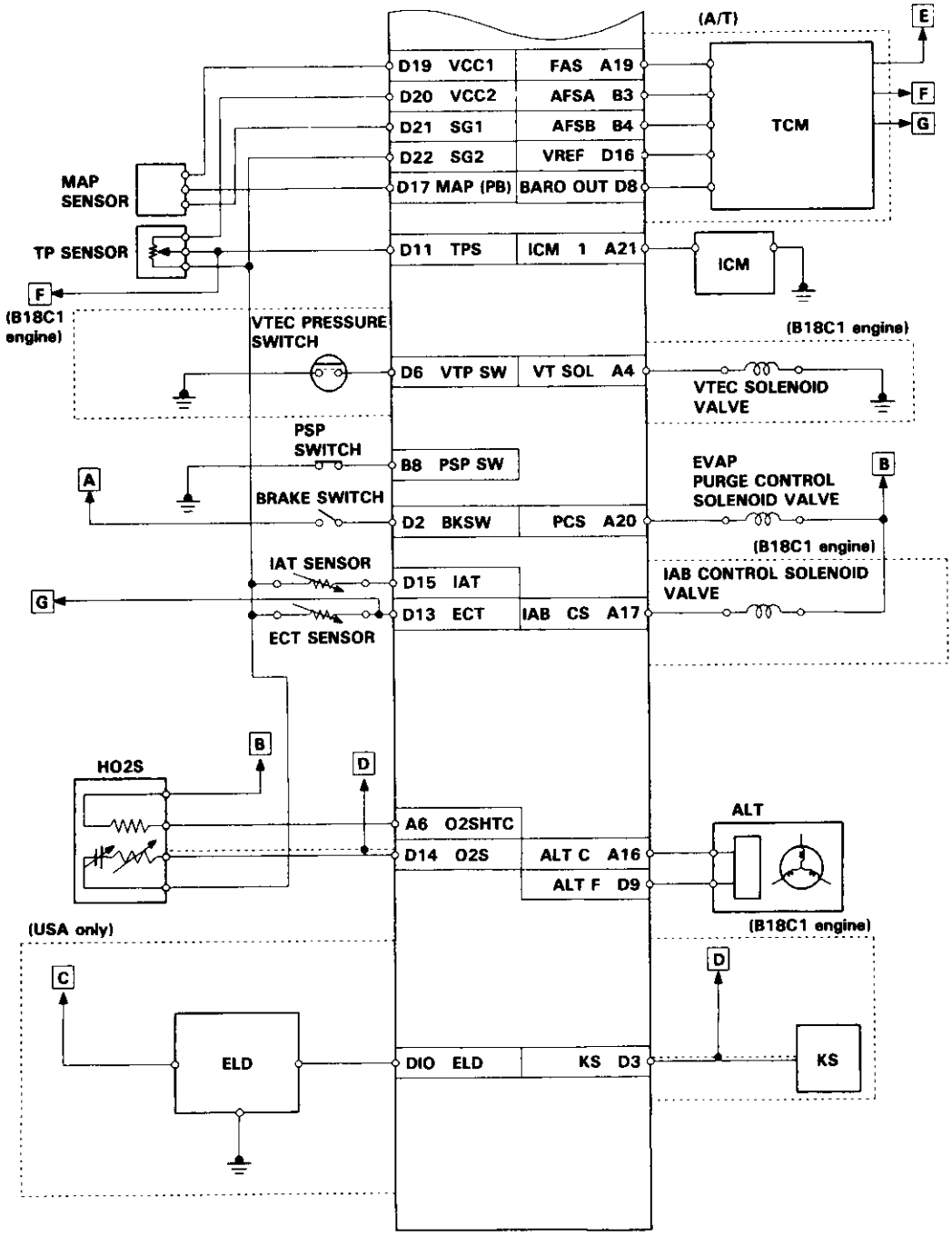

TERMINAL LOCATIONS

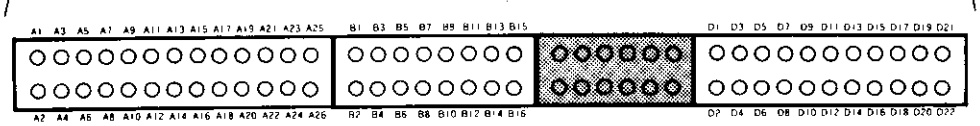

(cont'd)

Electrical Connections (cont'd)

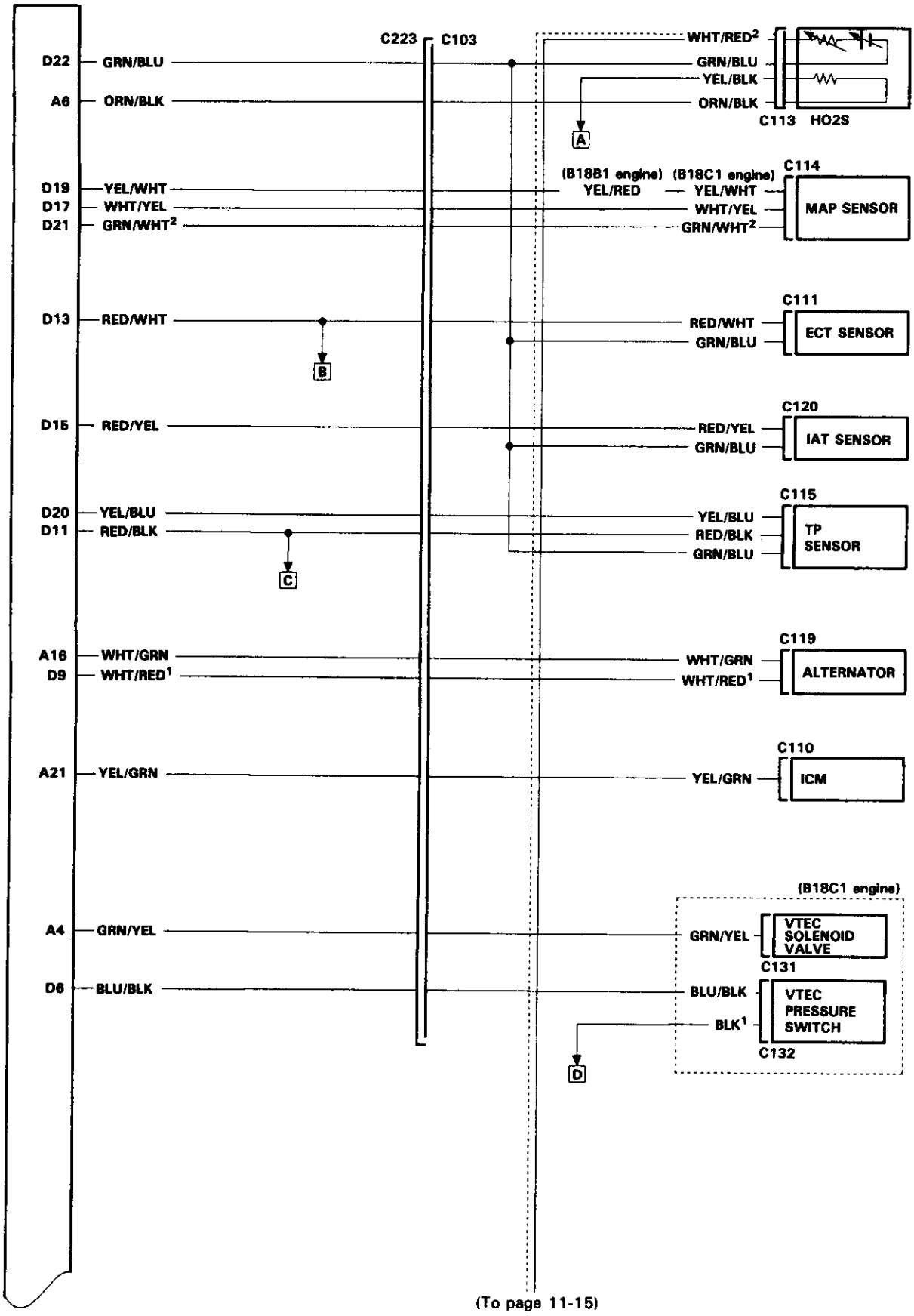

(To page 11-15)

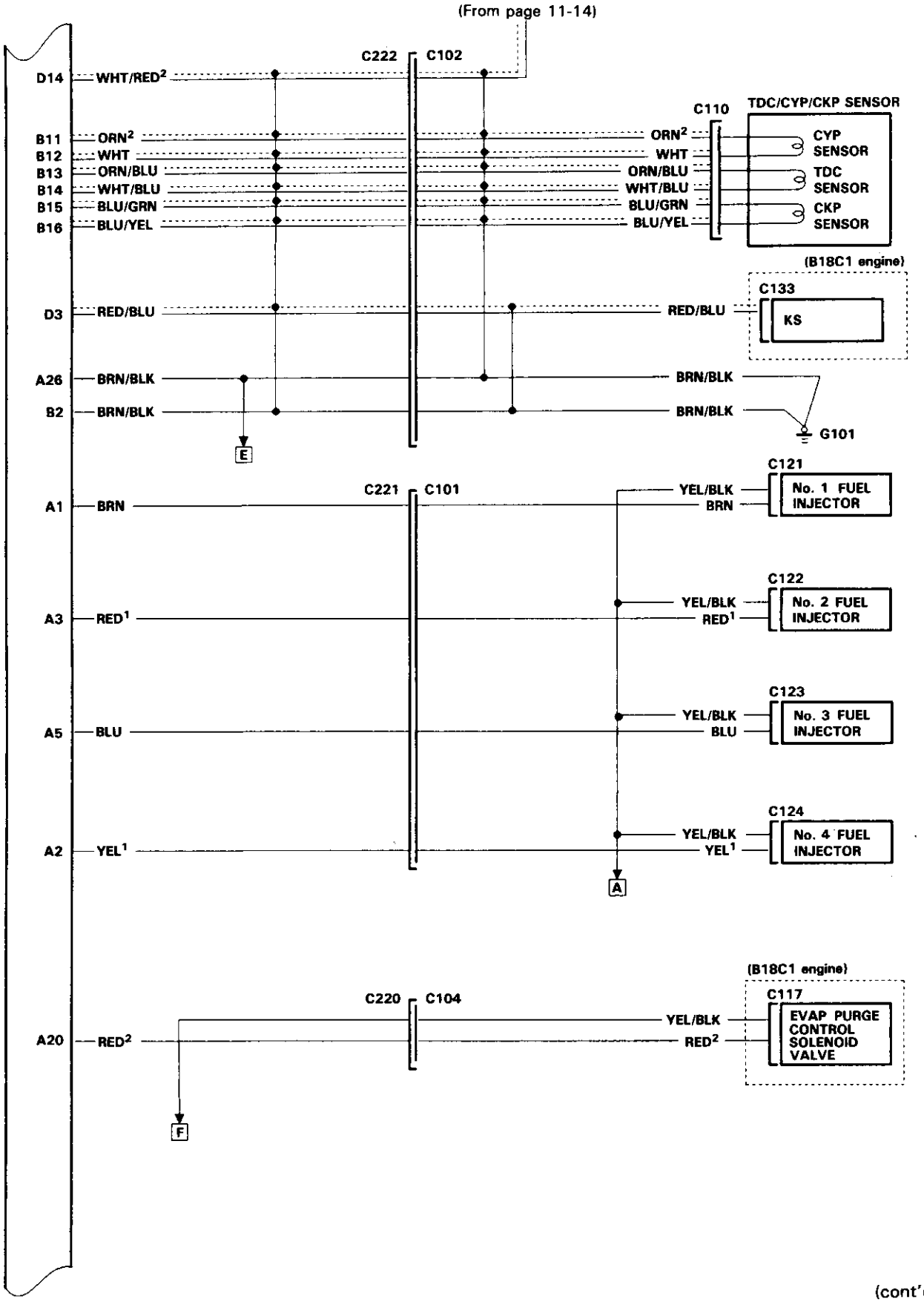
(From page 11-14)
C222
C102
D14
WHT/RED2
C110
TDC/CYP/CKP SENSOR
B11
ORN2
B12
WHT
B13
ORN/BLU
B14
WHT/BLU
B15
BLU/GRN
B16
BLU/YEL
CYP SENSOR
TDC SENSOR
CKP SENSOR
(B18C1 engine)
C133
KS
D3
RED/BLU
A26
BRN/BLK
B2
BRN/BLK
G101
E
C121
No. 1 FUEL INJECTOR
C221
C101
A1
BRN
YEL/BLK
C122
No. 2 FUEL INJECTOR
A3
RED1
C123
No. 3 FUEL INJECTOR
A5
BLU
C124
No. 4 FUEL INJECTOR
A2
YEL1
A
(B18C1 engine)
C117
EVAP PURGE CONTROL SOLENOID VALVE
C220
C104
A20
RED2
F

(cont'd)

Electrical Connections (cont'd)

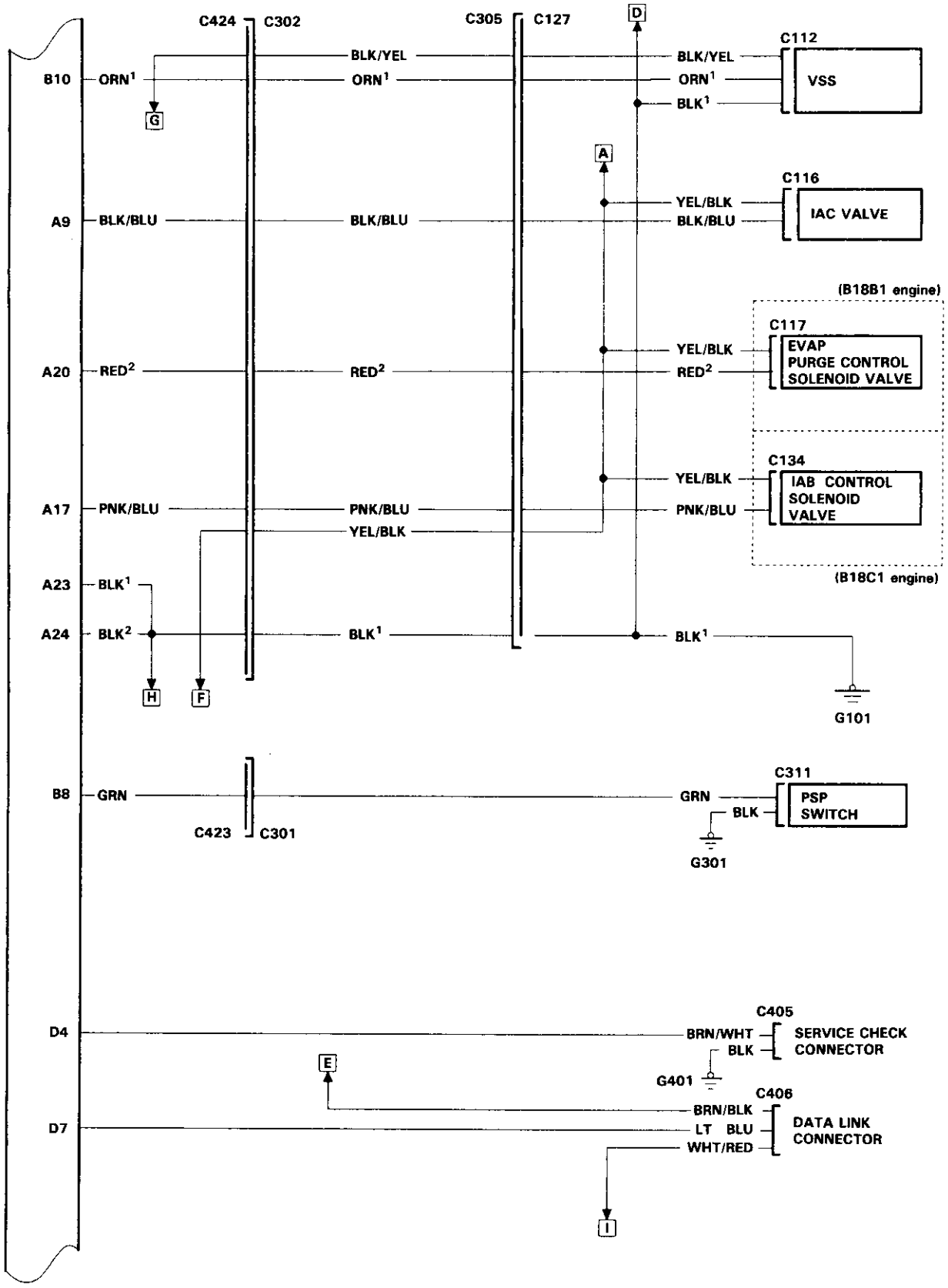

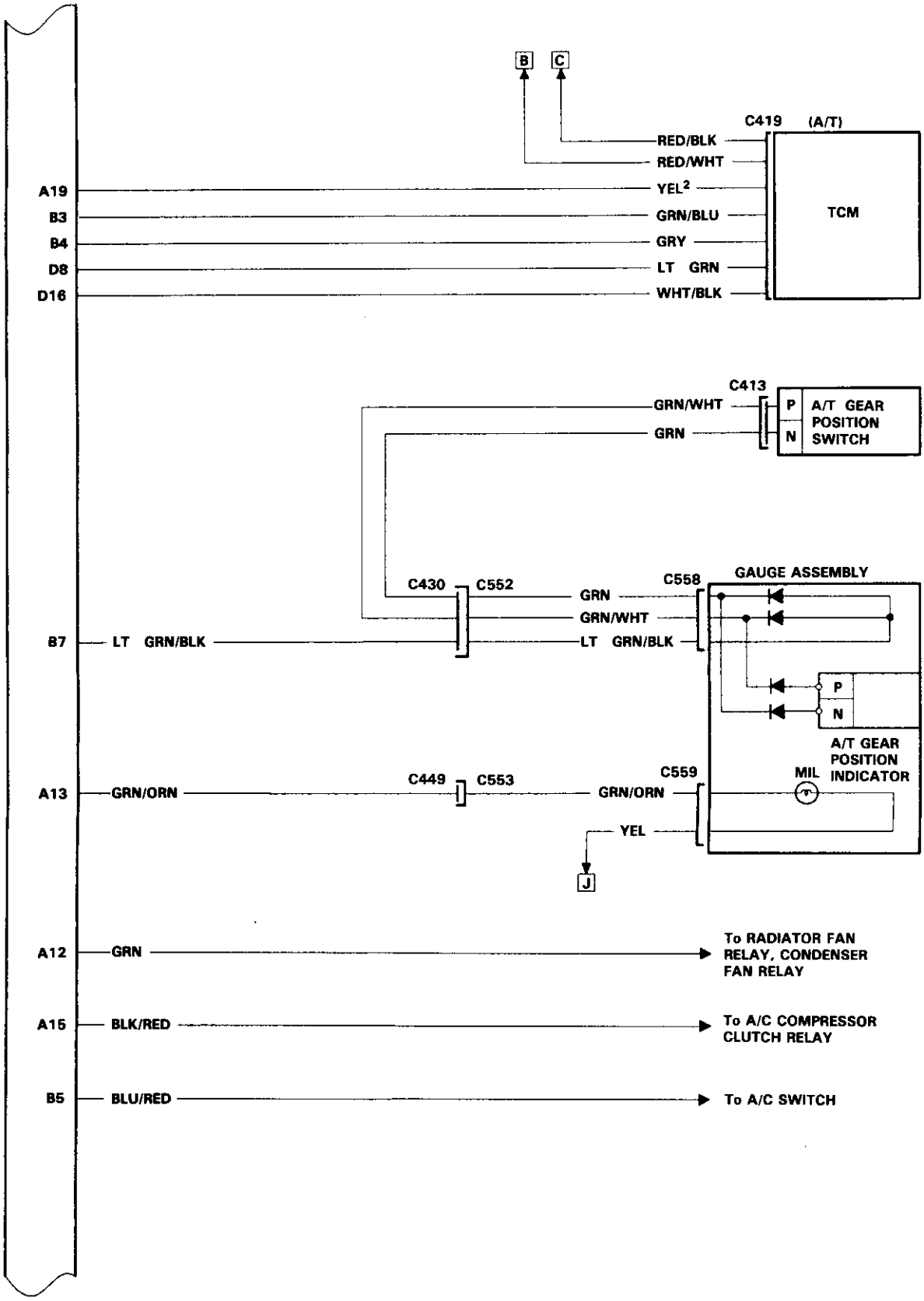
B
C
C419 (A/T)
RED/BLK
RED/WHT
A19
YEL²
B3
GRN/BLU
TCM
B4
GRY
D8
LT GRN
D16
WHT/BLK
C413
GRN/WHT
P
A/T GEAR POSITION SWITCH
GRN
N
C430
C552
C558
GAUGE ASSEMBLY
GRN
GRN/WHT
B7
LT GRN/BLK
LT GRN/BLK
P
N
A/T GEAR POSITION INDICATOR
MIL
A13
GRN/ORN
C449
C553
C559
GRN/ORN
YEL
J
A12
GRN
To RADIATOR FAN RELAY, CONDENSER FAN RELAY
A15
BLK/RED
To A/C COMPRESSOR CLUTCH RELAY
B5
BLU/RED
To A/C SWITCH

(cont'd)

Electrical Connections (cont'd)

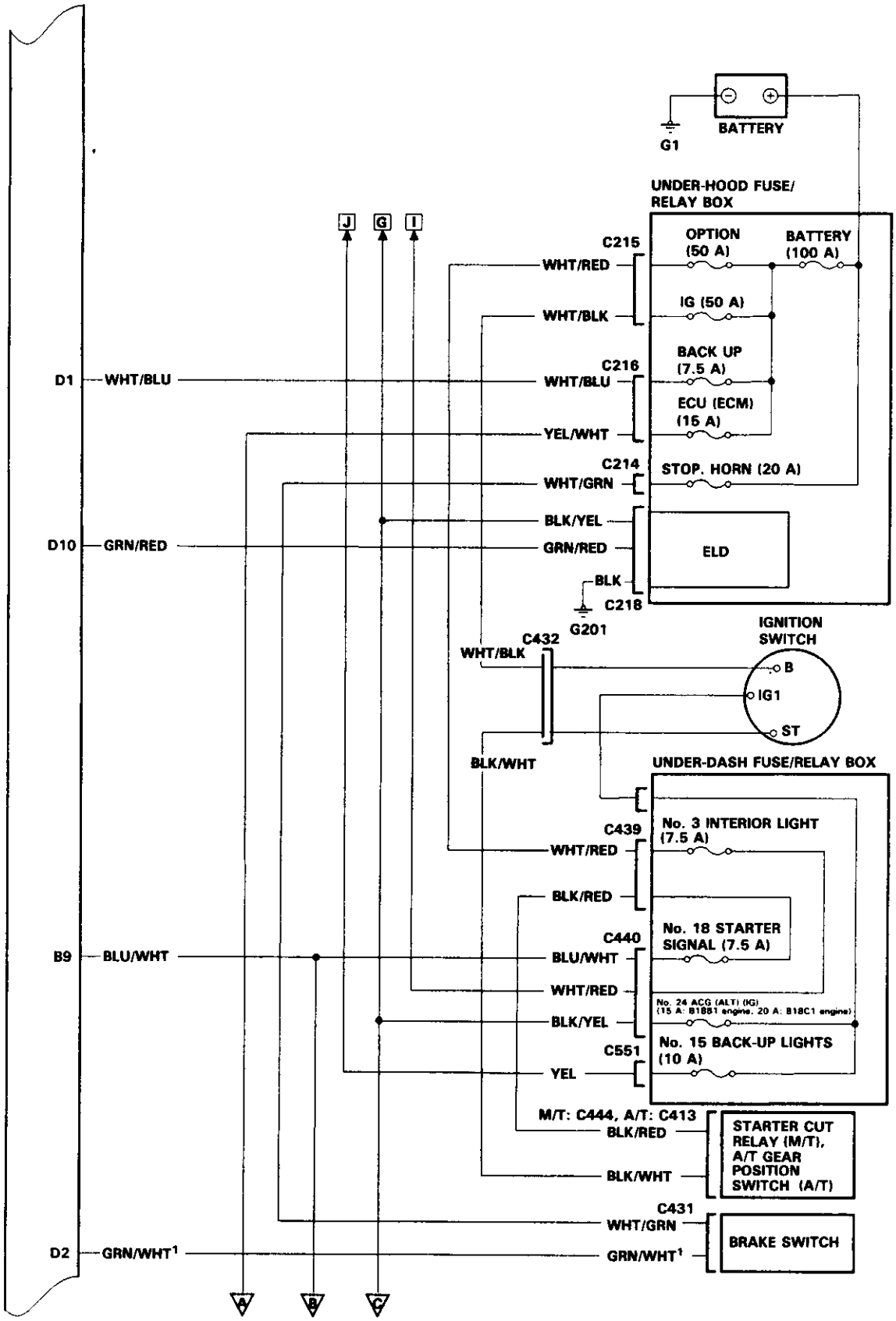

(To page 11-19)

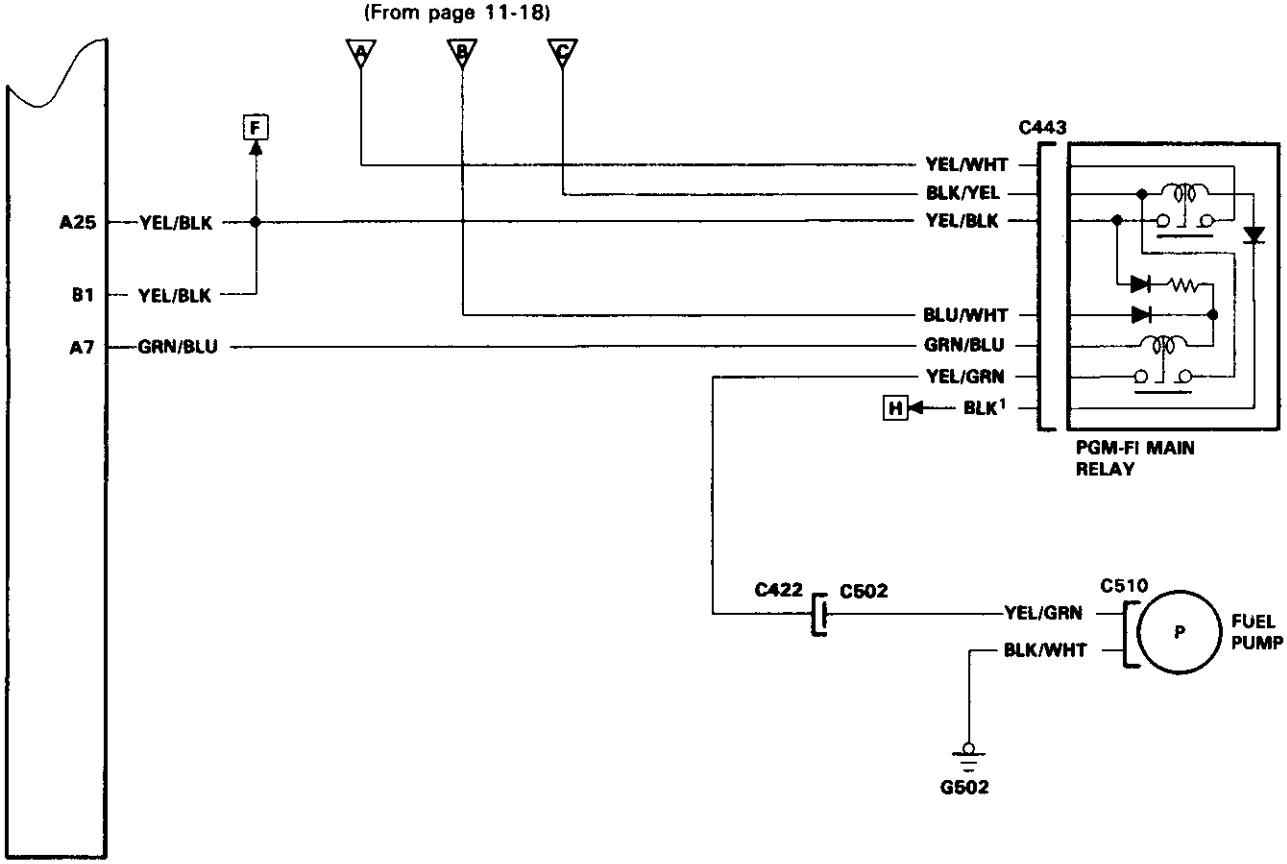
(From page 11-18)
A
B
C
F
A25
YEL/BLK
B1
YEL/BLK
A7
GRN/BLU
C443
YEL/WHT
BLK/YEL
YEL/BLK
BLU/WHT
GRN/BLU
YEL/GRN
H
BLK[1]
PGM-FI MAIN RELAY
C422
C502
C510
YEL/GRN
BLK/WHT
P
FUEL PUMP
G502

System Connectors [Engine Compartment]

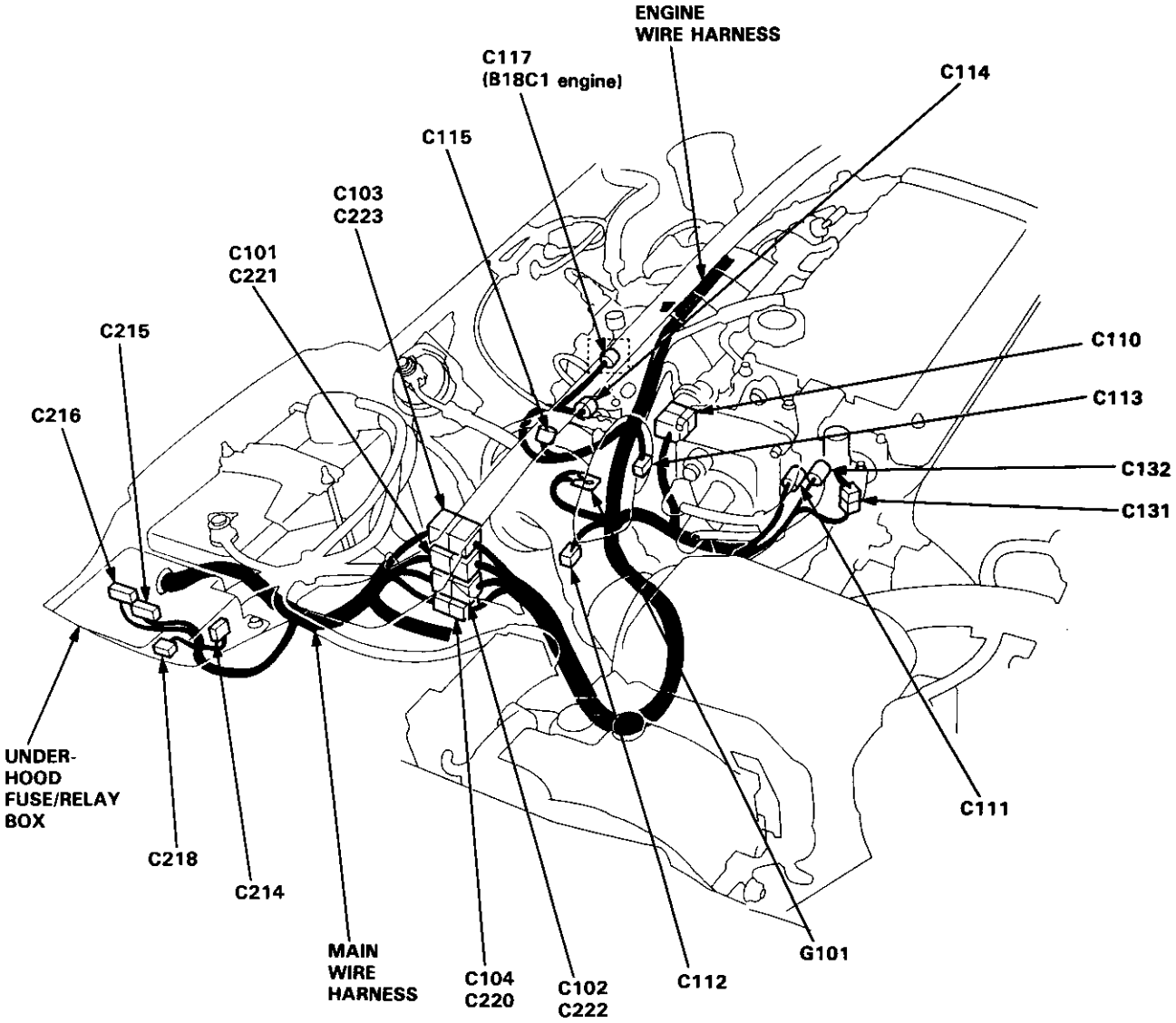

C110

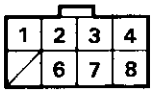

①	YEL/GRN	5	——
②	BLU/GRN	⑥	BLU/YEL
③	ORN/BLU	⑦	WHT/YEL
④	ORN[2]	⑧	WHT

C111

①	RED/WHT
②	GRN/BLU

C112

①	BLK[1]
②	BLK/YEL
③	ORN[1]

C113

①	WHT/RED[2]
②	GRN/BLU
③	YEL/BLK
④	ORN/BLK

C114

①	YEL/WHT* YEL/RED
②	GRN/WHT[2]
③	WHT/YEL

*: B18C1 engine

C115

①	GRN/BLU
②	RED/BLK
③	YEL/BLU

C117 (B18C1 engine)

①	YEL/BLK
②	RED[2]

C131

①	GRN/YEL

C132

①	BLU/BLK
②	BLK[1]

C214

①	WHT/GRN
2	WHT/GRN

C215

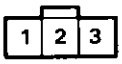

①	WHT/BLK
2	WHT
③	WHT/RED

C216

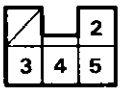

1	——
②	WHT/BLU
3	RED/GRN
4	WHT
⑤	YEL/WHT

C218

①	BLK
②	GRN/RED
③	BLK/YEL

C220

①	RED[2]
②	YEL/BLK

C221

①	RED[1]
②	BRN
③	YEL[1]
④	BLU

C222

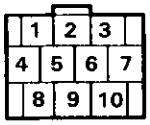

①	BRN/BLK	⑥	ORN/BLU
②	WHT/RED[2]	⑦	WHT/BLU
③	BRN/BLK	⑧	BLU/GRN
④	ORN[2]	⑨	BLU/YEL
⑤	WHT	⑩	RED/BLU

C223

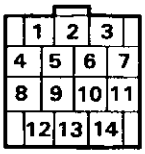

①	WHT/GRN	⑧	RED/BLK
②	ORN/BLK	⑨	GRN/BLU
③	GRN/YEL	⑩	YEL/BLU
④	GRN/WHT[2]	⑪	YEL/GRN
⑤	WHT/YEL	⑫	RED/YEL
⑥	YEL/WHT	⑬	RED/WHT
⑦	BLU/BLK	⑭	WHT/RED[1]

NOTE:
- Different wires with the same color have been given a number suffix to distinguish them (for example, YEL/BLK[1] and YEL/BLK[2] are not the same).
  ○: Related to Fuel and Emissions System.
- — Connector of male terminals: View from terminal side
  — Connector of female terminals: View from wire side

(cont'd)

System Connectors [Engine Compartment] (cont'd)

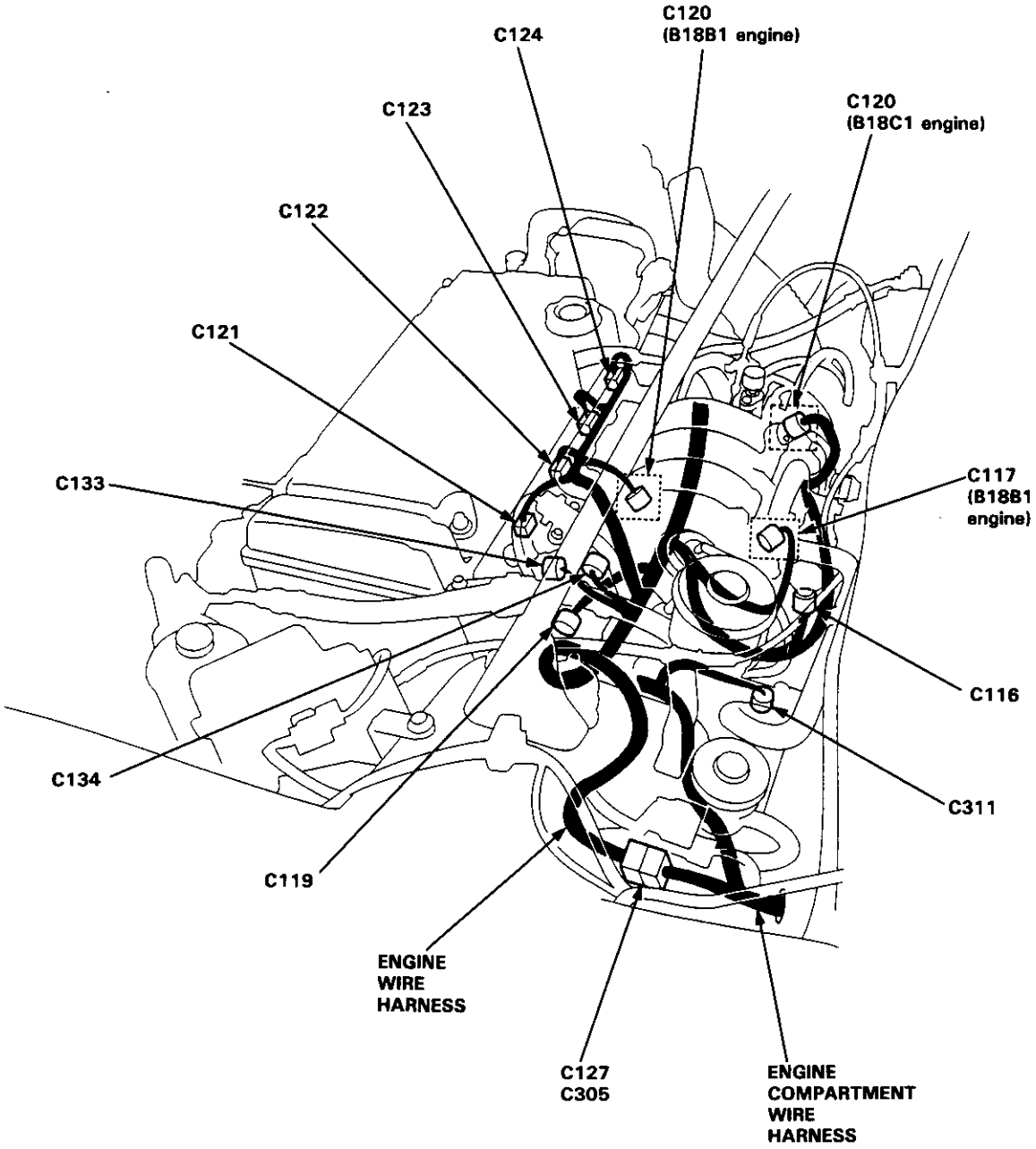

C116

①	BLK/BLU
②	YEL/BLK

C117 (B18B1 engine)

①	YEL/BLK
②	RED[2]

C119

①	WHT/GRN
②	WHT/RED[1]
3	BLK/YEL
4	WHT/BLU

C120 (B18B1 engine)

①	GRN/BLU
②	RED/YEL

C120 (B18C1 engine)

①	GRN/BLU
②	RED/YEL

C121

①	BRN
②	YEL/BLK

C122

①	RED[1]
②	YEL/BLK

C123

①	BLU
②	YEL/BLK

C124

①	YEL[1]
②	YEL/BLK

C133

①	RED/BLU
2	—

C134

①	PNK/BLU
②	YEL/BLK

C305

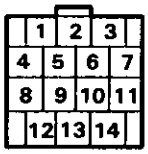

1	BLK/YEL	8	YEL/RED
2	WHT/BLU	9	GRN
③	RED[2] PNK/BLU*	⑩	BLK[1]
		11	YEL/GRN
④	BLK/BLU	⑫	YEL/BLK
⑤	BLK/YEL	13	GRN/BLK
⑥	ORN[1]	14	YEL
7	BLU		

*:B18C1 engine

C311

①	GRN
②	BLK

NOTE:
- Different wires with the same color have been given a number suffix to distinguish them (for example YEL/BLK[1] and YEL/BLK[2] are not the same).
  ○: Related to Fuel and Emissions System.
- — Connector of male terminals: View from terminal side
  — Connector of female terminals: View from wire side

System Connectors [Dash and Floor]

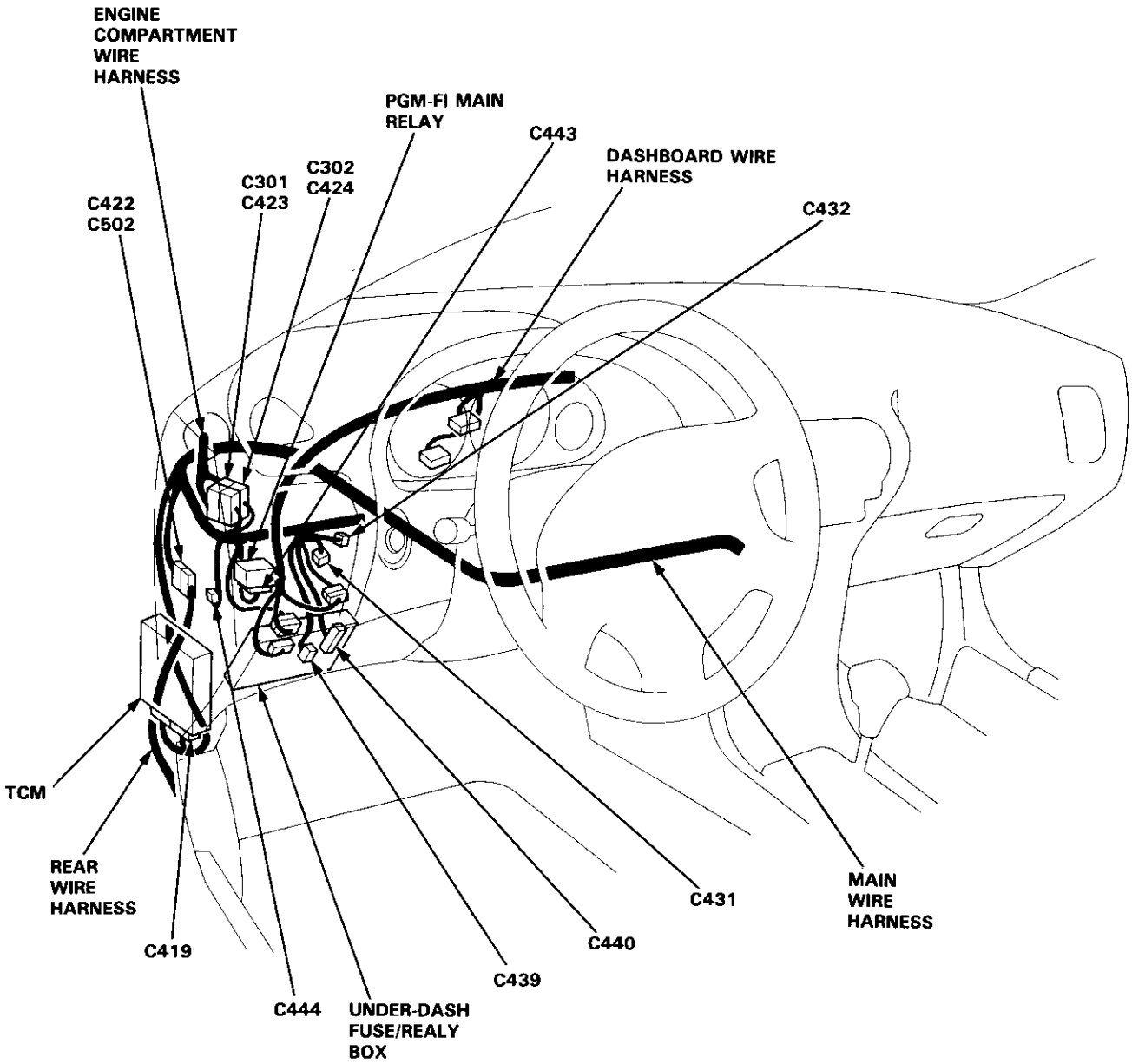

C419

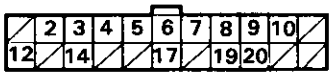

1	—	12	GRN/WHT
②	LT GRN	13	—
③	RED/WHT	14	BRN/WHT
④	RED/BLK	15	—
5	ORN	16	—
⑥	GRY	17	WHT/BLU
⑦	GRN/BLU	18	—
8	BLU/YEL	⑲	YEL[2]
9	BLU/GRN	⑳	WHT/BLK
10	ORN/BLU	21	—
11	—	22	—

C422

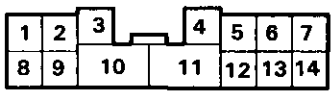

1	LT BLU	8	BLK/WHT
2	RED/BLU	9	GRN/RED
3	GRN/BLK	10	GRN/WHT
④	YEL/GRN	11	BLK/GRN
5	GRN	12	LT GRN/RED
6	LT GRN/BLK	13	GRN/BLU
7	LT GRN	14	BLK/RED

C423

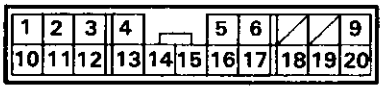

1	GRN/WHT	11	BRN/BLK
2	WHT/RED	12	BRN/RED
3	GRN/BLU*	13	GRN/BLU
4	RED/BLK	14	BRN
5	RED/YEL	15	BLU/YEL
6	RED/GRN	16	BLU/WHT
7	—	17	BLU
8	—	18	GRN/BLK
⑨	GRN	19	BLK/GRN
10	BRN/WHT	20	BLU/BLK

C424

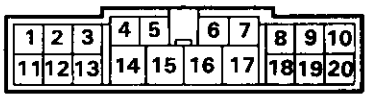

1	YEL	11	GRN/BLK
②	BLK/BLU	⑫	BLK/YEL
3	BLK/YEL	⑬	YEL/BLK
4	WHT/YEL	14	BLU
⑤	RED[2] PNK/BLU*	15	RED/GRN**
		16	BLK/YEL
6	RED/BLU**	17	BLK/RED**
7	BLU	18	GRN/RED
⑧	ORN[1]	19	GRN
9	YEL/RED	⑳	BLK[1]
10	YEL/GRN		

*: B18C1 engine
**: Canada

C431 (Without cruise control)

①	WHT/GRN
②	GRN/WHT

C431 (With cruise control)

1	LT GRN
②	WHT/GRN
③	GRN/WHT
4	GRY

C432

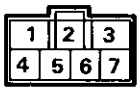

①	BLK/WHT
2	LT BLU
③	WHT/BLK
4	BLK
5	WHT/YEL
6	WHT/BLU
7	WHT/GRN

C439

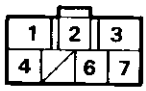

①	WHT/RED
2	WHT*
3	BLK
④	BLK/RED
5	—
6	GRN/BLK
7	RED/GRN

*: Canada

C440

1	RED/GRN	12	YEL/BLK*
2	RED/WHT	13	WHT/BLU
③	BLU/WHT	14	RED/YEL
4	RED/BLU	15	BLK/YEL
5	—	16	RED/GRN
6	GRN/ORN	17	WHT/BLU
7	GRN/YEL	18	RED/BLK
8	—	19	WHT/YEL*
⑨	BLK/YEL	20	—
10	YEL	21	GRN/RED
⑪	WHT/RED	22	GRN/BLU

*: Canada

C443

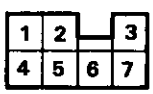

①	GRN/BLU
②	BLU/WHT
③	BLK[1]
④	YEL/GRN
⑤	BLK/YEL
⑥	YEL/BLK
⑦	YEL/WHT

C444

①	BLK/WHT
2	BLK/WHT
③	BLK/RED
4	BLU/BLK

NOTE: ● Different wires with the same color have been given a number suffix to distinguish them (for example YEL/BLK[1] and YEL/BLK[2] are not the same).
○: Related to Fuel and Emissions System.
● — Connector of male terminals: View from terminal side
— Connector of female terminals: View from wire side

(cont'd)

System Connectors [Dash and Floor] (cont'd)

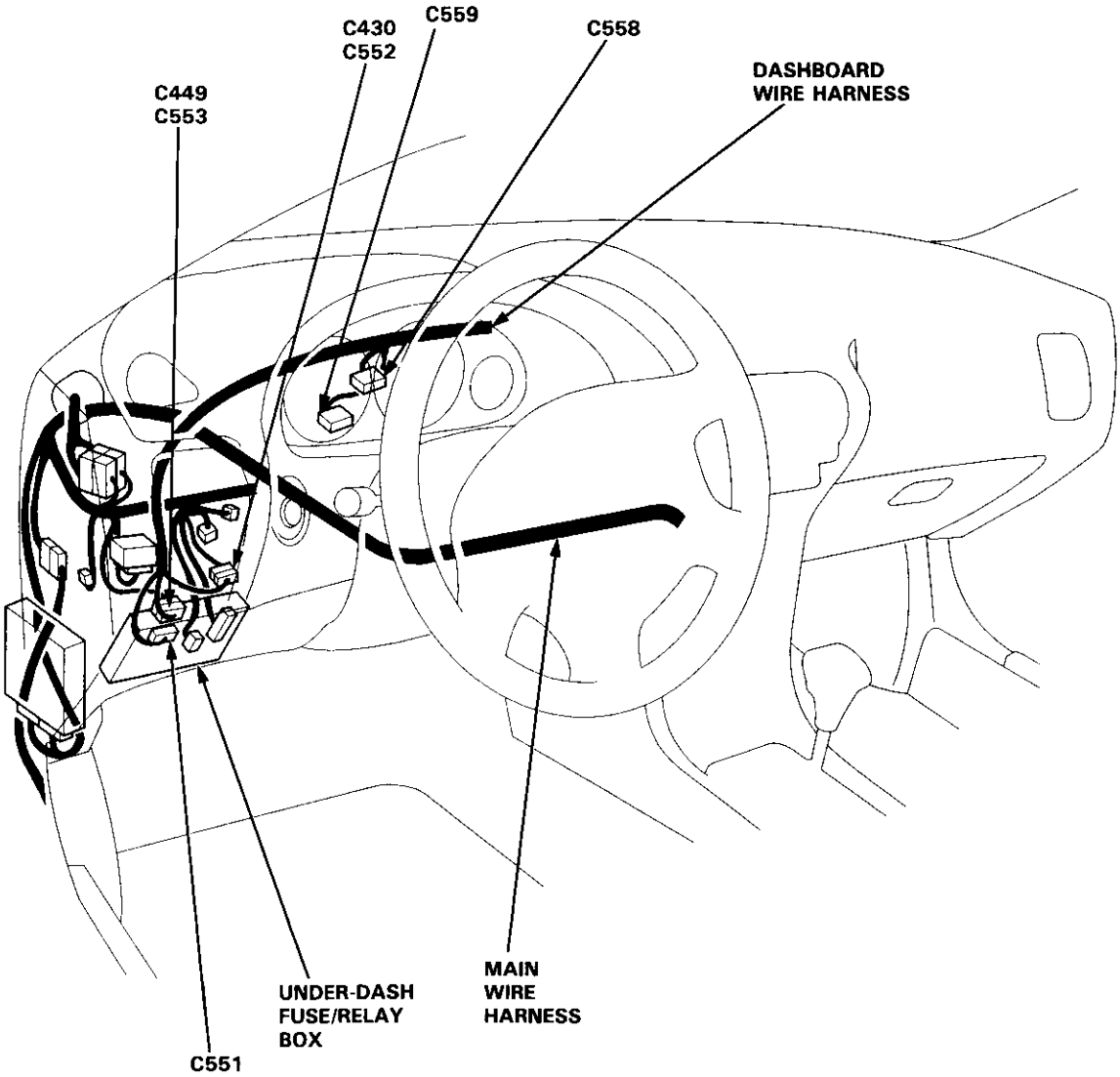

C551

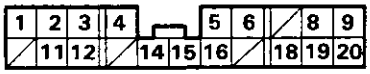

1	BLK/YEL	11	BLK/YEL
2	BLK	12	WHT/BLU
3	BLK	13	—
4	GRN/YEL	⑭	YEL
5	GRN/RED	15	RED/GRN
6	GRN/WHT	16	YEL/RED
7	—	17	—
8	GRN/BLU	18	ORN
9	GRN/ORN	19	RED/BLK
10	—	20	WHT/BLU

C552

1	YEL/WHT	6	GRN/RED
2	LT GRN/WHT	⑦	GRN/WHT
③	GRN	8	GRN/BLK
④	LT GRN/BLK	9	GRN/BLU
5	—	10	GRN/YEL

C553

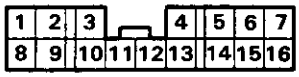

1	RED/BLU	9	RED/GRN
2	LT GRN	10	BRN/BLK
3	BLU	11	WHT/GRN
4	ORN	12	BLU/YEL
5	YEL/RED	13	RED
6	YEL/GRN	⑯	GRN/ORN
7	YEL	15	BLU
8	YEL/BLK	16	BLU/RED

C558

1	YEL/WHT	⑥	GRN
2	—	7	GRN/BLU
③	LT GRN/BLK	8	GRN/YEL
④	GRN/WHT	9	LT GRN/WHT
5	GRN/RED	10	GRN/BLK

C559

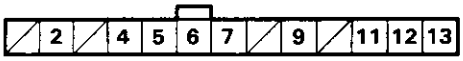

1	—	8	—
2	PNK	9	WHT/BLU
3	—	10	—
④	YEL	11	YEL/RED
5	RED/BLU	⑫	GRN/ORN
6	BLK	13	BLU
7	YEL/GRN		

NOTE:
- Different wires with the same color have been given a number suffix to distinguish them (for example YEL/BLK[1] and YEL/BLK[2] are not the same).
  ○: Related to Fuel and Emissions System.
- — Connector of male terminals: View from terminal side
  — Connector of female terminals: View from wire side

(cont'd)

System Connectors [Dash and Floor] (cont'd)

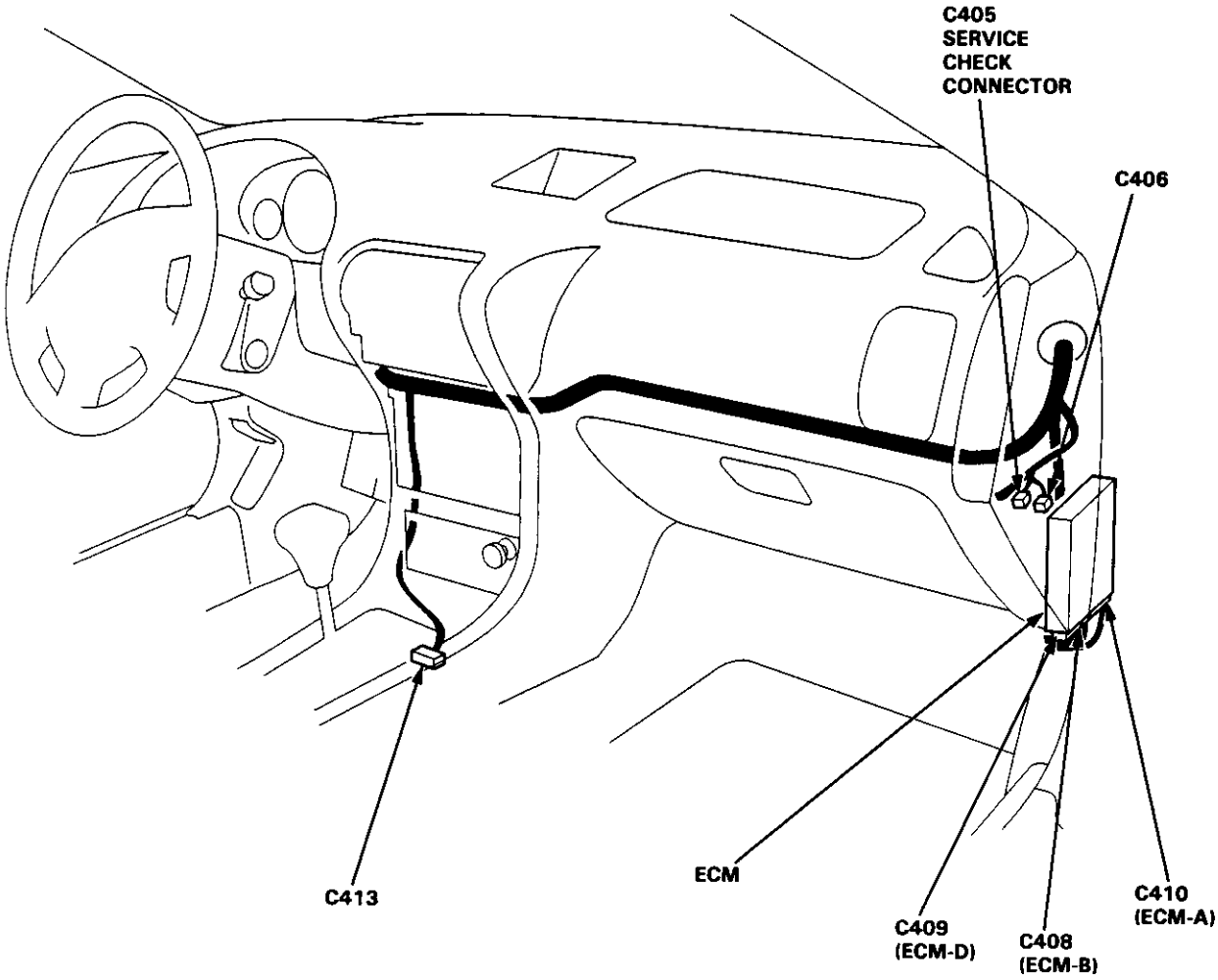

C405

①	BRN/WHT
②	BLK

C406

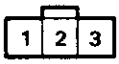

①	BRN/BLK
②	WHT/RED
③	LT BLU

C410 (ECM-A)

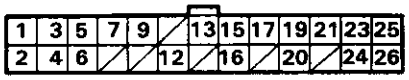

①	BRN	14	——
②	YEL[1]	⑮	BLK/RED
③	RED[1]	⑯	WHT/GRN
④	GRN/YEL*	⑰	PNK/BLU*
⑤	BLU	18	——
⑥	ORN/BLK	⑲	YEL[2]**
⑦	GRN/BLU	⑳	RED[2]
8	——	㉑	YEL/GRN
⑨	BLK/BLU	22	——
10	——	㉓	BLK[1]
11	——	㉔	BLK[2]
⑫	GRN	㉕	YEL/BLK
⑬	GRN/ORN	㉖	BRN/BLK

*: B18C1 engine
**: B18B1 engine

C408 (ECM-B)

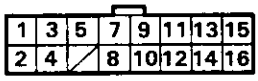

①	YEL/BLK	⑨	BLU/WHT
②	BRN/BLK	⑩	ORN[1]
③	GRN/BLU**	⑪	ORN[2]
④	GRY**	⑫	WHT
⑤	BLU/RED	⑬	ORN/BLU
6	——	⑭	WHT/BLU
⑦	LT GRN/BLK**	⑮	BLU/GRN
⑧	GRN	⑯	BLU/YEL

**: B18B1 engine

C409 (ECM-D)

①	WHT/BLU	12	——
②	GRN/WHT[1]	⑬	RED/WHT
③	RED/BLU*	⑭	WHT/RED[2]
④	BRN/WHT	⑮	RED/YEL
5	——	⑯	WHT/BLK**
⑥	BLU/BLK*	⑰	WHT/YEL
⑦	LT BLU	18	——
⑧	LT GRN**	⑲	YEL/WHT
⑨	WHT/RED[1]	⑳	YEL/BLU
⑩	GRN/RED	㉑	GRN/WHT[2]
⑪	RED/BLK	㉒	GRN/BLU

*: B18C1 engine
**: B18B1 engine

C413

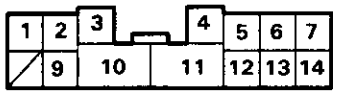

1	BLK	8	——
2	LT GRN/WHT	9	PNK
3	YEL	⑩	BLK/WHT
4	GRN/BLK	⑪	BLK/RED
5	GRN/YEL	⑫	GRN/WHT
6	GRN/BLU	13	GRN/RED
7	PNK/GRN	⑭	GRN

NOTE:
- Different wires with the same color have been given a number suffix to distinguish them (for example YEL/BLK[1] and YEL/BLK[2] are not the same).
  ○: Related to Fuel and Emissions System.
- — Connector of male terminals: View from terminal side
  — Connector of female terminals: View from wire side

System Connectors [Fuel Pump]

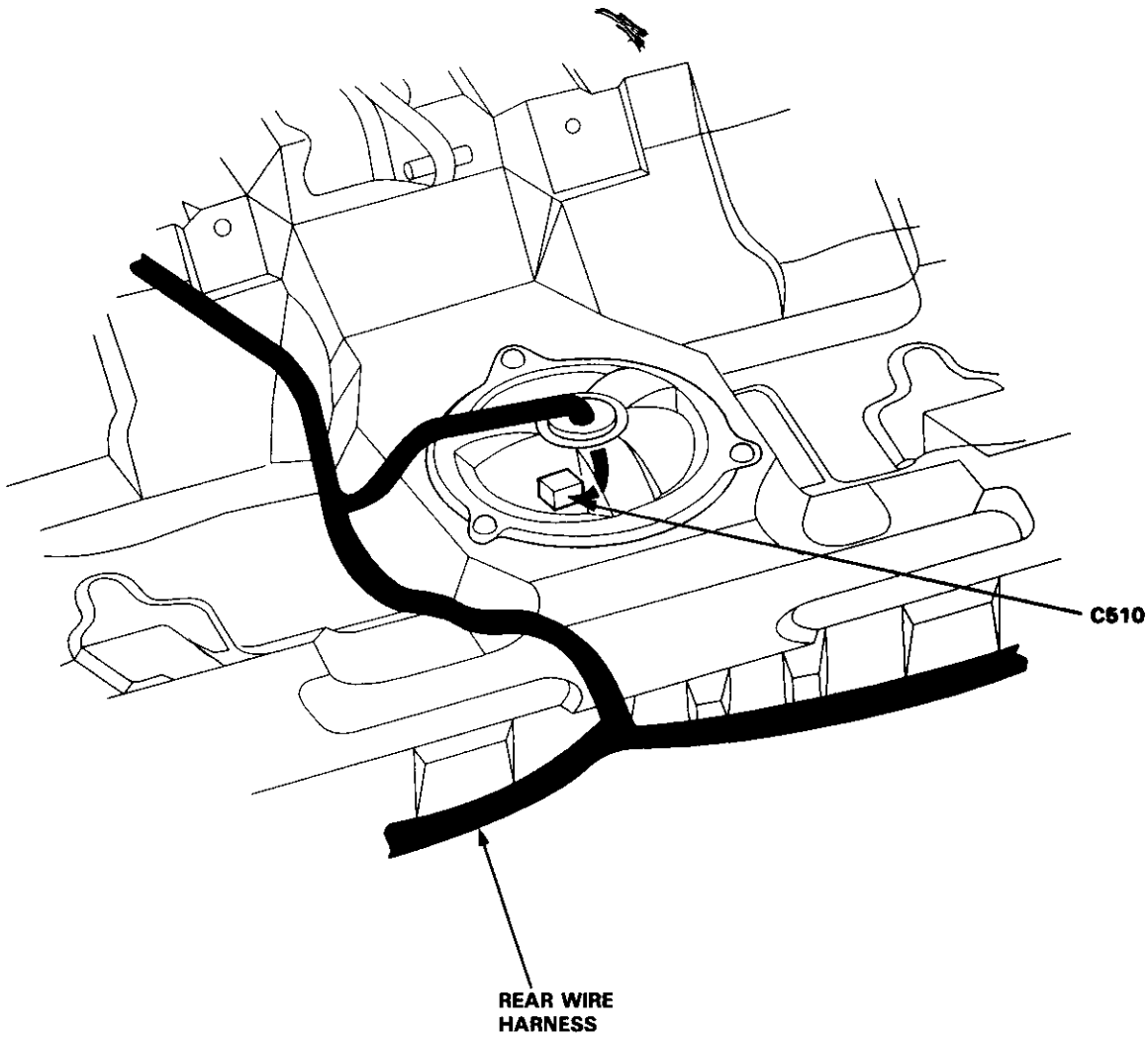

C510

①	BLK/WHT
②	YEL/GRN

NOTE:
- Different wires with the same color have been given a number suffix to distinguish them (for example YEL/BLK[1] and YEL/BLK[2] are not the same).
  O: Related to Fuel and Emissions System.
- — Connector of male terminals: View from terminal side
  — Connector of female terminals: View from wire side

Troubleshooting

Troubleshooting Guide

NOTE: Across each row in the chart, the systems that could be sources of a symptom are ranked in the order they should be inspected starting with ①. Find the symptom in the left column, read across to the most likely source, then refer to the page listed at the top of that column. If inspection shows the system is OK, try the next most likely system ②, etc.

PAGE / SYSTEM		PGM-FI									
		ENGINE CONTROL MODULE	HEATED OXYGEN SENSOR	MANIFOLD ABSOLUTE PRESSURE SENSOR	TOP DEAD CENTER/ CRANKSHAFT POSITION/ CYLINDER POSITION SENSOR	ENGINE COOLANT TEMPERA-TURE SENSOR	THROTTLE POSITION SENSOR	INTAKE AIR TEMPERA-TURE SENSOR	BARO-METRIC PRESSURE SENSOR	IGNITION OUTPUT SIGNAL	VEHICLE SPEED SENSOR
SYMPTOM		11-42	46, 47, 50	11-52	11-56	11-58	11-60	11-62	11-64	11-66	11-68
MALFUNCTION INDICATOR LAMP (MIL)** TURNS ON		or									
MALFUNCTION INDICATOR LAMP (MIL)** BLINKS		or	or or	3	or or	6	7	10	13	15	17
ENGINE WON'T START		①			③					③	
DIFFICULT TO START ENGINE WHEN COLD		(BU)		③	③	①					
IRREGULAR IDLING	WHEN COLD FAST IDLE OUT OF SPEC	(BU)				③					
	ROUGH IDLE	(BU)		③							
	WHEN WARM RPM TOO HIGH	(BU)				③					
	WHEN WARM RPM TOO LOW	(BU)									
FREQUENT STALLING	WHILE WARMING UP	(BU)				③					
	AFTER WARMING UP	(BU)									
POOR PERFORM-ANCE	MISFIRE OR ROUGH RUNNING	(BU)		②	③						
	FAILS EMISSION TEST	(BU)	③	②							
	LOSS OF POWER	(BU)		③			②				

* If codes other then those listed above are indicated, count the number of blinks again. If the MIL is in fact blinking these codes, replace the ECM.

(BU) If the MIL is on while the engine is running, connect the SCS short connector to the service check connector. If no code is displayed (MIL stays on steady), the back-up system is in operation.
Substitute a known-good ECM and recheck. If the indication goes away, replace the original ECM.

** USA:
MALFUNCTION INDICATOR LAMP (MIL)

CANADA:
CHECK ENGINE LIGHT

***: B18C1 engine

PGM-FI						IDLE CONTROL		FUEL SUPPLY			
ELECTRICAL LOAD DETECTOR	VARIABLE VALVE TIMING & VALVE LIFT ELECTRONIC CONTROL SOLENOID VALVE***	VARIABLE VALVE TIMING & VALVE LIFT ELECTRONIC CONTROL PRESSURE SWITCH***	KNOCK SENSOR ***	A/T FI SIGNAL A	A/T FI SIGNAL B	IDLE AIR CONTROL VALVE	OTHER IDLE CONTROLS	FUEL INJECTOR	OTHER FUEL SUPPLY	INTAKE AIR	EMISSION CONTROLS
11-70	6-36	6-38	11-74	11-76	11-76	11-82	11-78	11-102	11-97	11-115	11-129
20	21	22	23	30	31	14		16			
									②		
									②		
						①	②				
						①	②	②			
						①	②				
③						①	②	②			
						①	②		③		
						②			①		
								①			
											①
	③	③						③	①	③	

Self-diagnostic Procedures

I. When the Malfunction Indicator Lamp (MIL) has been reported on, do the following:

1. Connect the SCS short connector to Service Check Connector as shown. (The 2P Service Check Connector is located under the dash on the passenger side of the car.) Turn the ignition switch on.

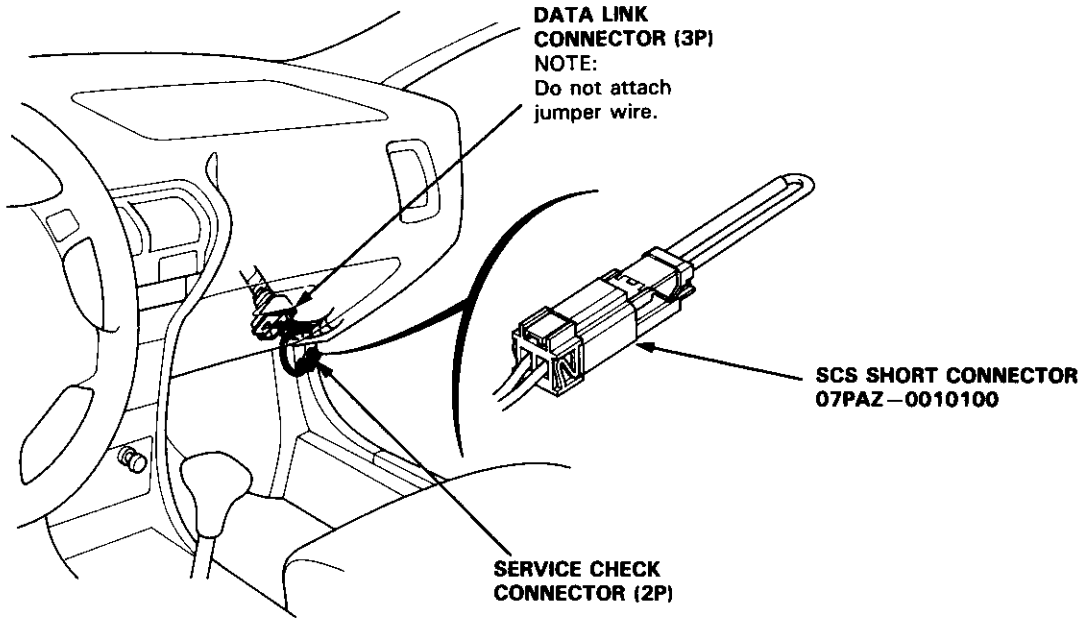

2. Note the Diagnostic Trouble Code (DTC): The MIL indicates a code by the length and number of blinks. The MIL can indicate multiple component problems by blinking separate codes, one after another. Codes 1 through 9 are indicated by individual short blinks. Codes 10 through 43 are indicated by a series of long and short blinks. The number of long blinks equals the first digit, the number of short blinks equals the second digit. Sometimes the first blink is difficult to see; always count the blinks at least twice to verify the code.

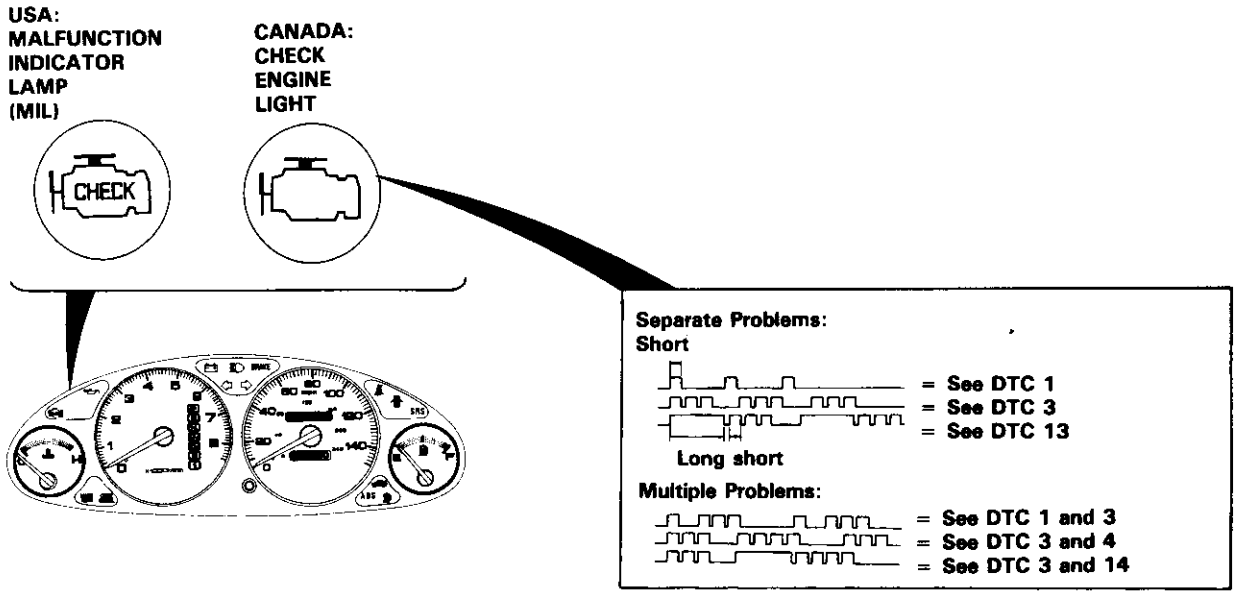

II. Engine Control Module (ECM) Reset Procedure

1. Turn the ignition switch off.

2. Remove the BACK UP (7.5 A) fuse from the under-hood fuse/relay box for 10 seconds to reset the ECM.

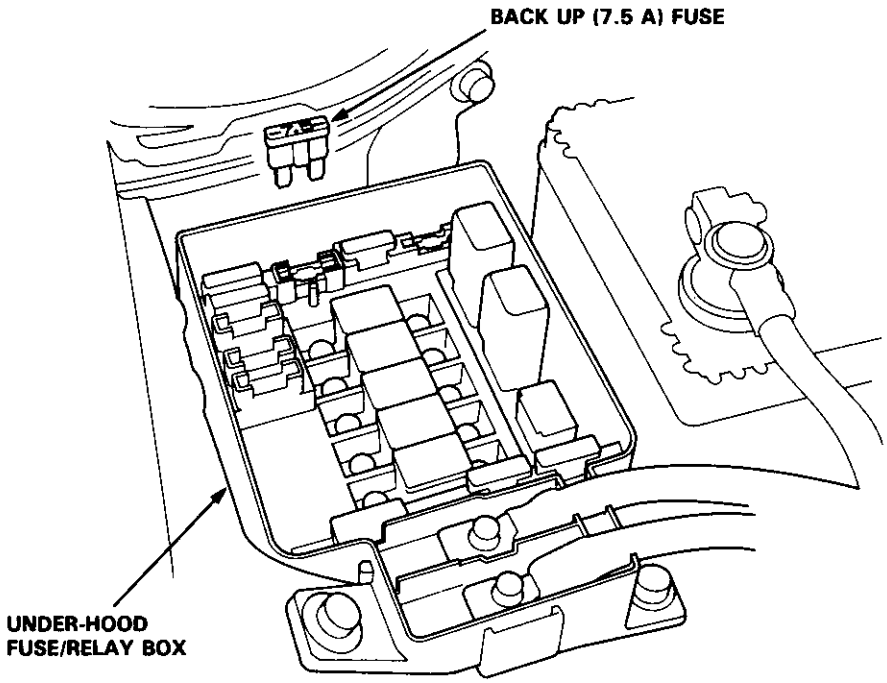

III. Final Procedure (this procedure must be done after any troubleshooting)

1. Remove the SCS Short Connector.

   NOTE: If the SCS short connector is connected and there are no DTCs stored in the ECM, the MIL will stay on.

2. Do the ECM Reset Procedure.

(cont'd)

Self-diagnostic Procedures (cont'd)

DIAGNOSTIC TROUBLE CODE (DTC)	SYSTEM INDICATED	Page
0	ENGINE CONTROL MODULE (ECM)	11-42
1	HEATED OXYGEN SENSOR (HO2S)	11-46
3	MANIFOLD ABSOLUTE PRESSURE (MAP SENSOR)	11-52
4	CRANKSHAFT POSITION (CKP SENSOR)	11-56
6	ENGINE COOLANT TEMPERATURE (ECT SENSOR)	11-58
7	THROTTLE POSITION (TP SENSOR)	11-60
8	TOP DEAD CENTER POSITION (TDC SENSOR)	11-56
9	No. 1 CYLINDER POSITION (CYP SENSOR)	11-56
10	INTAKE AIR TEMPERATURE (IAT SENSOR)	11-62
13	BAROMETRIC PRESSURE (BARO SENSOR)	11-64
14	IDLE AIR CONTROL (IAC VALVE)	11-82
15	IGNITION OUTPUT SIGNAL	11-66
16	FUEL INJECTOR	11-102
17	VEHICLE SPEED SENSOR (VSS)	11-68
20	ELECTRICAL LOAD DETECTOR (ELD)	11-70
21	VARIABLE VALVE TIMING & VALVE LIFT ELECTRONIC CONTROL SOLENOID VALVE (VTEC SOLENOID VALVE)*	6-36
22	VARIABLE VALVE TIMING & VALVE LIFT ELECTRONIC CONTROL PRESSURE SWITCH (VTEC PRESSURE SWITCH)*	6-38
23	KNOCK SENSOR (KS)*	11-74
30	A/T FI SIGNAL A	11-76
31	A/T FI SIGNAL B	11-76
41	HEATED OXYGEN SENSOR (HO2S) HEATER	11-47
43	FUEL SUPPLY SYSTEM	11-50

*: B18C1 engine

- If codes other than those listed above are indicated, verify the code. If the code indicated is not listed above, replace the ECM.
- The MIL may come on, indicating a system problem when, in fact, there is a poor or intermittent electrical connection. First, check the electrical connections, clean or repair connections if necessary.
- The MIL and [D4] indicator light may light simultaneously when the Diagnostic Trouble Code (DTC) 6, 7 or 17. Check the PGM-FI system according to the PGM-FI system troubleshooting, then recheck the [D4] indicator light. If it lights, see page 14-50, 51.
- The MIL does not come on when there is a malfunction in the A/T FI signal or Electrical Load Detector (ELD) circuits. However, it will indicate the codes when the Service Check Connector is shorted.

If the inspection for a particular code requires the test harness, remove the right door sill molding and kick panel. Pull the carpet back to expose the ECM. Unbolt the ECM cover. Turn the ignition switch off and connect the test harness. Check the system according to the procedure described for the appropriate code(s) listed on the following pages.

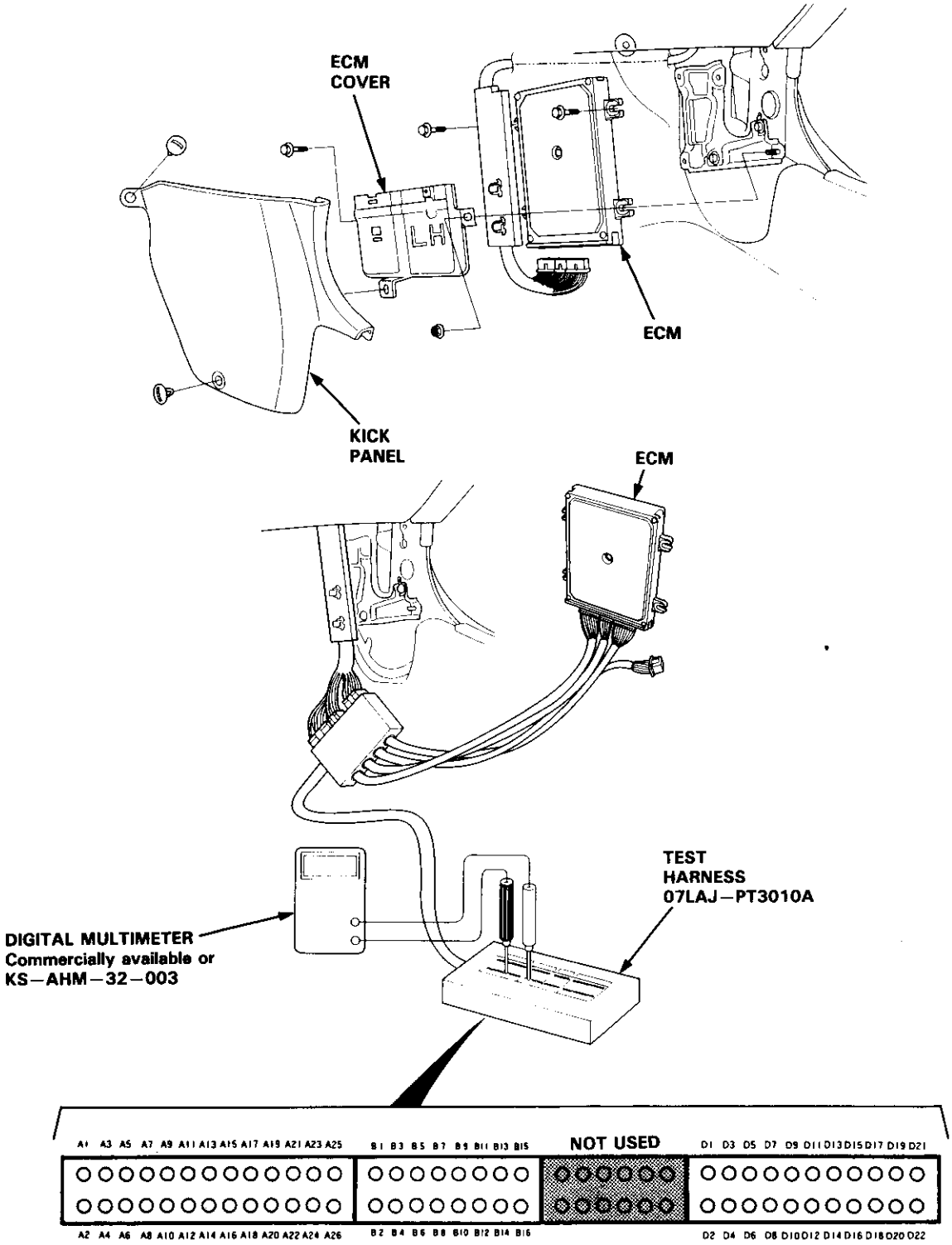

TERMINAL LOCATIONS

(cont'd)

Self-diagnostic Procedures (cont'd)

CAUTION:

- **Puncturing the insulation on a wire can cause poor or intermittent electrical connections.**
- **For testing at connectors other than the test harness, bring the tester probe into contact with the terminal from the connector side of wire harness connectors in the engine compartment. For female connectors, just touch lightly with the tester probe and do not insert the probe.**

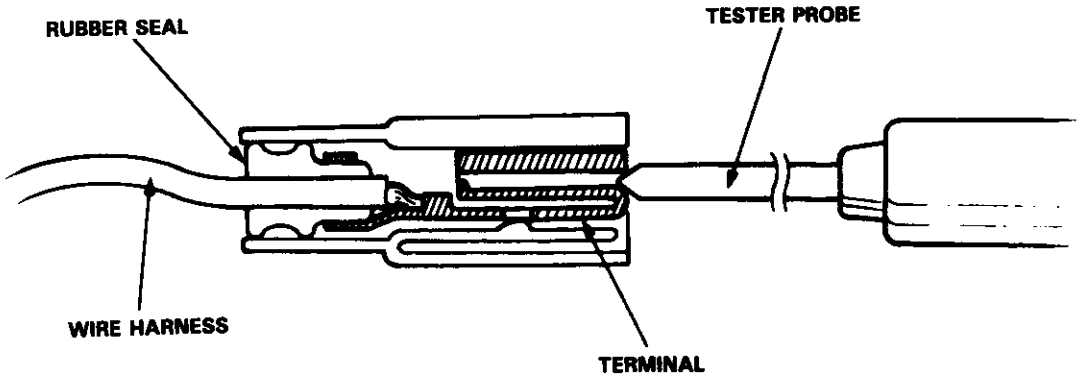

How to Read Flowcharts

A flowchart is designed to be used from start to final repair. It's like a map showing you the shortest distance. But beware: if you go off the "map" anywhere but a "stop" symbol, you can easily get lost.

START (bold type)	Describes the conditions or situation to start a troubleshooting flowchart.
ACTION	Asks you to do something; perform a test, set up a condition etc.
DECISION	Asks you about the result of an action, then sends you in the appropriate troubleshooting direction.
STOP (bold type)	The end of a series of actions and decisions, describes a final repair action and sometimes directs you to an earlier part of the flowchart to confirm your repair.

NOTE:

- The term "Intermittent Failure" is used in these charts. It simply means a system may have had a failure, but it checks out OK at this time. If the Malfunction Indicator Lamp (MIL) on the dash does not come on, check for poor connections or loose wires at all connectors related to the circuit that you are troubleshooting (see illustration below).
- Most of the troubleshooting flowcharts have you reset the Engine Control Module (ECM) and try to duplicate the Diagnostic Trouble Code (DTC). If the problem is intermittent and you can't duplicate the code, do not continue through the flowchart. To do so will only result in confusion and, possibly, a needlessly replaced ECM.
- "Open" and "Short" are common electrical terms. An open is a break in a wire or at a connection. A short is an accidental connection of a wire to ground or to another wire. In simple electronics, this usually means something won't work at all. In complex electronics (like ECM's), this can sometimes mean something works, but not the way it's supposed to.
- If the electrical readings are not as specified when using the test harness, check the test harness connections before proceeding.

TIGHT

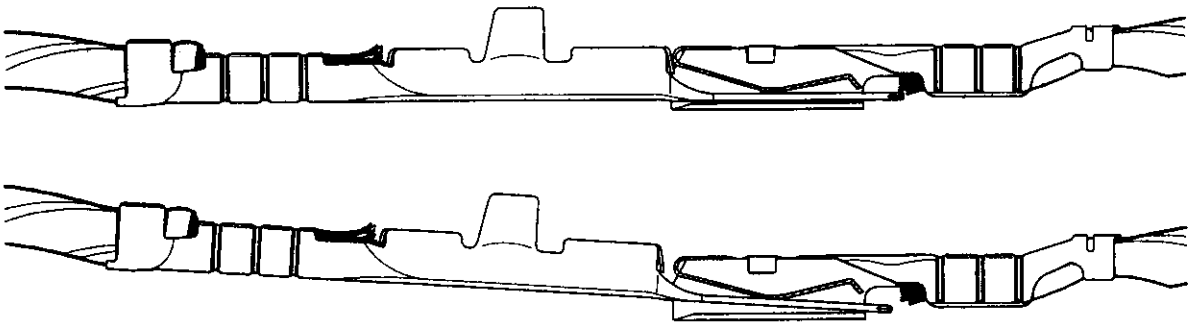

LOOSE

PGM-FI System

System Description

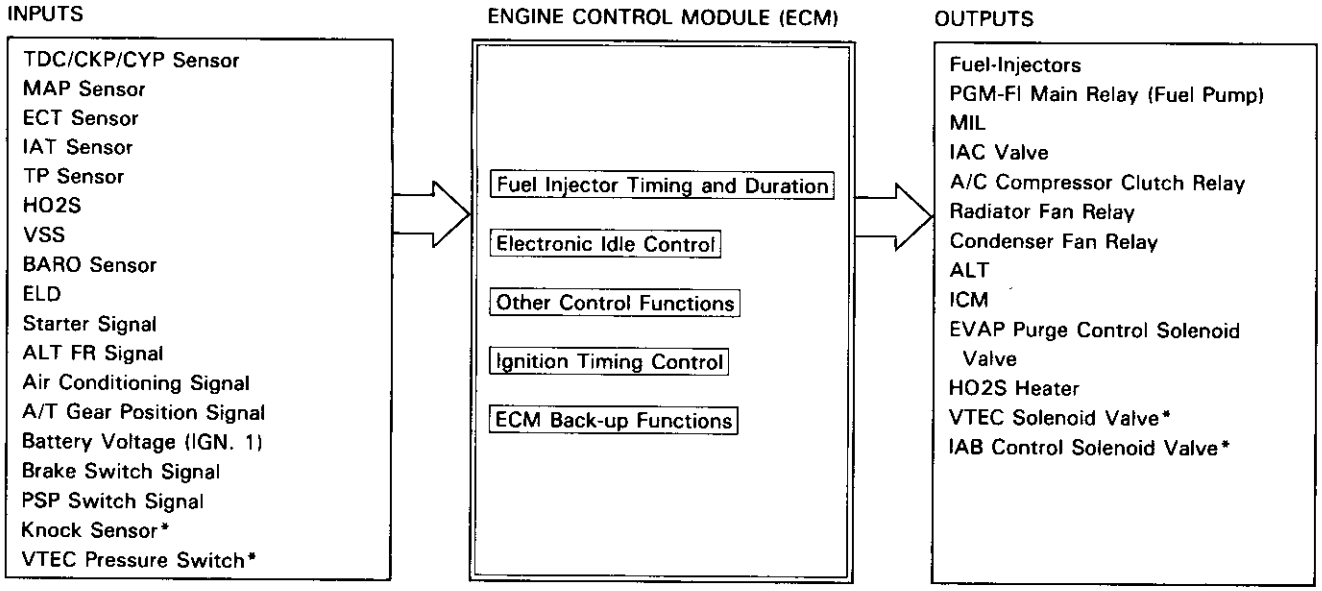

*: B18C1 engine

PGM-FI System
The PGM-FI system on this model is a sequential multiport fuel injection system.

Fuel Injector Timing and Duration
The ECM contains memories for the basic discharge durations at various engine speeds and manifold pressures. The basic discharge duration, after being read out from the memory, is further modified by signals sent from various sensors to obtain the final discharge duration.

Idle Air Control
Idle Air Control Valve (IAC Valve)
When the engine is cold, the A/C compressor is on, the transmission is in gear (A/T only) the brake pedal is depressed, the P/S load is high, or the alternator is charging, the ECM controls current to the IAC Valve to maintain correct idle speed.

Ignition Timing Control
- The ECM contains mamories for basic ignition timing at various engine speeds and manifold pressures. Ignition timing is also adjusted for engine coolant temperature.
- A Knock Control System is also used. When detonation is detected by the knock sensor, the ignition timing is retarded (B18C1 engine).

Other Control Functions
1. Starting Control
   When the engine is started, the ECM provides a rich mixture by increasing fuel injector duration.
2. Fuel Pump Control
   - When the ignition switch is initially turned on, the ECM supplies ground to the PGM-FI main relay that supplies current to the fuel pump for two seconds to pressurize the fuel system.
   - When the engine is running, the ECM supplies ground to the PGM-FI main relay that supplies current to the fuel pump.
   - When the engine is not running and the ignition is on, the ECM cuts ground to the PGM-FI main relay which cuts current to the fuel pump.

3. Fuel Cut-off Control
   - During deceleration with the throttle valve closed, current to the fuel injectors is cut off to improve fuel economy at speeds over following rpm:
     - B18B1 engine: 910 rpm (Canada model: 1,050 rpm)
     - B18C1 engine: 950 rpm (Canada model: 1,050 rpm)

   - Fuel cut-off action also takes place when engine speed exceeds, 7,000 rpm (B18B1 engine), 8,100 rpm (B18C1 engine), regardless of the position of the throttle valve, to protect the engine from over-revving.

4. A/C Compressor Clutch Relay
   When the ECM receives a demand for cooling from the air conditioning system, it delays the compressor from being energized, and enriches the mixture to assure smooth transition to the A/C mode.

5. Evaporative Emission (EVAP) Purge Control Solenoid Valve
   When the engine coolant temperature is below 163°F (73°C), the ECM supplies a ground to the EVAP purge control solenoid valve which cuts vacuum to the EVAP purge control diaphragm valve.

6. Intake Air Bypass (IAB) Control Solenoid Valve
   When the engine rpm is below 5,750 rpm, the IAB control solenoid valve is activated by a signal from the ECM, intake air flows through the long intake path, then high torque is delivered. At speeds higher than 5,750 rpm, the solenoid valve is deactivated by the ECM, and intake air flows through the short intake path in order to reduce the resistance in airflow.

ECM fail-safe/back-up Functions

1. Fail-safe Function
   When an abnormality occurs in a signal from a sensor, the ECM ignores that signal and assumes a pre-programmed value for that sensor that allows the engine to continue to run.

2. Back-up Function
   When an abnormality occurs in the ECM itself, the fuel injectors are controlled by a back-up circuit independent of the system in order to permit minimal driving.

3. Self-diagnosis Function [Malfunction Indicator Lamp (MIL)]
   When an abnormality occurs in a signal from a sensor, the ECM supplies ground for the MIL and stores the code in erasable memory. When the ignition is initially turned on, the ECM supplies ground for the MIL for two seconds to check the MIL bulb condition.

4. Two Trip Detection Method
   To prevent false indications, the Two Trip Detection Method is used for the HO2S and fuel metering-related self-diagnostic functions. When an abnormality occurs, the ECM stores it in its memory. When the same abnormality recurs after the ignition switch is turned OFF and ON again, the ECM informs the driver by lighting the MIL. However, to ease troubleshooting, this function is cancelled when you short the service check connector. The MIL will then blink immediately when an abnormality occurs.

Engine Control Module (ECM)

NOTE: If this symptom is intermittent, check for a loose fuse No. 15 (BACK UP LIGHT, 10A) in the under-dash fuse/relay box, a poor connection at ECM terminal A13, or an intermittent open in the GRN/ORN wire between the ECM (A13) and the gauge assembly.

The Malfunction Indicator Lamp (MIL) never comes on (even for two seconds) after ignition is turned on.

Turn the ignition switch ON.

Is the low oil pressure light on?

NO → Inspect No. 15 (BACK-UP LIGHT) (10 A) fuse in the under-dash fuse/relay box.

Is the fuse OK?

NO → **– Replace No. 15 (BACK-UP LIGHT) (10 A) fuse.**
– Repair short in YEL wire between No. 15 (BACK-UP LIGHT) (10 A) fuse and gauge assembly.

YES → **Repair open in YEL wire between No.15 (BACK-UP LIGHT) (10 A) fuse and gauge assembly.**

YES

Turn the ignition switch OFF.

Connect the test harness between the ECM and connectors (see page 11-37).

Connect A13 terminal to body ground.

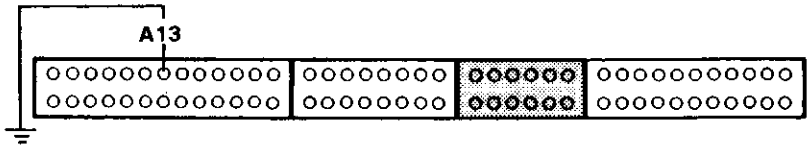

Turn the ignition switch ON.

Is the MIL on?

NO → **– Replace the MIL bulb.**
– Repair open in GRN/ORN wire between ECM (A13) and gauge assembly.

YES

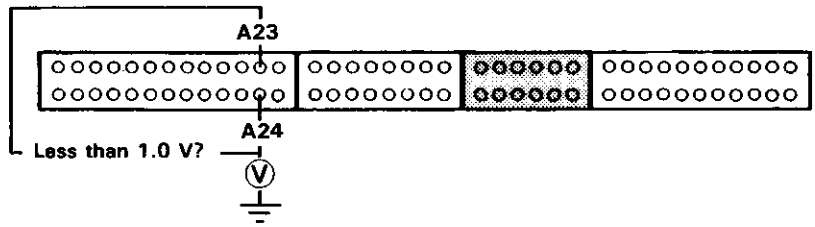

(B18B1 engine only)

Measure voltage between body ground and the following terminals individually: A23, A24.

Is there less than 1.0 V?

NO → **Repair open in BLK wire(s) between ECM and G101 (located at thermostat housing) that had more than 1.0 V.**

YES

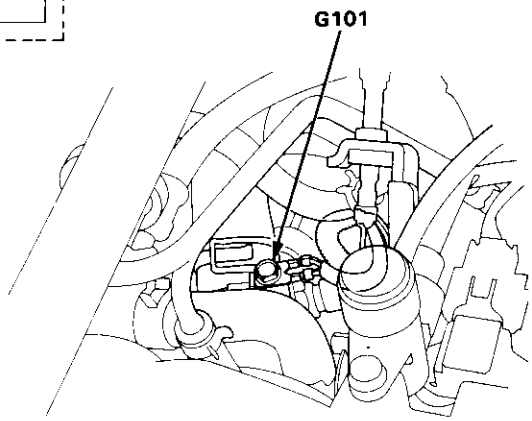

Substitute a known-good ECM and recheck. If symptom/indication goes away, replace the original ECM.

NOTE:

- When there is no code stored, the MIL will stay on if the service check connector is shorted.
- If this symptom is intermittent, check for:
  - A loose ECM fuse (15A) in the under-hood fuse/relay box
  - A loose No. 24 fuse (ACG) (ALT) (15A: B18B1 engine, 20A: B18C1 engine) in the under-dash fuse/relay box
  - An intermittent short in the BRN/WHT wire between the ECM (D4) and the service check connector
  - An intermittent open in the BLK wire between the service check connector and G401
  - An intermittent short in the GRN/ORN wire between the ECM (A13) and the gauge assembly.
  - An intermittent short in the YEL/WHT wire between the ECM (D19) and the MAP sensor
  - An intermittent short in the YEL/BLU wire between the ECM (D20) and the TP sensor

The Malfunction Indicator Lamp (MIL) stays on or comes on after two seconds.

Connect the SCS short connector to the service check connector (see page 11-34).

Turn the ignition switch ON.

Does the MIL indicate any Diagnostic Trouble Code (DTC)?

YES → **Go to self-diagnostic procedures (see page 11-34).**

NO

Remove the SCS short connector from the service check connector.

Try to start the engine.

Did the engine start?

YES → Turn the ignition switch OFF.

Connect the test harness between the ECM and connectors (see page 11-37).

Turn the ignition switch ON.

Measure voltage between D4 (+) terminal and D22 (−) terminal.

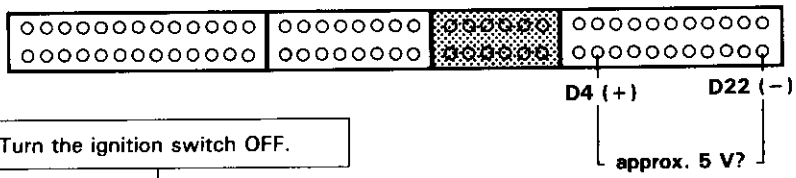

Is there approx. 5 V?

YES → Connect the SCS short connector to service check connector.

Measure voltage between D4 (+) terminal and body ground.

Is there approx. 5 V?

YES → *
- **Repair open in BRN/WHT wire between ECM (D4) and service check connector.**
- **Repair open in BLK wire between service check connector and G401.**

NO → Remove the SCS Short Connector from the service check connector.

(B) (To page 11-44)

NO → **Repair short to body ground in BRN/WHT wire between the ECM (D4) and service check connector.**

NO

Inspect ECU (ECM) (15 A) fuse in the under-hood fuse/relay box.

Is the fuse OK?

NO → *
- **Replace ECU (ECM) (15 A) fuse.**
- **Repair short in YEL/WHT wire between ECU (ECM) (15 A) fuse and PGM-FI main relay.**

YES

(A) (To page 11-44)

*NOTE: After repair, disconnect the SCS Short Connector, test drive the car, and recheck the MIL for a code.

(cont'd)

Engine Control Module (ECM) (cont'd)

(From page 11-43)

A

Inspect the No. 24 ACG (ALT) (IG) (15 A: B18B1 engine, 20A: B18C1 engine) fuse in the under-dash fuse/relay box.

Is the fuse OK?

NO

- **Repair short in BLK/YEL wire between under-dash fuse/relay box and PGM-FI main relay.**
- **Replace No. 24 ACG (IG) (ALT) (15 A: B18B1 engine, 20A: B18C1 engine) fuse.**

YES

Turn the ignition switch ON.

Disconnect the 3P connector of each sensor one at a time:
- MAP sensor
- TP sensor

Does the MIL remain ON?

NO

Replace the sensor that caused the light to go out.

YES

Turn the ignition switch OFF.

Connect the test harness. Disconnect the "D" connector from the ECM only, not the main wire harness (see page 11-37).

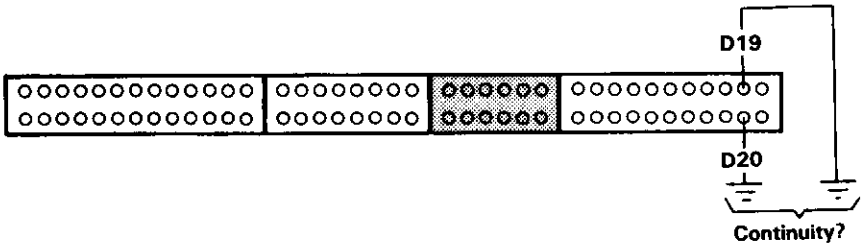

Check for continuity between body ground and D19, D20 terminals.

Is there continuity?

YES

- **Repair short to body ground in YEL/WHT wire between ECM (D19) and MAP sensor.**
- **Repair short to body ground in YEL/BLU wire between ECM (D20) and TP sensor.**

NO

Reconnect all the sensor connectors.
Reconnect the "D" connector to the ECM.

Turn the ignition switch ON.

(To page 11-45)

(From page 11-43)

B

Turn the ignition switch OFF.

Disconnect "A" connector from the ECM.

Turn the ignition switch ON.

Is the MIL ON?

NO

Substitute a known-good ECM and recheck. If symptom/indication goes away, replace the original ECM.

YES

Repair short to body ground in GRN/ORN wire between the ECM (A13) and MIL.

(From page 11-44)

Measure voltage between A26 (−) and the following: B1 (+) and A25 (+).

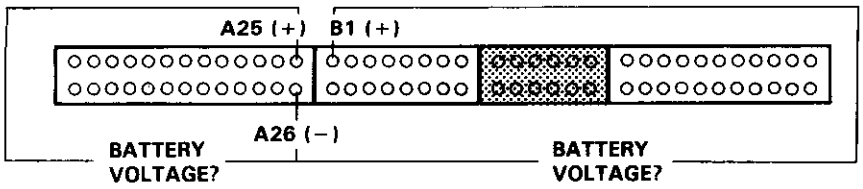

Is there battery voltage?

NO

- **Repair open in YEL/BLK wire between ECM (A25, B1) and PGM-FI main relay.**
- **Check PGM-FI main relay and wiring connectors at PGM-FI main relay (see page 11-112).**

YES

Measure voltage between body ground and the following terminals individually: A23, A24, A26, B2.

Is there less then 1.0 V?

NO

- **Repair open in BLK wire between ECM (A23, A24) and G101 (located at thermostat housing).**
- **Repair open in BRN/BLK wire between ECM (A26, B2) and G101.**

YES

Substitute a known-good ECM and recheck. If symptom/indication goes away, replace the original ECM.

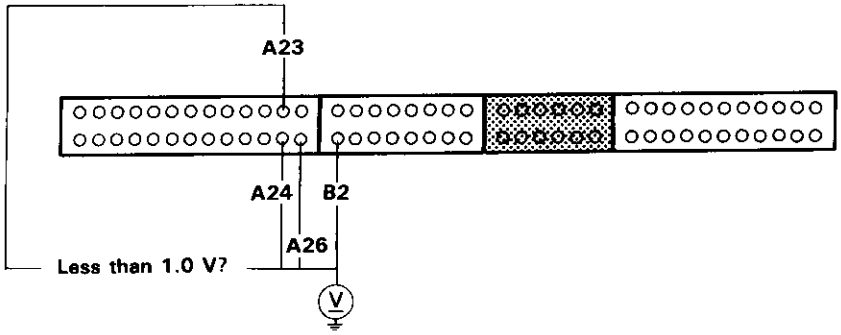

Heated Oxygen Sensor (HO2S)

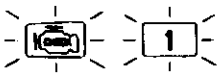

The Malfunction Indicator Lamp (MIL) indicates Diagnostic Trouble Code (DTC) 1: A problem in the Heated Oxygen Sensor (HO2S) circuit.

The Heated Oxygen Sensor (HO2S) detects the oxygen content in the exhaust gas and signals the ECM. In operation, the ECM receives the signals from the sensor and varies the duration during which fuel is injected. To stabilize the sensor's output, the sensor has an internal heater and the sensor element is coated with a catalyst. The HO2S is installed in TWC housing (B18C1 engine) or exhaust pipe B (B18B1 engine).

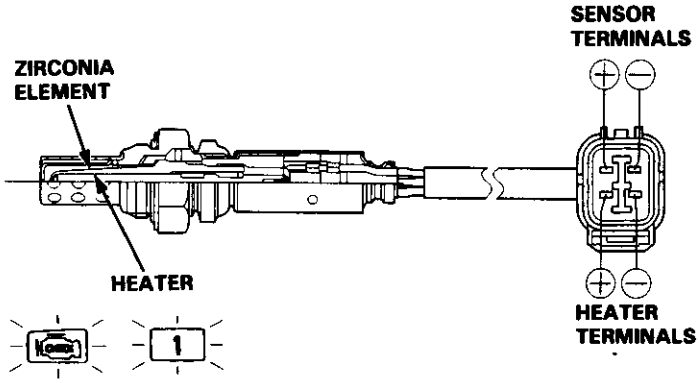

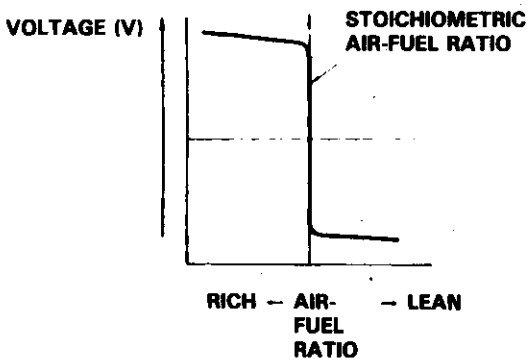

- **The MIL has been reported on.**
- **With the SCS short connector connected (see page 11-34), code 1 is indicated.**

Do the ECM Reset Procedure (see page 11-35).

Start the engine. Hold the engine at 3,000 rpm with no load (A/T in N or P position, M/T in neutral) until the radiator fan comes on, then let it idle for at least one minute before road testing.

Connect the SCS short connector to the service check connector (see page 11-34).

Road test with the automatic transmission in 2 position (M/T: 4th gear).
Starting at 1,600 rpm, accelerate using wide open throttle for at least 5 seconds. Then decelerate for at least 5 seconds with the throttle completely closed.

Does the MIL blink and does it indicate code 1?

NO → **Intermittent failure, system is OK at this time. Check for poor connections or loose wires at C223 (located at right shock tower), C113 (HO2S) and ECM.**

YES → **Go to page and perform test for code 43 (see page 11-50).**

Heated Oxygen Sensor Heater

The Malfunction Indicator Lamp (MIL) indicates Diagnostic Trouble Code (DTC) 41: A problem in the Heated Oxygen Sensor (HO2S) Heater circuit.

– The MIL has been reported on.
– With the SCS short connector connected (see page 11-34), code 41 is indicated.

Do the ECM Reset Procedure (see page 11-35).

Start the engine.

Is the MIL on and does it indicate code 41?

NO → **Intermittent failure, system is OK at this time (test drive may be necessary). Check for poor connections or loose wires at C223 (located at right shock tower), C305 (located at left shock tower), C424, C113 (HO2S) and ECM.**

YES

Turn the ignition switch OFF.

Disconnect the 4P connector from the HO2S.

Measure resistance between terminals 3 and 4 on the HO2S.

Is there 10–40 Ω?

NO → **Replace the HO2S.**

YES

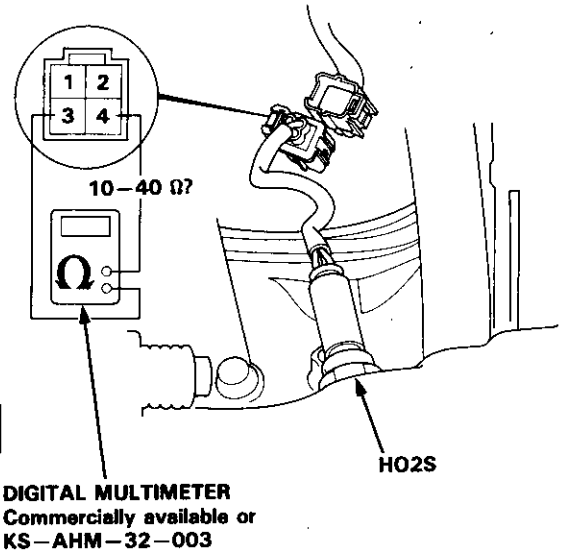

(cont'd)

(To page 11-48)

Heated Oxygen Sensor Heater (cont'd)

(From page 11-47)

Check for continuity to body ground on terminals 3 and 4 of the HO2S.

Is there continuity? — YES → **Replace the HO2S.**

NO

Check for continuity between terminal 4 and terminals 1 and 2 individually.

Is there continuity? — YES → **Replace the HO2S.**

NO

Turn the ignition switch ON.

At the HO2S harness, measure voltage between YEL/BLK (+) terminal and ORN/BLK (−) terminal.

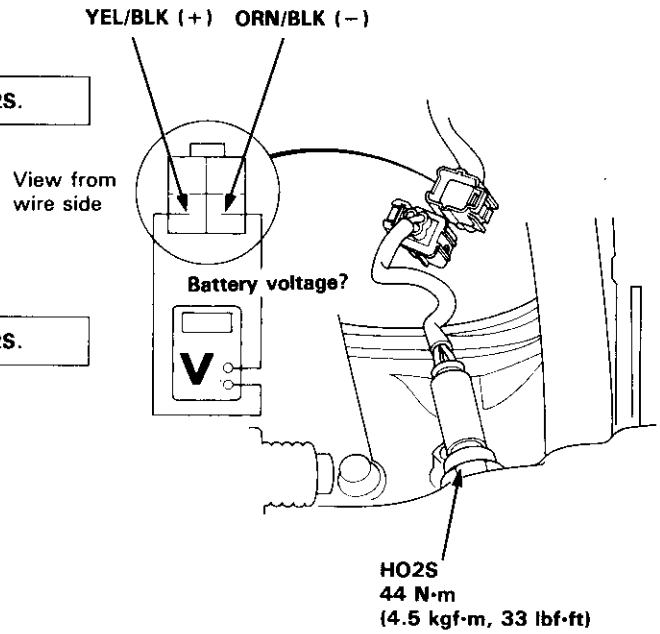

Is there battery voltage? — YES → Turn the ignition switch OFF.

Disconnect the "A" connector from the ECM.

Turn the ignition switch ON.

At HO2S harness, measure voltage between YEL/BLK (+) terminal and ORN/BLK (−) terminal.

Is there battery voltage? — YES → **Repair short in ORN/BLK wire between ECM (A6) and HO2S.**

NO

Turn the ignition switch OFF.

Reconnect the HO2S connector.

(B) (To page 11-49)

NO

Measure voltage between YEL/BLK (+) terminal and body ground.

Is there battery voltage? — NO → **Repair open in YEL/BLK wire between HO2S and PGM-FI main relay.**

YES

Turn the ignition switch OFF.

(A) (To page 11-49)

(From page 11-48)

A

Reconnect the 4P connector to the HO2S.

Connect the test harness "A" connector to the main wire harness only, not the ECM (see page 11-37).

Turn the ignition switch ON.

Measure voltage between A6 (+) terminal and A23 (−) terminal.

Is there battery voltage?

NO → **Repair open in ORN/BLK wire between ECM (A6) and the HO2S.**

YES → **Substitute a known-good ECM and recheck. If symptom/indication goes away, replace the original ECM.**

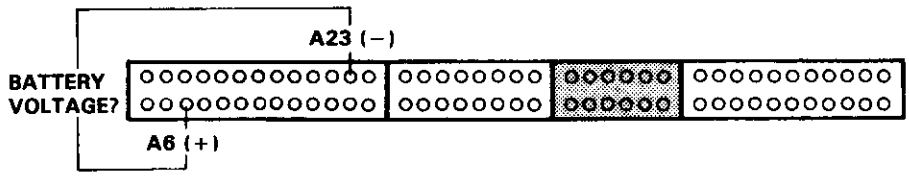

(From page 11-48)

B

Connect the test harness "A" connector to the main wire harness only, not the ECM (see page 11-37).

Connect an ammeter between terminals A6 (+) and A26 (−)

Turn the ignition switch ON.

Is the current less than 0.1 A?*

YES → **Replace the HO2S.**

NO → **Substitute a known-good ECM and recheck. If symptom/indication goes away, replace the original ECM.**

* Monitor over a 5 minute period unless the current drops below 0.1A immediately.

Fuel Supply System

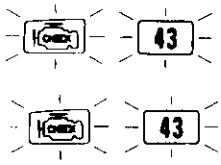

The Malfunction Indicator Lamp (MIL) indicates Diagnostic Trouble Code (DTC) 43: A problem in the Heated Oxygen Sensor (HO2S) circuit, or a problem in the Fuel Supply System.

— The MIL has been reported on.
— With the SCS short connector connected (see page 11-34), code 43 is indicated.

Is the code 43 accompanied by the MIL and poor driveability?

YES → **Go to Fuel Supply system (see page 11-97).**

NO

Do the ECM Reset Procedure (see page 11-35).

Connect the SCS short connector to the service check connector (see page 11-34).

Start the engine. Hold the engine at 3,000 rpm with no load (A/T in N or P position, M/T in neutral) until the radiator fan comes on, then let it idle for at least one minute.

Raise the engine speed to 3,000 rpm and hold that throttle position for at least one minute.
Do not vary the throttle position even if the rpm drops.

Does the MIL blink and does it indicate code 43?

NO → **Intermittent failure, system is OK at this time (test drive may be necessary).**
Check for poor connections or loose wire at C223 (located at right shock tower), C113 (HO2S) and ECM.

YES → **From code 1 trouble-shooting (page 11-46).**

Turn the ignition switch OFF.

Connect the test harness between the ECM and connectors (see page 11-37).

With the ignition switch OFF, wait for at least two minutes.

Install a jumper wire on the test harness between A6 and A26.

(To page 11-51)

NOTE:
- Use DIGITAL MULTIMETER.
- Use 2 Volt range.

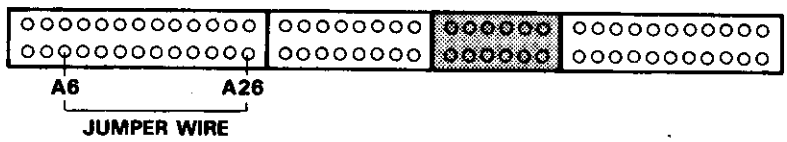

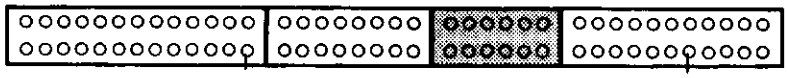

Voltage should start at 0.4—0.5 V when the ignition switch is first turned on, and decrease to below 0.1 V in less than two minutes.

(From page 11-50)

Turn the ignition switch ON.

Measure voltage between D14 (+) terminal and A26 (−) terminal as soon as the ignition switch is turned on.

Is there 0.1 V or less when the ignition switch is first turned on?

YES → Disconnect the 4P connector from the HO2S.

Measure voltage between D14 (+) terminal and A26 (−) terminal.

Is there more than 0.1 V?

YES → **Replace the HO2S.**

NO → Turn the ignition switch OFF.

Disconnect the "D" connector from the main wire harness.

Turn the ignition switch ON.

Measure voltage between D14 (+) terminal and A26 (−) terminal.

Is there more than 0.1 V?

YES → **Repair short in WHT/RED wire between ECM (D14) and the HO2S.**

NO → **Substitute a known-good ECM and recheck. If symptom/indication goes away, replace the original ECM.**

NO → Disconnect the 4P connector from the HO2S.

Measure voltage at the engine wire harness side of the HO2S connector between WHT/RED (+) and GRN/BLU (−).

Is there more than 0.1 V?

YES → **Replace the HO2S.**

NO → **Check for open in WHT/RED wire between ECM (D14) and the HO2S. If wire is OK, repair open in GRN/BLU wire between ECM (D22) and the HO2S.**

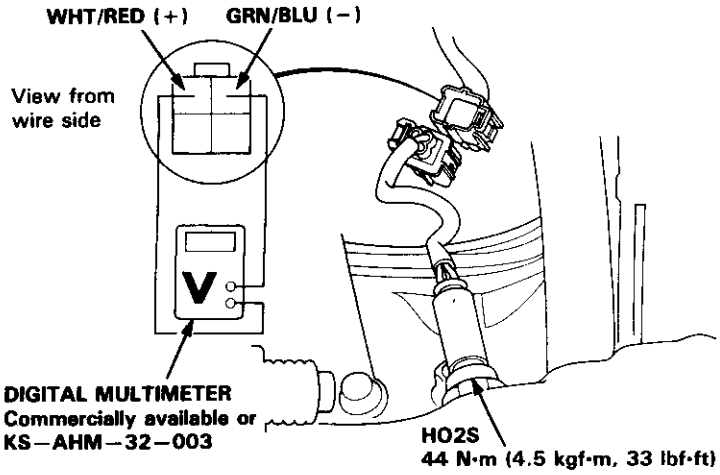

Manifold Absolute Pressure (MAP) Sensor

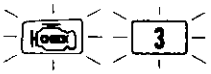

The Malfunction Indicator Lamp (MIL) indicates Diagnostic Trouble Code (DTC) 3: An electrical problem in the Manifold Absolute Pressure (MAP) Sensor circuit.

The MAP sensor converts manifold absolute pressure into electrical signals and inputs the ECM.

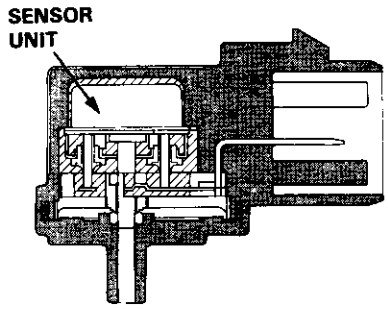

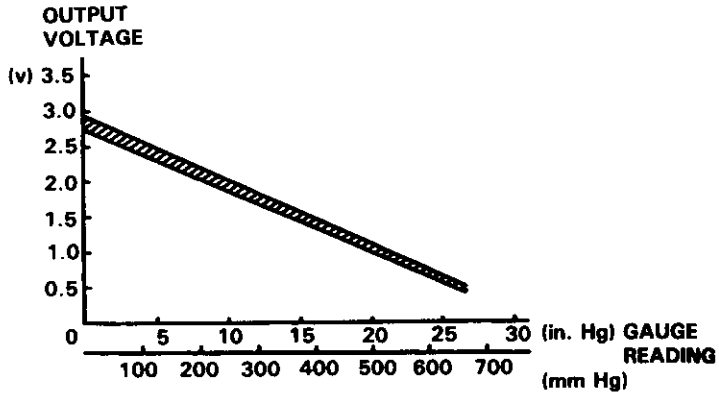

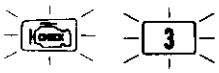

- **The MIL has been reported on.**
- **With the SCS short connector connected (see page 11-34), code 3 is indicated.**

Do the ECM Reset Procedure (see page 11-35).

Start the engine and allow it to idle.

Is the MIL on and does it indicate code 3?

NO → **Intermittent failure, system is OK at this time (test drive may be necessary). Check for poor connection or loose wires at C223 (located at right shock tower), C114 (MAP sensor) and ECM.**

YES

Turn the ignition switch OFF.

Disconnect the 3P connector from the MAP sensor.

Turn the ignition switch ON.

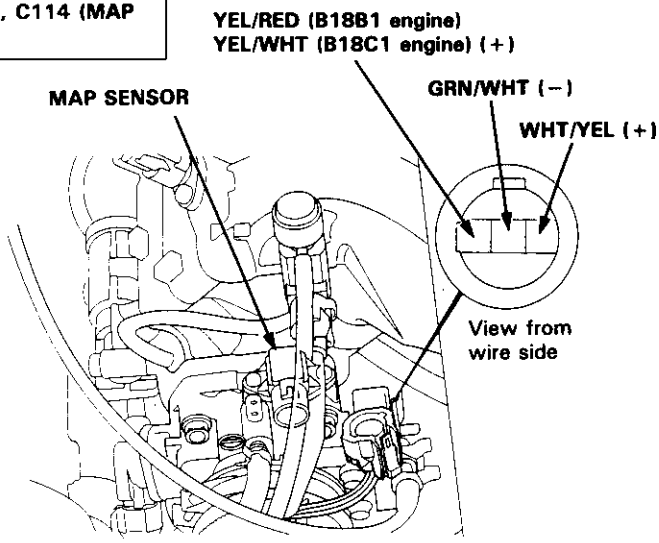

(To page 11-53)

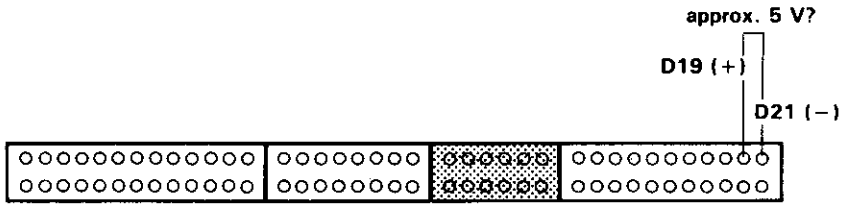

(From page 11-52)

Measure voltage between YEL/WHT (B18C1 engine), YEL/RED (B18B1 engine) (+) terminal and body ground.

Is there approx. 5 V?

YES → Measure voltage between YEL/WHT (B18C1 engine), YEL/RED (B18B1 engine) (+) terminal and GRN/WHT (−) terminal.

Is there approx. 5 V?

NO → **Repair open in GRN/WHT wire between ECM (D21) and the MAP sensor.**

YES → Measure voltage between WHT/YEL (+) terminal and GRN/WHT (−) terminal.

Is there approx. 5 V?

NO → Turn the ignition switch OFF.

Connect the test harness "D" connector to the ECM only, not to the main wire harness (see page 11-37).

Turn the ignition switch ON.

Measure voltage between D19 (+) terminal and D21 (−) terminal.

Is there approx. 5 V?

YES → **Repair open in YEL/WHT wire between ECM (D19) and the MAP sensor.**

NO → **Substitute a known-good ECM and recheck. If symptom/indication goes away, replace the original ECM.**

YES → Turn the ignition switch OFF.

Reconnect the 3P connector to the MAP sensor.

Connect the test harness between the ECM and connector (see page 11-37).

Turn the ignition switch ON.

A (To page 11-54)

B (To page 11-54)

(cont'd)

Manifold Absolute Pressure (MAP) Sensor (cont'd)

(From page 11-53)

A

Turn the ignition switch OFF.

Connect the test harness "D" connector to the ECM only, not to the main wire harness (see page 11-37).

Turn the ignition switch ON.

Measure voltage between D17 (+) terminal and D21 (−) terminal.

Is there approx. 5 V?

YES → **Repair open or short in WHT/YEL wire between ECM (D17) and the MAP sensor.**

NO → **Substitute a known-good ECM and recheck. If prescribed voltage is now available, replace the original ECM.**

(From page 11-53)

B

Measure voltage between D17 (+) terminal and D21 (−) terminal.

Is there approx. 3 V?

NO → **Replace the MAP sensor.**

YES → **Substitute a known-good ECM and recheck. If symptom/indication goes away, replace the original ECM.**

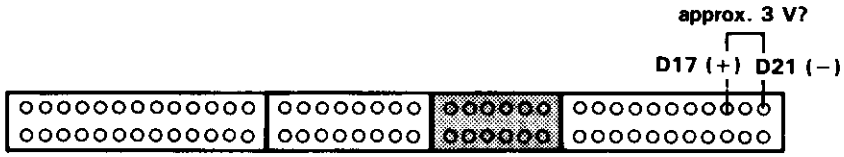

TDC/CKP/CYP Sensor

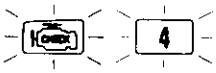

The Malfunction Indicator Lamp (MIL) indicates Diagnostic Trouble Code (DTC) 4: A problem in the Crankshaft Position (CKP) Sensor circuit.

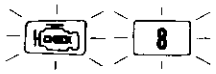

The Malfunction Indicator Lamp (MIL) indicates Diagnostic Trouble Code (DTC) 8: A problem in the Top Dead Center (TDC) Sensor circuit.

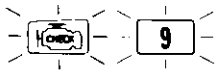

The Malfunction Indicator Lamp (MIL) indicates Diagnostic Trouble Code (DTC) 9: A problem in the Cylinder Position (CYP) Sensor circuit.

The CKP Sensor determines timing for fuel injection and ignition of each cylinder and also detects engine speed. The TDC Sensor determines ignition timing at start-up (cranking) and when crank angle is abnormal. The CYP Sensor detects the position of No. 1 cylinder for sequential fuel injection to each cylinder.

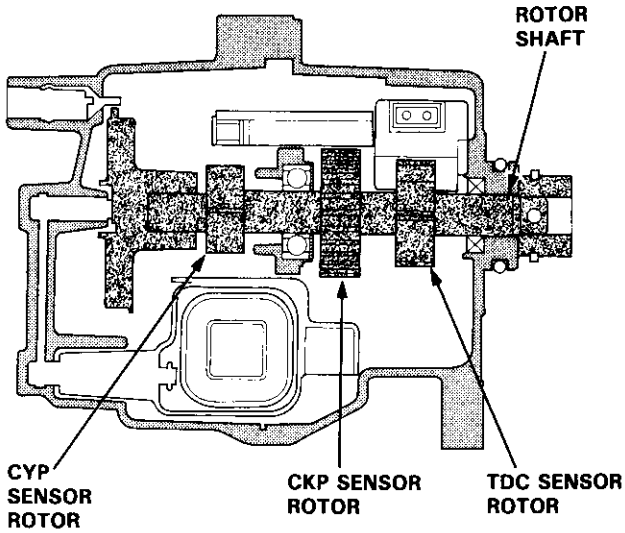

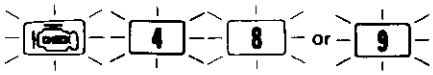

– The MIL has been reported on.
– With the SCS short connector connected (see page 11-34), code 4, 8 and/or 9 are indicated.

Do the ECM Reset procedure (see page 11-35).

Start the engine.

Is the MIL on and does it indicate code 4, 8 and/or 9?

NO → **Intermittent failure, system is OK at this time (test drive may be necessary).**
Check for poor connections or loose wires at C222 (located at right shock tower), C110 (TDC/CKP/CYP Sensor) and ECM.

YES

Turn the ignition switch OFF.

Disconnect the 8P connector from the TDC/CKP/CYP sensor.

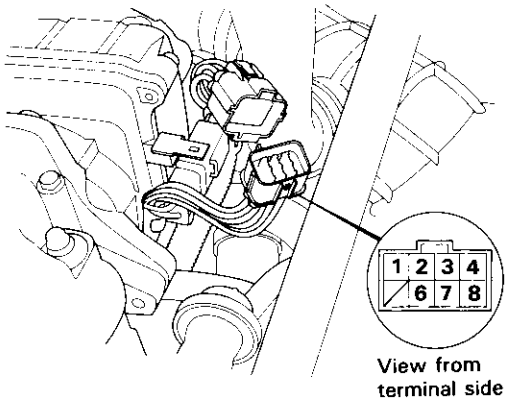

(To page 11-57)

(From page 11-56)

Measure resistance between terminals of the indicated sensor.
*see table

Is there 350–700 Ω?

NO → **Replace the distributor housing (see section 23).**

YES

Check for continuity to body ground on both terminals of the indicated sensor.

Is there continuity?

YES → **Replace the distributor housing (see section 23).**

NO

Reconnect the connector.

Connect the test harness to the main wire harness only, not to the ECM (see page 11-37).

Measure resistance between terminals of the indicated sensor on test harness.
*see table

Is there 350–700 Ω?

NO → **Repair open in the indicated sensor wires.**
***see table**

YES

Check for continuity to body ground on B15, B13 and/or B11 terminals.

Is there continuity?

YES → **Repair short to body ground in the indicated sensor wires.**
***see table**

NO

Substitute a known-good ECM and recheck. If symptom/indication goes away, replace the original ECM.

*:

SENSOR	DTC	SENSOR TERMINAL	ECM TERMINAL	WIRE COLOR
CKP	4	2	B15	BLU/GRN
		6	B16	BLU/YEL
TDC	8	3	B13	ORN/BLU
		7	B14	WHT/BLU
CYP	9	4	B11	ORN
		8	B12	WHT

CKP:

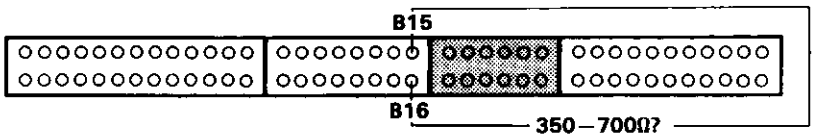

TDC:

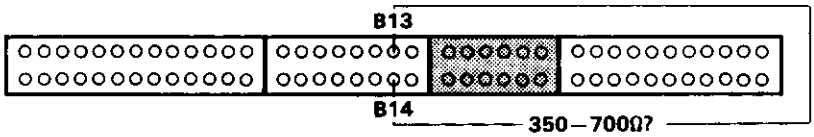

CYP:

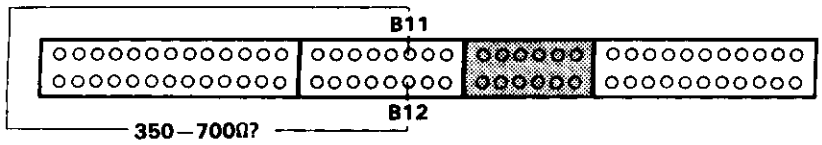

Engine Coolant Temperature (ECT) Sensor

The Malfunction Indicator Lamp (MIL) indicates Diagnostic Trouble Code (DTC) 6: A problem in the Engine Coolant Temperature (ECT) Sensor circuit.

The ECT Sensor is a temperature dependant resistor (thermistor). The resistance of the thermistor decreases as the engine coolant temperature increases as shown below.

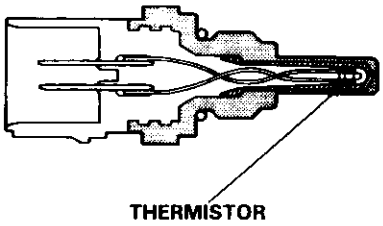

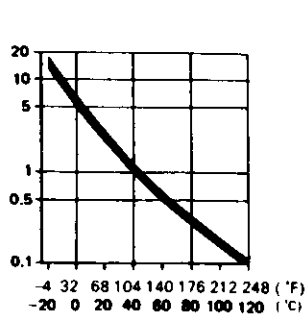

- **The MIL has been reported on.**
- **With the SCS short connector connected (see page 11-34), code 6 is indicated.**

Do the ECM Reset Procedure (see page 11-35).

Turn the ignition switch ON.

Is the MIL on and does it indicate code 6?

NO → **Intermittent failure, system is OK at this time (test drive may be necessary). Check for poor connections or loose wires at C223 (located at right shock tower, C111 (ECT sensor), C419 (TCM) and ECM.**

YES

Start the engine. Hold the engine at 3,000 rpm with no load (A/T in N or P position, M/T in neutral) until the radiator fan comes on, then let it idle.

Turn the ignition switch OFF.

Disconnect the 2P connector from the ECT sensor.

Measure resistance between the 2 terminals on the ECT sensor.

Is there 200–400 Ω?

NO → **Replace the ECT sensor.**

YES

(To page 11-59)

(From page 11-58)

Turn the ignition switch ON.

Measure voltage between RED/WHT and body ground.

Is there approx. 5 V?

YES → Measure voltage between RED/WHT (+) terminal and GRN/BLU (−) terminal.

Is there approx. 5 V?

NO → **Repair open in GRN/BLU wire between ECM (D22) and the ECT sensor.**

YES → **Substitute a known-good ECM and recheck. If symptom/indication goes away, replace the original ECM.**

NO → Turn the ignition switch OFF.

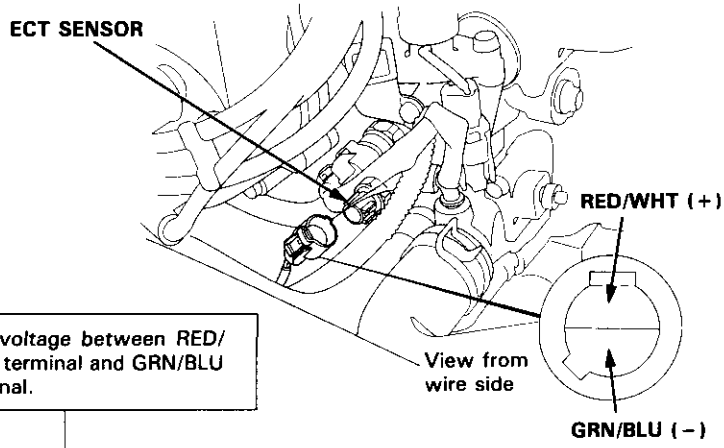

A/T only

Disconnect the 22P connector from the Transmission Control Module (TCM).

Turn the ignition switch ON.

Is there approx. 5 V?

YES → **Replace the TCM.**

NO → Turn the ignition switch OFF and reconnect the connector to the TCM.

Connect the test harness "D" connector to the ECM only, not to the main wire harness (see page 11-37).

Turn the ignition switch ON.

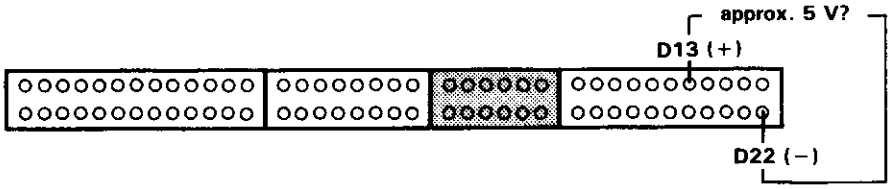

Measure voltage between D13 (+) terminal and D22 (−) terminal.

Is there approx. 5 V?

YES → **− Repair open or short in RED/WHT wire between ECM (D13) and the ECT sensor.**
− Repair short in RED/WHT wire between ECM (D13) and TCM.

NO → **Substitute a known-good ECM and recheck. If symptom/indication goes away, replace the original ECM.**

Throttle Position (TP) Sensor

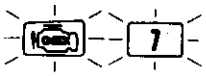

The Malfunction Indicator Lamp (MIL) indicates Diagnostic Trouble Code (DTC) 7: A problem in the Throttle Position (TP) Sensor circuit.

The TP Sensor is a potentiometer. It is connected to the throttle valve shaft. As the throttle position changes, the throttle position sensor varies the voltage signal to the ECM.

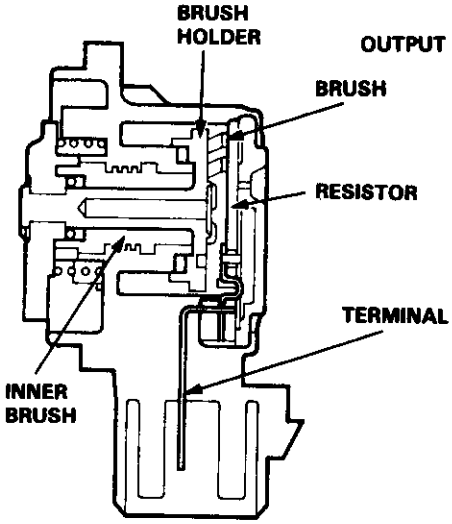

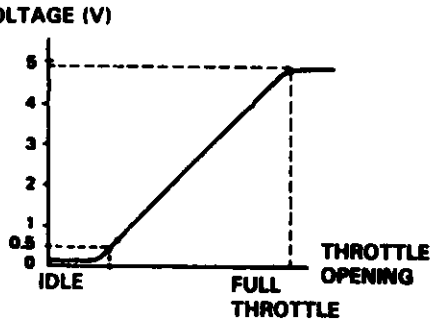

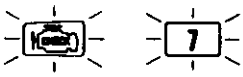

- The MIL has been reported on.
- With the SCS short connector connected (see page 11-34), code 7 is indicated.

Do the ECM Reset Procedure (see page 11-35).

Start the engine.

Is the MIL on and does it indicate code 7?

NO → Intermittent failure, system is OK at this time (test drive may be necessary). Check for poor connections or loose wires at C223 (located at right shock tower), C115 (TP sensor), C419 (TCM) and ECM.

YES

Turn the ignition switch OFF.

Disconnect the 3P connector from the TP sensor.

Turn the ignition switch ON.

Measure voltage between YEL/BLU (+) terminal and GRN/BLU (−) terminal.

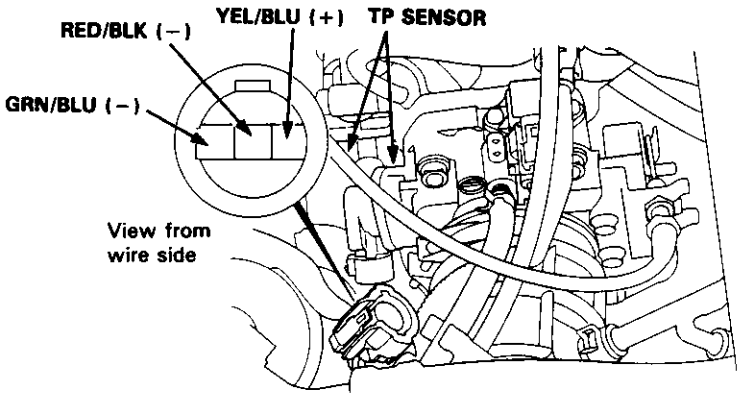

Is there approx. 5 V?

NO → Measure voltage between YEL/BLU (+) terminal and body ground.

YES

A (To page 11-61)

B (To page 11-61)

(From page 11-60)

A

Turn the ignition switch OFF.

Reconnect the 3P connector.

Connect the test harness between the ECM and connectors (see page 11-37).

Turn the ignition switch ON.

Measure voltage between D11 (+) terminal and D22 (−) terminal.

Is voltage approx. 0.5 V at full close throttle, and approx. 4 V at full open throttle?
NOTE: There should be a smooth transition as the throttle is depressed.

YES

Substitute a known-good ECM and recheck. If symptom/indication goes away, replace the original ECM.

NO

A/T only

Turn the ignition switch OFF.

Disconnect the 22P connector from the Transmission Control Module (TCM).

Turn the ignition switch ON.

Is voltage approx. 0.5 V at full close throttle, and approx. 4 V at full open throttle?
NOTE: There should be a smooth transition as the throttle is depressed.

NO

- **Replace the TP sensor.**
- **Repair open or short in RED/BLK wire between ECM (D11), TCM and TP sensor.**

YES

Replace the TCM.

(From page 11-60)

B

Is there approx. 5 V ?

YES

Repair open in GRN/BLU wire between ECM (D22) and the TP sensor.

NO

Turn the ignition switch OFF.

Connect the test harness between the ECM and connector (see page 11-37).

Turn the ignition switch ON.

Measure voltage between D20 (+) terminal and D22 (−) terminal.

Is there approx. 5 V ?

YES

Repair open in YEL/BLU wire between ECM (D20) and the TP sensor.

NO

- **Repair short in YEL/BLU wire between ECM (D20) and the TP sensor.**
- **Substitute a known-good ECM and recheck. If prescribed voltage is now available, replace the original ECM.**

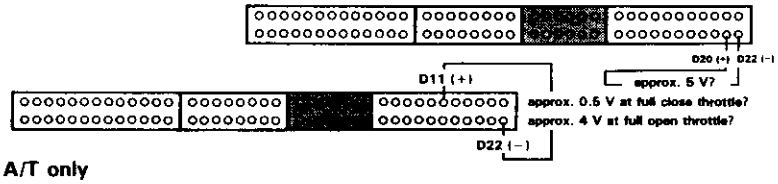

Intake Air Temperature (IAT) Sensor

10 The Malfunction Indicator Lamp (MIL) indicates Diagnostic Trouble Code (DTC) 10: A problem in the Intake Air Temperature (IAT) Sensor circuit.

The IAT Sensor is a temperature dependant resistor (thermistor). The resistance of the thermistor decreases as the intake air temperature increases as shown below.

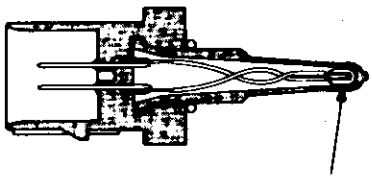

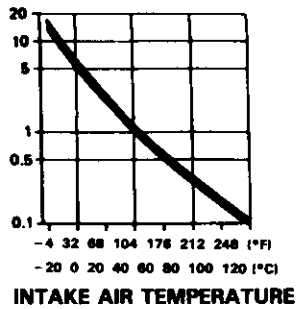

10

- **The MIL has been reported on.**
- **With the SCS short connector connected (see page 11-34), code 10 is indicated.**

Do the ECM Reset Procedure (see page 11-35).

Turn the ignition switch ON.

Is the MIL on and does it indicate code 10 ?

NO → **Intermittent failure, system is OK at this time (test drive may be necessary). Check for poor connections or loose wires at C223 (located right shock tower), C120 (IAT sensor) and ECM.**

YES

Turn the ignition switch OFF.

Disconnect the 2P connector from the IAT sensor.

Measure resistance between the 2 terminals on the IAT sensor.

Is there 0.4—4.0 kΩ?

NO → **Replace the IAT sensor.**

YES

(To page 11-63)

B18B1 engine:

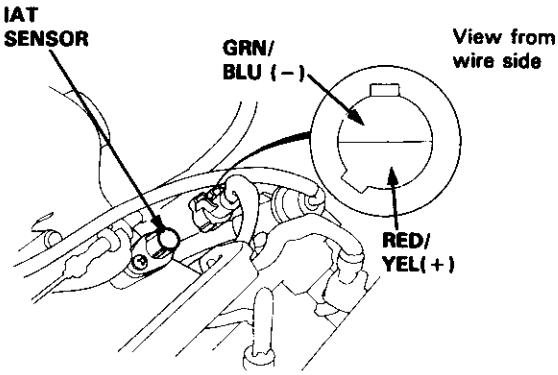

B18C1 engine:

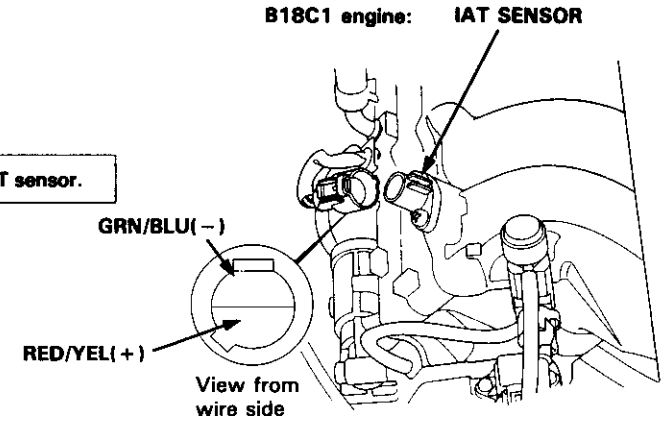

(From page 11-62)

Turn the ignition switch ON.

Measure voltage between RED/YEL (+) terminal and body ground.

Is there approx. 5 V ?

YES → Measure voltage between RED/YEL (+) terminal and GRN/BLU (−) terminal.

Is there approx. 5 V ?

NO → **Repair open in GRN/BLU wire between ECM (D22) and the IAT sensor.**

YES → **Substitute a known-good ECM and recheck. If symptom/indication goes away, replace the original ECM.**

NO

Turn the ignition switch OFF.

Connect the test harness "D" connector to the ECM only, not to the main wire harness (see page 11-37).

Turn the ignition switch ON.

Measure voltage between D15 (+) terminal and D22 (−) terminal.

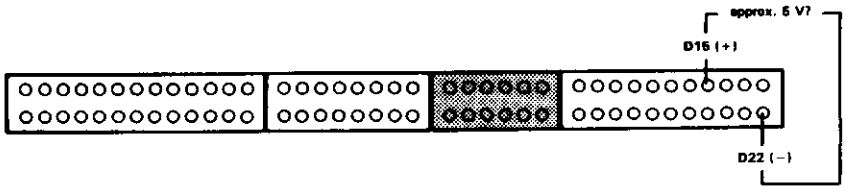

Is there approx. 5 V ?

YES → **Repair open or short in RED/YEL wire between ECM (D15) and the IAT sensor.**

NO → **Substitute a known-good ECM and recheck. If prescribed voltage is now available, replace the original ECM.**

Barometric Pressure (BARO) Sensor

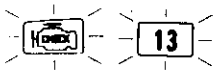

The Malfunction Indicator Lamp (MIL) indicates Diagnostic Trouble Code (DTC) 13: A problem in the Barometric Pressure (BARO) Sensor.

The BARO Sensor is built into the ECM.

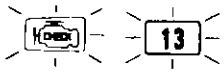

– The MIL has been reported on.
– With the SCS short connector connected (see page 11-34), code 13 is indicated.

Do the ECM Reset Procedure (see page 11-35).

Turn the ignition switch ON.

Is the MIL on and does it indicate code 13 ?

NO → **Intermittent failure, system is OK at this time (test drive may be necessary).**

YES → **Substitute a known-good ECM and reckeck. If symptom/indication goes away, replace the original ECM.**

Ignition Output Signal

15

The Malfunction Indicator Lamp (MIL) indicates Diagnostic Trouble Code (DTC) 15: A problem in the Ignition Output Signal circuit.

– The MIL has been reported on.
– With the SCS short connector connected (see page 11-34), code 15 is indicated.

Do the ECM Reset Procedure (see page 11-35).

Start the engine

NOTE: If the engine won't start, it may take 20 seconds of cranking to set the code.

Is the MIL on and does it indicate code 15 ?

NO → **Intermittent failure, system is OK at this time (test drive may be necessary).**
Check for poor connections or loose wires at C223 (located at right shock tower), C110 (ICM) and ECM.

YES

Turn the ignition switch OFF.

Disconnect the 2P connector from the distributor.

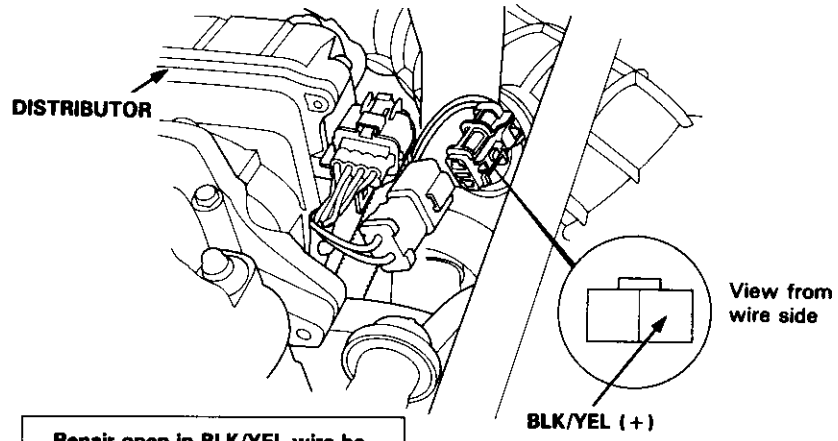

Turn the ignition switch ON.

Measure voltage between BLK/YEL (+) terminal and body ground.

Is there battery voltage ?

NO → **Repair open in BLK/YEL wire between the 2P connector and ignition switch.**

YES

(To page 11-67)

(From page 11-66)

Turn the ignition switch OFF.

Reconnect the 2P connector.

Connect the test harness between the ECM and connectors (see page 11-37).

Turn the ignition switch ON.

Measure voltage between A21 (+) terminal and A26 (−) terminal.

Is there battery voltage ?

NO

- **Replace the ICM (see section 23).**
- **Repair open or short in YEL/GRN wire between ICM and ECM (A21).**

NOTE: If the YEL/GRN wire was shorted, the ICM may be damaged.

YES

Substitute a known-good ECM and reckeck. If symptom/indication goes away, replace the original ECM.

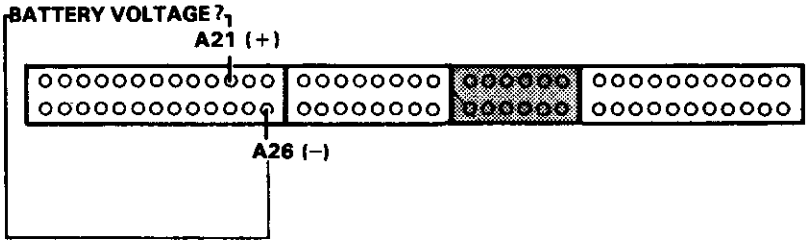

Vehicle Speed Sensor (VSS)

17 The Malfunction Indicator Lamp (MIL) indicates Diagnostic Trouble Code (DTC) 17: A problem in the Vehicle Speed (VSS) circuit.

The VSS generates a pulsing signal when the front wheels turn.

– The MIL has been reported on.
– With the SCS short connector connected (see page 11-34), code 17 is indicated.

Do the ECM Reset Procedure (see page 11-35).

Road test with A/T in 2 position (M/T: in 2nd gear), accelerate to 4,000 rpm, then decelerate to 1,500 rpm with throttle fully closed for at least 5 seconds.

Is the MIL on and does it indicate code 17 ?

NO → **Intermittent failure, system is OK at this time. Check for poor connections or loose wires at C305 (located at left shock tower), C424, C112 (VSS) and ECM.**

YES

Block rear wheels and set the parking brake. Jack up the front of the car and support with safety stands.

⚠ WARNING Block rear wheels before jacking up front of car.

Turn the ignition switch OFF.

Connect the test harness between the ECM and connectors (see page 11-37).

Turn the ignition switch ON.

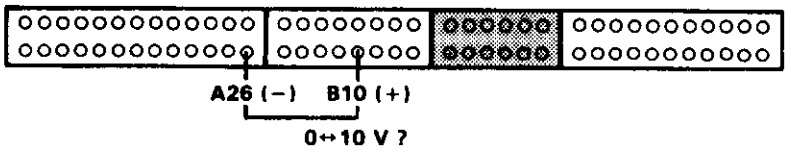

Block the right front wheel and slowly rotate left front wheel and measure voltage between B10 (+) terminal and A26 (–) terminal.

NOTE: Transmission in N position (A/T).

Does voltage pulse 0 V and 10 V?

NO → Turn the ignition switch OFF.

YES

Substitute a known-good ECM and recheck. If symptom/indication goes away, replace the original ECM.

(To page 11-69)

(From page 11-68)

Disconnect the "B" connector from the ECM only, not the main wire harness.

Turn the ignition switch ON.

Block the right front wheel and slowly rotate left front wheel and measure voltage between B10 (+) terminal and A26 (−) terminal.

Does voltage pulse 0 V and 10 V?

NO

- **Repair short in ORN wire between ECM (B10) and the VSS or cruise control unit.**
- **Repair open in ORN wire between ECM (B10) and the VSS.**
- **If wire is OK, test the VSS. (see section 23)**

YES

Substitute a known-good ECM and recheck. If symptom/indication goes away, replace the original ECM.

Electrical Load Detector (ELD)

20 The Malfunction Indicator Lamp (MIL) indicates Diagnostic Trouble Code (DTC) 20: A problem in the Electrical Load Detector (ELD) circuit.

With the SCS short connector connected (see page 11-34), code 20 is indicated.

Do the ECM Reset Procedure (see page 11-35).

Start engine and keep engine speed at idle.
Turn on headlights.

Does the MIL indicate code 20?

NO → **Intermittent failure, system is OK at this time (test drive may be necessary).**
Check for poor connections or loose wires at C218 (ELD) and ECM.

YES

Turn the ignition switch and headlights OFF.

Remove the under-hood fuse/relay box and remove the fuse/relay box lower cover.

Disconnect the 3P connector from the ELD.

Turn the ignition switch ON.

Measure voltage between BLK/YEL (+) terminal and BLK (−) terminal.

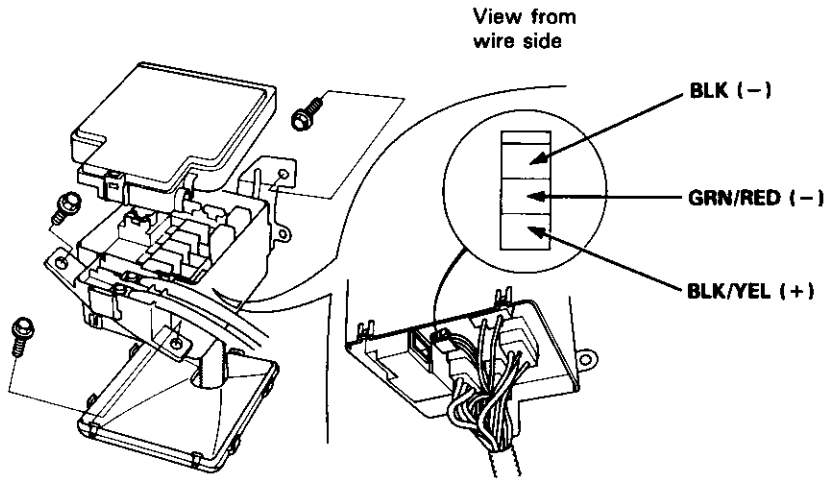

Is there battery voltage?

NO → Measure voltage between BLK/YEL (+) terminal and body ground.

Is there battery voltage?

YES → **Repair open in BLK wire between the 3P connector and G201 (located front of engine compartment right side).**

NO → **Repair open in BLK/YEL wire between No. 24 ACG (ALT) (IG) (15 A: B18B1 engine, 20 A: B18C1 engine) fuse in the under-dash fuse/relay box and the 3P connector.**

YES

(To page 11-71)

(From page 11-70)

Measure voltage between GRN/RED terminal and body ground.

Is there approx. 5 V?

NO → **Repair open or short in GRN/RED wire between ECM (D10) and the 3P connector. If wire is OK, substitute a known-good ECM and recheck.**

YES

Turn the ignition switch OFF.

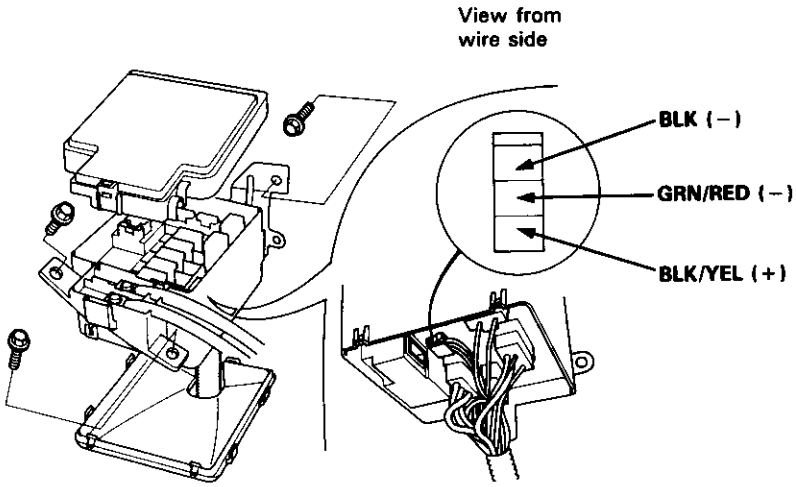

Connect the 3P connector to the ELD.

Connect the test harness between the ECM and connectors (see page 11-37).

(To page 11-72)

(cont'd)

Electrical Load Detector (ELD) (cont'd)

(From page 11-71)

Start the engine and allow it to idle.

While measuring voltage between D10 (+) terminal and A26 (−) terminal, turn the headlight switch to the second position (●) (low).

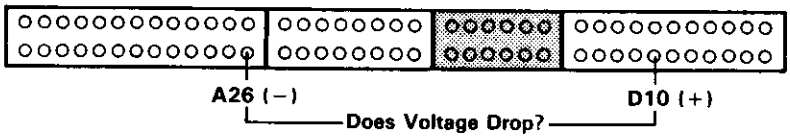

Does the voltage drop when the headlights are turned on?

NO → **Replace the ELD.**

YES

Substitute a known-good ECM and recheck. If symptom/indication goes away, replace the original ECM.

Knock Sensor (KS) [B18C1 engine]

23 The Malfunction Indicator Lamp (MIL) indicates Diagnostic Trouble Code (DTC) 23: A problem in the Knock Sensor (KS) circuit.

23

- **The MIL has been reported on.**
- **With the SCS short connector connected (see page 11-34), code 23 is indicated.**

Do the ECM Reset Procedure (see page 11-35).

Start the engine. Hold the engine at 3,000 rpm with no load (A/T in N or P position, M/T in neutral) until the radiator fan comes on, then let it idle.

Hold the engine at 3,000–4,000 rpm for 10 seconds.

Is the MIL on and does it indicate code 23?

NO → **Intermittent failure, system is OK at this time (test drive may be necessary). Check for poor connections or loose wires at C222 (located at right shock tower), C133 (KS) and ECM.**

YES

Turn the ignition switch OFF.

Connect the test harness to the main wire harness only, not to the ECM (see page 11-37).

Disconnect the 2P connector from the KS.

Check for continuity between D3 terminal and body ground.

Is there continuity?

YES → **Repair short in RED/BLU wire between ECM (D3) and the KS.**

NO

(To page 11-75)

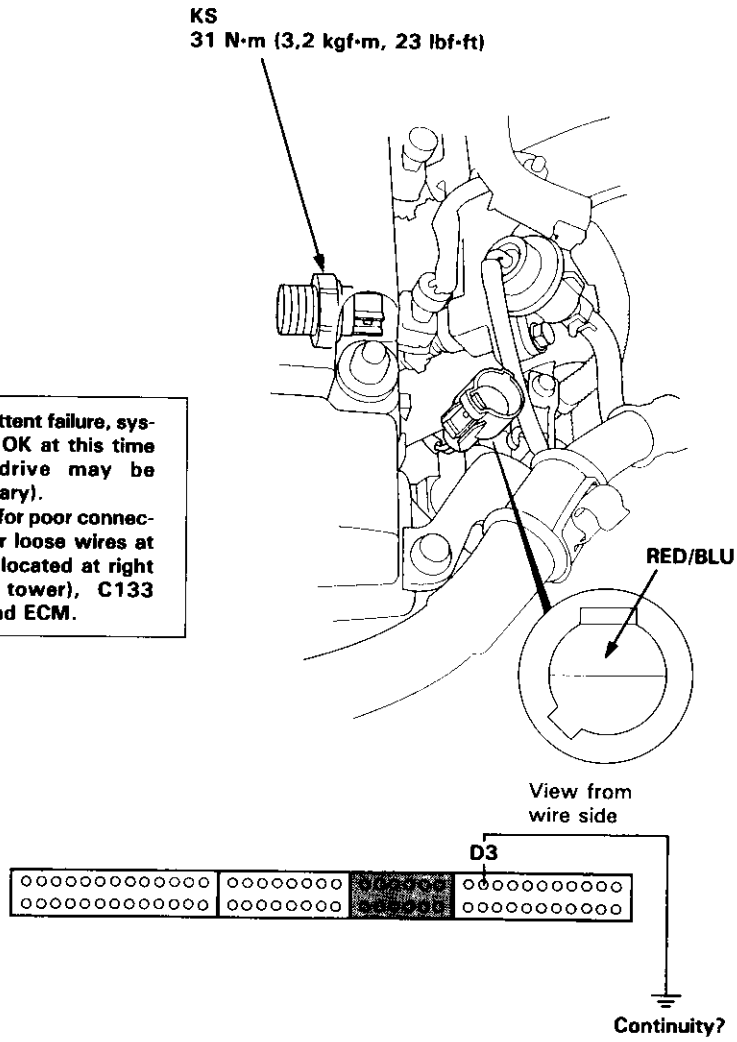

(From page 11-74)

Check for continuity on RED/BLU wire between D3 terminal and 2P connector.

Is there continuity?

NO → **Repair open in RED/BLU wire between ECM (D3) and the KS.**

YES

Substitute a known-good KS and recheck.

Start the engine. Hold the engine at 3,000 rpm with no load (A/T in N or P position, (M/T in neutral) until the radiator fan comes on, then let it idle.

Hold the engine at 3,000–4,000 rpm for 10 seconds.

Is the MIL on and does it indicate code 23?

NO → **Replace the original KS.**

YES

Substitute a known-good ECM and recheck. If symptom/indication goes away, replace the original ECM.

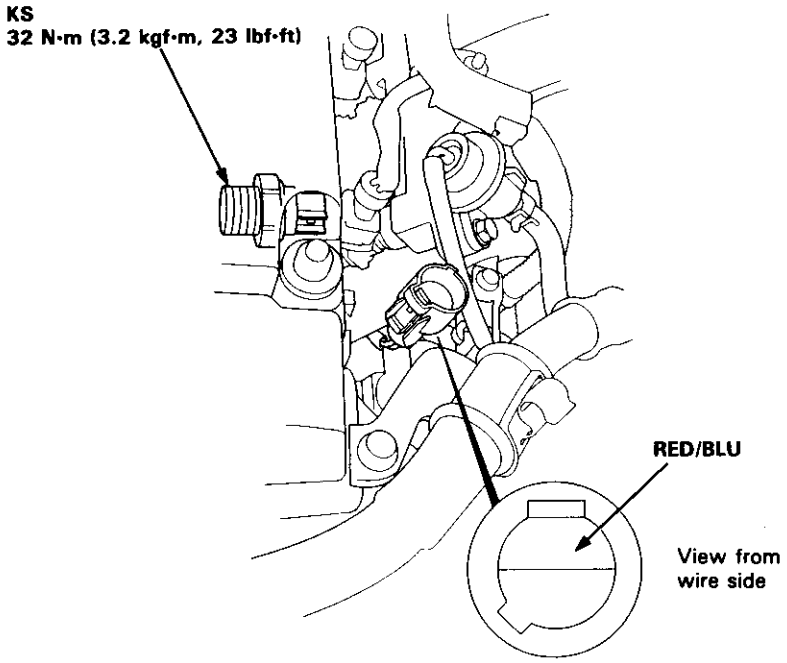

A/T FI Signal A/B (A/T only)

30 — The Malfunction Indicator Lamp (MIL) indicates Diagnostic Trouble Code (DTC) 30: A problem in the A/T FI Signal A circuit between Transmission Control Module (TCM) and ECM.

31 — The Malfunction Indicator Lamp (MIL) indicates Diagnostic Trouble Code (DTC) 31: A problem in the A/T FI Signal B circuit between Transmission Control Module (TCM) and ECM.

30 or 31

With the SCS short connector connected (see page 11-34), code 30 and/or 31 are indicated.

Do the ECM Reset Procedure (see page 11-35).

Test drive necessary.
Drive the car for several miles so that the transmission upshifts and downshifts several times.

Does the MIL indicate code 30 and/or 31?

NO → **Intermittent failure, system is OK at this time.**
Check for poor connections or loose wires at C419 (TCM) and ECM.

YES

Turn the ignition switch OFF.

Connect the test harness to the main harness only, not to the ECM (see page 11-37).

Disconnect the 22P connector from the TCM.

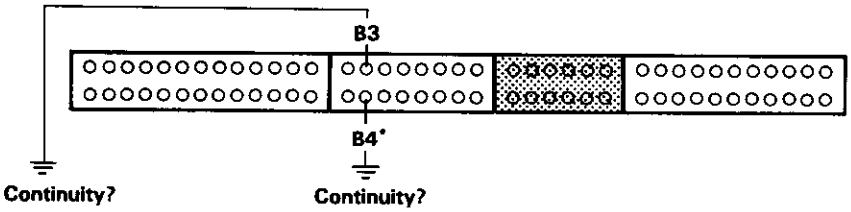

Check for continuity between B3 and/or B4* terminal and body ground.

*: code 31 (A/T FI signal B)

Is there continuity?

YES → **Repair short in GRN/BLU or GRY* wire between ECM (B3 or B4*) and the TCM.**

NO

(To page 11-77)

(From page 11-76)

Check for continuity on GRN/BLU or GRY* wire between B3 or B4* and 22P connector of the TCM.

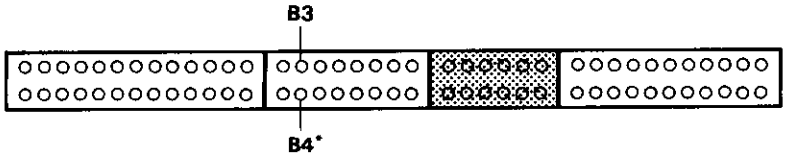

Is there continuity?

NO → **Repair open in GRN/BLU or GRY* wire between ECM (B3 or B4*) and the TCM.**

YES → **Substitute a known-good ECM and recheck. If symptom/indication goes away, replace the original ECM.**

Idle Control System

System Troubleshooting Guide

NOTE:

- Across each row in the chart, the sub-systems that could be sources of a symptom are ranked in the order they should be inspected, starting with ①. Find the symptom in the left column, read across to the most likely source, then refer to the page listed at the top of that column. If inspection shows the system is OK, try the next system ②, etc.
- If the idle speed is out of specification and the Malfunction Indicator Lamp (MIL) does not blink Diagnostic Trouble Code (DTC) 14, go to inspection described on page 11-81.

PAGE / SUB-SYSTEM / SYMPTOM		IDLE ADJUSTING SCREW	IDLE AIR CONTROL VALVE	AIR CONDI-TIONING SIGNAL	ALTER-NATOR FR SIGNAL	AUTOMATIC TRANSAXLE GEAR POSITION SIGNAL	BRAKE SWITCH SIGNAL	STARTER SWITCH SIGNAL	POWER STEERING PRESSURE SWITCH SIGNAL	FAST IDLE THERMO VALVE	HOSES AND CONNEC-TIONS
		11-95	11-82	11-84	11-86	11-88	11-90	11-92	11-93	11-94	–
DIFFICULT TO START ENGINE WHEN COLD								②		①	
WHEN COLD FAST IDLE OUT OF SPEC (1,000–2,000 rpm)		③	②							①	
ROUGH IDLE			②								①
WHEN WARM RPM TOO HIGH		③	①						③	②	③
WHEN WARM RPM TOO LOW	Idle speed is below specified rpm (no load)	②	①								
	Idle speed does not increase after initial start up.		①								
	On models with automatic transmission, the idle speed drops in gear		②			①					
	Idle speeds drops when air conditioner in ON		②	①							
	Idle speed drops when steering wheel is turning		②						①		
	Idle speed fluctuates with electrical load		②		③						①
FREQUENT STALLING	WHILE WARMING UP	②	①								
	AFTER WARMING UP	①	②								
FAILS EMISSION TEST											①

System Description

The idle speed of the engine is controlled by the Idle Air Control (IAC) Valve.
The valve changes the amount of air bypassing into the intake manifold in response to electric current controlled by the ECM. When the IAC Valve is activated, the valve opens to maintain the proper idle speed.

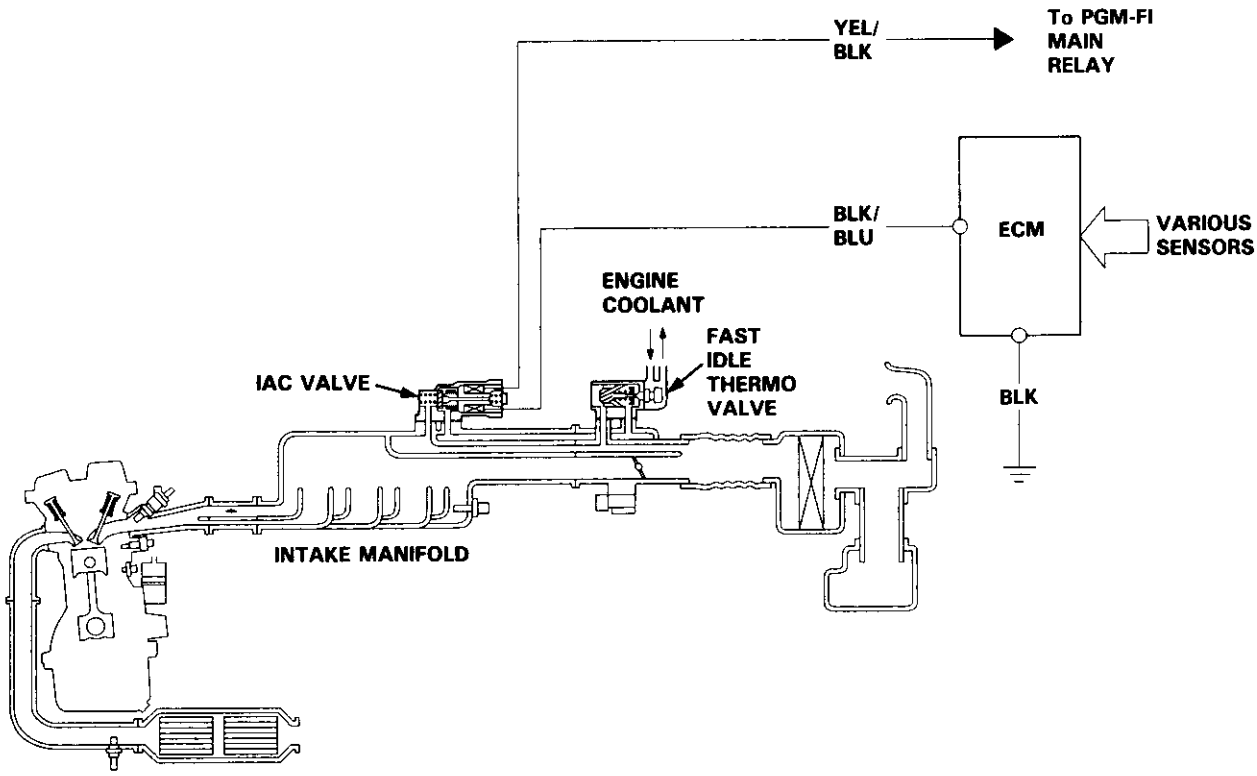

(cont'd)

System Description (cont'd)

1. After the engine starts, the IAC valve opens for a certain time. The amount of air is increased to raise the idle speed about 150—300 rpm.

2. When the coolant temperature is low, the IAC valve is opened to obtain the proper fast idle speed. The amount of bypassed air is thus controlled in relation to the engine coolant temperature.

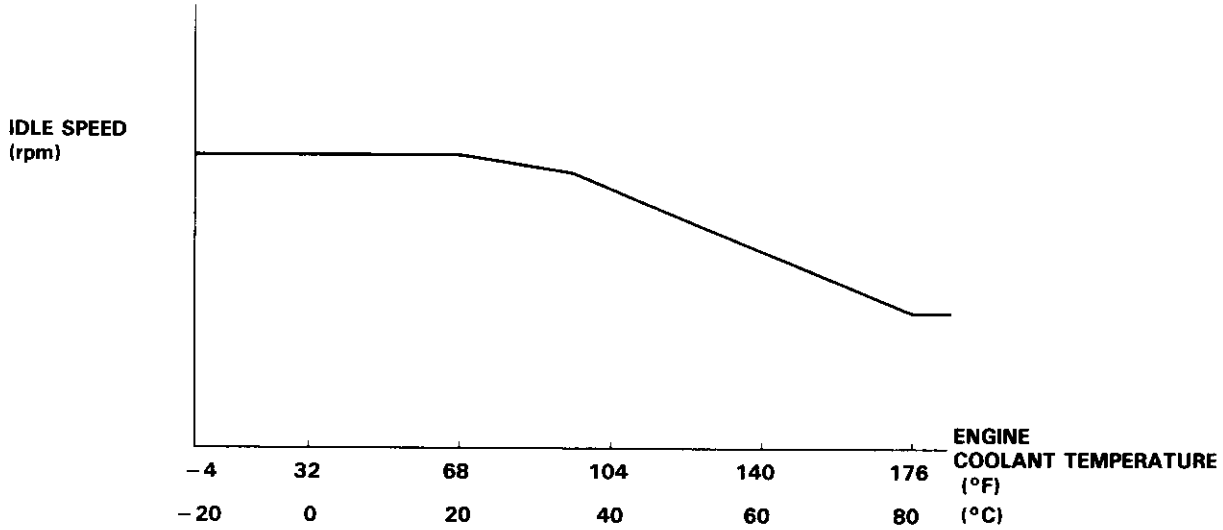

1. When the idle speed is out of specification and the Malfunction Indicator Lamp (MIL) does not blink Diagnostic Trouble Code (DTC) 14, check the following items:
   - Adjust the idle speed (see page 11-95)
   - Air conditioning signal (see page 11-84)
   - ALT FR signal (see page 11-86)
   - A/T gear position signal (see page 11-88)
   - Brake switch signal (see page 11-90)
   - Starter switch signal (see page 11-92)
   - PSP switch signal (see page 11-93)
   - Fast idle thermo valve (see page 11-94)
   - Hoses and connections
   - IAC valve and its mounting O-rings

2. If the above items are normal, substitute a known-good IAC valve and readjust the idle speed (see page 11-95).

   - If the idle speed still cannot be adjusted to specification (and the MIL does not blink code 14) after IAC valve replacement, substitute a known-good ECM and recheck. If symptom goes away, replace the original ECM.

Idle Control System

Idle Air Control (IAC) Valve

14 – The Malfunction Indicator Lamp (MIL) indicates Diagnostic Trouble Code (DTC) 14: A problem in the Idle Air Control (IAC) Valve circuit.

The IAC Valve changes the amount of air bypassing the throttle body in response to a current signal from the ECM in order to maintain the proper idle speed.

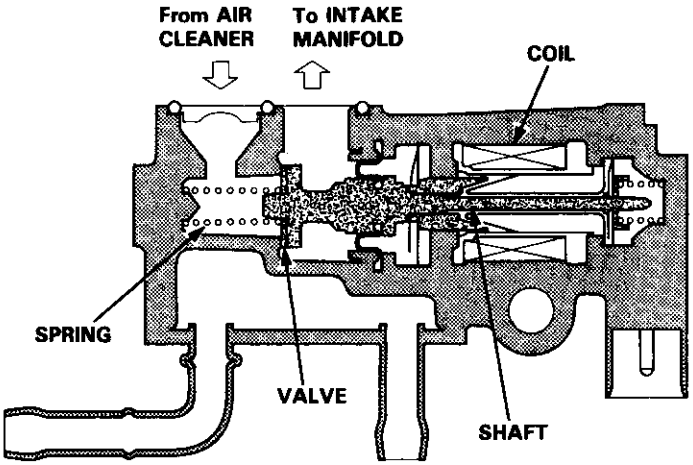

14

- **The MIL has been reported on.**
- **With the SCS short connector connected (see page 11-34), code 14 is indicated.**

Do the ECM Reset Procedure (see page 11-35).

Start the engine.

Is the MIL on and does it indicate code 14?

NO → With the engine running and the accelerator pedal released, disconnect the 2P connector from the IAC valve.

Is there a reduction in engine rpm?

YES → **Intermittent failure, system is OK at this time (test drive may be necessary). Check for poor connections or loose wires at C305 (located at left shock tower), C424, C116 (IAC valve) and ECM.**

NO → **Substitute a known-good IAC valve and retest.**

YES → Disconnect the 2P connector from the IAC valve.

(To page 11-83)

(From page 11-82)

Measure voltage between the YEL/BLK wire and body ground.

Is there battery voltage?

NO → **Repair open in YEL/BLK wire between IAC valve and PGM-FI main relay.**

YES

Turn the ignition switch off and reconnect the 2P connector to the IAC valve.

Connect the test harness "A" connector to the main wire harness only, not the ECM (see page 11-37).

Turn the ignition switch ON.

Momentarily connect A9 terminal to A23 terminal several times.

Does the IAC valve click?

YES → **Substitute a known-good ECM and retest. If symptom/indication goes away, replace the original ECM.**

NO

Repair open or short in BLK/BLU wire between IAC valve and ECM (A9). If the wire is OK, replace the IAC valve.

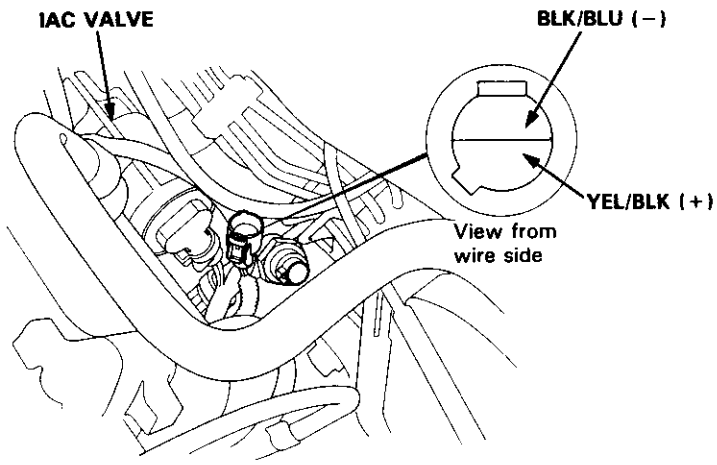

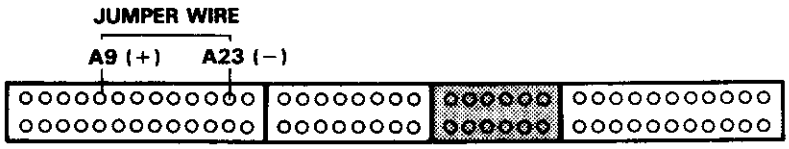

Idle Control System

Air Conditioning Signal

This signals the ECM when there is a demand for cooling from the air conditioning system.

Inspection of Air Conditioning Signal.

Connect the test harness between the ECM and connectors. Disconnect "B" connector from the main wire harness only, not the ECM (see page 11-37).

Turn the ignition switch ON.

Measure voltage between B5 (+) terminal and A26 (−) terminal.

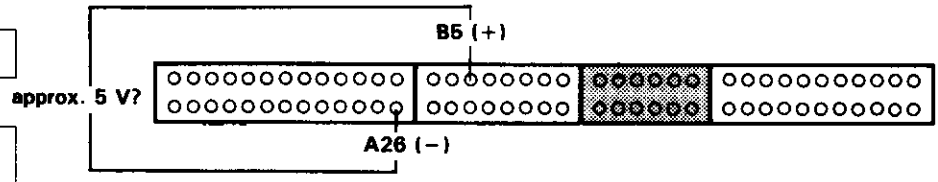

Is there approx. 5 V?

NO → **Substitute a known-good ECM and recheck. If prescribed voltage is now available, replace the original ECM.**

YES

Turn the ignition switch OFF.

Reconnect "B" connector to the main wire harness.

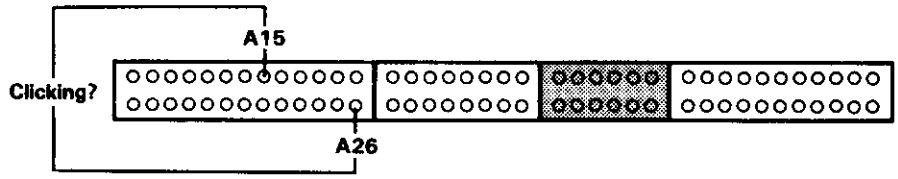

Turn the ignition switch ON.

Momentarily connect A15 terminal to A26 terminal several times.

Is there a clicking noise from the A/C compressor clutch?

NO → Momentarily connect the BLK/RED terminal of the 4P connector on the A/C clutch relay to body ground several times.

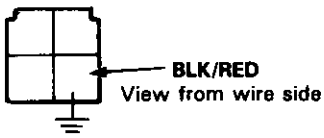

Is there a clicking noise from the A/C compressor clutch?

NO → **See air conditioner inspection (see section 22).**

YES → **Repair open in BLK/RED wire between ECM (A15) and A/C clutch relay.**

YES

Start the engine.

Blower switch ON.

(To page 11-85)

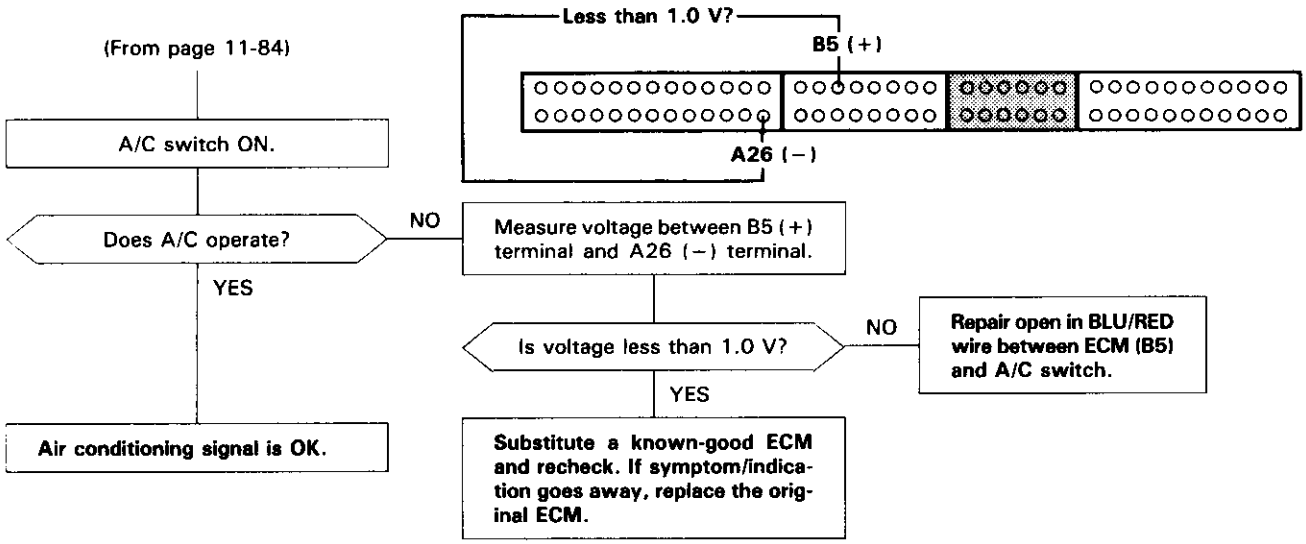
(From page 11-84)
A/C switch ON.
Does A/C operate?
NO
YES
Air conditioning signal is OK.
Less than 1.0 V?
B5 (+)
A26 (−)
Measure voltage between B5 (+) terminal and A26 (−) terminal.
Is voltage less than 1.0 V?
NO
YES
Repair open in BLU/RED wire between ECM (B5) and A/C switch.
Substitute a known-good ECM and recheck. If symptom/indication goes away, replace the original ECM.

Alternator (ALT) FR Signal

This signals the ECM when the Alternator (ALT) is charging.

Inspection of ALT FR Signal.

Connect the test harness between the ECM and connectors. Disconnect "D" connector from the main wire harness only, not the ECM (see page 11-37).

Turn the ignition switch ON.

Measure voltage between D9 (+) terminal and A26 (−) terminal.

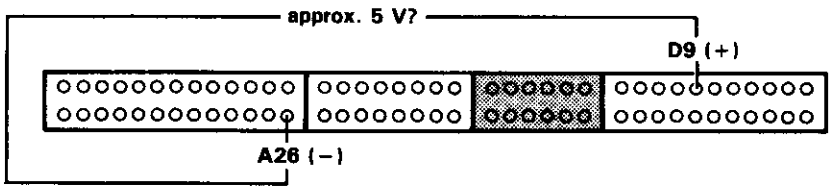

Is there approx. 5 V?

NO → **Substitute a known-good ECM and recheck. If prescribed voltage is now available, replace the original ECM.**

YES

Turn the ignition switch OFF.

Reconnect "D" connector to the main wire harness.

Start the engine. Hold the engine at 3,000 rpm with no load (A/T in [N] or [P] position, M/T in neutral) until the radiator fan comes on, then let it idle.

Measure voltage between D9 (+) terminal and A26 (−) terminal.

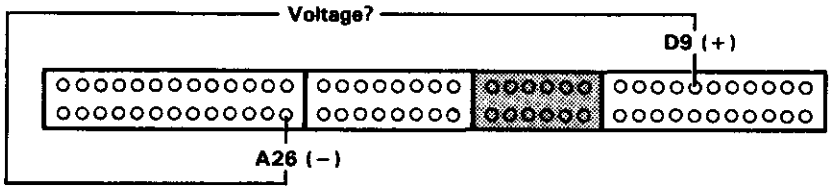

Does the voltage decrease when headlights and rear defogger are turned on?

NO → Turn the ignition switch OFF.

YES

ALT FR signal is OK.

(To page 11-87)

(From page 11-86)

Disconnect "D" connector from ECM only, not the main wire harness.

Disconnect the negative battery cable from the battery.

Check for continuity between D9 terminal and body ground.

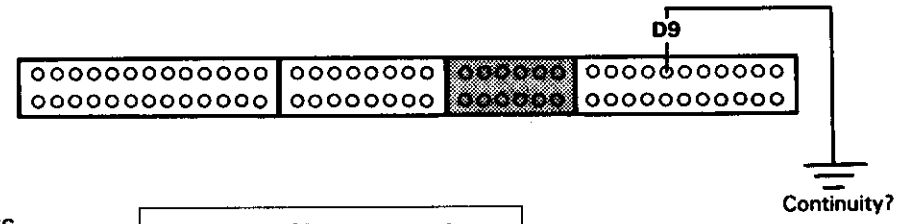

Is there continuity?

YES → Disconnect GRN connector from the alternator.

NO → Disconnect GRN connector from the alternator.

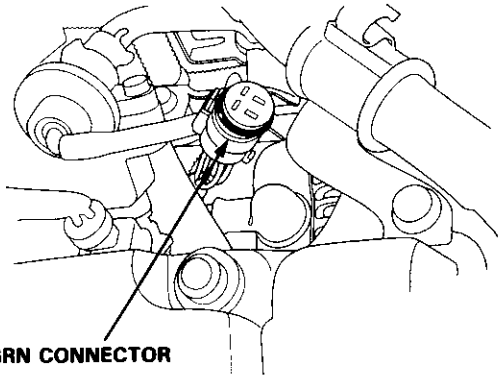

Connect WHT/RED wire to body ground.

Check for continuity between D9 terminal and body ground.

Is there continuity?

YES → **Repair open in WHT/RED wire between ECM (D9) and alternator.**

NO → **See ALT inspection (see section 23).**

Check for continuity between D9 terminal and body ground.

Is there continuity?

NO → **See ALT inspection (see section 23).**

YES → **Repair short in WHT/RED wire between ECM (D9) and ALT.**

Automatic Transaxle (A/T) Gear Position Signal (A/T only)

This signals the ECM when the transmission is in [N] or [P] position.

Inspection of A/T Gear Position Signal.

Turn the ignition switch ON.

Observe the A/T shift indicator and select each position separately.

Does the indicator light properly?

NO → **See A/T gear position indicator inspection (see section 14).**

YES

Turn the ignition switch OFF.

Connect the test harness between the ECM and connectors. Disconnect "B" connector from the main wire harness only, not the ECM (see page 11-37).

Turn the ignition switch ON.

Measure voltage between B7 (+) terminal and A26 (−) terminal.

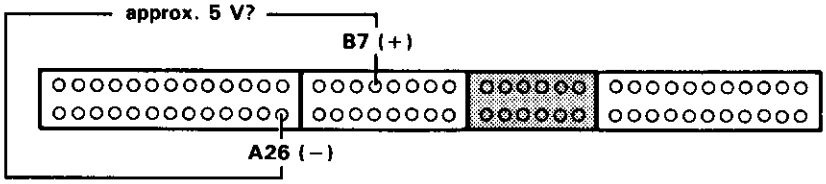

Is there approx. 5 V?

NO → **Substitute a known-good ECM and recheck. If prescribed voltage is now available, replace the original ECM.**

YES

Turn the ignition switch OFF.

Reconnect "B" connector to the main wire harness.

Start the engine.

(To page 11-89)

(From page 11-88)

Measure voltage between B7 (+) terminal and A26 (−) terminal with the transmission in [N] position.

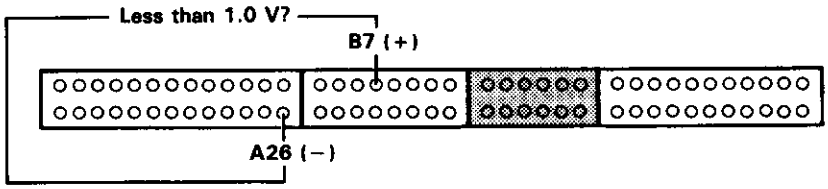

Is there less than 1.0 V?

NO

- Repair open in LT GRN/BLK wire between ECM (B7) and gauge assembly.
- Repair open in GRN wire between the gauge assembly and A/T gear position switch.

YES

Measure voltage between B7 (+) terminal and A26 (−) terminal with the transmission in [P] position.

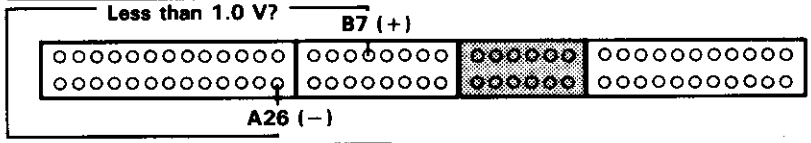

Is there less than 1.0 V?

NO

Repair open in GRN/WHT wire between gauge assembly and A/T gear position switch.

YES

Measure voltage between B7 (+) terminal and A26 (−) terminal with the transmission in gear.

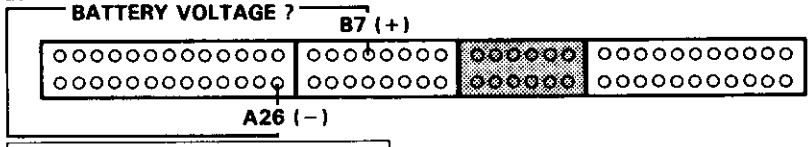

Is there battery voltage ?

NO

Repair short in LT GRN/BLK wire between ECM (B7) and gauge assembly.

YES

A/T gear position signal is OK.

Brake Switch Signal

This signals the ECM when the brake pedal is depressed.

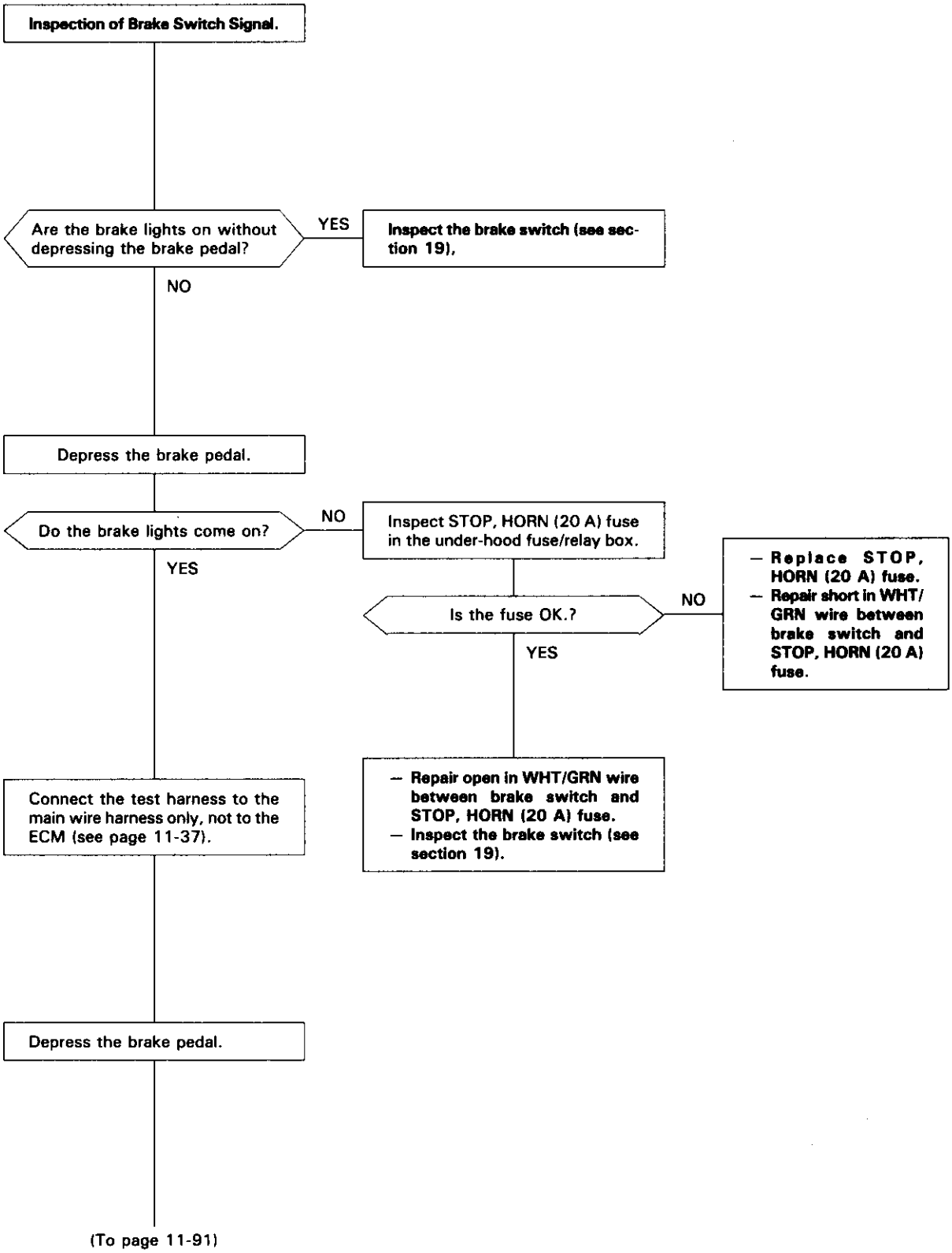

(From page 11-90)

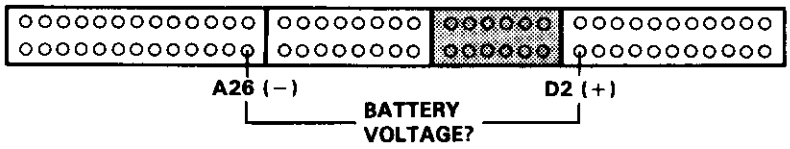

Measure voltage between D2 (+) terminal and A26 (−) terminal with the brake pedal depressed.

Is there battery voltage?

NO → **Repair open in GRN/WHT wire between the brake switch and ECM (D2).**

YES → **Brake switch signal is OK.**

Starter Switch Signal

This signals the ECM when the engine is cranking.

Inspection of Starter Switch Signal.

Connect the test harness between the ECM and connector (see page 11-37).

Measure voltage between B9 (+) terminal and A26 (−) terminal with the ignition switch in the start position.

Is there battery voltage?

NO → Inspect No. 18 STARTER SIGNAL (7.5 A) fuse in the under-dash fuse/relay box.

Is the fuse OK?

NO → **– Replace No. 18 STARTER SIGNAL (7.5 A) fuse.**
– Repair short in BLU/WHT wire between ECM (B9) and No. 18 STARTER SIGNAL (7.5 A) fuse, PGM-FI main relay.

YES → **Repair open in BLU/WHT wire between ECM (B9) and No. 18 STARTER SIGNAL (7.5 A) fuse.**

YES → **Starter switch signal is OK.**

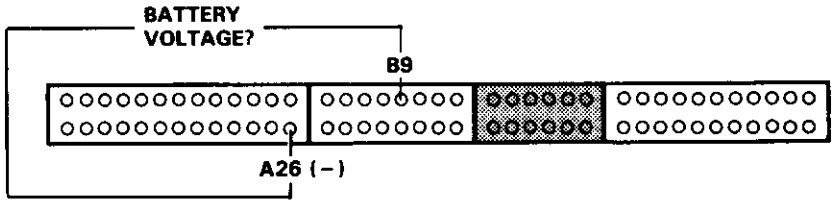

NOTE:
- M/T: Clutch pedal must be depressed.
- A/T: Transmission in [N] or [P] position.

Power Steering Pressure (PSP) Switch Signal

This signals the ECM when the power steering load is high.

Inspection of PSP switch signal.

Connect the test harness between the ECM and connectors (see page 11-37).

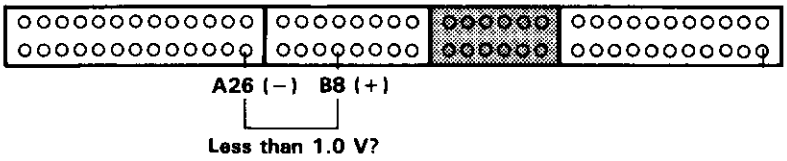

Turn the ignition switch ON.

Measure voltage between B8 (+) terminal and A26 (−) terminal.

Is there less than 1.0 V?

NO

Turn the ignition switch OFF.

Disconnect the 2P connector from the PSP switch.

Turn the ignition switch ON.

Connect GRN terminal to BLK terminal.

Is there less than 1.0 V?

YES

Replace the PSP switch.

NO

Repair open in GRN wire between ECM (B8) and PSP switch or BLK wire between PSP switch and G301 (located at left engine compartment).

YES

Start the engine.

Turn steering wheel slowly.

Measure voltage between B8 (+) terminal and A26 (−) terminal while steering wheel is turning.

Is there battery voltage?

NO

Disconnect the 2P connector from the PSP switch.

Is there battery voltage?

YES

Replace the PSP switch.

NO

Repair short in GRN wire between ECM (B8) and PSP switch. If wire is OK, substitute a known-good ECM and recheck. If prescribed voltage is now available, replace the original ECM.

YES

PSP switch signal is OK.

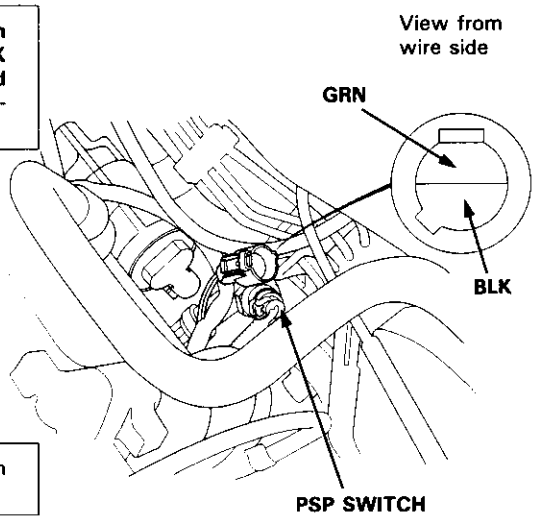

Fast Idle Thermo Valve

Description

To prevent erratic running when the engine is warming up, it is necessary to raise the idle speed. The fast idle thermo valve is controlled by a thermowax plunger. When the engine is cold, the engine coolant surrounding the thermowax contracts the plunger, allowing additional air to be bypassed into the intake manifold so that the engine idles faster. When the engine reaches operating temperature, the valve closes, reducing the amount of air bypassing into the manifold.

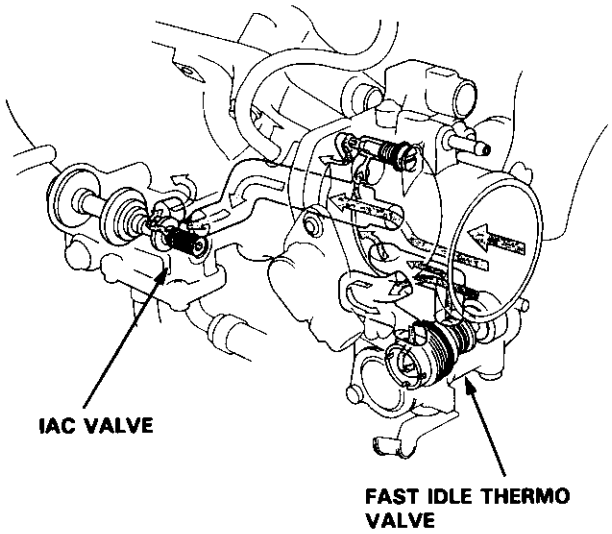

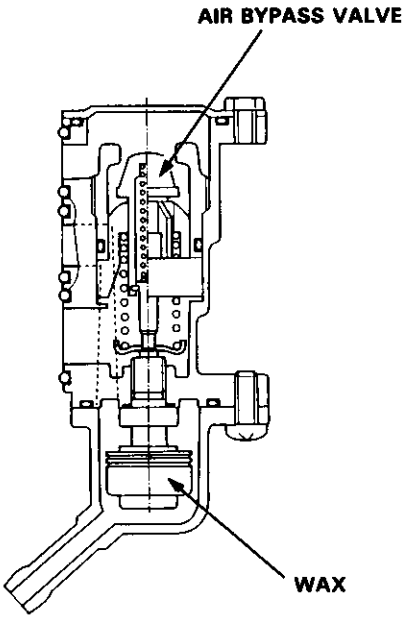

Inspection

NOTE: The fast idle thermo valve is factory adjusted; it should not be disassembled.

1. Remove the intake air duct from the throttle body.
2. Start the engine.
3. Put your finger over the lower port in throttle body and make sure that there is air flow with the engine cold (engine coolant temperature below 86°F, 30°C).

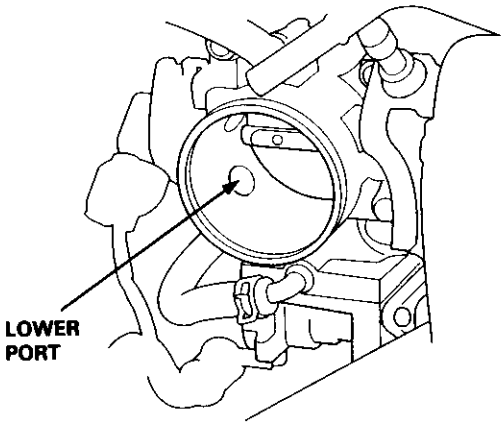

- If not, replace the fast idle thermo valve and retest.

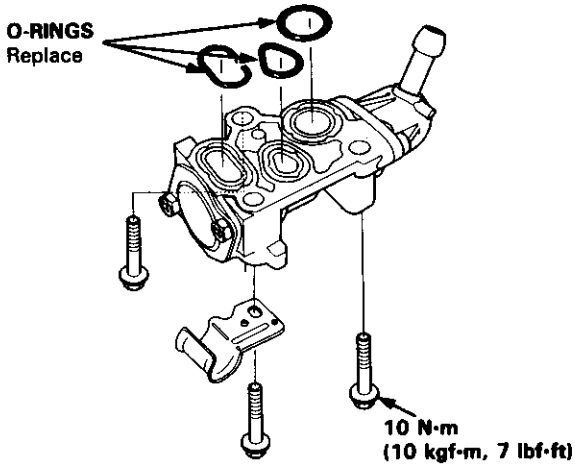

4. Start the engine. Hold the engine at 3.000 rpm with no load (A/T in [N] or [P] position, M/T in neutral) until the radiator fan comes on, then let it idle.
5. Check that valve is completely closed. If not, air suction can be felt at the lower port in the throttle body.
   - If any suction is felt, the valve is leaking. Check engine coolant level and for air in the engine coolant system (see section 10). If OK, replace the fast idle thermo valve and recheck.

Idle Speed Setting

Inspection/Adjustment

NOTE:
- When the idle speed set, check the following items:
  - The MIL has not been reported on.
  - Ignition timing
  - Spark plugs
  - Air cleaner
  - PCV system
- (Canada) Pull the parking brake lever up. Start the engine, then check that the headlights are off.

1. Start the engine. Hold the engine at 3,000 rpm with no load (A/T in [N] or [P] position, M/T in neutral) until the radiator fan comes on, then let it idle.

2. Connect a tachometer.

3. Disconnect the 2P connector from the Idle Air Control (IAC) valve.

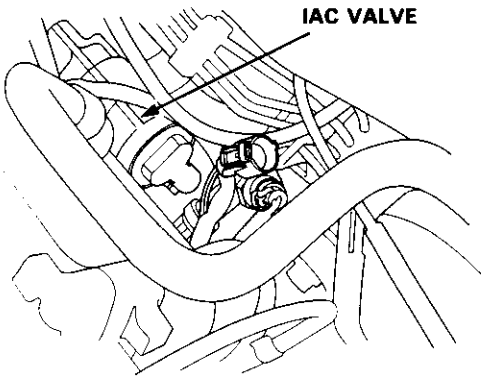

4. Start the engine with the accelerator pedal slightly depressed. Stabilize the rpm at 1,000, then slowly release the pedal until the engine idles.

5. Check idling in no-load conditions: headlights, blower fan, rear defogger, radiator fan, and air conditioner are not operating.

   Idle speed should be;

   B18B1 engine:

M/T	480 ± 50 rpm
A/T	480 ± 50 rpm (in [N] or [P] position)

   B18C1 engine: 480 ± 50 rpm

   Adjust the idle speed, if necessary, by turning the idle adjusting screw.

   NOTE: After adjust the idle speed in this step, check the ignition timing (see section 23).
   If it is out of spec, go back to step 4.

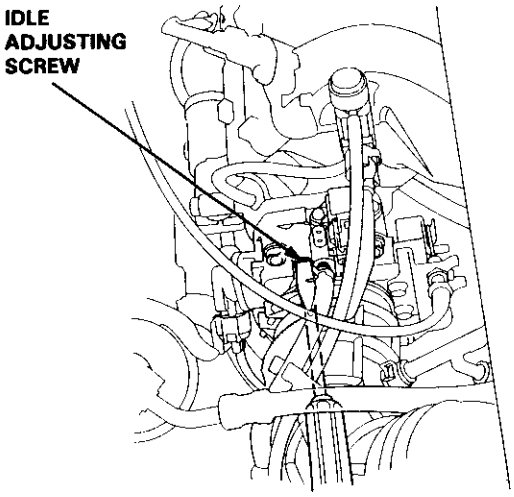

6. Turn the ignition switch OFF.

7. Reconnect the 2P connector on the IAC valve, then remove the BACK UP (7.5 A) fuse in the under-hood fuse/relay box for 10 seconds to reset the ECM.

8. Restart and idle the engine with no-load conditions for one minute, then check the idle speed.

   NOTE: (Canada) Pull the parking brake lever up. Start the engine, then check that the headlights are off.

   Idle speed should be;

   B18B1 engine:

M/T	750 ± 50 rpm
A/T	750 ± 50 rpm (in [N] or [P] position)

   B18C1 engine: 750 ± 50 rpm

(cont'd)

Idle Speed Setting (cont'd)

9. Idle the engine for one minute with headlights (Low) ON and check the idle speed.

   Idle speed should be;

   B18B1 engine:

M/T	750 ± 50 rpm
A/T	750 ± 50 rpm (in N or P position)

   B18C1 engine: 750 ± 50 rpm

10. Turn the headlights off.
    Idle the engine for one minute with heater fan switch at HI and air conditioner on, then check the idle speed.

    Idle speed should be;

    B18B1 engine:

M/T	820 ± 50 rpm
A/T	840 ± 50 rpm (in N or P position)

    B18C1 engine: 850 ± 50 rpm

    NOTE: If the idle speed is not within specification, see System Troubleshooting Guide on page 11-78.

Fuel Supply System

System Troubleshooting Guide

NOTE: Across each row in the chart, the sub-systems that could be sources of a symptom are ranked in the order they should be inspected starting with ①. Find the symptom in the left column, read across to the most likely source, then refer to the page listed at the top of that column. If inspection shows the system is OK, try the next most likely system ②, etc.

PAGE / SUB-SYSTEM		FUEL LINES	FUEL INJECTOR	FUEL PRESSURE REGULATOR	FUEL FILTER	FUEL PUMP	PGM-FI MAIN RELAY	CONTAM-INATED FUEL
SYMPTOM		11-98	11-102	11-106	11-108	11-109	11-111	–
ENGINE WON'T START					③	①	②	
DIFFICULT TO START ENGINE WHEN COLD OR HOT					①	②		
ROUGH IDLE			①					②
POOR PER-FORMANCE	MISFIRE OR ROUGH RUNNING		①	③				②
	FAILS EMISSION TEST		②	①				
	LOSS OF POWER		③		②	①		
FREQUENT STALLING	WHILE WARMING UP			①				
	AFTER WARMING UP			①				

Fuel Lines

NOTE: Check all fuel system lines and hoses for damage, leaks or deterioration, and replace if necessary.

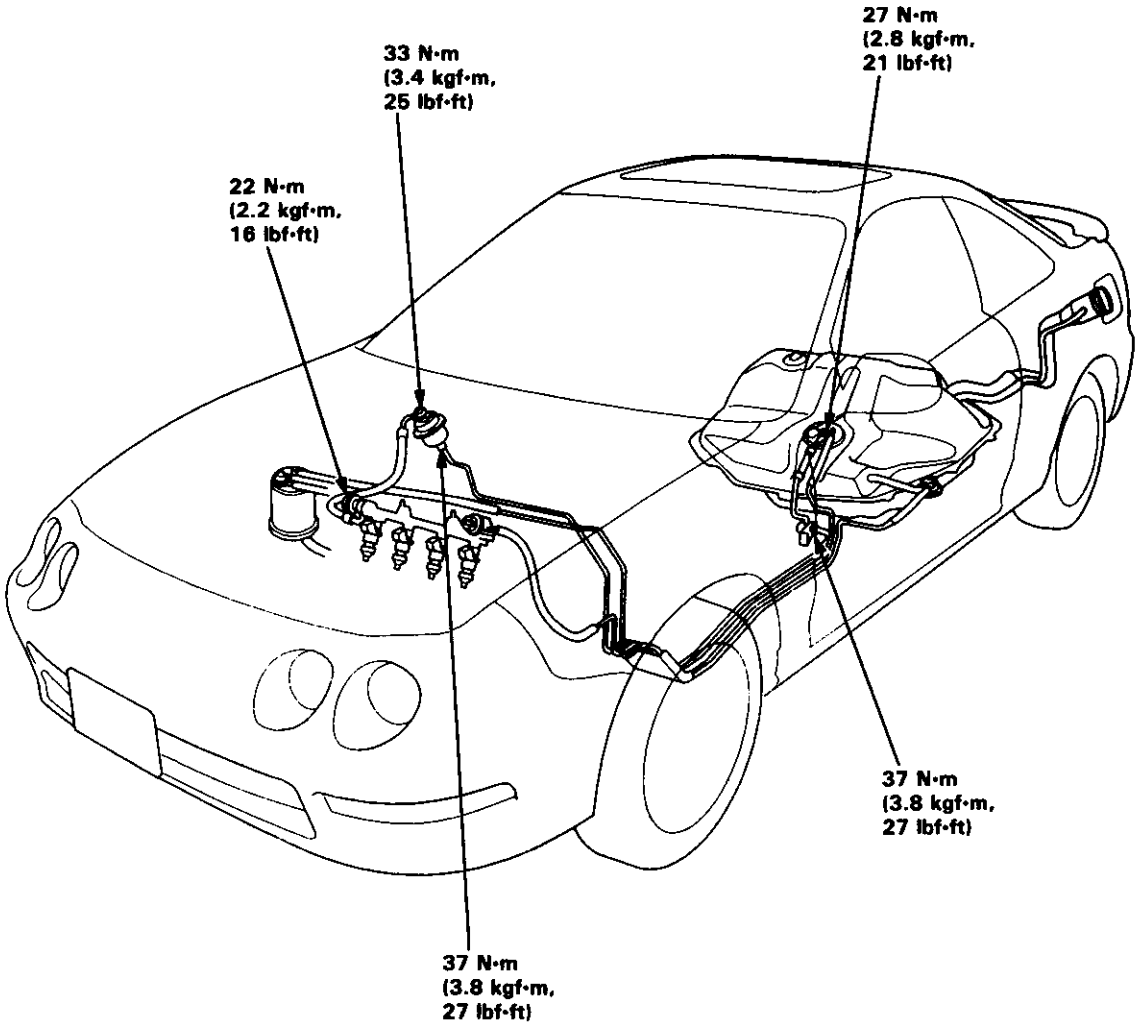

NOTE: Check all hose clamps and retighten if necessary.

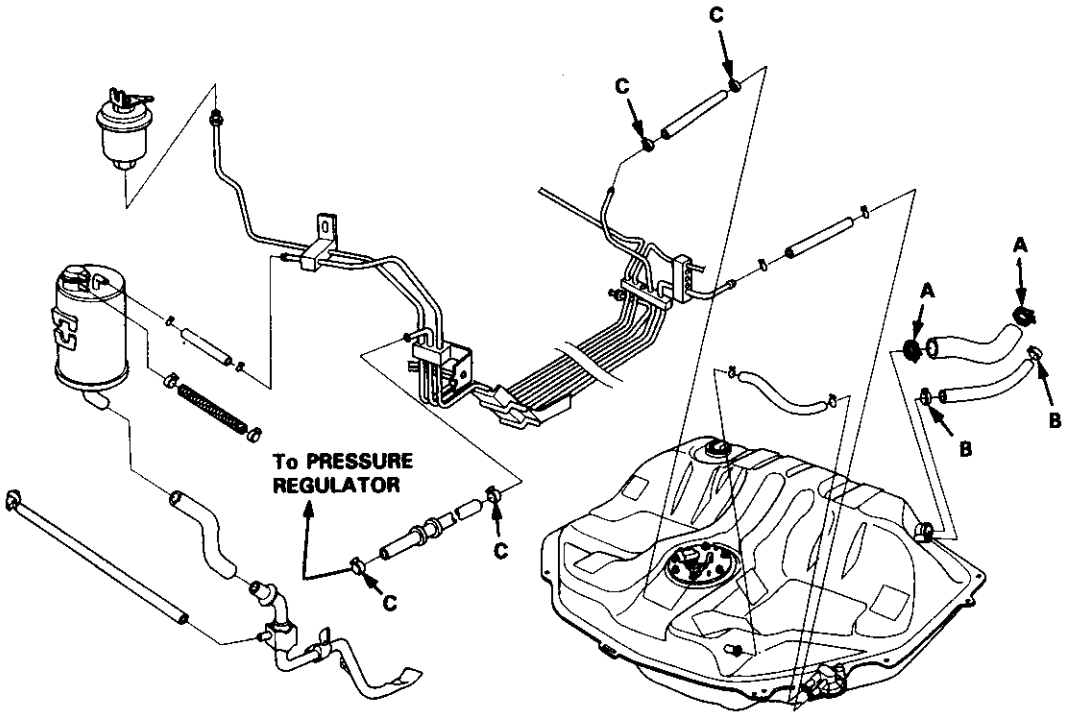

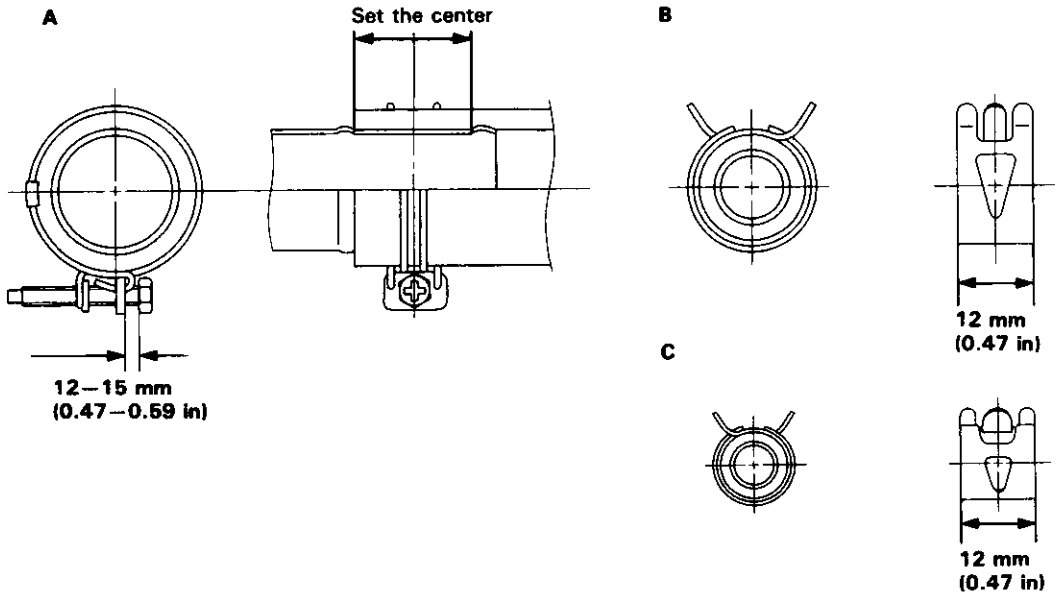

Fuel Supply System

System Description

The fuel supply system consists of a fuel tank, in-tank high presssure fuel pump, PGM-FI main relay, fuel filter, fuel pressure regulator, fuel injectors, fuel pulsation damper and fuel delivery and return lines. This system delivers pressure-regulatored fuel to the fuel injectors and cuts the fuel delivery when the engine is not running.

Fuel Pressure

Relieving

⚠ WARNING

- **Do not smoke while working on the fuel system. Keep open flames or sparks away from your work area.**
- **Be sure to relieve fuel pressure while the engine is off.**

NOTE: Before disconnecting fuel pipes or hoses, release pressure from the system by loosening the 6 mm service bolt on top of the fuel filter.

1. Disconnect the battery negative cable from the battery negative terminal.

   NOTE: The LS and GS-R model radio may have a coded theft protection circuit. Be sure to get the customer's code number before disconnecting the battery.
   After service, reconnect power to the radio and turn it on. When the word "CODE" is displayed, enter the customer's 5-digit code to restore radio operation.

2. Remove the fuel fill cap.

3. Use a box end wrench on the 6 mm service bolt at the fuel filter, while holding the special banjo bolt with another wrench.

4. Place a rag or shop towel over the 6 mm service bolt.

5. Slowly loosen the 6 mm service bolt one complete turn.

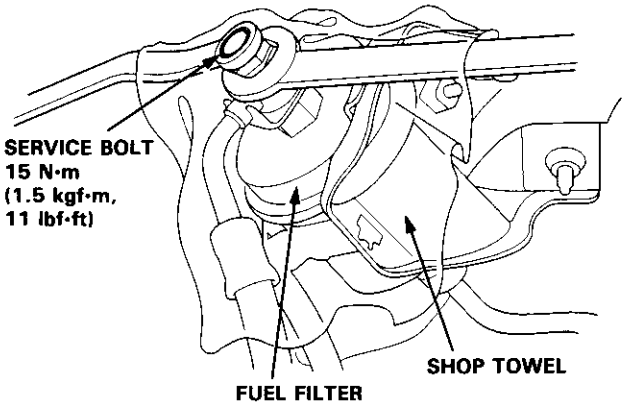

NOTE:
- A fuel pressure gauge can be attached at the 6 mm service bolt hole.
- Always replace the washer between the service bolt and the special banjo bolt, whenever the service bolt is loosened.
- Replace all washers whenever the bolts are removed.

Inspection

1. Relieve fuel pressure (see page 11-100)

2. Remove the service bolt on the fuel filter while holding the banjo bolt with another wrench. Attach the special tool

3. Start the engine. * Measure the fuel pressure with the engine idling and vacuum hose of the fuel pressure regulator disconnected from the fuel pressure regulator and pinched.

   Pressure should be;
   B18B1 engine:
   275–324 kPa (2.8–3.3 kgf/cm², 40–47 psi)

   B18C1 engine:
   329–378 kPa (3.35–3.85 kgf/cm², 48–55 psi)

4. Reconnect vacuum hose to the fuel pressure regulator.

   Pressure should be;
   B18B1 engine:
   216–245 kPa (2.2–2.5 kgf/cm², 31–36 psi)

   B18C1 engine:
   270–319 kPa (2.75–3.25 kgf/cm², 39–46 psi)

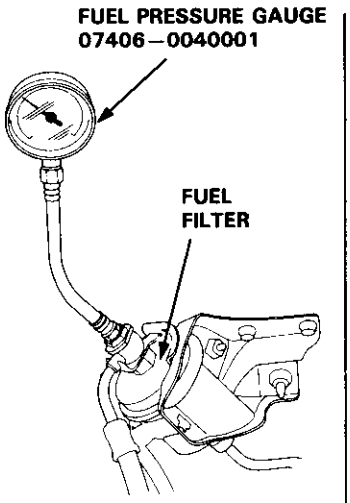

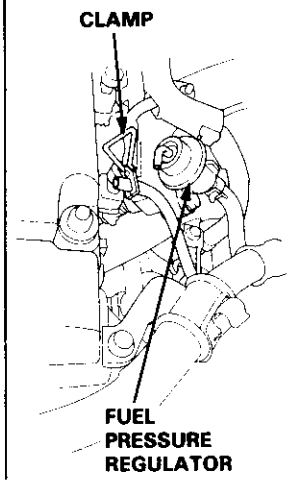

*: If the engine will not start, turn the ignition switch on, wait for two seconds, turn it off, then back on again and read the fuel pressure.

- If the fuel pressure is not as specified, first check the fuel pump (see page 11-110). If the fuel pump is OK, check the following:

– If the fuel pressure is higher than specified, inspect for:
  - Pinched or clogged fuel return hose or line.
  - Faulty fuel pressure regulator (see page 11-106)

– If the fuel pressure is lower than specified, inspect for:
  - Clogged fuel filter.
  - Faulty fuel pressure regulator (see page 11-106).
  - Leakage in the fuel line.

Fuel Injectors

The Malfunction Indicator Lamp (MIL) indicates Diagnostic Trouble Code (DTC) 16: A problem in the Fuel Injector circuit.

The Fuel Injectors are a solenoid-actuated constant-stroke pintle type consisting of a solenoid, plunger needle valve and housing. When current is applied to the solenoid coil, the valve lifts up and pressurized fuel is injected. Because the needle valve lift and the fuel pressure are constant, the injection quantity is determined by the length of time that the valve is open (i.e., the duration the current is supplied to the solenoid coil). The Fuel Injector is sealed by an O-ring and seal ring at the top and bottom. These seals also reduce operating noise.

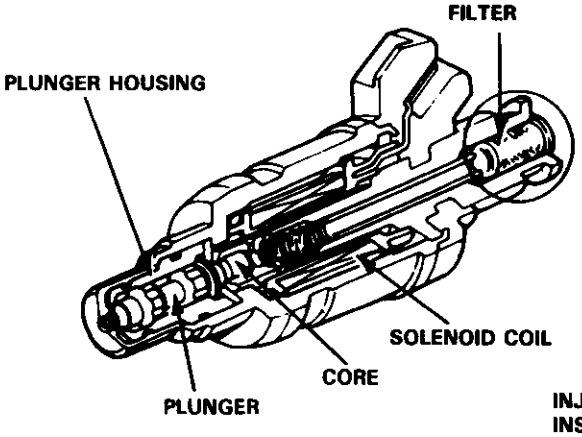

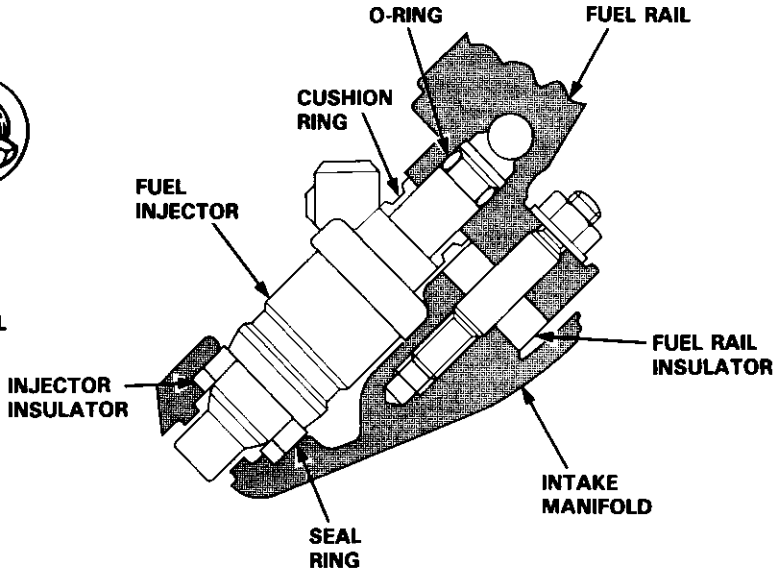

16

- **The MIL has been reported on.**
- **With the SCS short connector conected (see page 11-34), code 16 is indicated.**

Do the ECM Reset Procedure (see page 11-35).

Start the engine and allow it to idle.

NOTE: If engine will not start, it may take 10 seconds of cranking to set the code.

Is the MIL on and does it indicate code 16?

NO → **Intermittent failure, system is OK at this time (test drive may be necessary).**
Check for poor connections or loose wires at C221 (located at right shock tower), C121, C122, C123, C124 (fuel injectors), and ECM.

YES

(To page 11-103)

(From page 11-102)

Start the engine and listen at each fuel injector for a clicking sound.

Turn the ignition switch OFF.

Disconnect the 2P connector from the fuel injector that does not click.

Measure resistance between the 2 terminals of fuel injector.

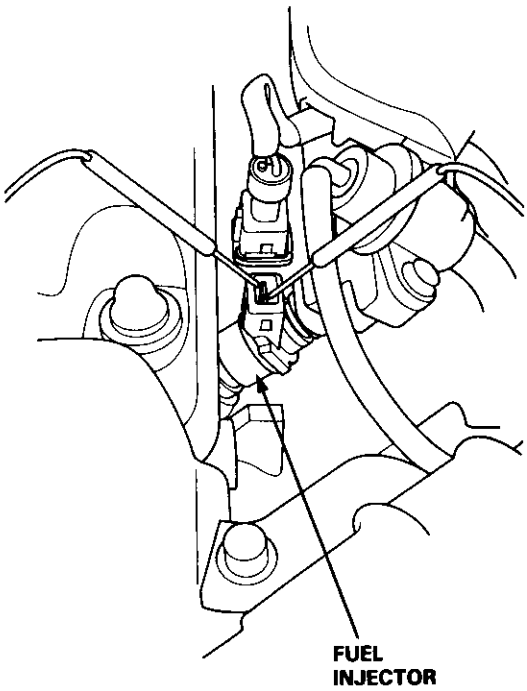

Is there 10–13 Ω?

NO → **Replace the fuel injector/injectors that are not 10–13 Ω.**

YES

Turn the ignition switch ON.

Measure voltage between YEL/BLK (+) terminal in the 2P connector and body ground.

Is there battery voltage?

NO → **Repair open in the YEL/BLK wire between the fuel injector and the PGM- FI main relay.**

YES

(To page 11-104)

(cont'd)

Fuel Injectors (cont'd)

(From page 11-103)

Turn the ignition switch OFF.

Reconnect the 2P connector to the fuel injector.

Connect the test harness between the ECM and connectors (see page 11-37).

Turn the ignition switch ON.

Measure voltage between A23 (−) terminal and following terminal:
- No. 1 fuel injector: A1 (+) terminal.
- No. 2 fuel injector: A3 (+) terminal.
- No. 3 fuel injector: A5 (+) terminal.
- No. 4 fuel injector: A2 (+) terminal.

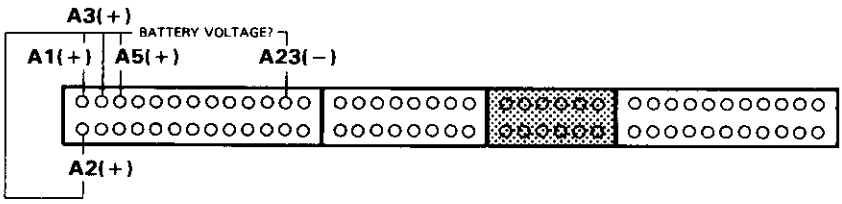

Is there battery voltage?

NO → **Repair open in the wire between the ECM (A1, A3, A5 or A2) and the fuel injector.**

YES → **Substitute a known-good ECM and recheck. If symptom/indication goes away, replace the original ECM.**

Replacement

⚠ WARNING Do not smoke during the work. Keep open flames away from your work area.

1. Relieve fuel pressure (see page 11-100).
2. Disconnect the connectors from the fuel injectors.
3. Disconnect the vacuum hose and fuel return hose from the fuel pressure regulator.

   NOTE: Place a rag or shop towel over the hoses before disconnecting them.
4. Loosen the retainer nuts on the fuel rail and harness holder.
5. Disconnect the fuel rail.
6. Remove the fuel injectors from the intake manifold.

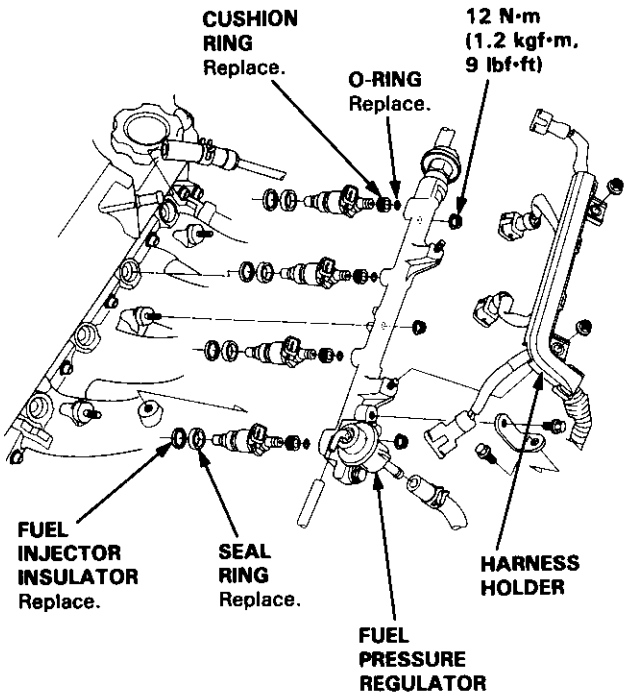

7. Slide new cushion rings onto the fuel injectors.
8. Coat new O-rings with clean engine oil and put them on the fuel injectors.
9. Insert the injectors into the fuel rail first.
10. Coat new seal rings with clean engine oil and press them into the intake manifold.
11. Install the fuel injectors and fuel rail assembly in the intake manifold.

    CAUTION: To prevent damage to the O-rings, install the fuel injectors in the fuel rail first, then install them in the intake manifold.

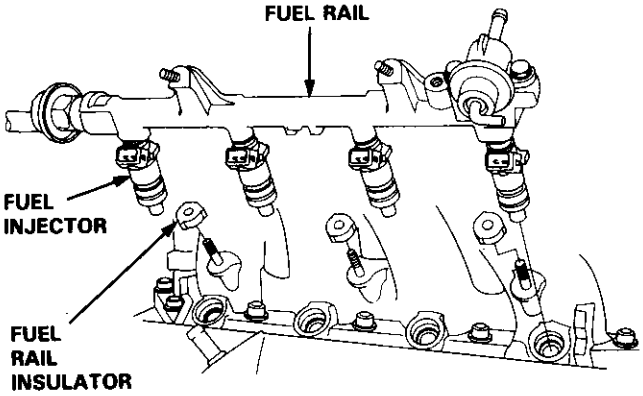

12. Align the center line on the connector with the mark on the fuel rail.

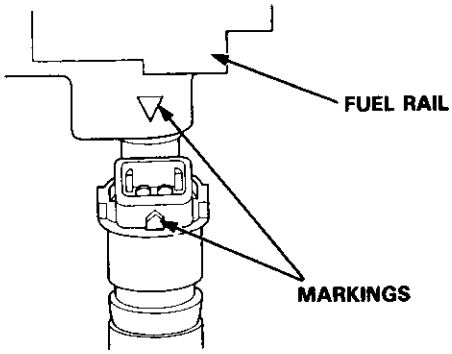

13. Install and tighten the retainer nuts.
14. Connect the vacuum hose and fuel return hose to the fuel pressure regulator.
15. Install the connectors on the fuel injectors.
16. Turn the ignition switch ON, but do not operate the starter. After the fuel pump runs for approximately two seconds, the fuel pressure in the fuel line rises. Repeat this two or three times, then check whether there is any fuel leakage.

Fuel Pressure Regulator

Description

The fuel pressure regulator maintains a constant fuel pressure to the fuel injectors. When the difference between the fuel pressure and manifold pressure exceeds 3.0 kgf/cm² (294 kPa, 43 psi) [B18C1 engine: 3.5 kgf/cm² (343 kPa, 50 psi)], the diaphragm is pushed upward, and the excess fuel is fed back into the fuel tank through the return line.

CLOSE:

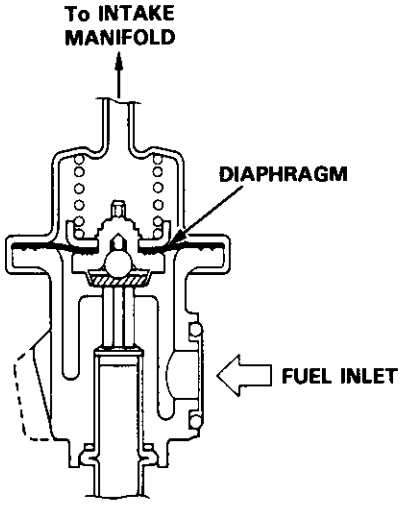

OPEN:

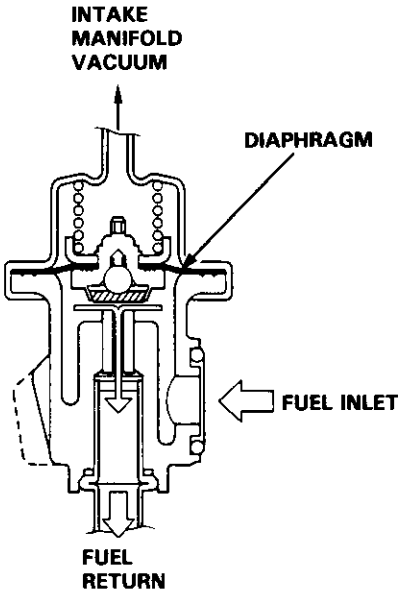

Testing

⚠ WARNING Do not smoke during the test. Keep open flames away from your work area.

1. Attach a fuel pressure gauge to the service port of the fuel filter (see page 11-101).

   Pressure should be;
   B18B1 engine:
   275–324 kPa (2.8–3.3 kgf/cm², 40–47 psi)
   B18C1 engine:
   329–378 kPa (3.35–3.85 kgf/cm², 48–55 psi)
   (with the fuel pressure regulator vacuum hose disconnected and pinched)

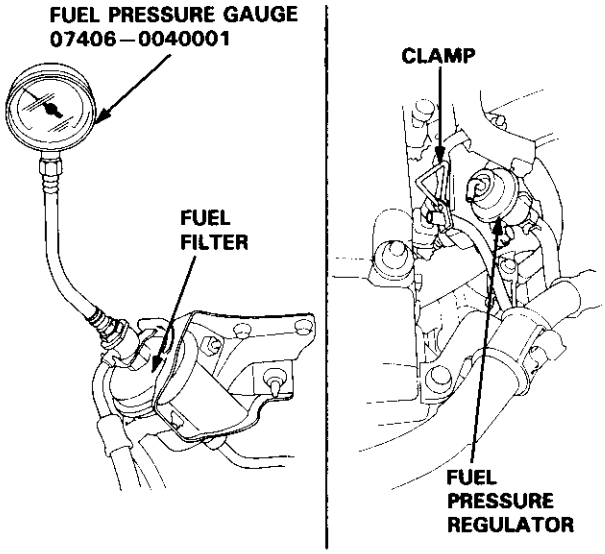

2. Reconnect the vacuum hose to the fuel pressure regulator.

3. Check that the fuel pressure rises when the vacuum hose from the fuel pressure regulator is disconnected again.

   - If the fuel pressure did not rise, replace the fuel pressure regulator.

Replacement

⚠ WARNING Do not smoke while working on fuel system. Keep open flame away from your work area.

1. Place a shop towel under the fuel pressure regulator, then relieve fuel pressure (see page 11-100).

2. Disconnect the vacuum hose and fuel return hose.

3. Remove the two 6 mm retainer bolts.

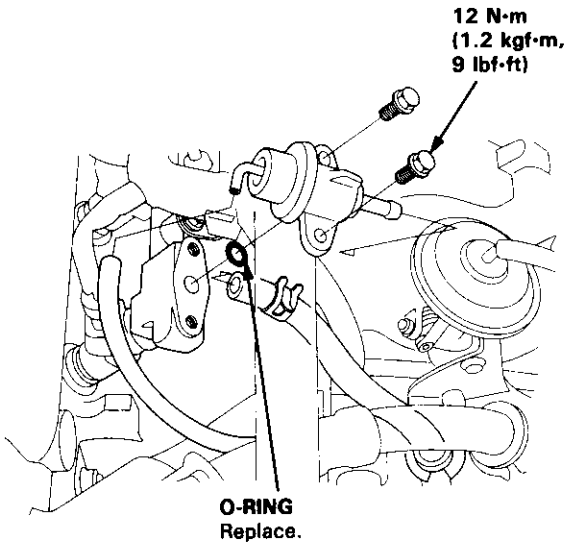

NOTE:
- Replace the O-ring.
- When assembling the fuel pressure regulator, apply clean engine oil to the O-ring and assemble it into its proper position, taking care not to damage the O-ring.

Fuel Filter

Replacement

⚠ WARNING

- **Do not smoke while working on fuel system. Keep open flame away from your work area.**
- **While replacing the fuel filter, be careful to keep a safe distance between battery terminals and any tools.**

The fuel filter should be replaced every 4 years or 60,000 miles (96,000 km), whichever comes first, or whenever the fuel pressure drops below the specified value [275–324 kPa, 2.8–3.3 kgf/cm², 40–47 psi (B18C1 engine: 329–378 kPa, 3.35–3.85 kgf/cm², 48–55 psi) with the fuel pressure regulator vacuum hose disconnected] after making sure that the fuel pump and the fuel pressure regulator are OK.

1. Disconnect the battery negative cable from the battery negative terminal.

   NOTE: The LS and GS-R model radio may have a coded theft protection circuit. Be sure to get the customer's code number before disconnecting the battery.
   After service, reconnect power to the radio and turn it on. When the word "CODE" is displayed, enter the customer's 5-digit code to restore radio operation.

2. Place a shop towel under and around the fuel filter.

3. Relieve fuel pressure (see page 11-100).

4. Remove the special banjo bolt and the fuel feed pipe from the fuel filter.

5. Remove the fuel filter clamp and fuel filter.

6. When assembling, use new washers, as shown.

   NOTE: Clean the flared joint of high pressure hoses thoroughly before reconnecting them.

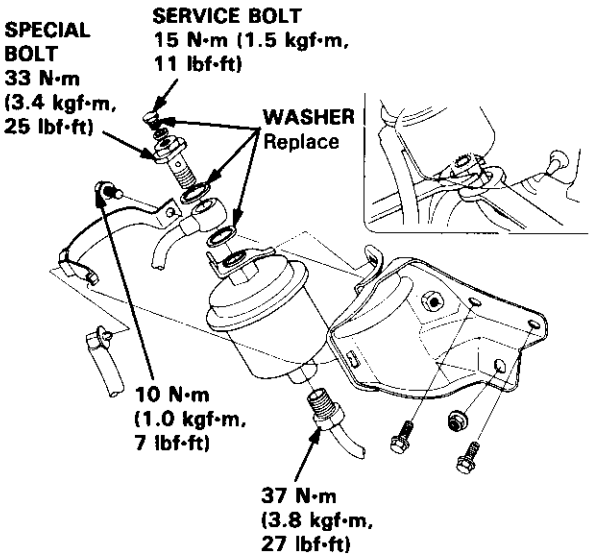

Fuel Pump

Description

Because of its compact impeller design, the fuel pump is installed inside the fuel tank, thereby saving space and simplifying the fuel line system.

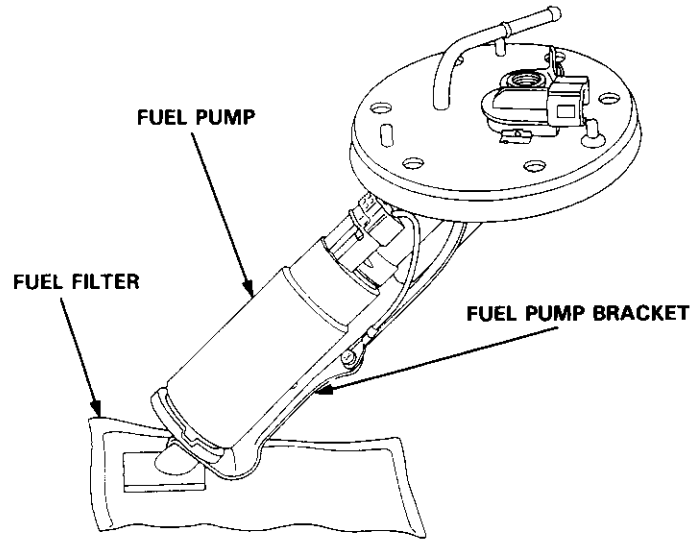

FUEL PUMP CROSS SECTION (Side view)

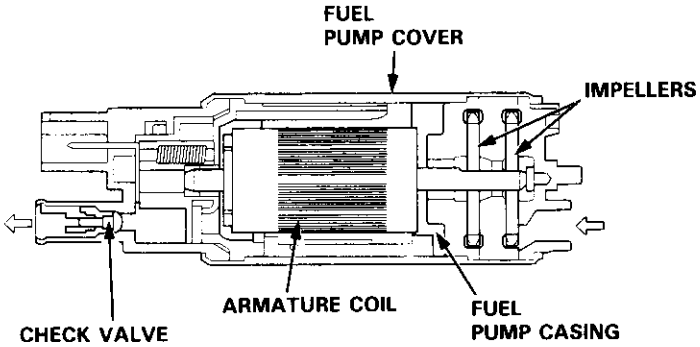

FUEL PUMP ASSEMBLY CROSS SECTION (Top view)

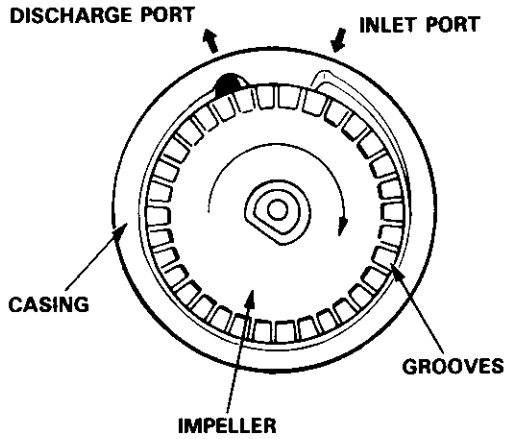

The fuel pump consists of a DC motor, a circumference flow pump, a relief valve for protecting the fuel line systems, a check valve for retaining residual pressure, an inlet port, and a discharge port. The fuel pump assembly consists of the impellers (driven by the motor), the fuel pump casing (which forms the pumping chamber), and the fuel pump cover.

OPERATION

(1) When the engine is started, the PGM-FI main relay actuates the fuel pump, and the motor turns together with the impellers.
Differential pressure is generated by the numerous grooves around the impellers.

(2) Fuel entering the inlet port flows inside the motor from the pumping chamber and is forced through the discharge port via the check valve.
If fuel flow is obstructed at the discharge side of the fuel line, the relief valve will open to bypass the fuel to the inlet port and prevent excessive fuel pressure.

(3) When the engine stops, the fuel pump stops automatically. However, a check valve closes by gravity to retain the residual pressure in the line, helping the engine to restart more easily.

(cont'd)

Fuel Pump (cont'd)

Testing

⚠ WARNING Do not smoke during the test. Keep open flame away from your work area.

If you suspect a problem with the fuel pump, check that the fuel pump actually runs; when it is ON, you will hear some noise if you hold your ear to the fuel fill port with the fuel fill cap removed. The fuel pump should run for two seconds, when ignition switch is first turned on. If the fuel pump does not make noise, check as follows:

1. Remove the rear seat (see section 20).
2. Remove the access panel.
3. Disconnect the 2P connector from the fuel pump.

   CAUTION: Be sure to turn the ignition switch OFF before disconnecting the wires.

4. Connect the BLK/YEL ⑤ wire and YEL/GRN ④ wire with a jumper wire at the PGM-FI main relay connector.

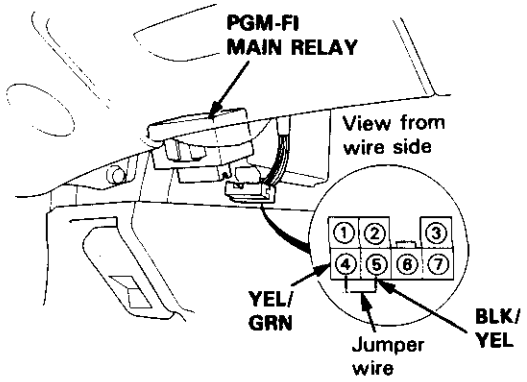

5. Check that battery voltage is available at the fuel pump connector when the ignition switch is turned ON (positive probe to the YEL/GRN wire, negative probe to the BLK/WHT wire).

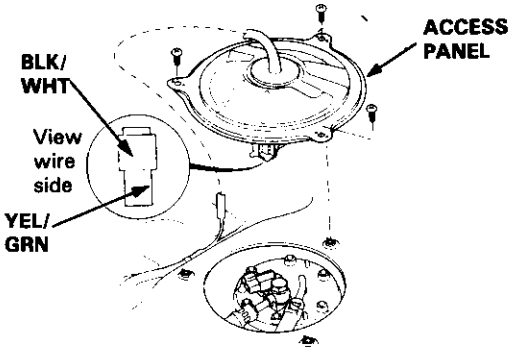

- If battery voltage is available, replace the fuel pump.
- If there is no voltage, check the fuel pump ground and wire harness (see page 11-112).

Replacement

⚠ WARNING Do not smoke while working on fuel system. Keep open flames away from your work area.

1. Remove the rear seats (see section 20).
2. Remove the access panel.
3. Disconnect the 2P connector from the fuel pump.
4. Remove the fuel pump mounting nuts.
5. Remove the fuel pump from the fuel tank.
6. Install a new washer on the banjo bolt, then install parts in the reverse order of removal.

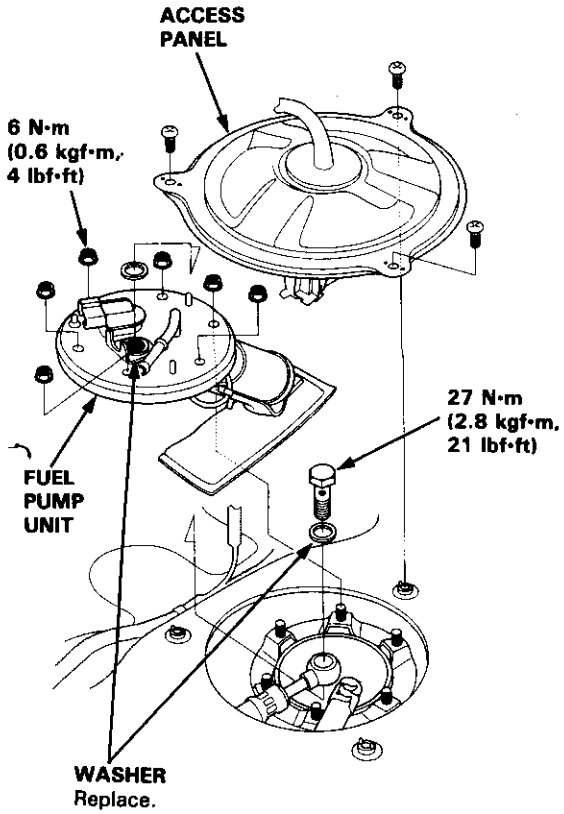

PGM-FI Main Relay

Description

The PGM-FI main relay actually contains two individual relays.

This relay is located at the left side of the cowl.

One relay is energized whenever the ignition is on which supplies the battery voltage to the ECM, power to the fuel injectors, and power for the second relay.

The second relay is energized for 2 seconds when the ignition is switched on, and when the engine is running, to supply power to the fuel pump.

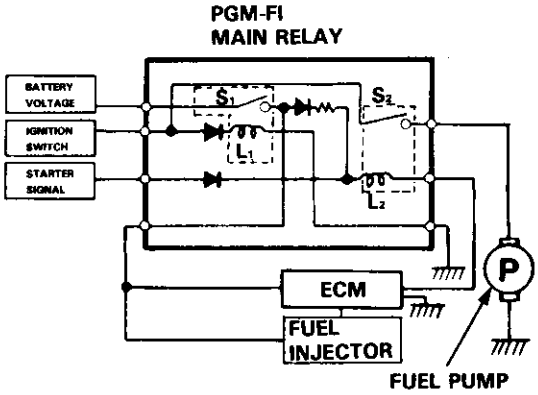

Relay Testing

NOTE: If the car starts and continues to run, the PGM-FI main relay is OK.

1. Remove the PGM-FI main relay.

2. Attach the battery positive terminal to the No. 2 terminal and the battery negative terminal to the No. 1 terminal of the PGM-FI main relay. Then check for continuity between the No. 5 terminal and No. 4 terminal of the PGM-FI main relay.

   - If there is continuity, go on to step 3.
   - If there is no continuity, replace the PGM-FI main relay and retest.

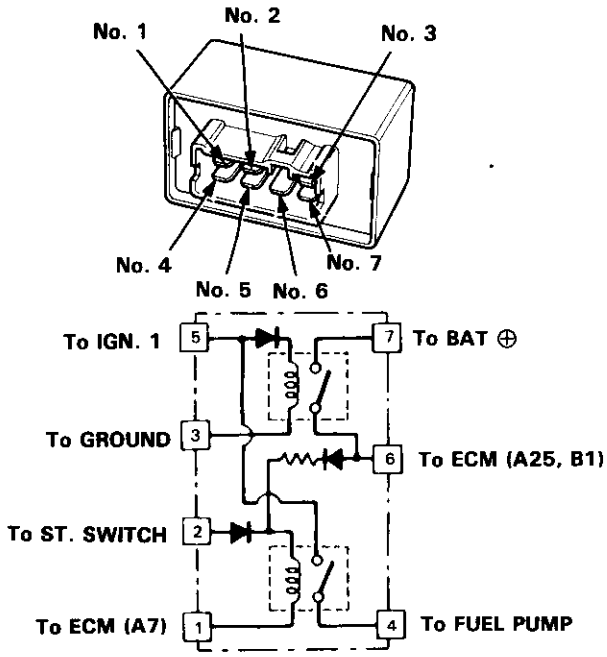

3. Attach the battery positive terminal to the No. 5 terminal and the battery negative terminal to the No. 3 terminal of the PGM-FI main relay. Then check that there is continuity between the No. 7 terminal and No.6 terminal of the PGM-FI main relay.

   - If there is continuity, go on to step 4.
   - If there is no continuity, replace the PGM-FI main relay and retest.

4. Attach the battery positive terminal to the No. 6 terminal and the battery negative terminal to the No. 1 terminal of the PGM-FI main relay. Then check that there is continuity between the No. 5 terminal and No. 4 terminal of the PGM-FI main relay.

   - If there is continuity, the PGM-FI main relay is OK.
   - If there is no continuity, replace the PGM-FI main relay and retest.

(cont'd)

PGM-FI Main Relay (cont'd)

Troubleshooting

- **Engine will not start.**
- **Inspection of PGM-FI main relay and relay harness.**

Disconnect the PGM-FI main relay connector.

Check for continuity between BLK terminal ③ and body ground.

Is there continuity?

- NO → **Repair open in BLK wire between PGM-FI main relay and G101 (located at thermostat housing).**
- YES ↓

Measure the voltage between YEL/WHT terminal ⑦ and body ground.

Is there battery voltage?

- NO → **Replace the ECU (ECM) (15 A) fuse in the under-hood fuse/relay box.**
  Repair open or short in the YEL/WHT wire between the PGM-FI main relay and the ECU (ECM) (15 A) fuse.
- YES ↓

Turn the ignition switch ON.

Measure the voltage between BLK/YEL terminal ⑤ and body ground.

Is there battery voltage?

- NO → **Replace the No. 24 ACG (ALT) (IG) (15 A: B18B1 engine, 20 A: B18C1 engine) fuse in the under-dash fuse/relay box.**
  Repair open or short in the BLK/YEL wire between the PGM-FI main relay and the No. 24 ACG (ALT) (IG) (15 A: B18B1 engine, 20 A: B18C1 engine) fuse.
- YES ↓

Turn the ignition switch to the START position.

Measure the voltage between BLU/WHT terminal ② and body ground.

NOTE:
- M/T: Clutch pedal must be depressed.
- A/T: Transmission in [N] or [P] position.

Is there battery voltage?

- NO → **Replace the No. 18 STARTER SIGNAL (7.5 A) fuse in the under-dash fuse/relay box.**
  Repair open or short in the BLU/WHT wire between the PGM-FI main relay and the No. 18 STARTER SIGNAL (7.5 A) fuse.
- YES ↓

(To page 11-113)

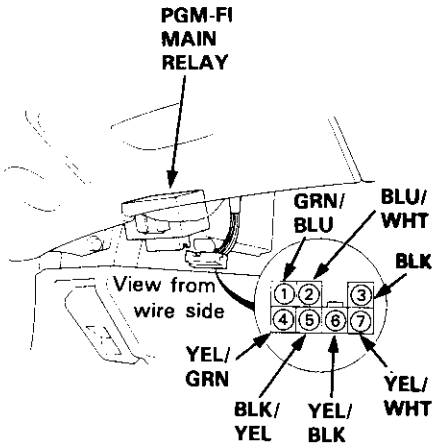

(From page 11-112)

Turn the ignition switch off.

Connect the test harness between the ECM and connectors. Disconnect "A" connector from the ECM only, not the main wire harness (see page 11-37).

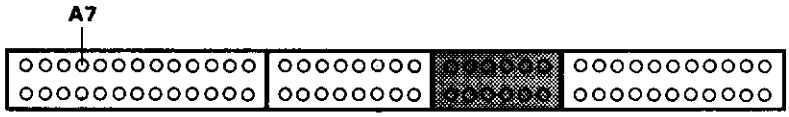

Check for continuity between GRN/BLU terminal ① and A7 terminal.

Is there continuity?

NO → **Repair open in GRN/BLU wire between ECM (A7) and PGM-FI main relay.**

YES

Reconnect "A" connector to the ECM.

Connect the PGM-FI main relay connector.

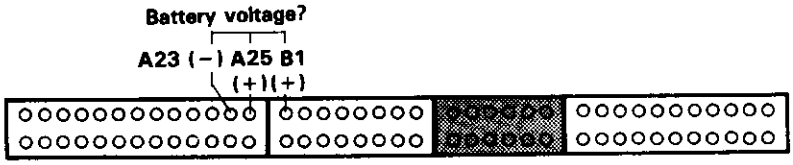

Turn the ignition switch ON.

Measure the voltage between A23 (−) terminal and the following terminals; A25 (+) B1 (+).

Is there battery voltage?

NO →
- **Repair open in the YEL/BLK wire ⑥ between the ECM (A25, B1) and PGM-FI main relay.**
- **Replace the PGM-FI main relay.**

YES

Turn the ignition switch OFF.

Measure the voltage between A7 (+) terminal and A23 (−) terminal when the ignition switch is first turned ON for two seconds.

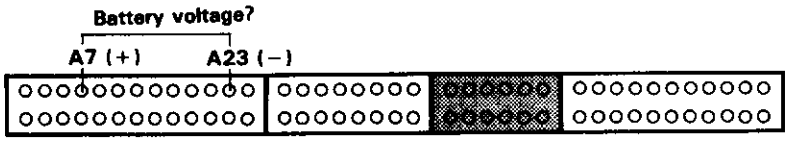

Is there 1.0 V or less?

NO → **Substitute a known-good ECM and recheck. If pescribed voltage is now available, replace the original ECM.**

YES

Check the PGM-FI main relay (see page 11-111).

Fuel Tank

Replacement

⚠ WARNING Do not smoke while working on fuel system. Keep open flame away from your work area.

1. Relieve the fuel pressure (see page 11-100).
2. Jack up the car and support with jackstands.
3. Remove the drain bolt and drain the fuel into an approved container.
4. Remove the rear seat, access panels and disconnect the 2P and 3P connectors.
5. Remove the EVAP two way valve cover and fuel hose protector.
6. Disconnect the hoses.
   CAUTION:
   - **When disconnecting the hoses, slide back the clamps, then twist hoses as you pull, to avoid damaging them.**
   - **Clean the flared joint of high pressure hoses thoroughly before reconnecting them.**
7. Place a jack, or other support, under the tank.
8. Remove the strap nuts and let the straps fall free.
9. Remove the fuel tank.
   NOTE: The tank may stick on the undercoat applied to its mount. To remove, carefully pry it off the mount.
10. Install a new washer on the drain bolt, then install parts in the reverse order of removal.

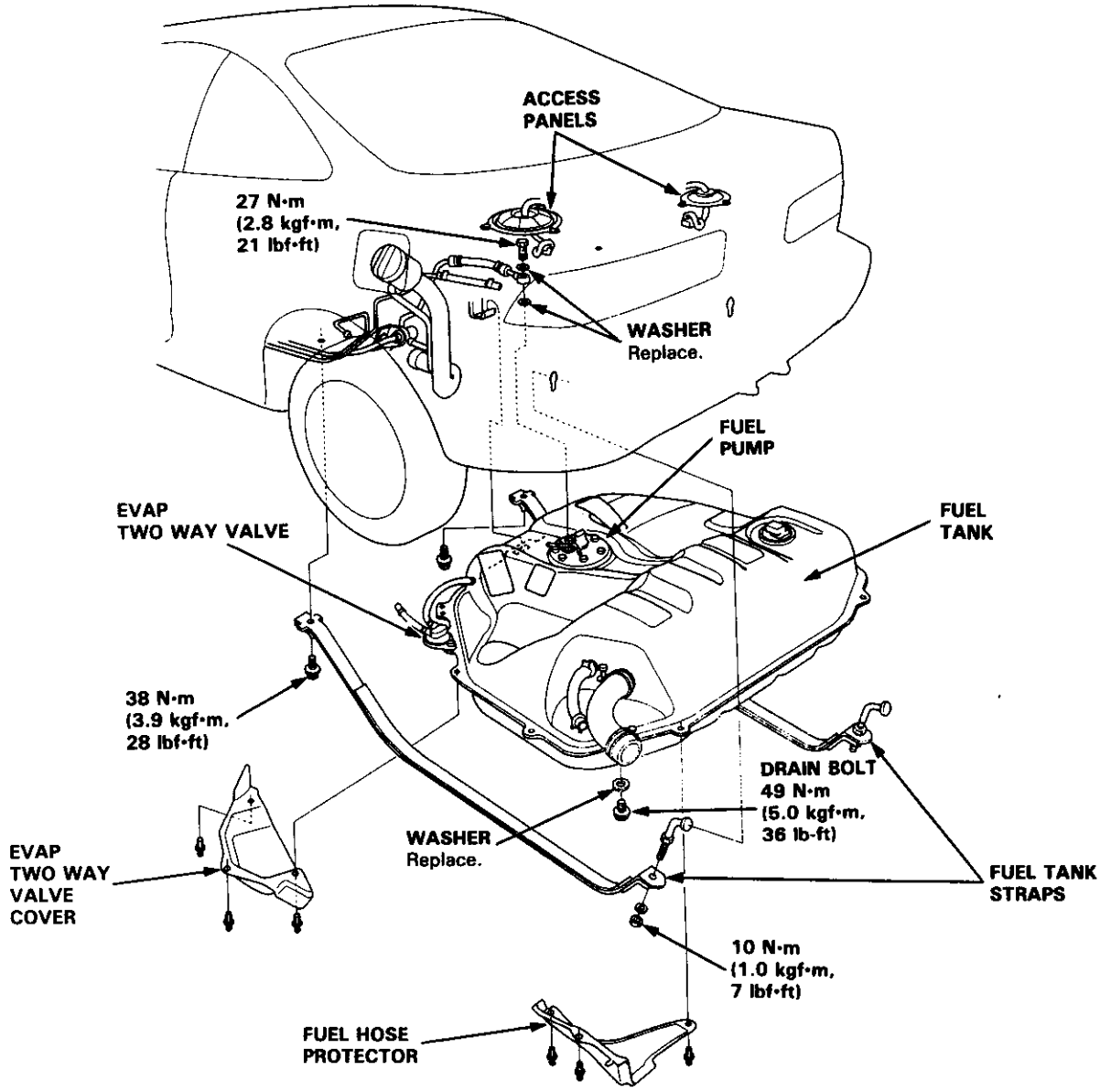

System Troubleshooting Guide

NOTE: Across each row in the chart, the sub-systems that could be sources of a symtom are ranked in the order they should be inspected starting with ①. Find the symptom in the left column, read across to the most likely source, then refer to the page listed at the top of that column. If inspection shows the system is OK, try the next system ②, etc.

[B18B1 engine]

PAGE / SUB-SYSTEM	THROTTLE CABLE	THROTTLE BODY	AIR CLEANER AND INTAKE AIR DUCT
SYMPTOM	11-118	11-120	11-117
WHEN COLD FAST IDLE OUT OF SPEC		①	
WHEN WARM IDLE SPEED TOO HIGH	②	①	
LOSS OF POWER		①	②

[B18C1 engine]

PAGE / SUB-SYSTEM	THROTTLE CABLE	THROTTLE BODY	INTAKE AIR BYPASS (IAB) CONTROL	AIR CLEANER AND INTAKE AIR DUCT
SYMPTOM	11-119	11-120	11-124	11-117
WHEN COLD FAST IDLE OUT OF SPEC		①		
WHEN WARM IDLE SPEED TOO HIGH	②	①		
LOSS OF POWER		①	②	③

Intake Air System

System Description

The system supplies air for all engine needs. It consists of the intake air pipe, Air Cleaner (ACL), intake air duct, Throttle Body (TB), Idle Air Control (IAC) Valve, fast idle thermo valve, and intake manifold.
A resonator in the intake air pipe provides additional silencing as air is drawn into the system.

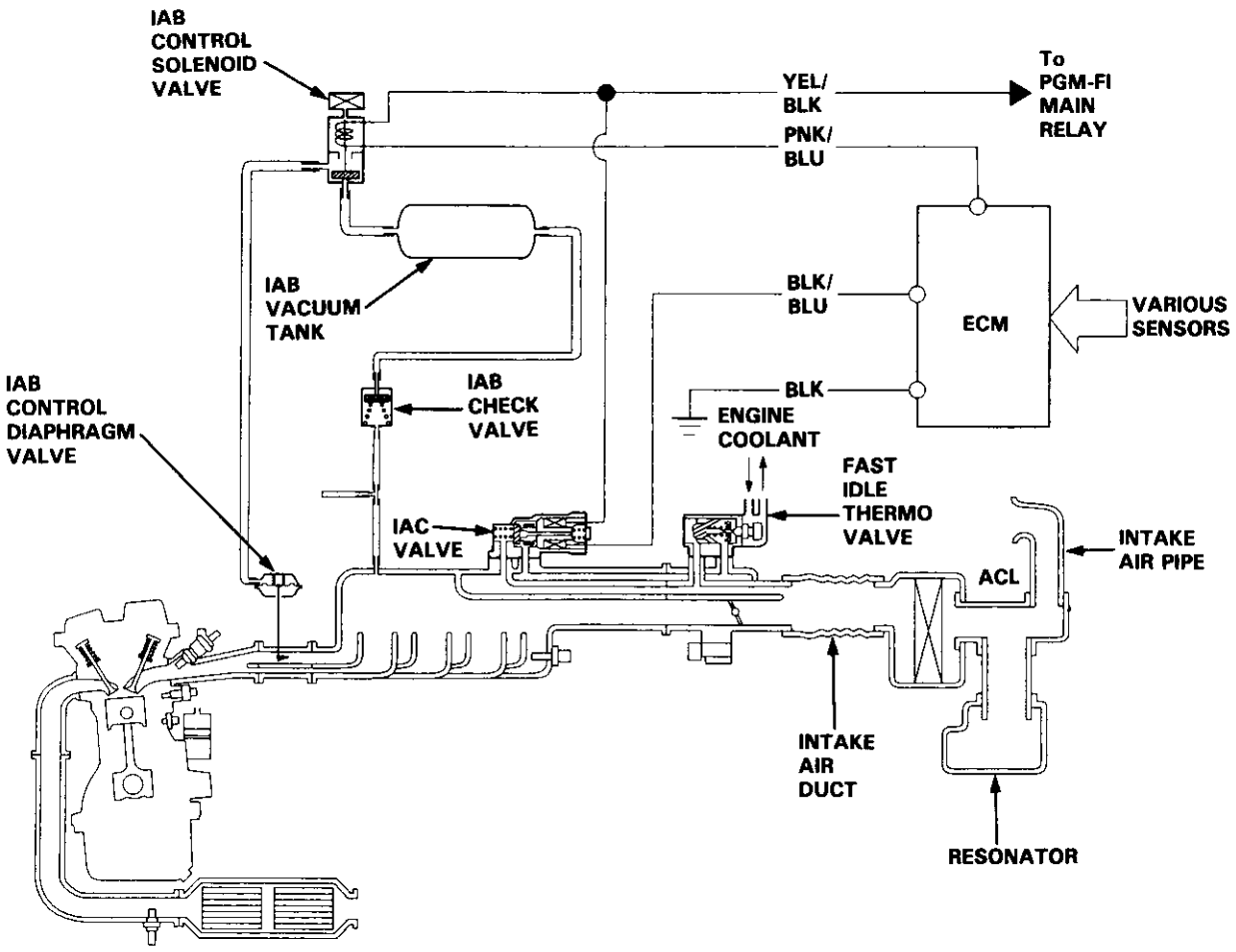

Air Cleaner (ACL)

ACL Element Replacement

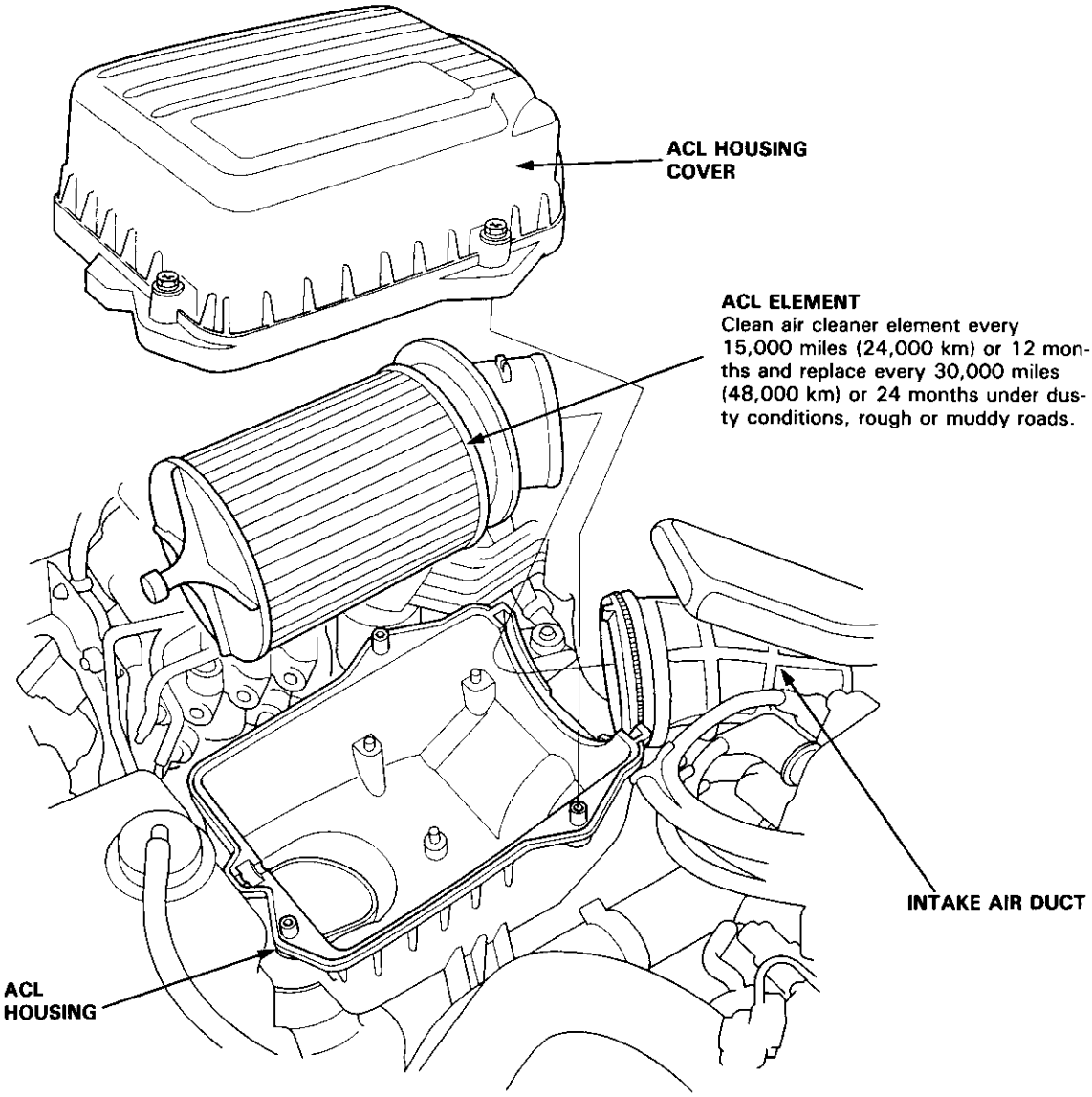

Throttle Cable [B18B1 engine]

Inspection/Adjustment

1. Start the engine. Hold the engine at 3,000 rpm with no load (A/T in [N] or [P] position, M/T in neutral) until the radiator fan comes on, then let it idle.

2. Check that the throttle cable operates smoothly with no binding or sticking. Repair as necessary.

3. Check cable free play at the throttle linkage. Cable deflection should be 10–12 mm (0.39–0.47 in.)

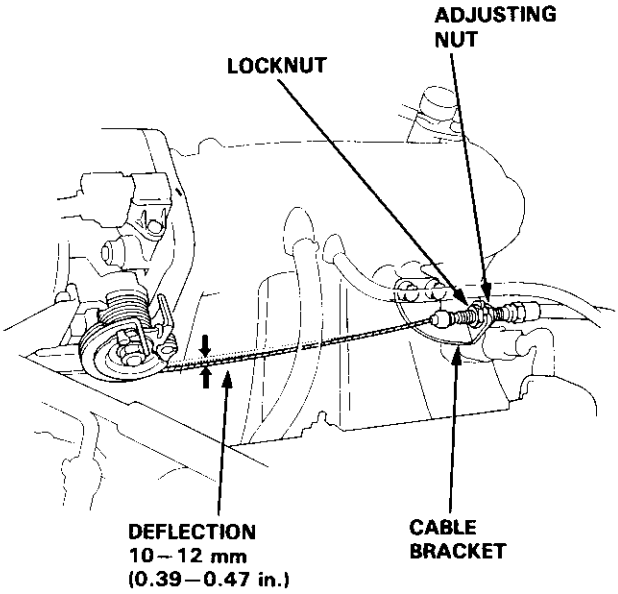

4. If deflection is not within specs, loosen the locknut and turn the adjusting nut until the deflection is as specified.

5. With the cable properly adjusted, check the throttle valve to be sure it opens fully when you push the accelerator pedal to the floor. Also check the throttle valve to be sure it returns to the idle position whenever you release the accelerator pedal.

Installation

1. Fully open the throttle valve, then install the throttle cable in the throttle linkage and install the cable housing in the cable bracket.

2. Start the engine. Hold the engine at 3,000 rpm with no load (A/T in [N] or [P] position, M/T in neutral) until the radiator fan comes on, then let it idle.

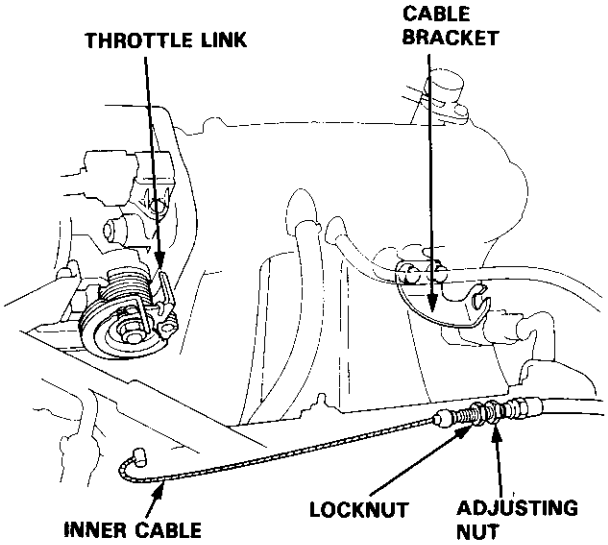

3. Hold the cable sheath, removing all slack from the cable.

4. Turn the adjusting nut until it is 3 mm (0.12 in.) away from the cable bracket.

5. Tighten the locknut. The cable deflection should now be 10–12 mm (0.39–0.47 in.). If not, see Inspection/Adjustment.

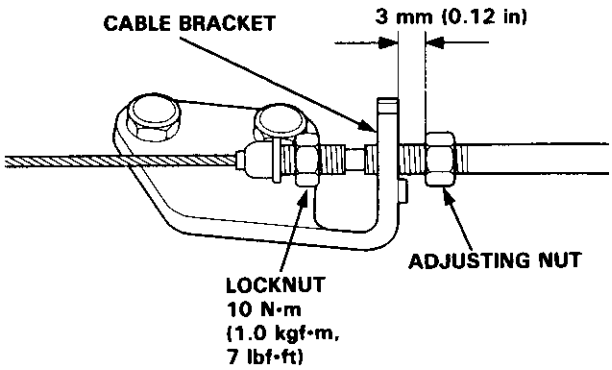

Throttle Cable [B18C1 engine]

Inspection/Adjustment

1. Start the engine. Hold the engine at 3,000 rpm with no load in neutral until the radiator fan comes on, then let it idle.

2. Check that the throttle cable operates smoothly with no binding or sticking. Repair as necessary.

3. Check cable free play at the throttle linkage, Cable deflection should be 10–12 mm (0.39–0.47 in.)

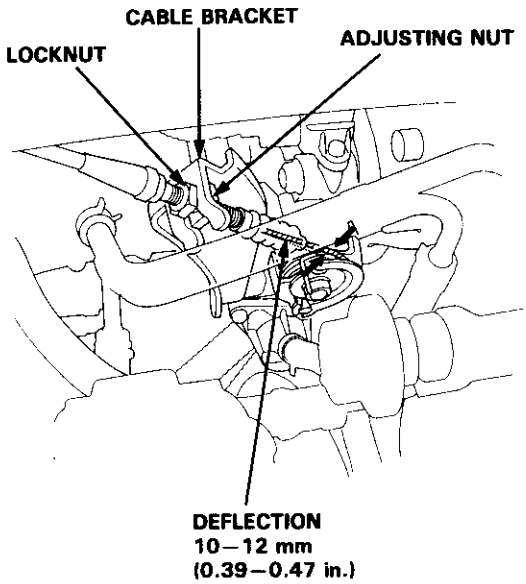

4. If deflection is not within specs, loosen the locknut and turn the adjusting nut until the deflection is as specified.

5. With the cable properly adjusted, check the throttle valve to be sure it opens fully when you push the accelerator pedal to the floor. Also check the throttle valve to be sure it returns to the idle position whenever you release the accelerator pedal.

Installation

1. Fully open the throttle valve, then install the throttle cable in the throttle linkage and install the cable housing in the cable bracket.

2. Start the engine. Hold the engine at 3,000 rpm with no load in neutral until the radiator fan comes on, then let it idle.

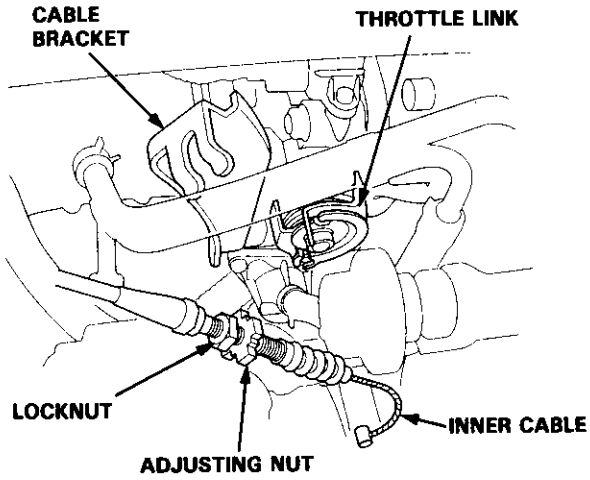

3. With part A of the cable bracket, support the cable sheath so that there is no inner wire free play. Turn the adjusting nut until it touches part A, leaving a gap between the locknut and adjusting nut.

4. Move the cable sheath to part B of the cable bracket that so the bracket slides into the gap between the locknut and adjusting nut. Tighten the locknut.

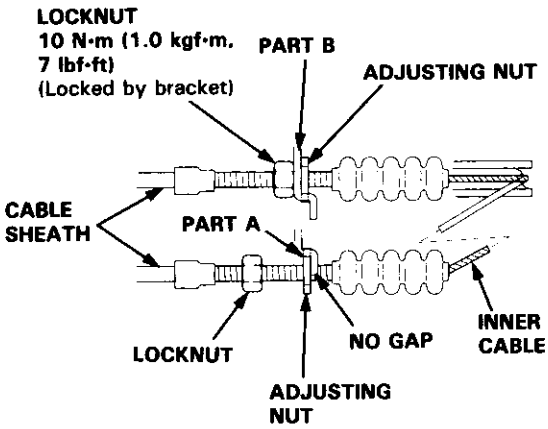

5. The cable deflection should now be 10–12 mm (0.39–0.47 in.). If not, see Inspection/Adjustment.

Throttle Body

Description

The throttle body is of the single-barrel side-draft type. The lower portion of the throttle valve is heated by engine coolant from the cylinder head. The idle adjusting screw which increases/decreases bypass air and the Evaporative Emission (EVAP) Control Canister port are located on the top of the throttle body.

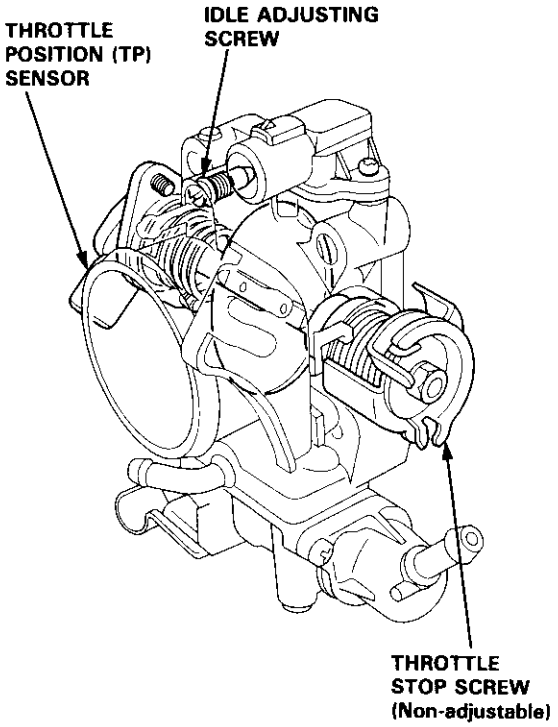

Inspection

CAUTION: Do not adjust the throttle stop screw. It is preset at the factory.

1. Start the engine. Hold the engine at 3,000 rpm with no load (A/T in [N] or [P] position, M/T in neutral) until the radiator fan comes on, then let it idle.

2. Disconnect the vacuum hose (to the EVAP control canister) from the top of the throttle body; connect a vacuum, gauge to the throttle body.

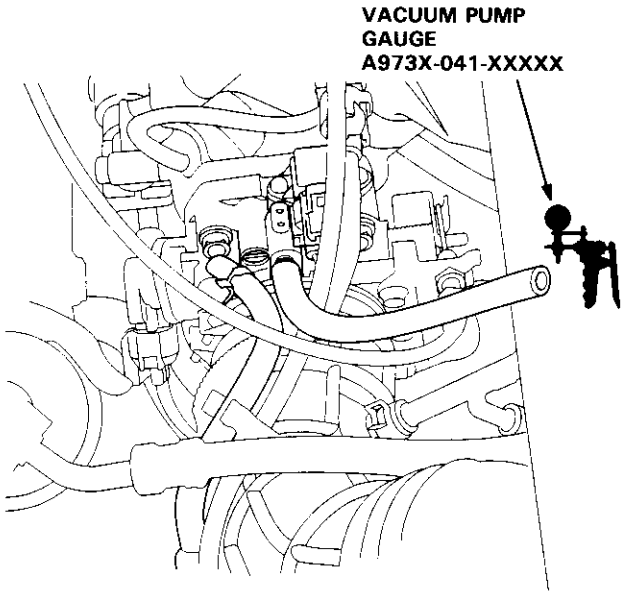

3. Allow the engine to idle and check that the gauge indicates no vacuum.

   - If there is vacuum, check the throttle cable (see page 11-118, 119).

4. Check that vacuum is indicated on the gauge when the throttle is opened slightly from idle.

   - If the gauge indicates no vacuum, check the throttle body port. If the throttle body port is clogged, clean it with carburetor cleaner.

5. Stop the engine and check that the throttle cable operates smoothly without binding or sticking.

   - If there are any abnormalities in the above steps, check for:

   – Excessive wear or play in the throttle valve shaft.
   – Sticky or binding throttle lever at full close position.
   – Clearance between throttle stop screw and throttle lever at full close position.

B18B1 engine:

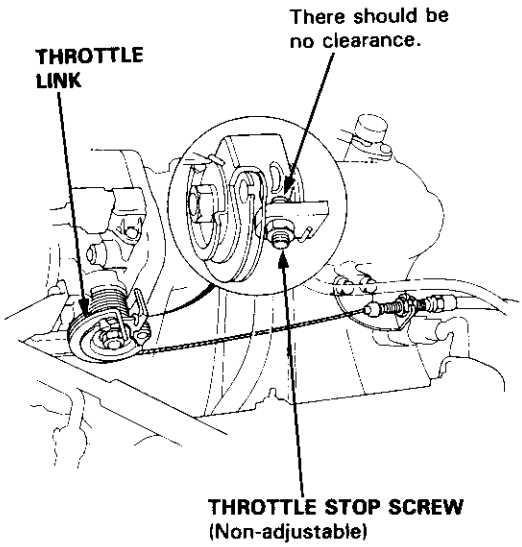

B18C1 engine:

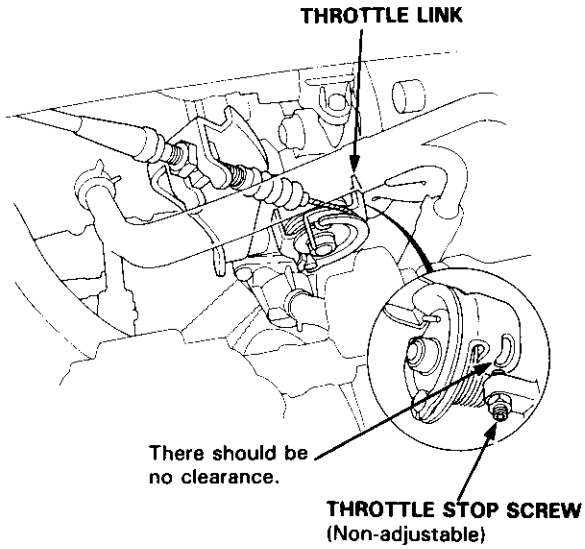

Replace the throttle body if there is excessive play in the throttle valve shaft or if the shaft is binding or sticking.

(cont'd)

Throttle Body (cont'd)

Disassembly

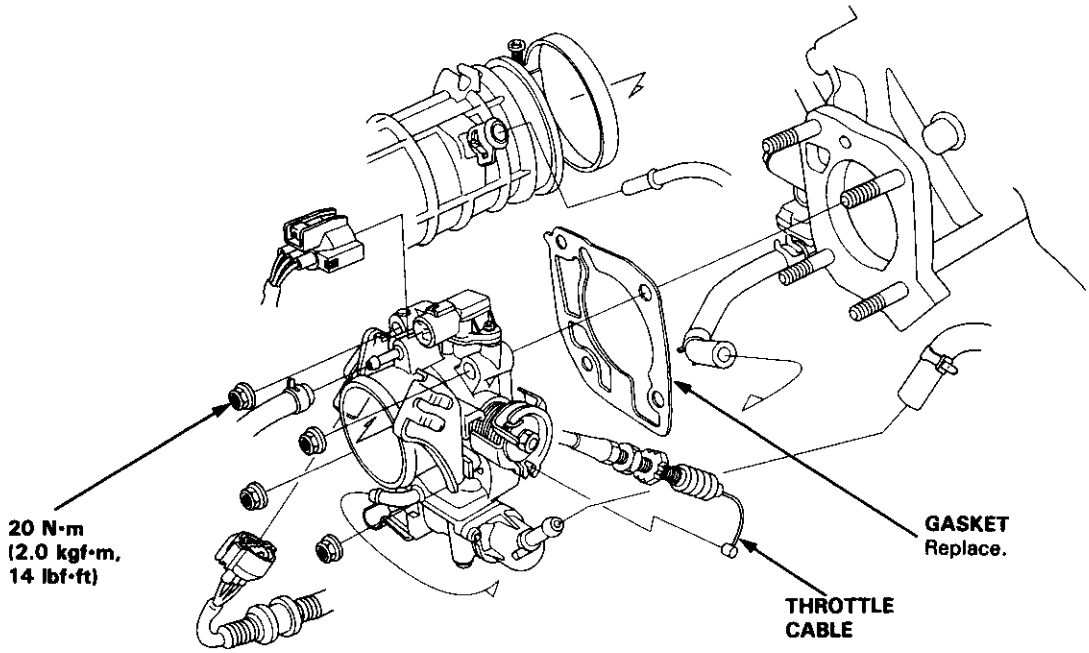

CAUTION:

- **The throttle stop screw is non-adjustable.**
- **After reassembly, adjust the throttle cable (page 11-118, 119), and A/T throttle control cable (section 14) for cars with A/T.**
- **The TP sensor is not removable.**

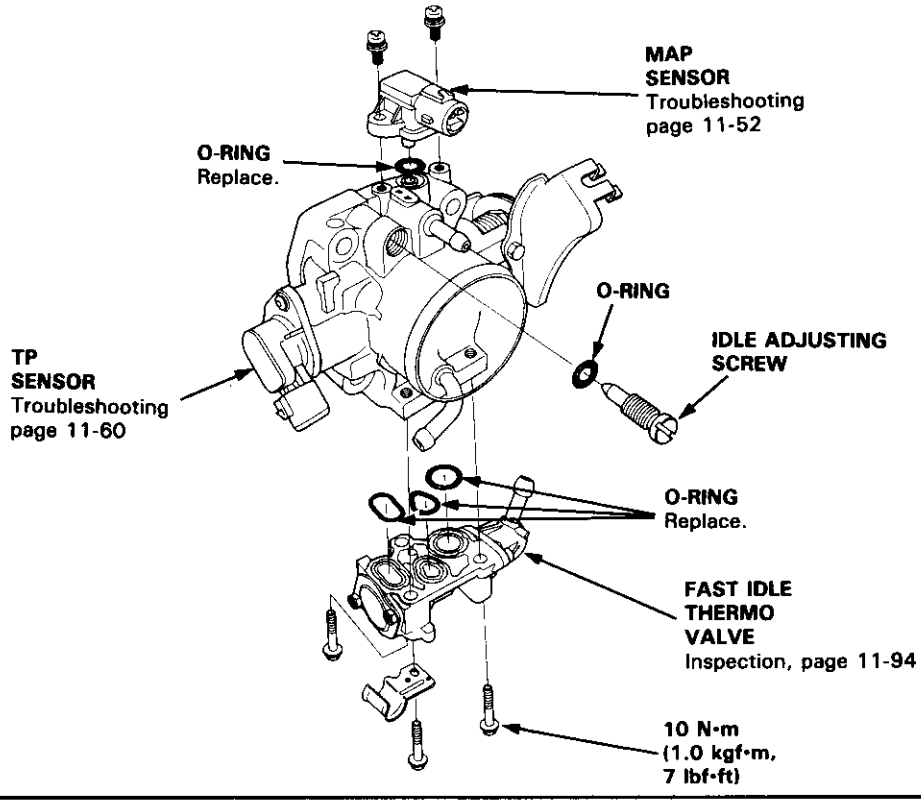

Intake Air Bypass (IAB) Control System [B18C1 engine]

Description

Two air intake paths are provided in the intake manifold to allow the selection of the intake path most favorable for a given engine speed.

Satisfactory power performance is achieved by closing and opening the intake air bypass (IAB) control valves. High torque at low RPM is acheived when the valves are closed, whereas high power at high RPM is achieved by when the valves are opened.

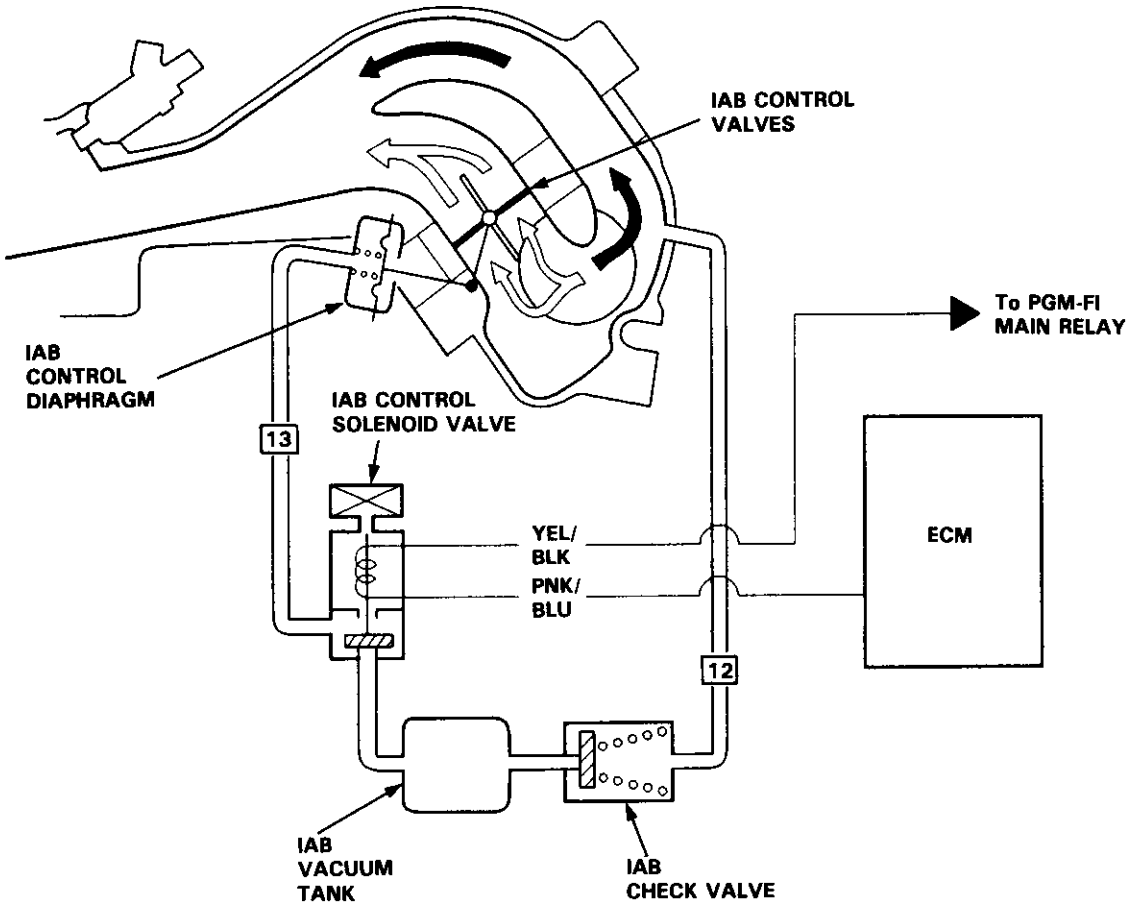

INTAKE AIR BYPASS (IAB) CONTROL SOLENOID VALVE OFF

ENGINE RPM IS ABOVE 5,750 rpm

(cont'd)

Intake Air Bypass (IAB) Control System [B18C1 engine] (cont'd)

Troubleshooting

Inspection of IAB Control System

Start engine and allow to idle.

Remove #13 vacuum hose from the IAB control diaphragm and connect vacuum gauge to the hose.

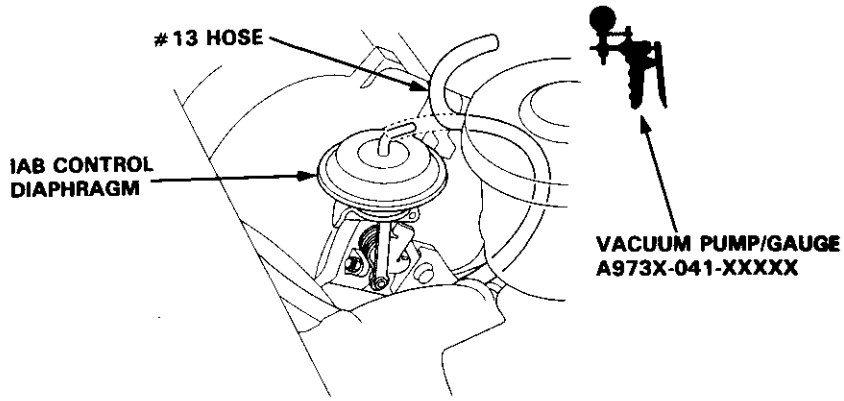

Is there vacuum?

- NO → Remove #12 vacuum hose from the IAB vacuum tank, then check for vaccum at the IAB vacuum tank.
  - Is there vacuum?
    - NO → **Repair the blockage or vacuum leak between the IAB vacuum tank and the intake manifold.**
    - YES → Disconnect the 2P connector from the IAB control solenoid valve.
  - Measure voltage between YEL/BLK (+) terminal and PNK/BLU (−) terminal.
  - Is there battery voltage?
    - YES → **Replace the IAB control solenoid valve.**
    - NO → Measure voltage between BLK/YEL (+) terminal and body ground.
- YES → A

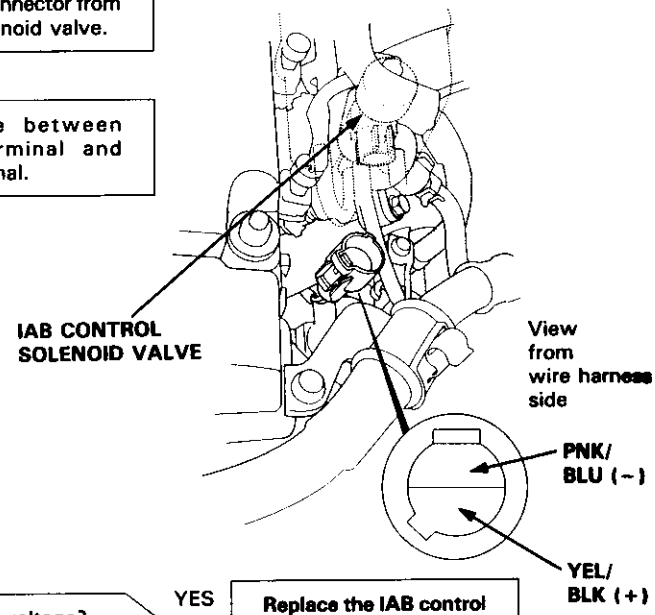

A (To page 11-125)

B (To page 11-125)

(From page 11-124)

A

Raise engine speed to above 6,000 rpm.

Check for vacuum at #13 vacuum hose.

Is there vacuum?

YES → Disconnect the 2P connector from the IAB control solenoid valve.

NO → **IAB control system is OK.**

(From page 11-124)

B

Is there battery voltage?

NO → **Repair open in YEL/BLK wire between the 2P connector and PGM-FI main relay.**

YES → Turn the ignition switch OFF.

Connect the test harness between the ECM and connectors (see page 11-37).

Turn the ignition switch ON and connect a jumper wire between ECM (A17) terminal and ECM (A26) terminal.

Does the solenoid valve click when the jumper is connected?

NO → **Repair open in PNK/BLU wire between ECM (A17) and the 2P connector.**

YES → **Substitute a known-good ECM and recheck. If symptom/indication goes away, replace the original ECM.**

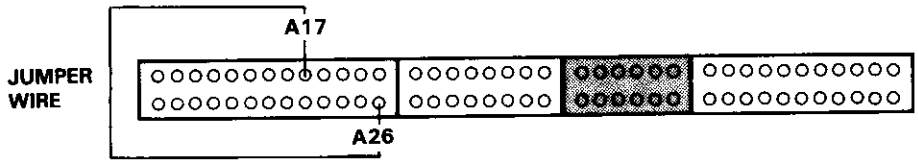

Is there vacuum?

YES → Disconnect the 2P connector from the IAB control solenoid valve.

Is there vacuum?

YES → **Replace the IAB control solenoid valve.**

NO → Turn the ignition switch OFF.

Disconnect "A" connector from ECM.

Check for continuity to ground on the PNK/BLU wire.

Is there continuity to ground?

YES → **Repair short to ground at PNK/BLU wire between ECM (A17) and the 2P connector.**

NO → **Substitute a known-good ECM and recheck. If symptom goes away, replace the original ECM.**

Intake Air Bypass (IAB) Control Valve [B18C1 engine]

Testing

CAUTION: Do not adjust the IAB control valve full-close screw. It is preset at the factory.

1. Check the IAB control valve shaft for binding or sticking.
2. Check the IAB control valve for smooth movement.
3. With the engine at idle, check that Ⓐ of the IAB control valve is in close contact with the stopper when vacuum hose is disconnected.

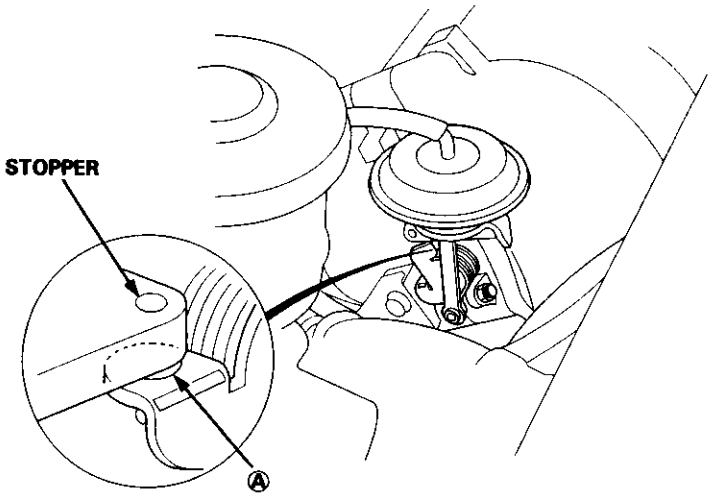

4. With the engine at idle, check that Ⓑ of the IAB control valve is in close contact with the full-close screw when the vacuum hose is connected.

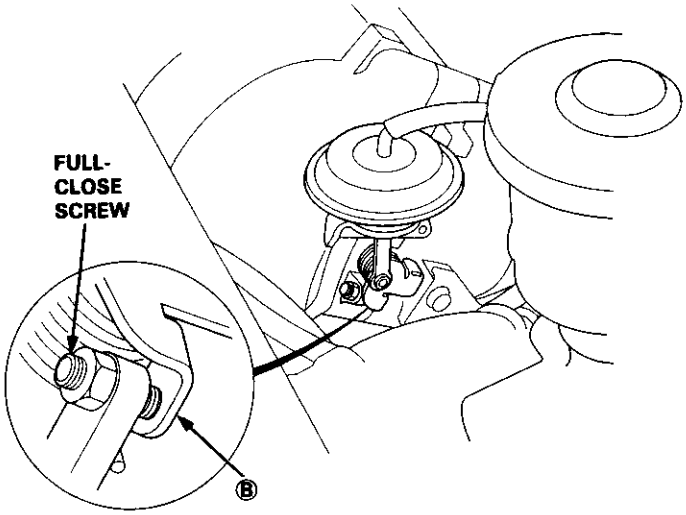

- If any fault is found, clean the linkage and shafts with carburetor cleaner.

— If the problem still exists after cleaning, disassemble the intake manifold and check the IAB valve body assembly.

Disassembly:

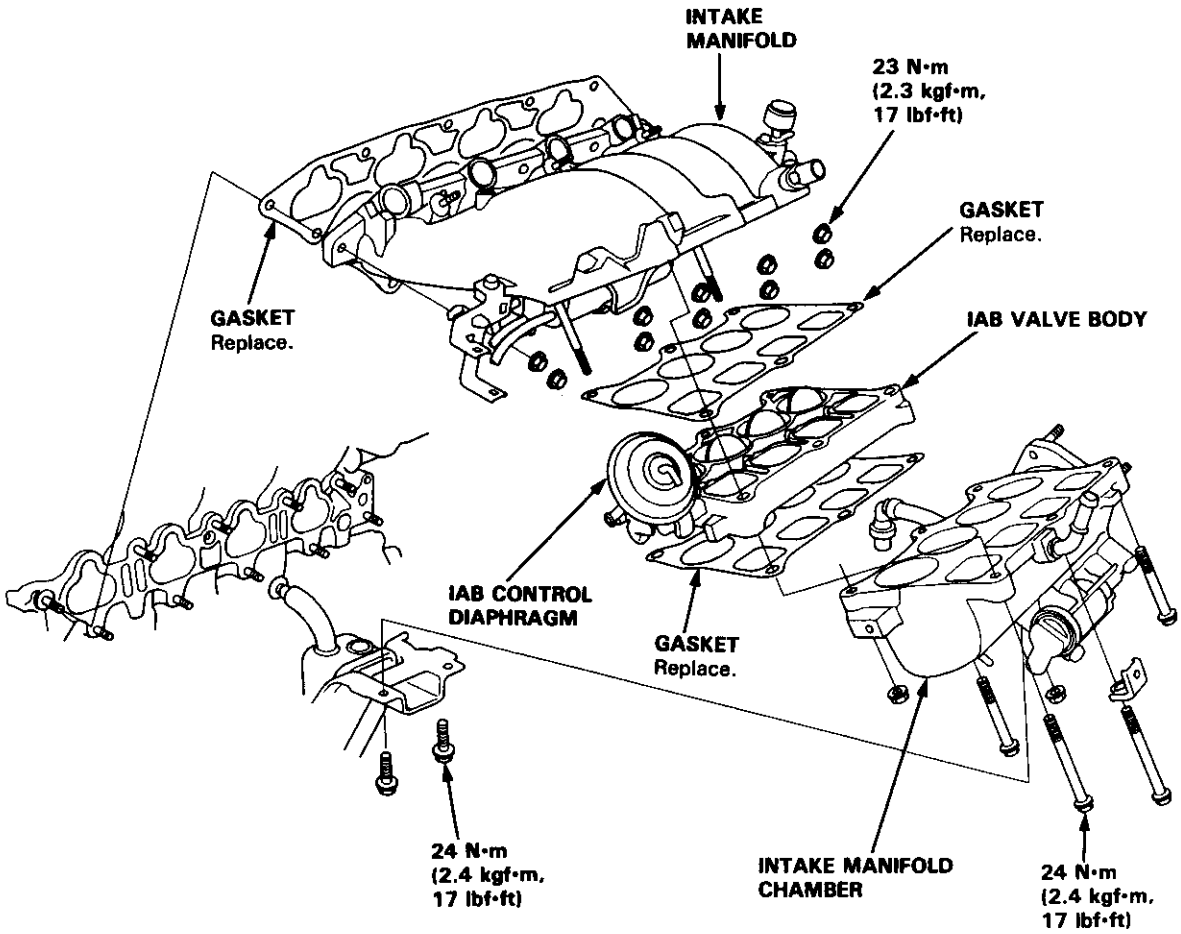

Intake Manifold [B18B1 engine]

Disassembly:

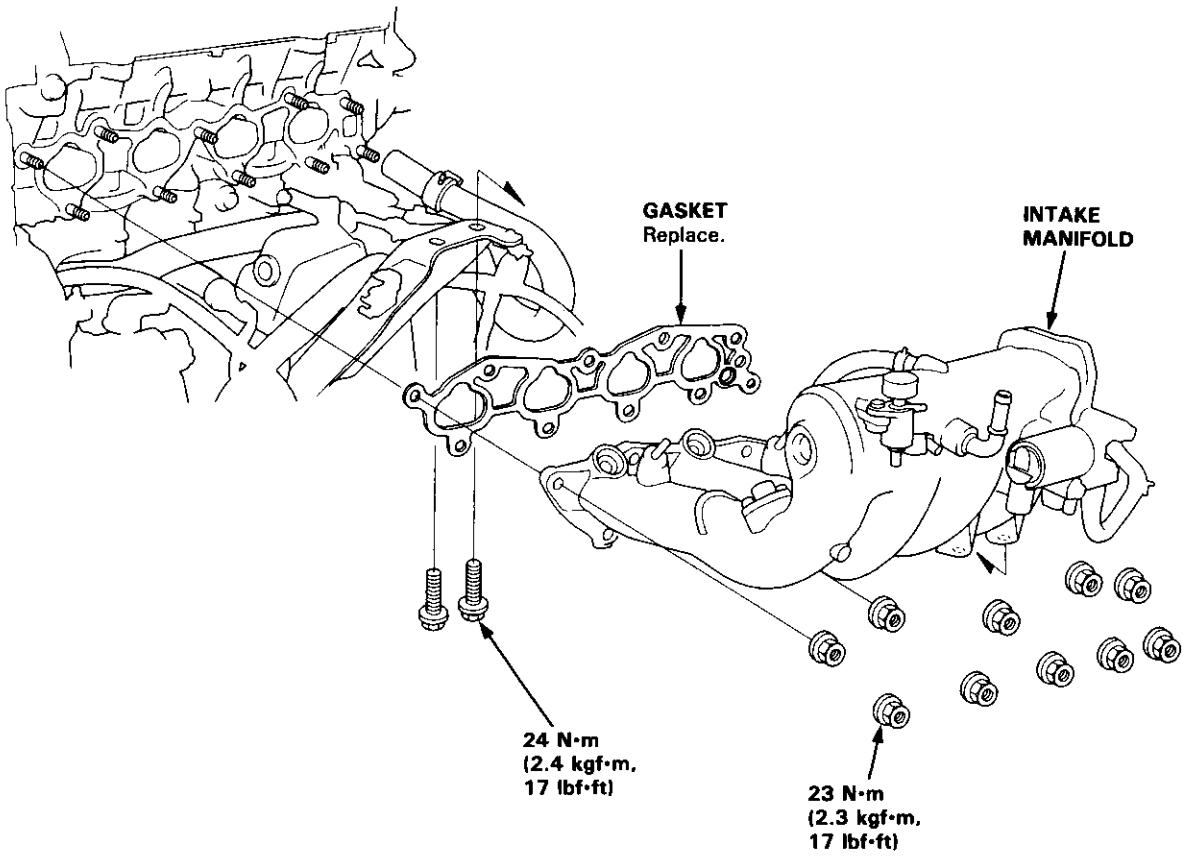

System Troubleshooting Guide

NOTE: Across each row in the chart, the sub-systems that could be sources of a symptom are ranked in the order they should be inspected starting with ①. Find the symptom in the left column, read across to the most likely source, then refer to the page listed at the top of that column. If inspection shows the system is OK, try the next most likely system ②, etc.

PAGE / SUB-SYSTEM		THREE WAY CATALYTIC CONVERTER	POSITIVE CRANKCASE VENTILATION SYSTEM	EVAPORATIVE EMISSION CONTROLS
SYMPTOM		11-132, 133	11-134	11-136
ROUGH IDLE			①	
POOR PERFORMANCE	FAILS EMISSION TEST	①		②
	LOSS OF POWER	①		

Emission Control System

System Description

The emission control system includes a Three Way Catalytic Converter (TWC), Positive Crankcase Ventilation (PCV) system and Evaporative Emission (EVAP) Control system. The emission control system is designed to meet federal and state emission standards.

Tailpipe Emission

Inspection

⚠ WARNING Do not smoke during this procedure. Keep any open flame away from your work area.

1. Start the engine. Hold the engine at 3,000 rpm with no load (A/T in [N] or [P] position, M/T in neutral) until the radiator fan comes on, then let it idle.

2. Connect a tachometer.

3. Check and adjust the idle speed, if necessary (see page 11-95).

4. Warm up and calibrate the CO meter according to the meter manufacturer's instructions.

5. Check idle CO with the headlights, heater blower, rear window defogger, cooling fan, and air conditioner off.

   NOTE: (Canada) Pull the parking brake lever up. Start the engine, then check that the headlights are off.

   CO meter should indicate 0.1 % maximum.

Three Way Catalytic Converter (TWC)

Description

The Three Way Catalytic Converter (TWC) is used to convert hydrocarbons (HC), carbon monoxide (CO), and oxides of nitrogen (NOx) in the exhaust gas, to carbon dioxide (CO_2), dinitrogen (N_2) and water vapor.

The illustration shows the TWC for the B18C1 engine.

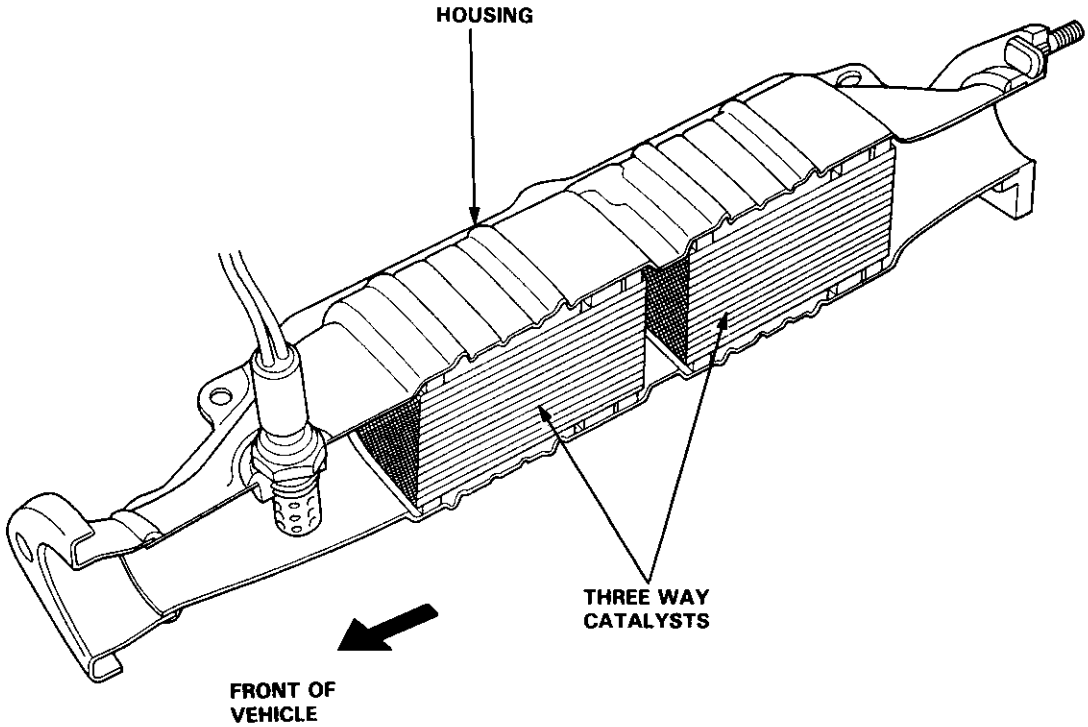

(cont'd)

Three Way Catalytic Converter (TWC) (cont'd)

Inspection

If excessive exhaust system back-pressure is suspected, remove the TWC from the car and make a visual check for plugging, melting or cracking of the catalyst. Replace the TWC if any of the visible area is damaged or plugged.

B18B1 engine:

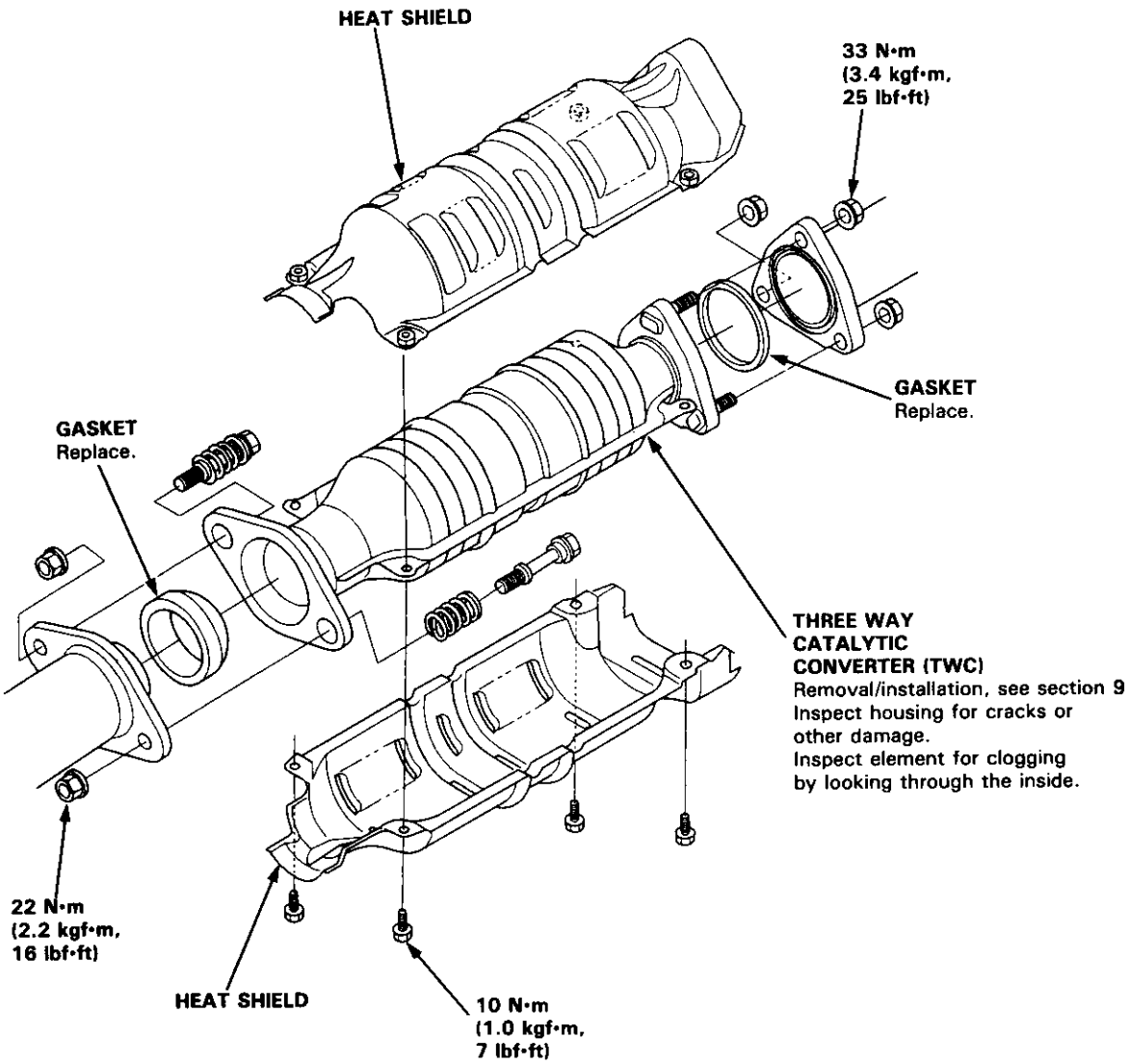

B18C1 engine:

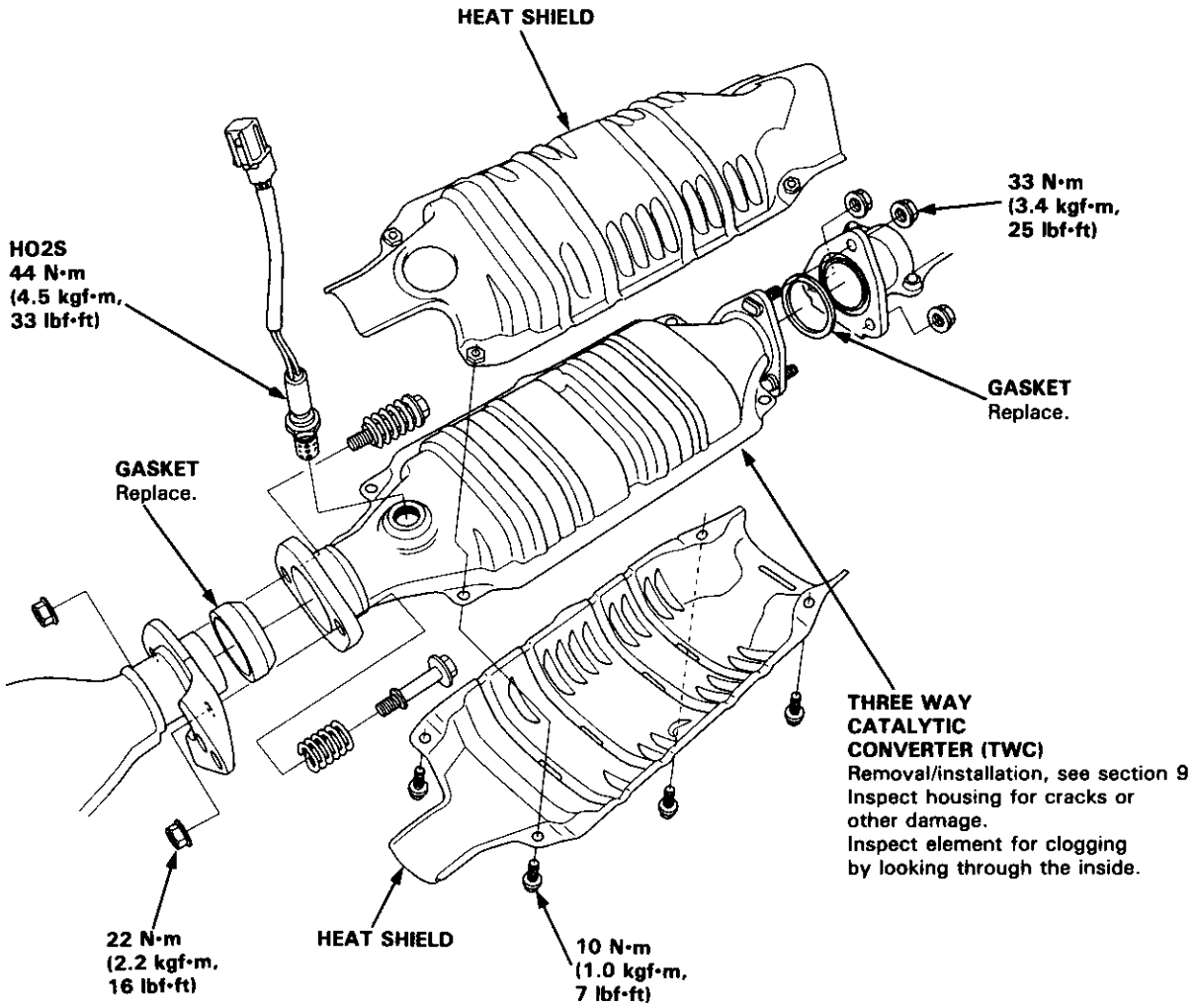

Positive Crankcase Ventilation (PCV) System

Description

The Positive Crankcase Ventilation (PCV) system is designed to prevent blow-by gas from escaping to the atmosphere. The PCV valve contains a spring-loaded plunger. When the engine starts, the plunger in the PCV valve is lifted in proportion to intake manifold vacuum and the blow-by gas is drawn directly into the intake manifold.

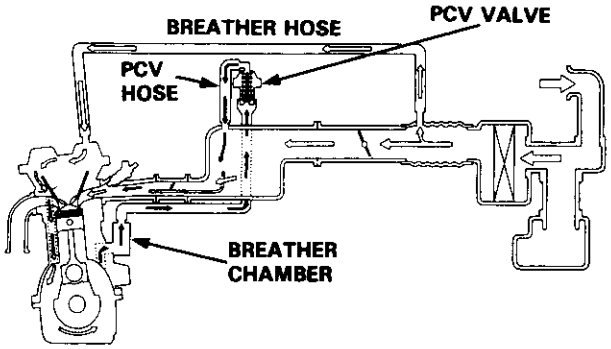

⬅: BLOW-BY VAPOR
⇦: FRESH AIR

Inspection

1. Check the PCV hoses and connections for leaks and clogging.

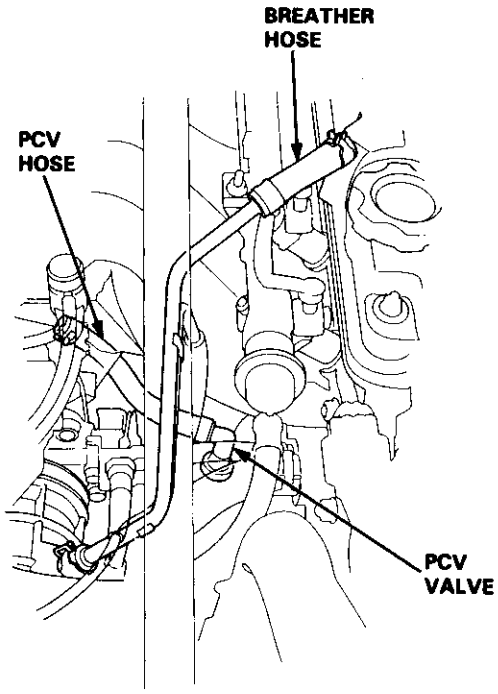

2. At idle, make sure there is a clicking sound from the PCV valve when the hose between PCV valve and intake manifold in lightly pinched with your fingers or pliers.

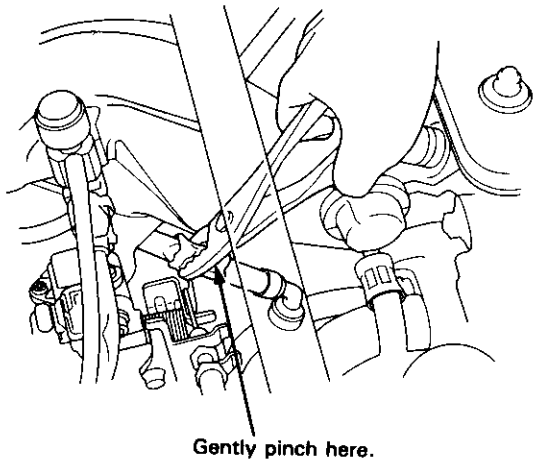

- If there is no clicking sound, check the PCV valve grommet for cracks or damage. If the grommet is OK, replace the PCV valve and recheck.

Evaporative Emission (EVAP) Controls

Description

The evaporative emission controls are designed to minimize the amount of fuel vapor escaping to the atmosphere. The system consists of the following components:

A. **Evaporative Emission (EVAP) Control Canister**
An EVAP control canister is used for the temporary storage of fuel vapor until the fuel vapor can be purged from the EVAP control canister into the engine and burned.

B. **Vapor Purge Control System**
EVAP control canister purging is accomplished by drawing fresh air through the EVAP control canister and into a port on the throttle body. The purging vacuum is controlled by the EVAP purge control diaphragm valve and the EVAP purge control solenoid valve.

EVAP PURGE CONTROL SOLENOID VALVE OFF AFTER STARTING ENGINE

↑

ENGINE COOLANT TEMPERATURE ABOVE 163°F (73°C)

C. **Fuel Tank Vapor Control System**
When fuel vapor pressure in the fuel tank is higher than the set value of the EVAP two way valve, the valve opens and regulates the flow of fuel vapor to the EVAP control canister.

(cont'd)

Evaporative Emission (EVAP) Control (cont'd)

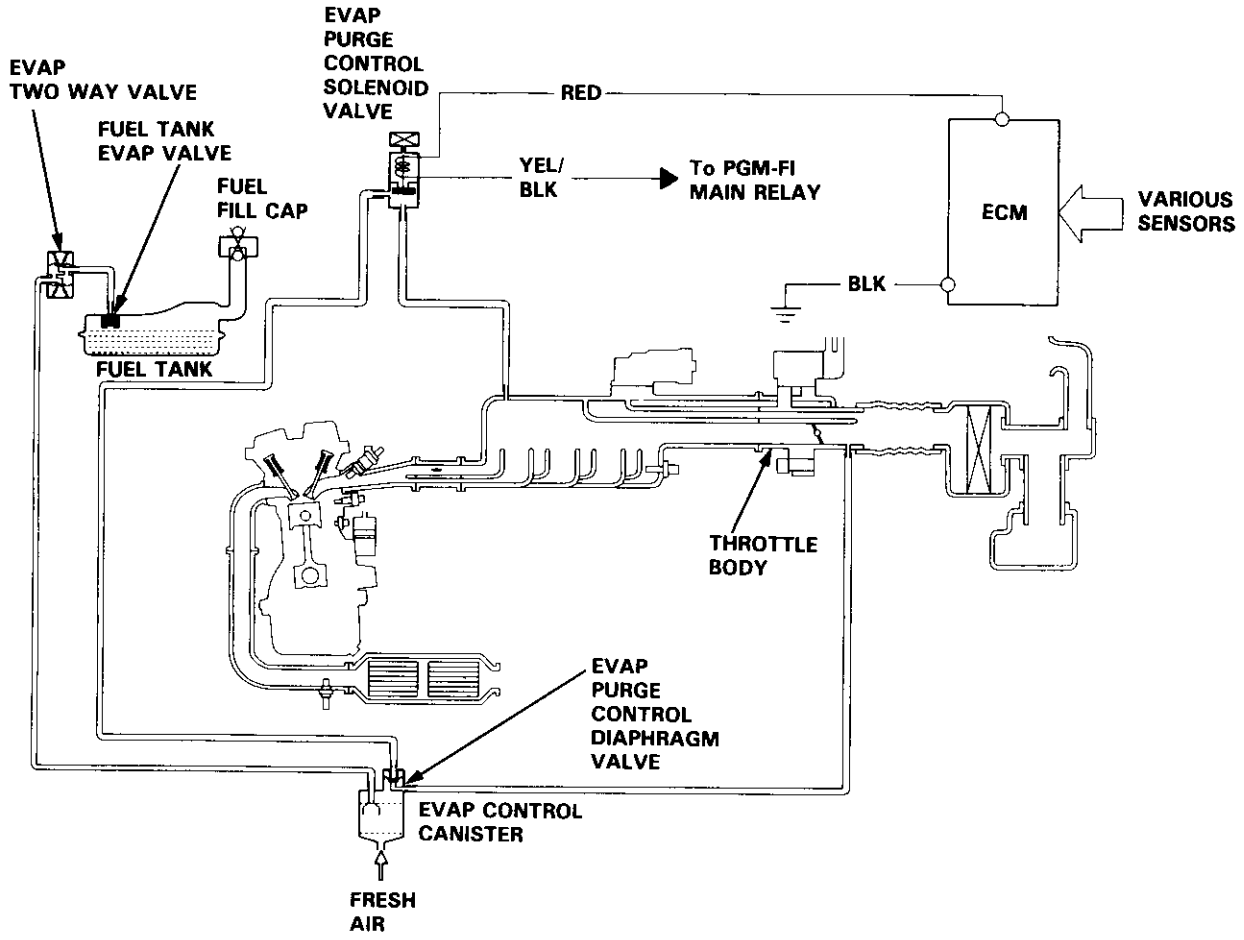

Troubleshooting

Inspection of Evaporative Emission Controls

Disconnect #7 vacuum hose from the EVAP purge control diaphragm valve (on the EVAP control canister) and connect a vacuum gauge to the hose.

Start the engine and allow it to idle.
NOTE: Engine coolant temperature must be below 163°F (73°C)

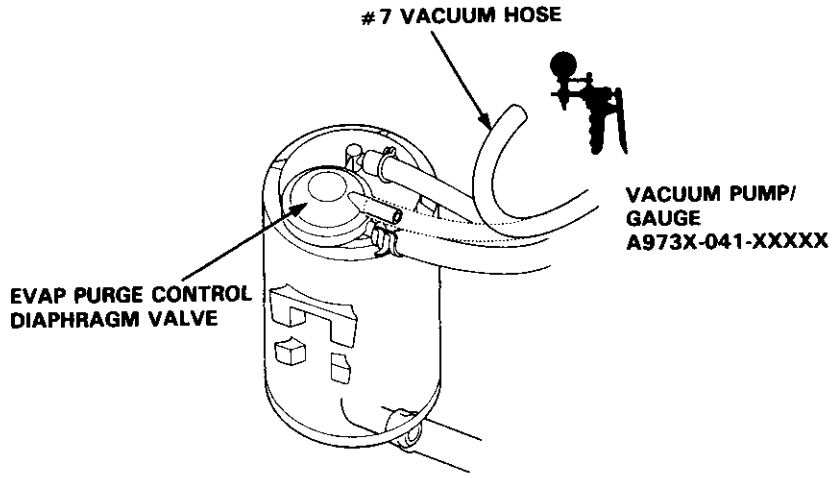

Is there vacuum?

YES → Disconnect the 2P connector from the EVAP purge control solenoid valve.

NO

B18B1 engine:

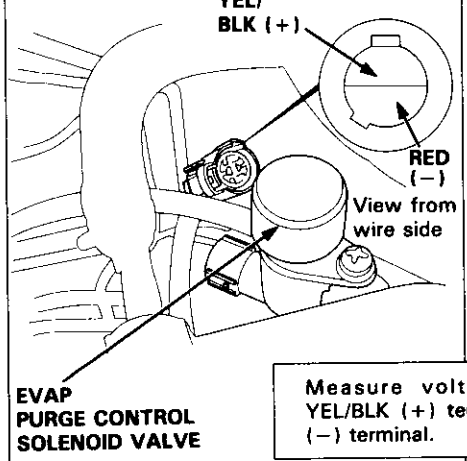

B18C1 engine:

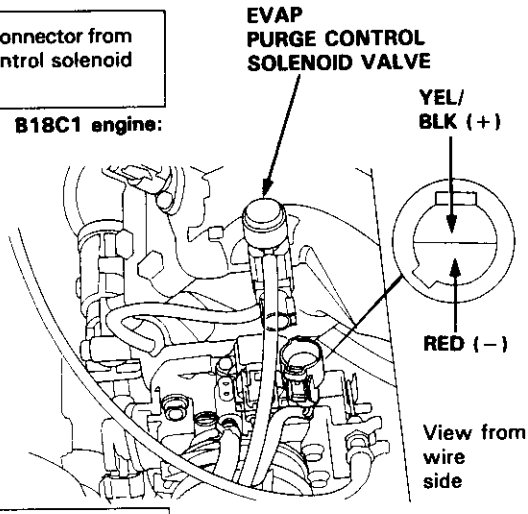

Measure voltage between YEL/BLK (+) terminal and RED (−) terminal.

Is there battery voltage?

YES → **Inspect vacuum hose routing. If OK, replace EVAP purge control solenoid valve.**

NO → Measure voltage between YEL/BLK (+) terminal body ground.

A (To page 11-138)

B (To page 11-138)

(cont'd)

Evaporative Emission (EVAP) Controls (cont'd)

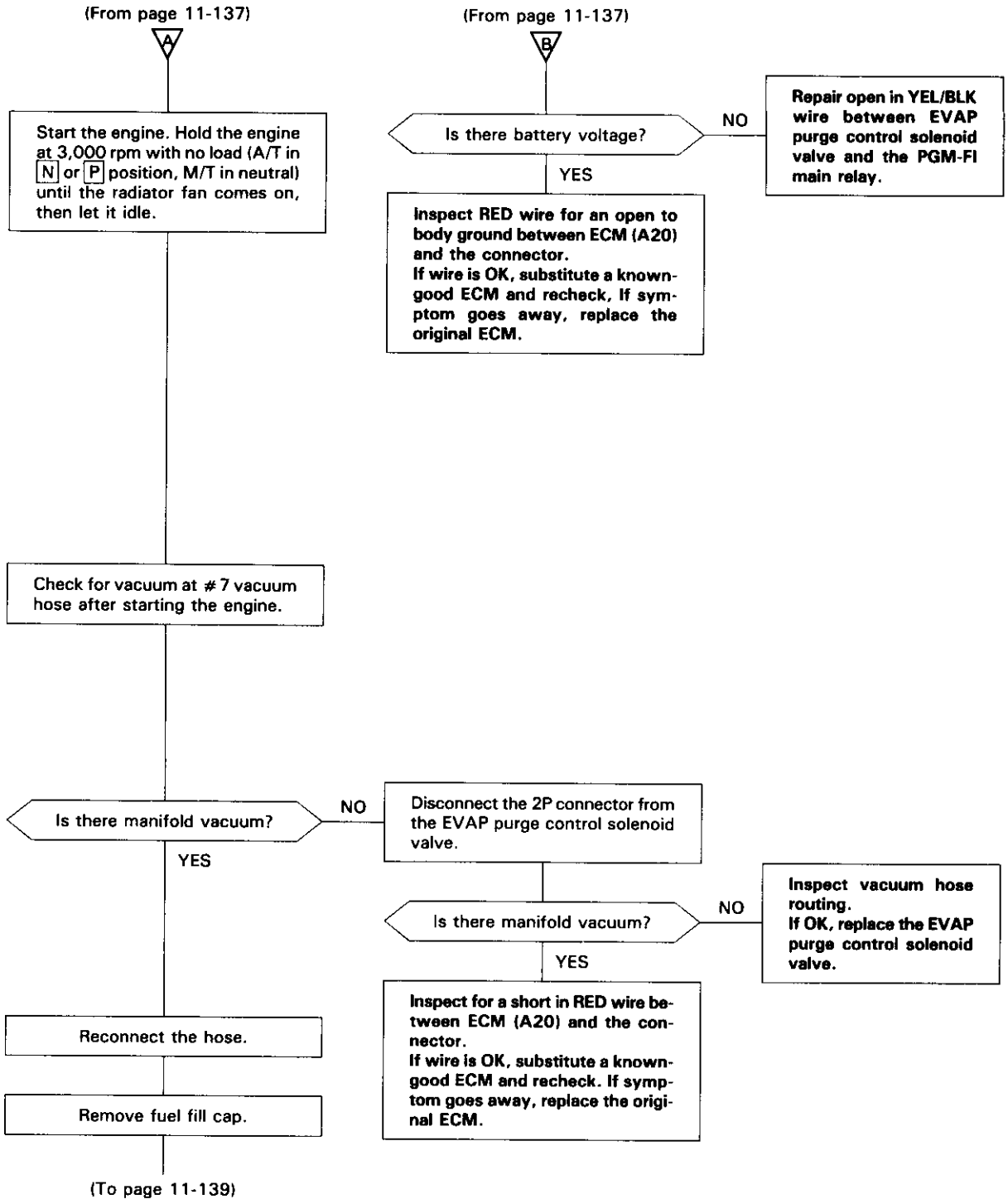

(From page 11-138)

Connect a vacuum gauge to canister purge air hose.

Start the engine and raise speed to 3,500 rpm.

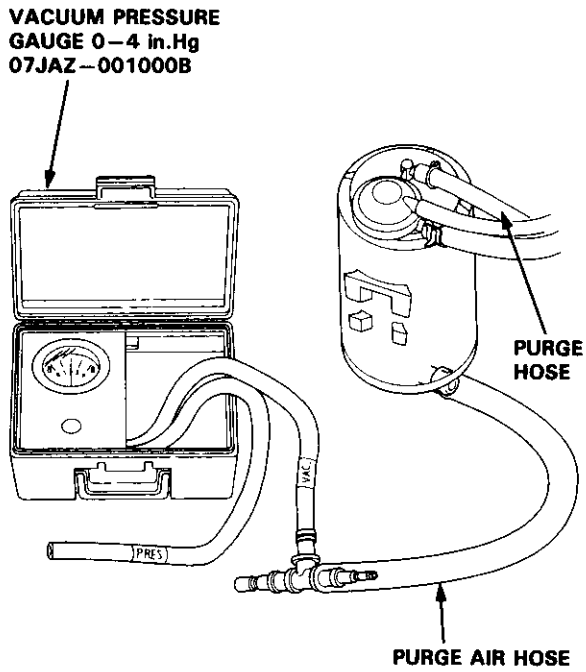

Does vacuum appear on gauge within 1 minute?

NO → Connect a vacuum gauge to the canister purge hose and raise the engine speed to 3,500 rpm.

YES → **See EVAP two way valve test to complete.**
Evaporative emission controls are OK.

Does vacuum appear on the gauge?

NO → **Inspect the purge hose and throttle body port for pinch or blockage.**

YES → **Replace the EVAP control canister.**

(cont'd)

Evaporative Emission Controls (cont'd)

Evaporative Emission (EVAP) Two Way Valve Testing

1. Remove the fuel fill cap.

2. Remove vapor line from the two way valve on the fuel tank and connect to T-fitting from vacuum gauge and vacuum pump as shown.

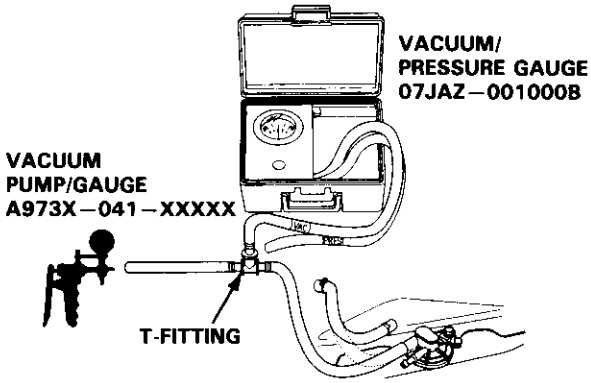

3. Apply vacuum slowly and continuously while watching the gauge.

   Vacuum should stabilize momentarily at 5–15 mmHg (0.2–0.6 in.Hg).
   - If vacuum stabilizes (valve opens) below 5 mmHg (0.2 in.Hg) or above 15 mmHg (0.6 in.Hg), install a new valve and retest.

4. Move vacuum pump hose from vacuum to pressure fitting, and move vacuum gauge hose from vacuum to pressure side as shown.

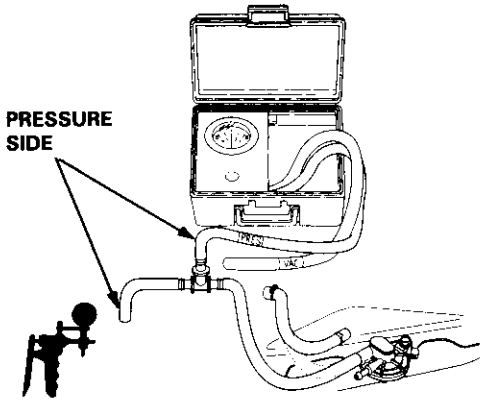

5. Slowly pressurize the vapor line while watching the gauge.

   Pressure should stabilize at 10–35 mmHg (0.4–1.4 in.Hg).
   - If pressure momentarily stabilizes (valve opens) at 10–35 mmHg (0.4–1.4 in.Hg), the valve is OK.
   - If pressure stabilizes below 10 mmHg (0.4 in.Hg) or above 35 mmHg (1.4 in.Hg), install a new valve and retest.

Transaxle

Clutch 12-1
Manual Transmission 13-1
Automatic Transmission 14-1
Differential
  Manual Transmission
    B18B1 engine 15-1
    B18C1 engine 15-9
  Automatic Transmission 15-19
Driveshafts 16-1

Clutch

Special Tools 12-2
Illustrated Index 12-3
Clutch Pedal
  Adjustment 12-4
Clutch Master Cylinder
  Removal/Installation 12-5
Slave Cylinder
  Removal/Installation 12-6
Pressure Plate
  Removal/Inspection 12-7
Clutch Disc
  Inspection/Removal 12-8
Flywheel, Flywheel Bearing
  Inspection 12-9
  Replacement 12-9
Clutch Disc, Pressure Plate
  Installation 12-10
Release Bearing
  Removal/Inspection 12-11
  Installation 12-12

Special Tools

Ref. No.	Tool Number	Description	Qty	Page Reference
①	07JAF—PM7011A	Clutch Alignment Disc	1	12-7
②	07LAB-PV00100 or 07924-PD20003	Ring Gear Holder	1	12-7, 8, 9, 10
③	07NAF-PR30100	Clutch Alignment Shaft	1	12-7, 8, 10
④	07746-0010100	Attachment, 32 x 35 mm	1	12-10
⑤	07749-0010000	Driver	1	12-10
⑥	07936-3710100	Handle	1	12-7, 8, 10

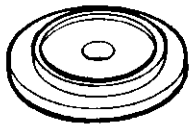

①

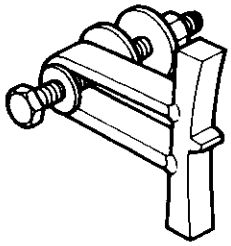

②

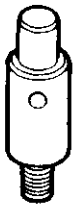

③

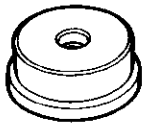

④

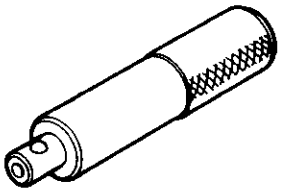

⑤

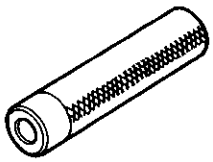

⑥

NOTE:
- Whenever the transmission is removed, clean and grease the release bearing sliding surface.
- If the parts marked * are removed, the clutch hydraulic system must be bled (see page 12-6).
- Inspect the hoses for damage, leaks, interference, and twisting.

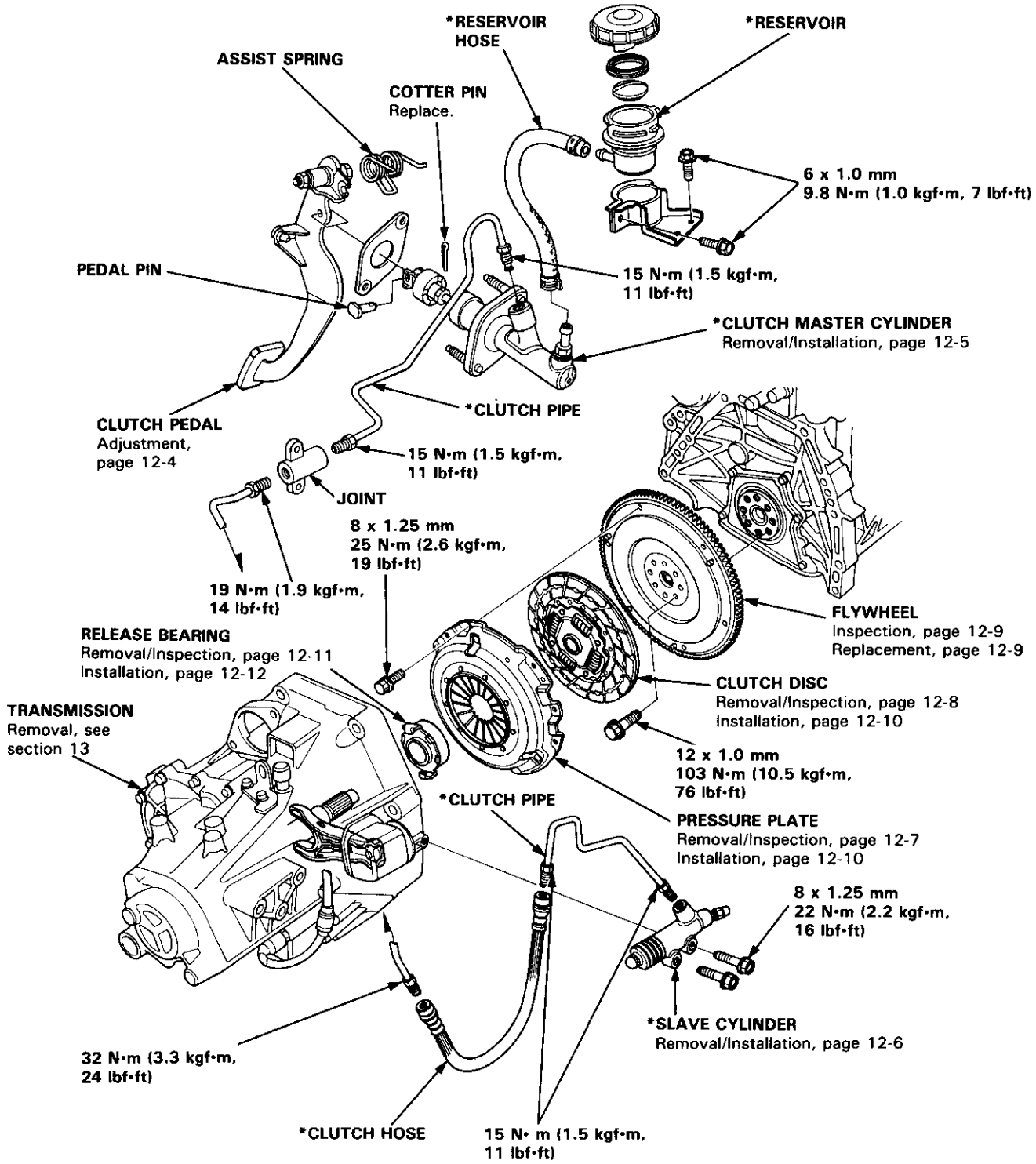

Clutch Pedal

Adjustment

NOTE:
- To check the clutch interlock switch and clutch switch, see section 23.
- The clutch is self-adjusting to compensate for wear.

CAUTION: If there is no clearance between the master cylinder piston and push rod, the release bearing is held against the diaphragm spring, which can result in clutch slippage or other clutch problems.

1. Loosen locknut A, and back off the clutch switch (or adjusting bolt) until it no longer touches the clutch pedal.
2. Loosen locknut C, and turn the push rod in or out to get the specified stroke (Ⓐ) and height (Ⓒ) at the clutch pedal.
3. Tighten locknut C.
4. Turn the clutch switch (or adjusting bolt) until it contacts the clutch pedal.
5. Turn the clutch switch (or adjusting bolt) in 3/4 to 1 full turn further.
6. Tighten locknut A.
7. Loosen locknut B and the clutch interlock switch.
8. Measure the clearance between the floor board and clutch pedal with the clutch pedal fully depressed.
9. Release the clutch pedal 15–20 mm (0.59–0.79 in) from the fully depressed position and hold it there. Adjust the position of the clutch interlock switch so that the engine will start with the clutch pedal in this position.
10. Turn clutch interlock switch 3/4 to 1 full turn further.
11. Tighten locknut B.

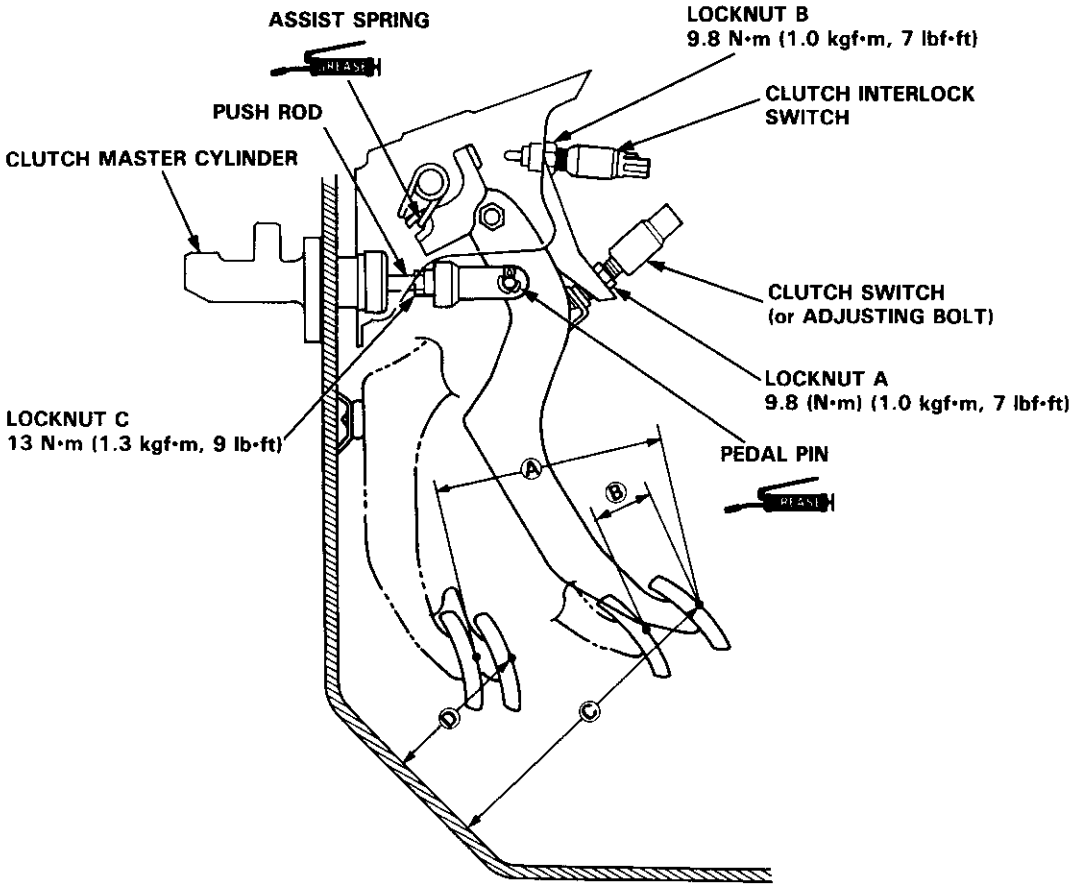

Ⓐ (STROKE at PEDAL): 130–140 mm (5.12–5.51 in)
Ⓑ (TOTAL CLUTCH PEDAL FREE PLAY): 12–21 mm (0.47–0.83 in) including the pedal play 1–10 mm (0.04–0.39 in)
Ⓒ (CLUTCH PEDAL HEIGHT): 164 mm (6.46 in) to the floor
Ⓓ (CLUTCH PEDAL DISENGAGEMENT HEIGHT): 83 mm (3.27 in) minimum to the floor

Clutch Master Cylinder

Removal/Installation

CAUTION:

- **Do not spill brake fluid on the car; it may damage the paint; if brake fluid does contact the paint, wash it off immediately with water.**
- **Plug the end of the clutch pipe and reservoir hose with a shop towel to prevent brake fluid from coming out.**

1. Remove the brake fluid from the clutch master cylinder reservoir with a syringe.

2. Disconnect the clutch pipe and reservoir hose from the clutch master cylinder.

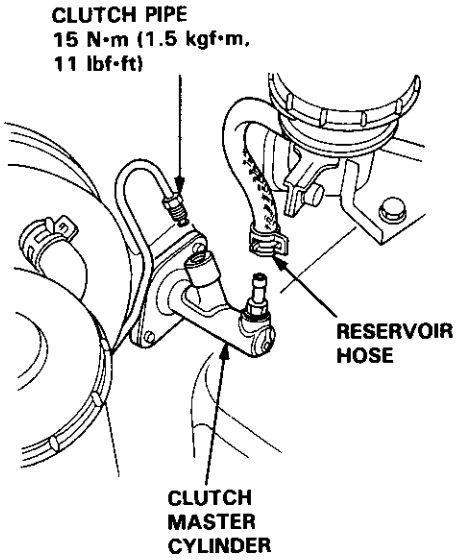

3. Pry out the cotter pin, and pull the pedal pin out of the yoke. Remove the nuts.

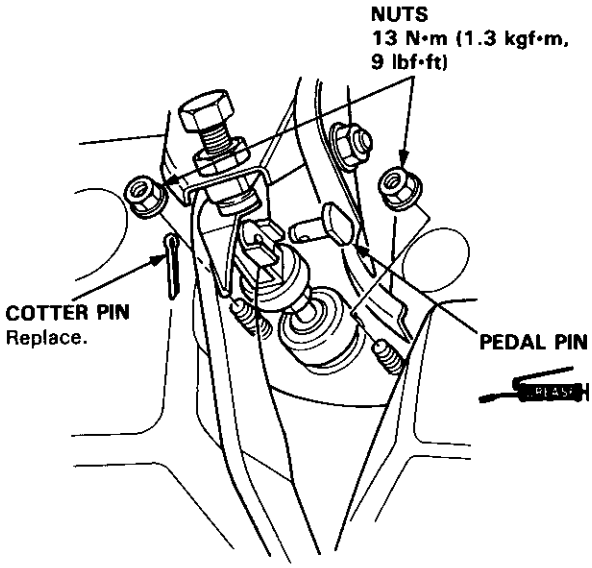

4. Remove the clutch master cylinder.

   NOTE: Do not spill brake fluid on the clutch master cylinder damper.

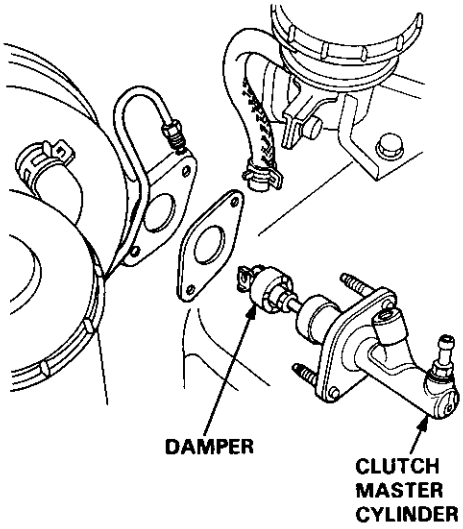

5. Install the clutch master cylinder in the reverse order of removal.

   NOTE: Bleed the clutch hydraulic system (see page 12-6).

Slave Cylinder

Removal/Installation

CAUTION:

- **Do not spill brake fluid on the car, it may damage the paint; if brake fluid does contact the paint, wash it off immediately with water.**
- **Plug the end of the clutch pipe with a shop towel to prevent brake fluid from coming out.**

GREASE: Super High Temp Urea Grease (P/N 08798–9002).
GREASE: Brake Assembly Lube or equivalent rubber grease.

1. Disconnect the clutch pipe from the slave cylinder.
2. Remove the slave cylinder from the clutch housing.

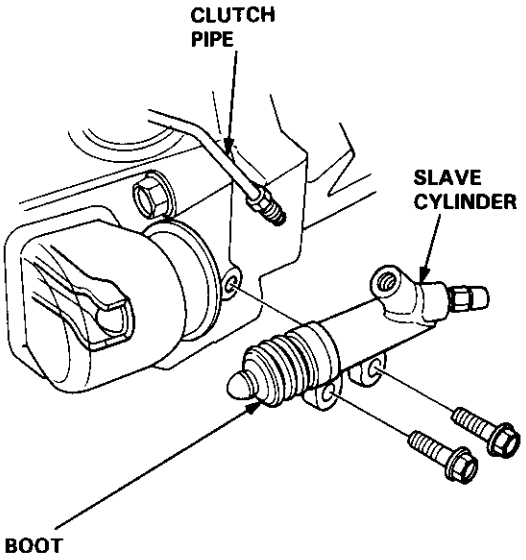

Remove and check for signs of leaking and deterioration.

3. Install the slave cylinder in the reverse order of removal.

   NOTE: Make sure the boot is installed on the slave cylinder.

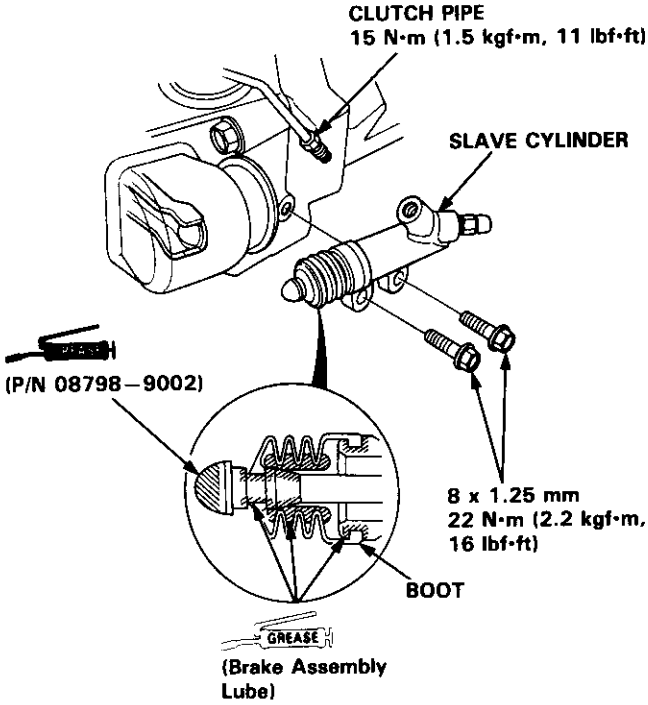

4. Bleed the clutch hydraulic system.
   - Attach a hose to the bleeder screw, and suspend the hose in a container of brake fluid.
   - Make sure there is an adequate supply of fluid at the clutch master cylinder, then slowly pump the clutch pedal until no more bubbles appear at the bleeder hose.
   - Refill the clutch master cylinder with fluid when done.
   - Use only DOT 3 or 4 brake fluid.

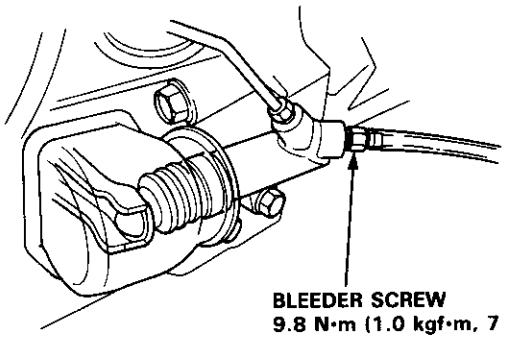

Pressure Plate

Removal/Inspection

1. Check the diaphragm spring fingers for height using the special tools and a feeler gauge.

   Standard (New): 0.6 mm (0.02 in) Max.
   Service Limit: 0.8 mm (0.03 in)

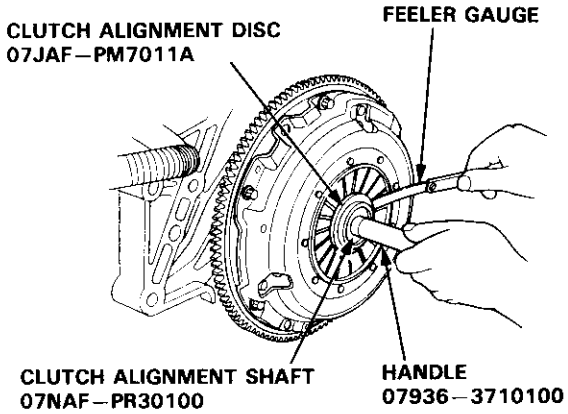

   - If the height is more than the service limit, replace the pressure plate.

2. Install the special tools.

3. To prevent warping, unscrew the pressure plate mounting bolts in a crisscross pattern in several steps, then remove the pressure plate.

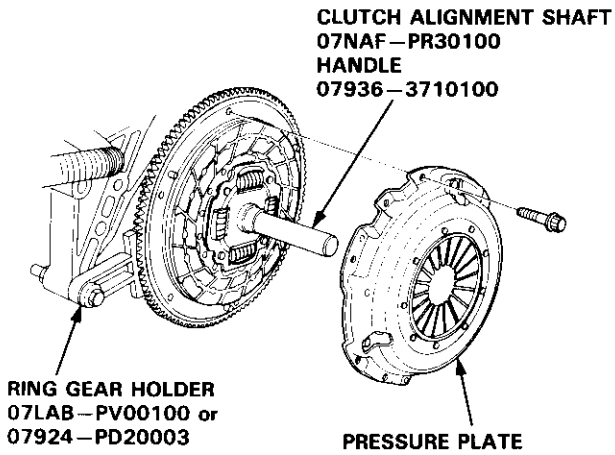

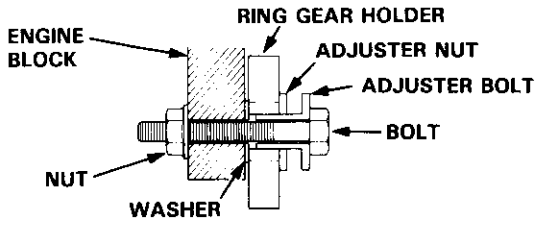

4. Inspect the pressure plate surface for wear, cracks, and burning.

5. Inspect the fingers of the diaphragm spring for wear at the release bearing contact area.

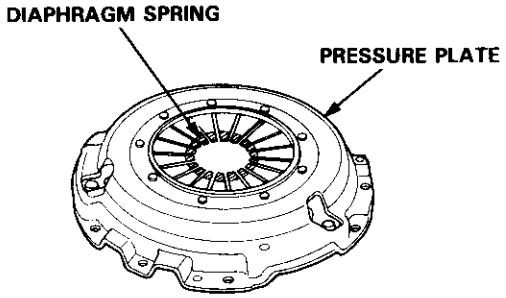

6. Inspect for warpage using a straight edge and feeler gauge.

   NOTE: Measure across the pressure plate at three points.

   Standard (New): 0.03 mm (0.001 in) Max.
   Service Limit: 0.15 mm (0.006 in)

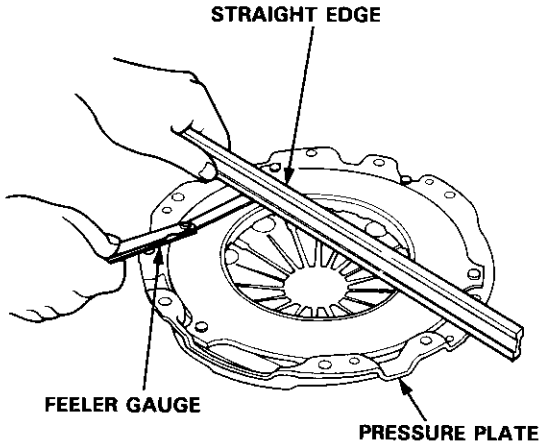

   - If the warpage is more than the service limit, replace the pressure plate.

Clutch Disc

Removal/Inspection

1. Remove the clutch disc and special tools.

2. Inspect the lining of the clutch disc for signs of slipping or oil. If it is burned black or oil soaked, replace it.

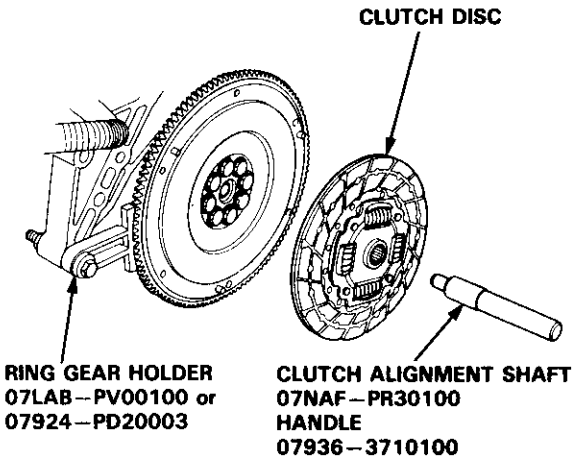

3. Measure the clutch disc thickness.

   Standard (New): 8.4–9.1 mm (0.33–0.36 in)
   Service Limit: 6.0 mm (0.24 in)

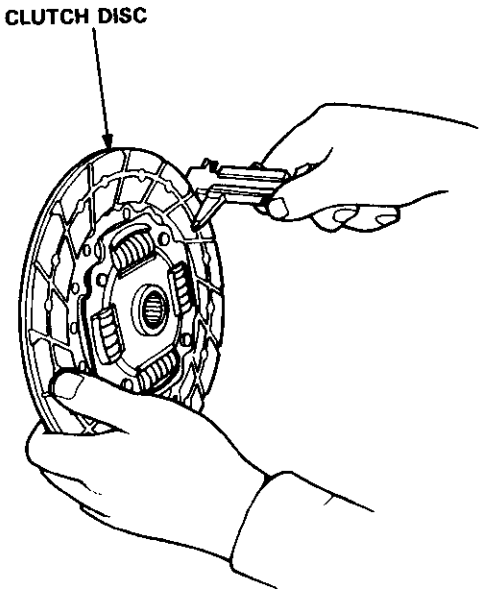

- If the thickness is less than the service limit, replace the clutch disc.

4. Measure the depth from the lining surface to the rivets, on both sides.

   Standard (New): 1.3 mm (0.05 in) Min.
   Service Limit: 0.2 mm (0.008 in)

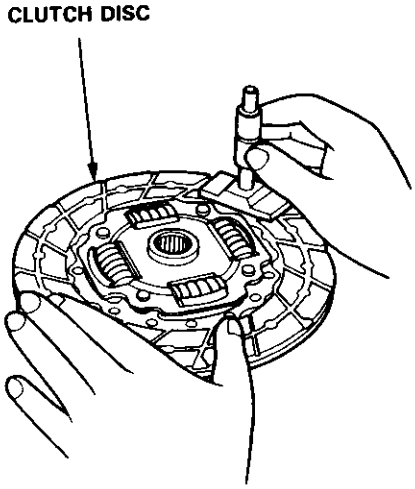

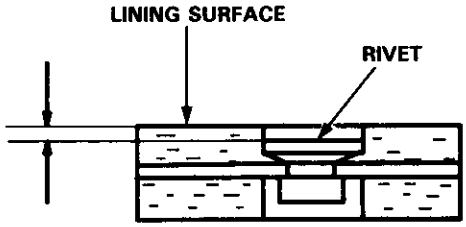

- If the rivet depth is less than the service limit, replace the clutch disc.

Flywheel, Flywheel Bearing

Inspection

1. Inspect the ring gear teeth for wear and damage.

2. Inspect the clutch disc mating surface on the flywheel for wear, cracks, and burning.

3. Measure the flywheel runout using a dial indicator through at least two full turns. Push against the flywheel each time you turn it to take up the crankshaft thrust washer clearance.

   NOTE: The runout can be measured with engine installed.

   Standard (New): 0.05 mm (0.002 in) Max.
   Service Limit: 0.15 mm (0.006 in)

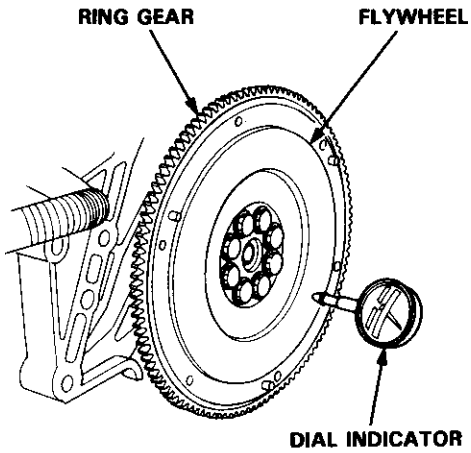

   - If the runout is more than the service limit, replace the flywheel.

4. Turn the inner race of the flywheel bearing with your finger. The bearing should turn smoothly and quietly. Check that the bearing outer race fits tightly in the flywheel.

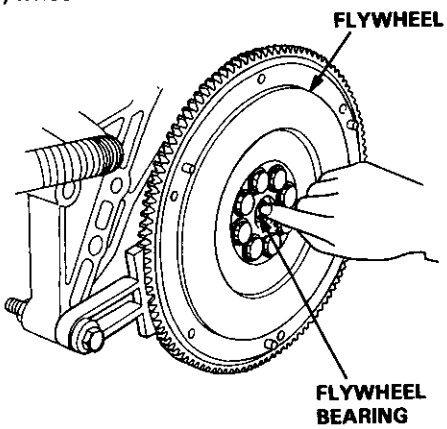

   - If the race does not turn smoothly, quietly, or fit tight in the flywheel, replace the flywheel bearing.

Replacement

1. Install the special tool.

2. Remove the flywheel mounting bolts in a crisscross pattern in several steps as shown, then remove the flywheel.

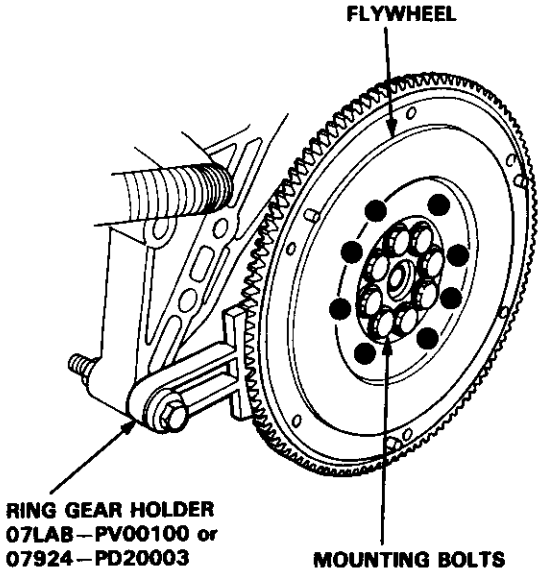

3. Remove the flywheel bearing from the flywheel.

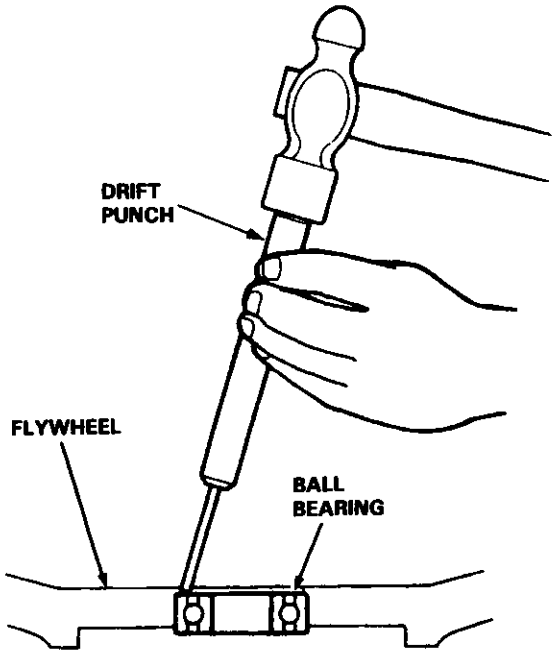

(cont'd)

Flywheel, Flywheel Bearing

Replacement (cont'd)

4. Drive the new flywheel bearing into the flywheel using the special tools as shown.

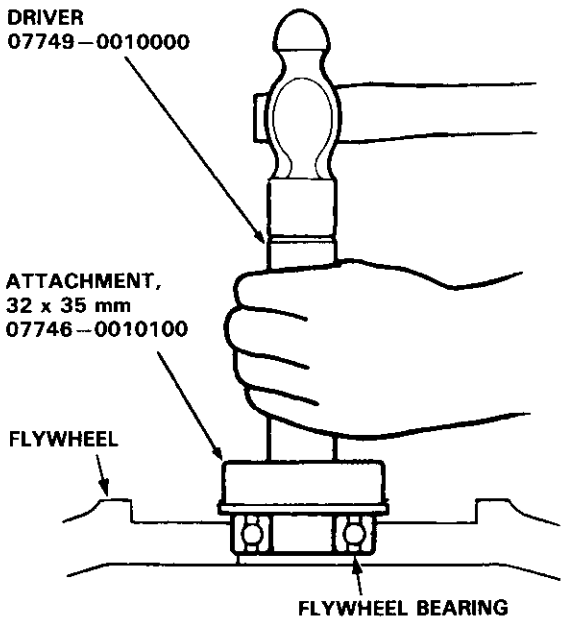

5. Align the hole in the flywheel with the crankshaft dowel pin and install the flywheel. Install the mounting bolts finger-tight.

6. Install the special tool as shown, then torque the flywheel mounting bolts in a crisscross pattern in several steps as shown.

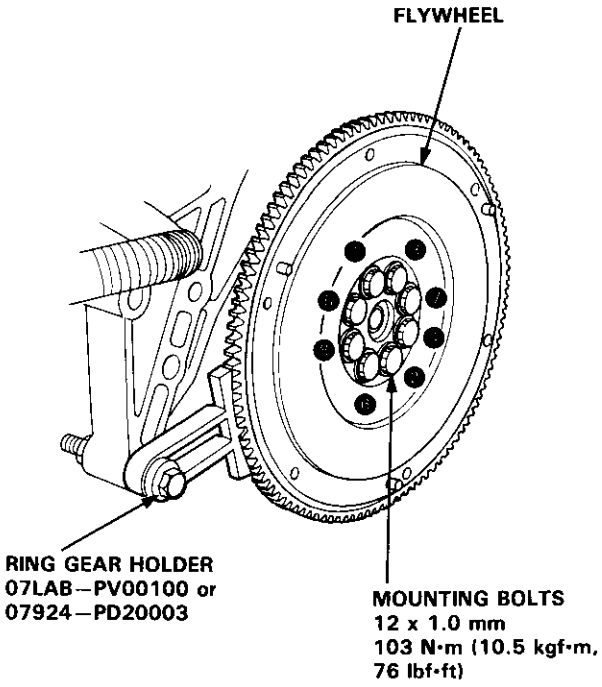

Clutch Disc, Pressure Plate

Installation

1. Install the ring gear holder.

2. Apply grease to the spline of the clutch disc, then install the clutch disc using the special tools as shown.

   NOTE: Use only Super High Temp Urea Grease (P/N 08798–9002).

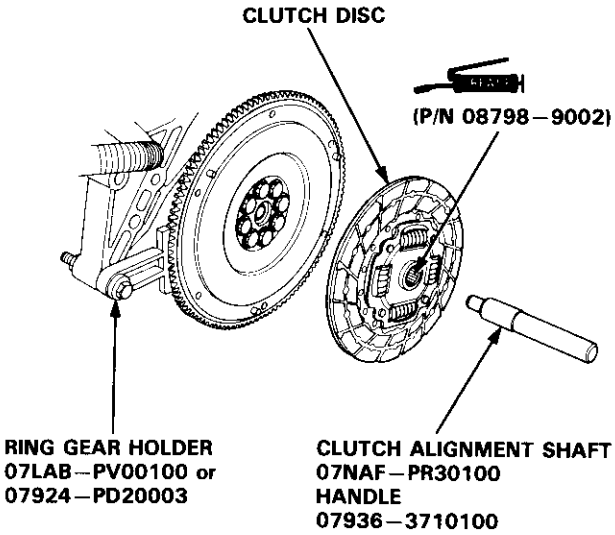

3. Install the pressure plate.

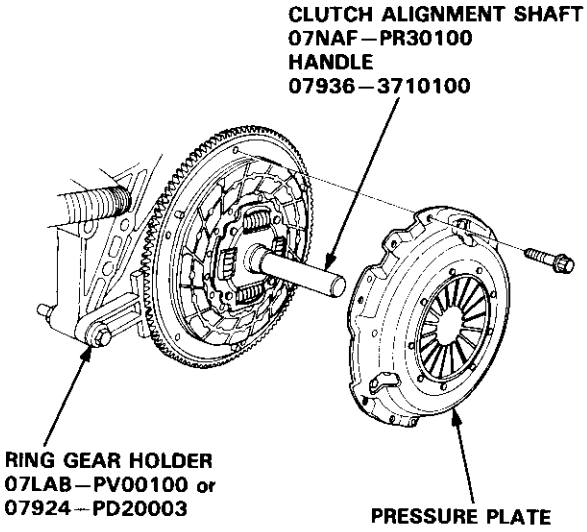

4. Torque the mounting bolts in a crisscross pattern as shown. Tighten the bolts in several steps to prevent warping the diaphragm spring.

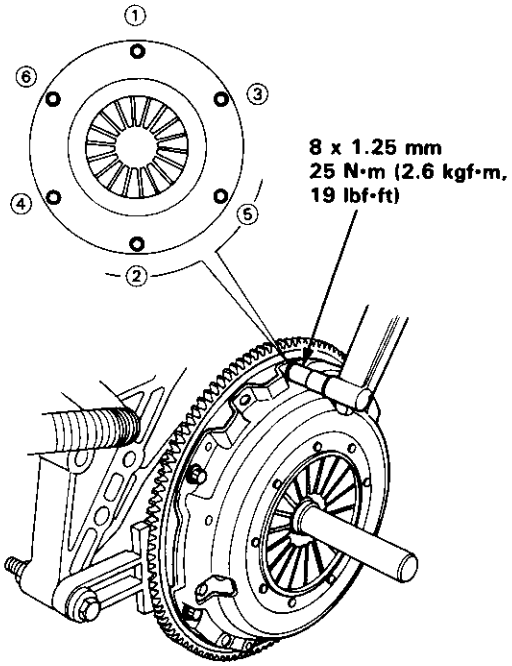

5. Remove the special tools.

6. Recheck the diaphragm spring fingers for height (see page 12-7).

Release Bearing

Removal/Inspection

1. Remove the release fork boot from the clutch housing.

2. Remove the release fork from the clutch housing by squeezing the release fork set spring with pliers. Remove the release bearing.

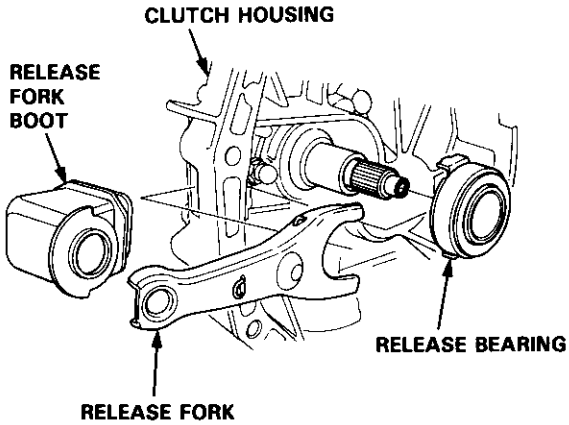

3. Check the release bearing for play by spinning it by hand.

CAUTION: The release bearing is packed with grease. Do not wash it in solvent.

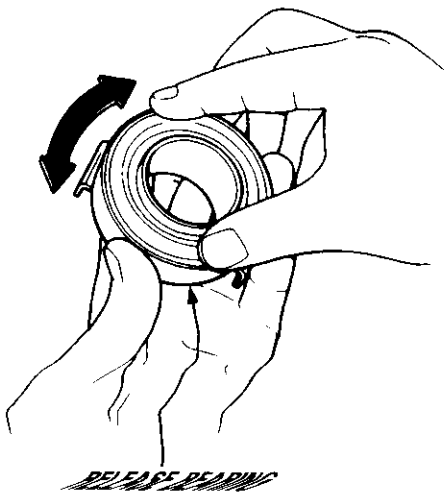

- If there is excessive play, replace the release bearing with a new one.

Release Bearing

Installation

1. With the release fork slid between the release bearing pawls, install the release bearing on the mainshaft while inserting the release fork through the hole in the clutch housing.

2. Align the detent of the release fork with the release fork bolt, then press the release fork over the release fork bolt.

   NOTE: Use only Super High Temp Urea Grease (P/N 08798–9002).

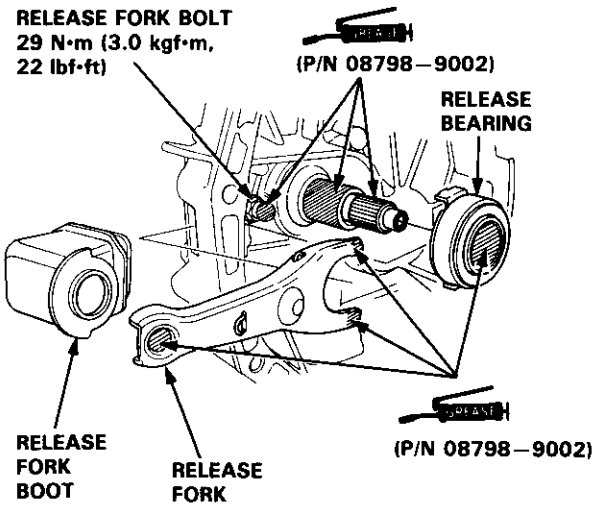

3. Move the release fork right and left to make sure that the fork fits properly against the release bearing, and that the release bearing slides smoothly.

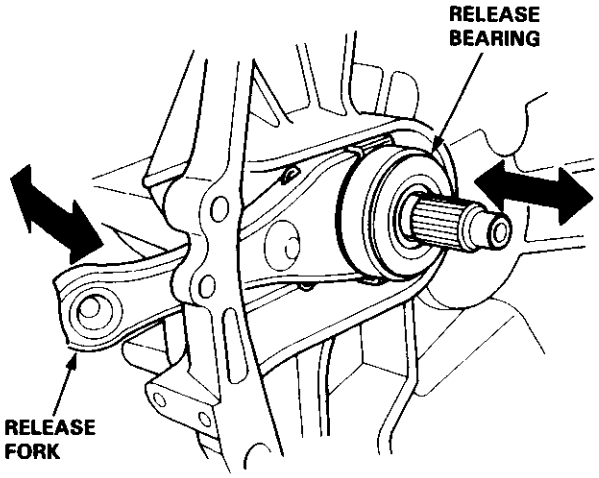

4. Install the release fork boot.

Manual Transmission

Special Tools 13-2
Maintenance
  Transmission Oil 13-3
Back-up Light Switch
  Replacement 13-3
Transmission Assembly
  Removal 13-4
Illustrated Index 13-8
Transmission Housing
  Removal 13-10
Reverse Change Holder, Reverse Idler Gear
  Clearance Inspection 13-11
  Removal 13-12
Change Holder Assembly
  Clearance Inspection 13-13
  Removal 13-15
  Disassembly/Reassembly 13-16
Mainshaft, Countershaft, Shift Fork
  Removal 13-17
Shift Rod
  Removal 13-18
Shift Fork Assembly
  Index 13-19
  Clearance Inspection 13-20
Mainshaft Assembly
  Index 13-21
  Clearance Inspection 13-22
  Disassembly 13-25
  Inspection 13-26
  Reassembly 13-27
Countershaft Assembly
  Index 13-28
  Clearance Inspection 13-29
  Disassembly 13-30
  Inspection 13-31
  Reassembly 13-32
Synchro Sleeve, Synchro Hub
  Inspection 13-34
  Installation 13-34
Synchro Ring, Gear
  Inspection 13-35
Clutch Housing Bearing
  Replacement 13-36
Mainshaft Thrust Clearance
  Adjustment 13-38
Transmission
  Reassembly 13-41
Transmission Assembly
  Installation 13-46
Gearshift Mechanism
  Overhaul 13-50

Special Tools

Ref. No.	Tool Number	Description	Qty	Page Reference
①	07GAJ – PG20110	Mainshaft Holder	1	13 – 40
②	07GAJ – PG20130	Mainshaft Base	1	13 – 40
③	*07736 – A01000A	Adjustable Bearing Puller, 25 – 40 mm	1	13 – 36, 37
④	07746 – 0010300	Attachment, 42 x 47 mm	1	13 – 36
⑤	07746 – 0010400	Attachment, 52 x 55 mm	1	13 – 36, 37
⑥	07746 – 0030100	Driver, 40 mm I.D.	1	13 – 27, 33
⑦	07746 – 0030300	Attachment, 30 mm I.D.	1	13 – 27, 33
⑧	07746 – 0030400	Attachment, 35 mm I.D.	1	13 – 27, 33
⑨	07746 – 0041100	Pilot, 28 mm	1	13 – 36
⑩	07749 – 0010000	Driver	1	13 – 36, 37

* Must be used with commercially available 3/8" – 16 Slide Hammer.

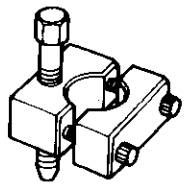

①

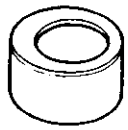

②

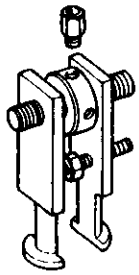

③

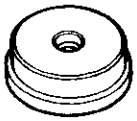

④

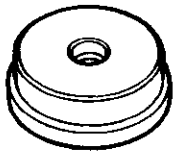

⑤

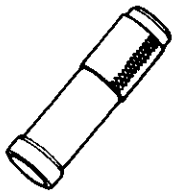

⑥

⑦

⑧

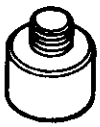

⑨

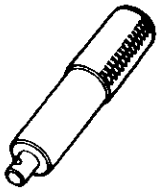

⑩

Maintenance

Transmission Oil

NOTE: Check the oil with the engine OFF, and the car on level ground.

1. Remove the oil filler plug, then check the level and condition of the oil.

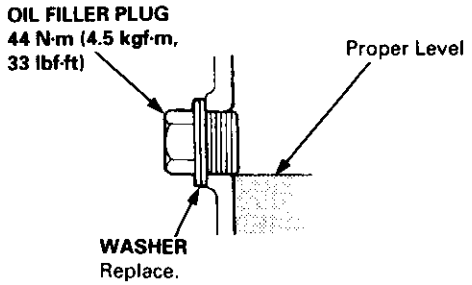

2. The oil level must be up to the filler hole. If it is below the hole, add oil until it runs out, then reinstall the oil filler plug.

3. If the transmission oil is dirty, remove the drain plug and drain the oil.

4. Reinstall the drain plug with a new washer, and refill the transmission oil to the proper level.

   NOTE: The drain plug washer should be replaced at every oil change.

5 Reinstall the oil filler plug with a new washer.

   Oil Capacity
   2.2 ℓ (2.3 US.qt, 1.9 Imp.qt) at oil change.
   2.3 ℓ (2.4 US.qt, 2.0 Imp.qt) at overhaul.

   Use only SAE 10 W – 30 or 10 W – 40, API Service SF or SG grade.

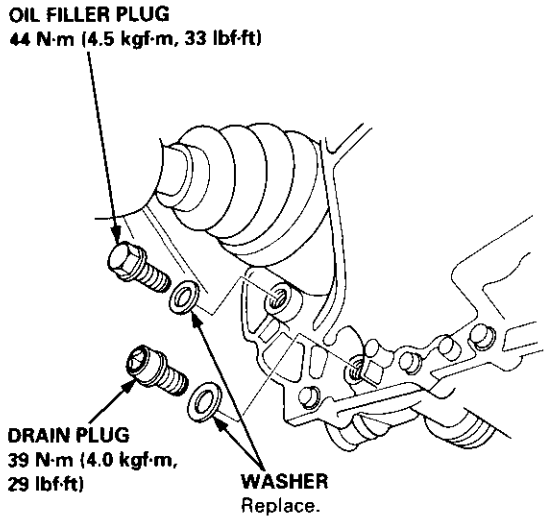

Back-up Light Switch

Replacement

NOTE: To check the back-up light switch, see section 23.

1. Disconnect the connector, then remove the back-up light switch connector from the connector clamp.

2. Remove the back-up light switch.

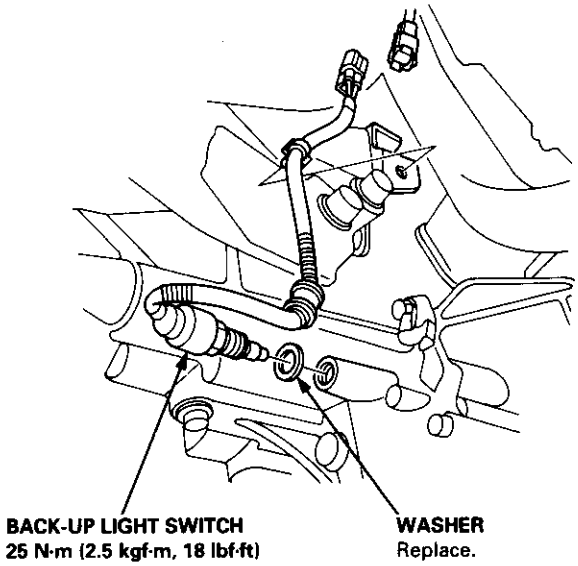

3. Install the new washer and the back-up light switch.

4. Check the transmission oil level (see page 13-3).

Transmission Assembly

Removal

⚠ WARNING

- **Make sure jacks and safety stands are placed properly (see section 1).**
- **Apply parking brake and block rear wheels so car will not roll off stands and fall on you while working under it.**

CAUTION: Use fender covers to avoid damaging painted surfaces.

1. Disconnect the negative (–) cable from the battery, then the positive (+) cable.
2. Drain the transmission oil, then reinstall the drain plug with a new washer (see page 13-3).
3. Remove the intake air duct and the air cleaner housing assembly.

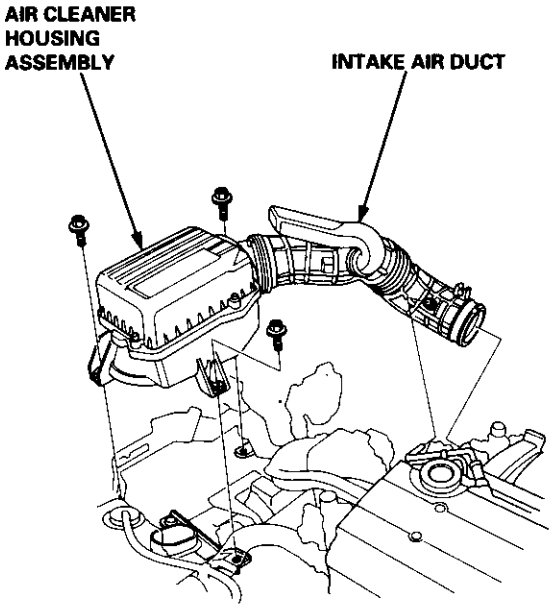

4. Disconnect the back-up light switch connector and the transmission ground wire.
5. Remove the lower radiator hose clamp from the transmission hanger B.

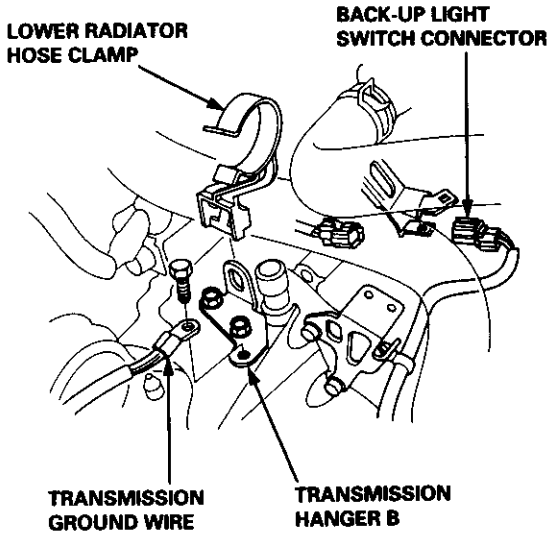

6. Remove the wire harness clamps.
7. Disconnect the starter motor cables and the vehicle speed sensor (VSS) connector.

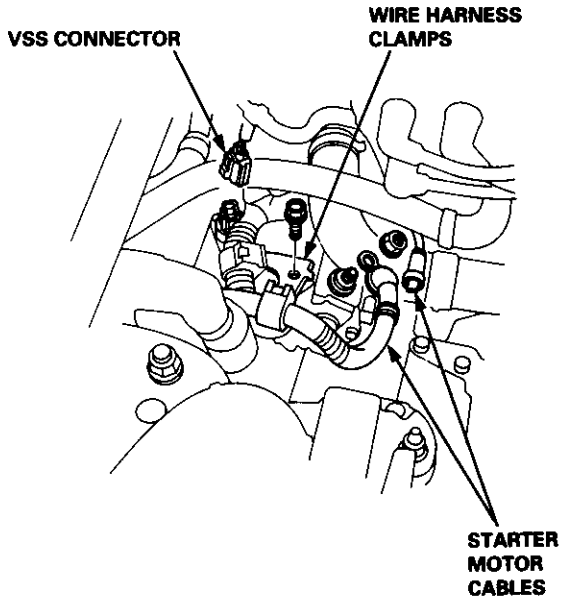

8. Remove the clutch pipe bracket and the slave cylinder.

NOTE: Do not operate the clutch pedal once the slave cylinder has been removed.

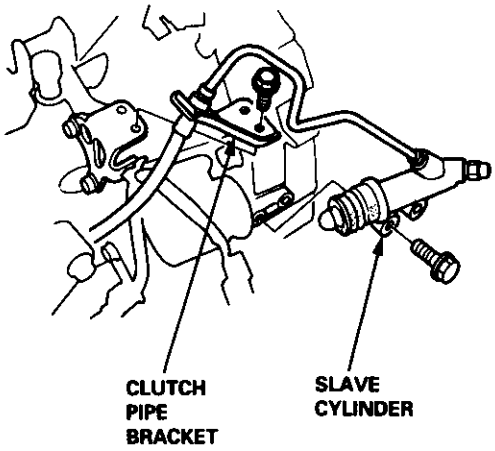

9. Remove the three upper transmission mounting bolts and lower starter motor mounting bolt.

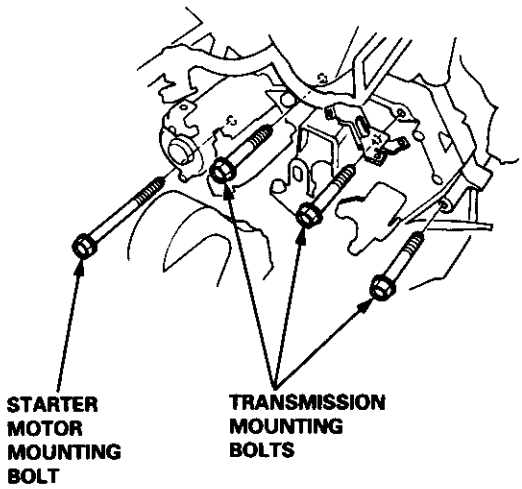

10. Remove the engine splash shield.

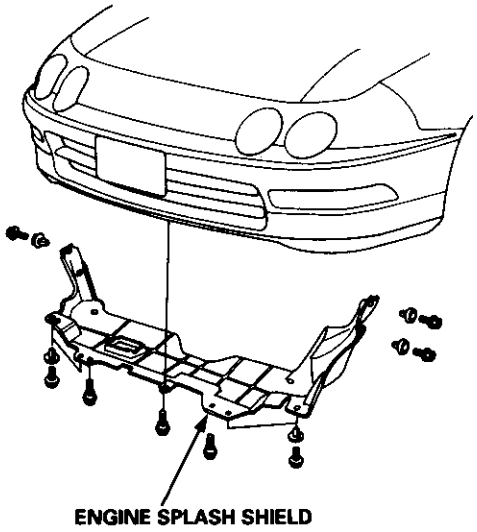

11. Disconnect the heated oxygen sensor (HO2S) connector, then remove the exhaust pipe A, and the three way catalytic converter (B18C1 Engine).

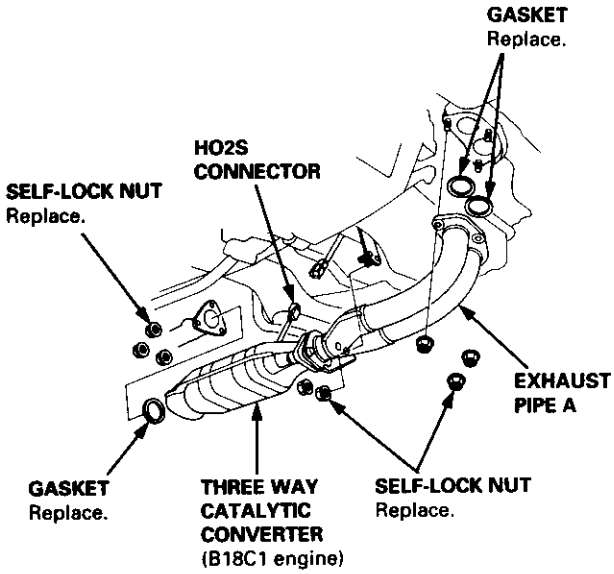

(cont'd)

Removal (cont'd)

12. Remove the cotter pins and loosen the castle nuts, then separate the ball joints from the lower arm (see section 18).

13. Remove the right damper fork.

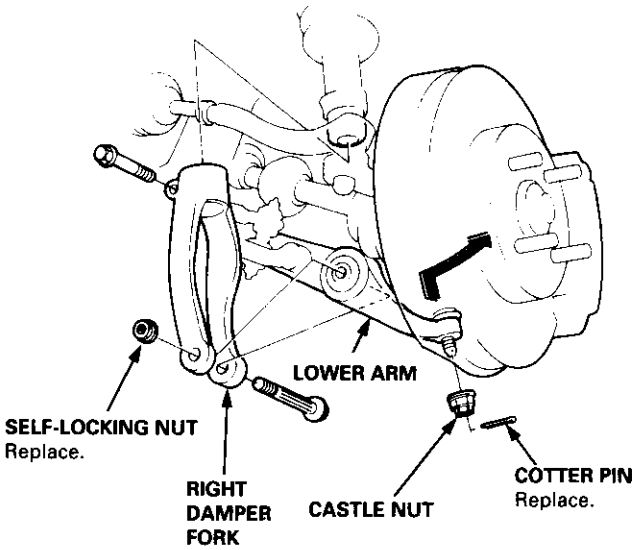

14. Remove the driveshafts and the intermediate shaft (see section 16).

NOTE: Coat all precision finished surfaces with clean engine oil or grease. Tie plastic bags over the driveshaft ends.

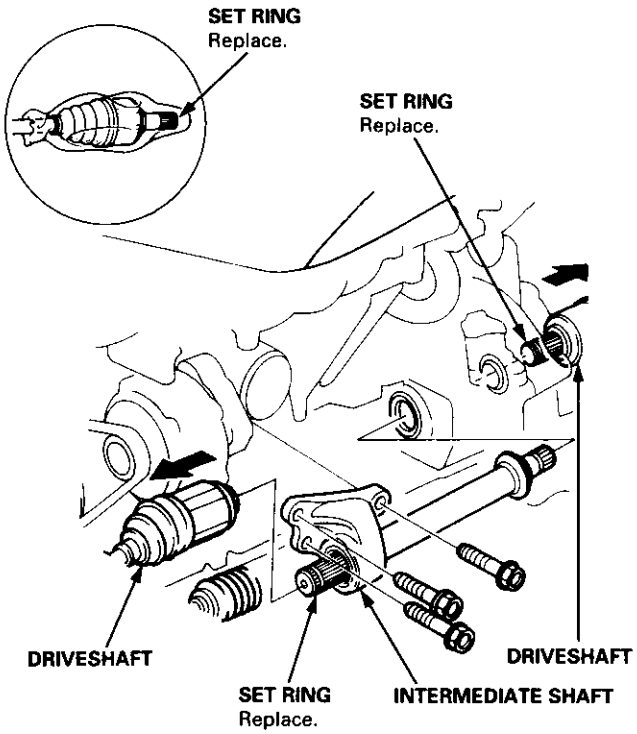

15. Remove the heat shield (B18C1 engine).

16. Remove the bolt, then disconnect the change extension.

17. Remove the clip and the spring pin, then disconnect the change rod.

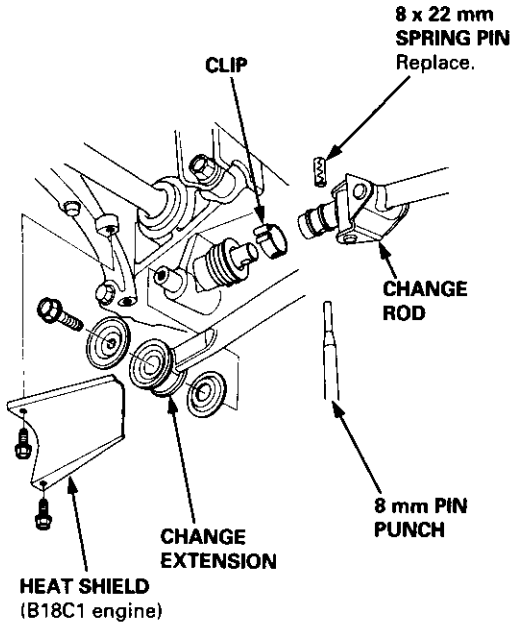

18. Remove the front (B18C1 engine) and the rear engine stiffeners.

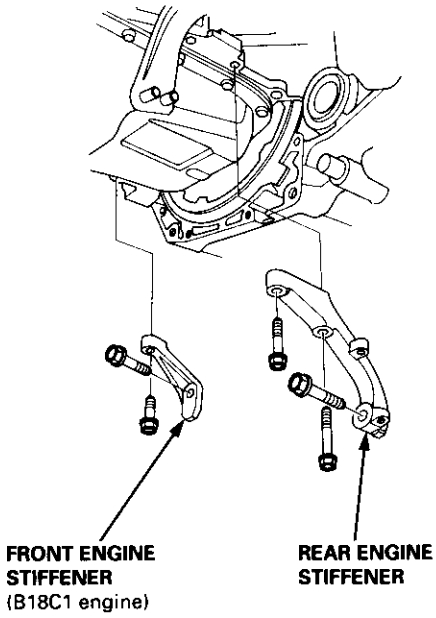

19. Remove the clutch cover.

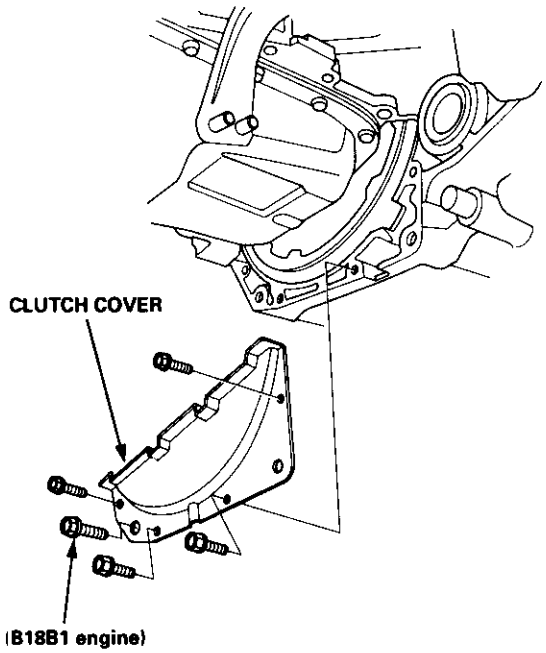

20. Remove the right front mount/bracket.

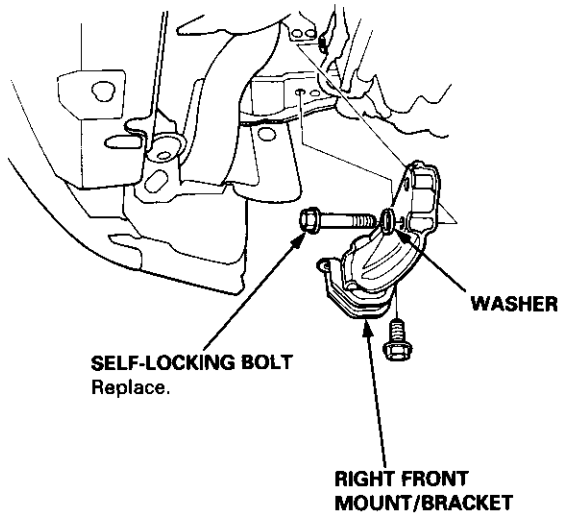

21. Place a transmission jack under the transmission and a jack stand under the engine.

22. Remove the transmission mount.

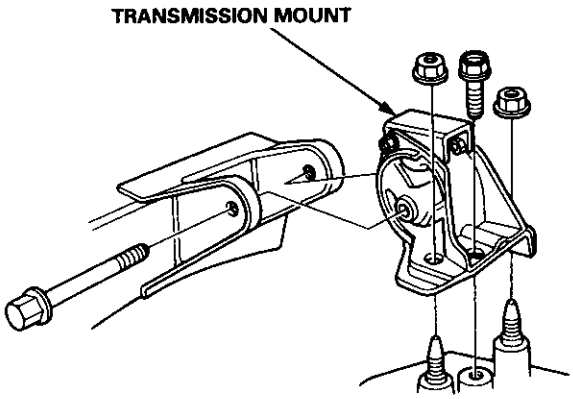

23. Remove the rear mount bracket bolts and the transmission mounting bolts.

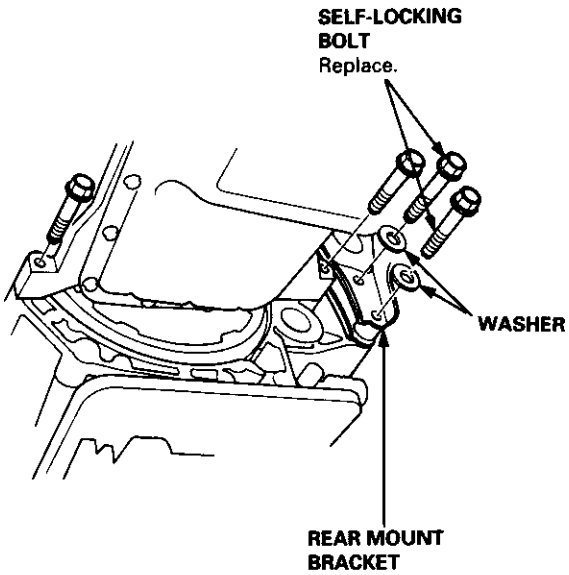

24. Pull the transmission away from the engine until it clears the mainshaft, then lower it on the transmission jack.

Refer to the drawing below for the transmission disassembly/reassembly.
Clean all the parts thoroughly in solvent and dry with compressed air.

Lubricate all the parts with oil before reassembly.

NOTE:

- This transmission uses no gaskets between the major housings; use liquid gasket (P/N 08718-0001) (see page 13-43).
- Always clean the magnet ⑦⑦ whenever the transmission housing is disassembled.
- Inspect all the bearings for wear and operation.

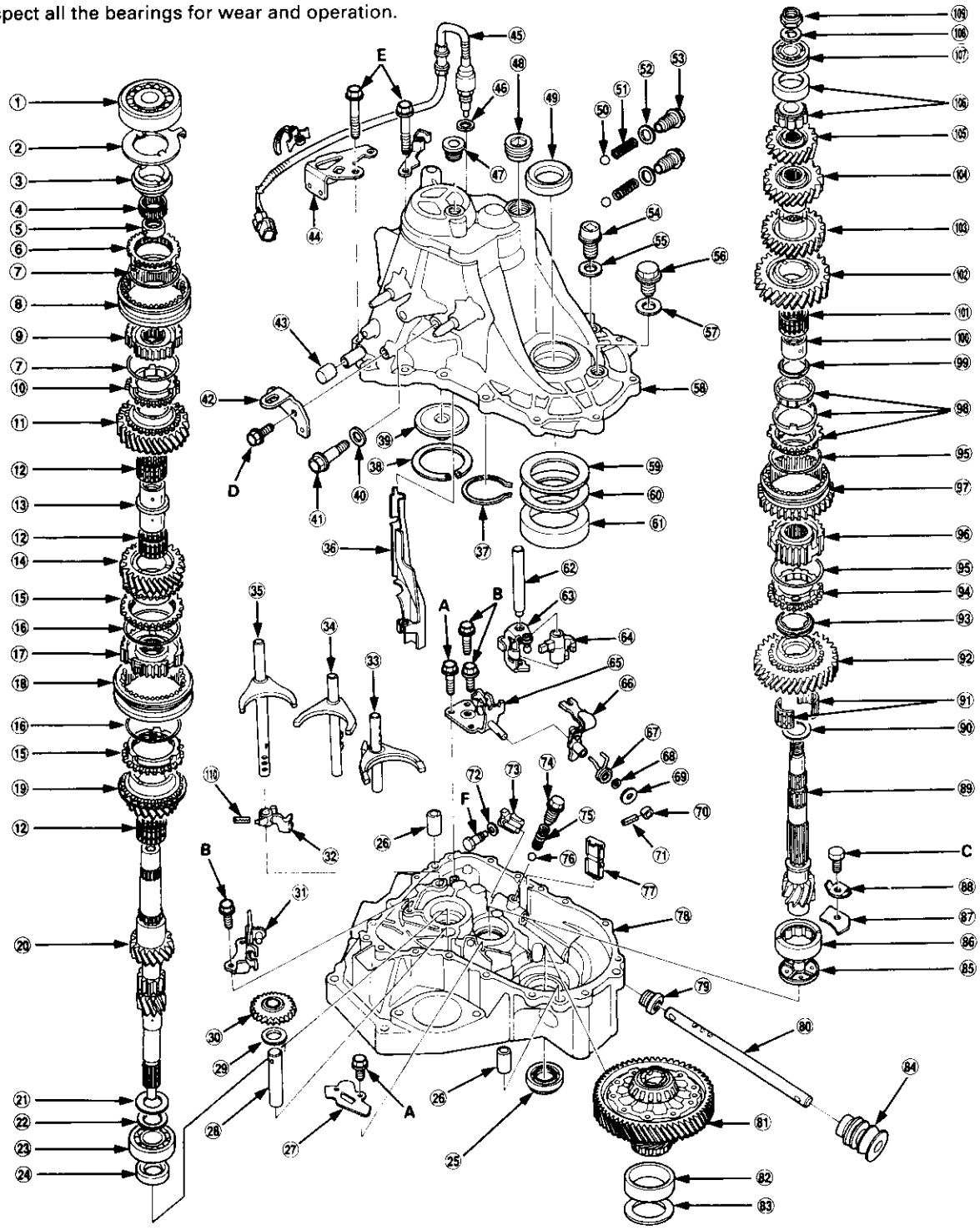

	Bolt Size	Torque Value
A	6 x 1.0 mm	12 N·m (1.2 kgf·m, 9 lbf·ft)
B	6 x 1.0 mm	15 N·m (1.5 kgf·m, 11 lbf·ft)
C	8 x 1.0 mm	15 N·m (1.5 kgf·m, 11 lbf·ft)
D	8 x 1.25 mm	24 N·m (2.4 kgf·m, 17 lbf·ft)
E	8 x 1.25 mm	27 N·m (2.8 kgf·m, 20 lbf·ft)
F	8 x 1.0 mm	30 N·m (3.1 kgf·m, 22 lbf·ft)

1. **BALL BEARING**
2. **STOPPER RING**
3. **TAPER RING**
4. **NEEDLE BEARING**
5. **SPACER**
6. **SYNCHRO RING**
7. **SYNCHRO SPRING**
8. **5TH/REVERSE SYNCHRO SLEEVE**
9. **5TH/REVERSE SYNCHRO HUB**
10. **SYNCHRO RING**
11. **5TH GEAR**
12. **38 x 43 x 26 mm NEEDLE BEARING**
13. **SPACER COLLAR**
14. **4TH GEAR**
15. **SYNCHRO RING**
16. **SYNCHRO SPRING**
17. **3RD/4TH SYNCHRO HUB**
18. **3RD/4TH SYNCHRO SLEEVE**
19. **3RD GEAR**
20. **MAINSHAFT**
21. **WASHER**
22. **SPRING WASHER**
23. **BALL BEARING**
24. **28 x 41 x 7 mm OIL SEAL** Replace.
25. **35 x 56 x 8 mm OIL SEAL** Replace.
26. **14 x 20 mm DOWEL PIN**
27. **OIL CHAMBER PLATE**
28. **REVERSE IDLER GEAR SHAFT**
29. **WASHER (*2)**
30. **REVERSE IDLER GEAR**
31. **REVERSE CHANGE HOLDER**
32. **5TH/REVERSE SHIFT PIECE**
33. **1ST/2ND SHIFT FORK**
34. **3RD/4TH SHIFT FORK**
35. **5TH/REVERSE SHIFT FORK**
36. **OIL GUTTER PLATE**
37. **SNAP RING**
38. **72 mm THRUST SHIM**
39. **OIL GUIDE PLATE**
40. **10 mm WASHER** Replace.
41. **REVERSE IDLER GEAR SHAFT BOLT**
    54 N·m (5.5 kgf·m, 40 lbf·ft)
42. **TRANSMISSION HANGER B**
43. **BREATHER CAP**
44. **TRANSMISSION HANGER A**
45. **BACK-UP LIGHT SWITCH**
    25 N·m (2.5 kgf·m, 18 lbf·ft)
46. **14 mm WASHER** Replace.
47. **16 mm SEALING BOLT**
    29 N·m (3.0 kgf·m, 22 lbf·ft)
48. **32 mm SEALING BOLT**
    25 N·m (2.5 kgf·m, 18 lbf·ft)
49. **40 x 62 x 9 mm OIL SEAL** Replace.
50. **STEEL BALL D. 5/16 in**
51. **SPRING L. 30 mm (1.2 in)**
52. **12 mm WASHER** Replace.
53. **SET SCREW**
    22 N·m (2.2 kgf·m, 16 lbf·ft)
54. **OIL DRAIN PLUG**
    39 N·m (4.0 kgf·m, 29 lbf·ft)
55. **WASHER** Replace.
56. **OIL FILLER PLUG**
    44 N·m (4.5 kgf·m, 33 lbf·ft)
57. **WASHER** Replace.
58. **TRANSMISSION HOUSING**
59. **80 mm SHIM (*1)**
    79.5 mm SHIM (*2)
60. **THRUST SHIM (*2)**
    T. 2.0 mm (0.079 in)
61. **BEARING OUTER RACE (*2)**
62. **SHIFT PIECE SHAFT**
63. **INTERLOCK**
64. **SHIFT PIECE**
65. **SHIFT ARM HOLDER**
66. **SELECT ARM**
67. **SELECT RETURN SPRING**
68. **10 mm SHIM**
69. **10 mm WASHER**
70. **LOCK COLLAR**
71. **3 x 16 mm SPRING PIN** Replace.
72. **8 mm SPRING WASHER**
73. **CHANGE PIECE**
74. **SET SCREW**
    22 N·m (2.2 kgf·m, 16 lbf·ft)
75. **SPRING L. 25.6 mm (1.01 in)**
76. **STEEL BALL D. 5/16 in**
77. **MAGNET**
78. **CLUTCH HOUSING**
79. **14 x 25 x 16 mm OIL SEAL** Replace.
80. **SHIFT ROD**
81. **DIFFERENTIAL ASSEMBLY**
    See section 15
82. **BEARING OUTER RACE (*2)**
83. **THRUST SHIM (*2)**
    T. 2.5 mm (0.098 in)
84. **SHIFT ROD BOOT**
85. **OIL GUIDE PLATE**
86. **33 x 60 x 20 mm NEEDLE BEARING**
87. **BEARING RETAINER PLATE**
88. **LOCK WASHER** Replace.
89. **COUNTERSHAFT**
90. **THRUST SHIM**
91. **37 x 42 x 25 mm NEEDLE BEARING**
92. **1ST GEAR**
93. **FRICTION DAMPER**
94. **SYNCHRO RING**
95. **SYNCHRO SPRING**
96. **1ST/2ND SYNCHRO HUB**
97. **REVERSE GEAR**
98. **DOUBLE CONE SYNCHRO (*2)**
    SYNCHRO RING (*1)
99. **FRICTION DAMPER**
100. **SPACER**
101. **42 x 47 x 24 mm NEEDLE BEARING**
102. **2ND GEAR**
103. **3RD GEAR**
104. **4TH GEAR**
105. **5TH GEAR**
106. **NEEDLE BEARING**
107. **BALL BEARING**
108. **SPRING WASHER**
109. **LOCKNUT** Replace.
     108 → 0 → 108 N·m
     (11.0 → 0 → 11.0 kgf·m,
     80 → 0 → 80 lbf·ft)
110. **5 x 22 mm SPRING PIN** Replace.

***1: B18B1 engine**
***2: B18C1 engine**

Transmission Housing

Removal

NOTE:
- If the transmission housing or clutch housing are replaced, the bearing preload must be adjusted (B18C1 engine).
- Place the clutch housing on two pieces of wood thick enough to keep the mainshaft from the hitting the workbench.

1. Remove the back-up light switch.
2. Remove the transmission hanger B.
3. Remove the set screws, the springs, and the steel balls.

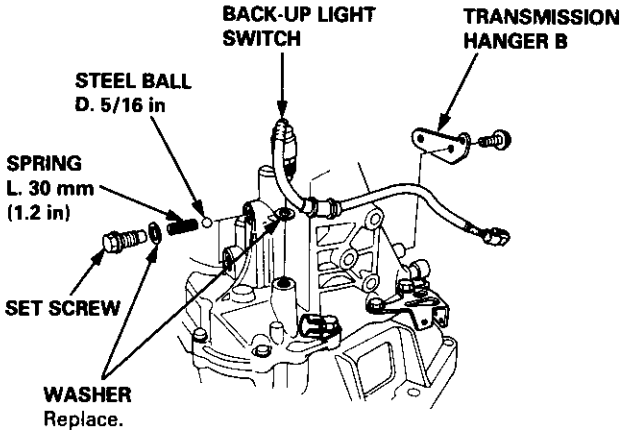

4. Remove the reverse idler gear shaft bolt.

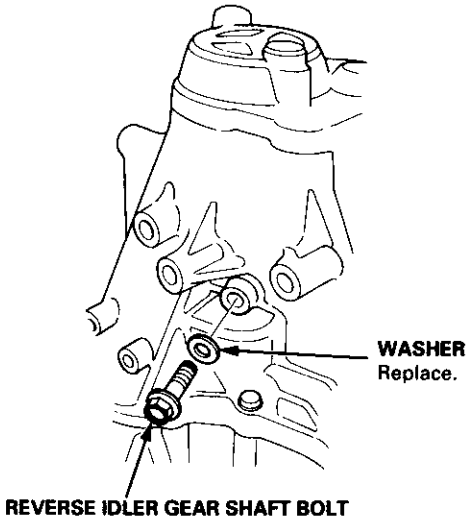

5. Loosen the transmission housing attaching bolts in a crisscross pattern in several steps, then remove them.

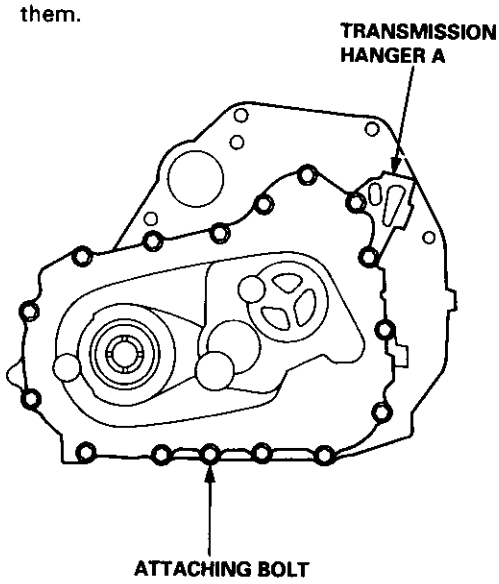

6. Remove the 32 mm sealing bolt.
7. Expand the snap ring on the countershaft ball bearing and remove it from the groove using a pair of snap ring pliers.

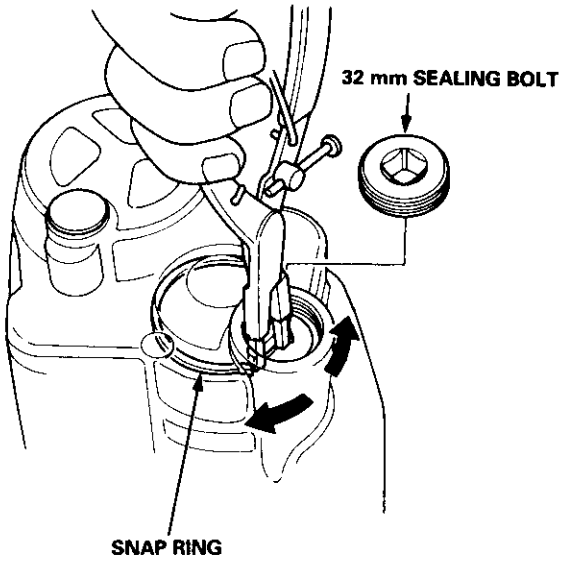

8. Separate the transmission housing from the clutch housing, and wipe it clean of the sealant.

9. Remove the 72 mm thrust shim and the oil guide plate from the transmission housing.

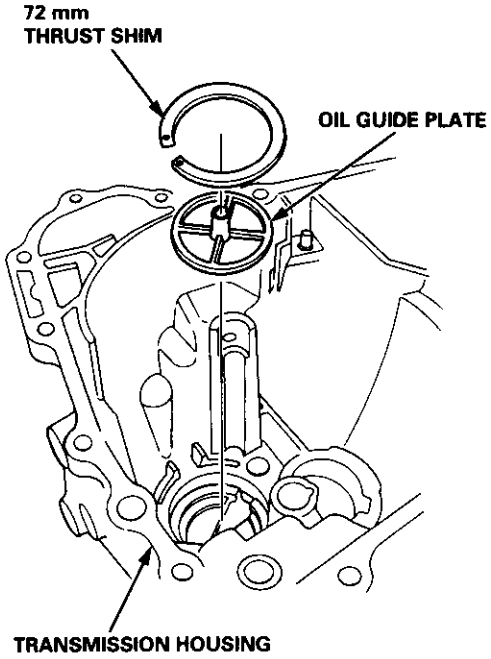

10. Remove the 16 mm sealing bolt and the oil gutter plate.

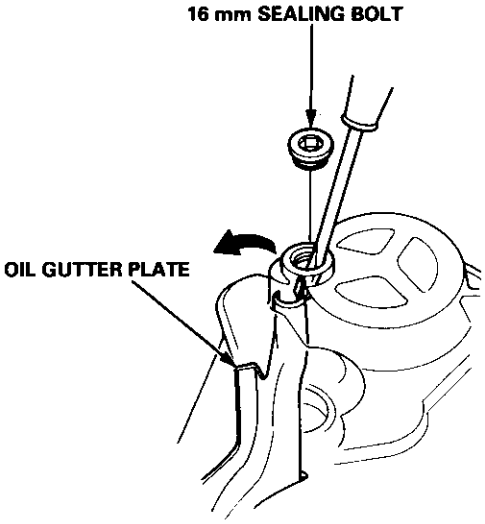

Clearance Inspection

1. Measure the clearance between the reverse change holder and the 5th/reverse shift piece pin.

Standard:
Reverse Side: 0.05 – 0.45 mm (0.002 – 0.018 in)
5th Side: 0.4 – 0.9 mm (0.02 – 0.04 in)

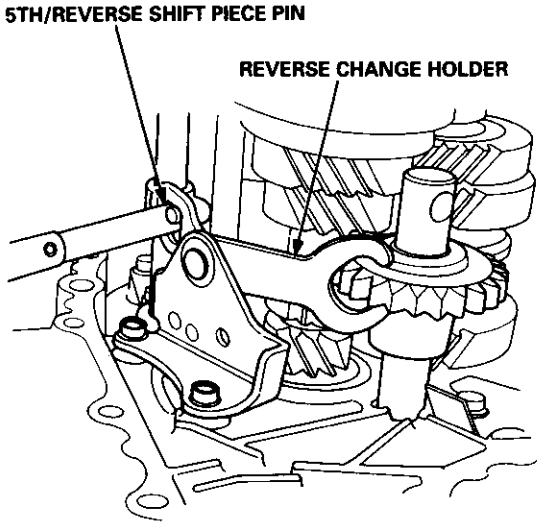

2. If the clearance are not within the standard, measure the width of the grooves in the reverse change holder.

Standard:
Reverse Side: 7.05 – 7.25 mm (0.278 – 0.285 in)
5th Side: 7.4 – 7.7 mm (0.29 – 0.30 in)

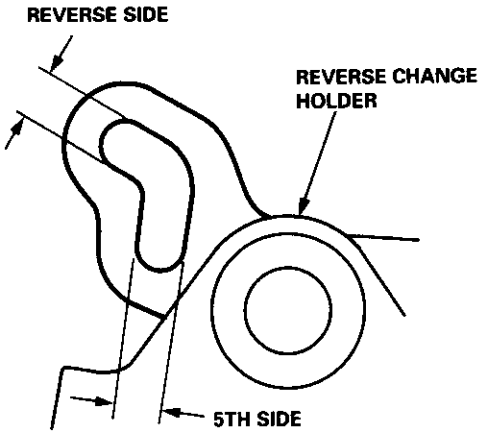

- If the width of the grooves are not within the standard, replace the reverse change holder with a new one.
- If the width of the grooves are within the standard, replace the 5th/reverse shift piece with a new one.

(cont'd)

Reverse Change Holder, Reverse Idler Gear

Clearance Inspection (cont'd)

3. Measure the clearance between the reverse idler gear and the reverse change holder.

   Standard: 0.5 – 1.1 mm (0.02 – 0.04 in)
   Service Limit: 1.8 mm (0.07 in)

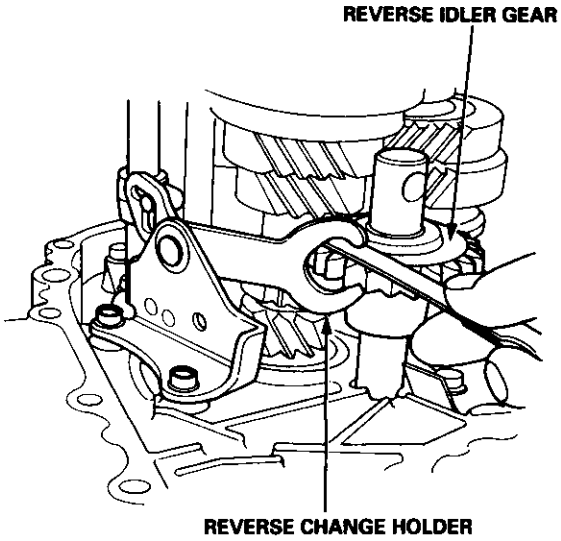

4. If the clearance is more than the service limit, measure the width of the reverse change holder.

   Standard: 13.0 – 13.3 mm (0.512 – 0.524 in)

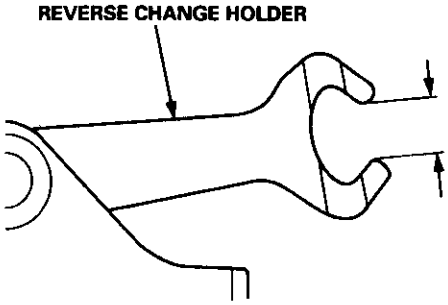

- If the width is not within the standard, replace the reverse change holder with a new one.
- If the width is within the standard, replace the reverse idler gear with a new one.

Removal

1. Remove the reverse change holder.

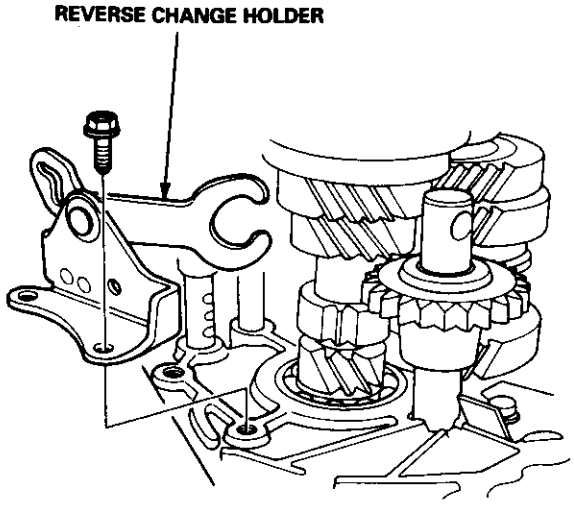

2. Remove the reverse idler gear, the reverse idler gear shaft, and the washer (B18C1 engine).

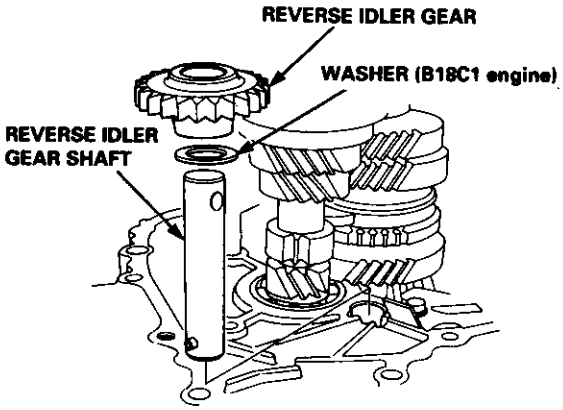

Clearance Inspection

1. Measure the clearance between the shift piece and the shift arm holder.

   Standard: 0.1 – 0.3 mm (0.004 – 0.012 in)
   Service Limit: 0.6 mm (0.02 in)

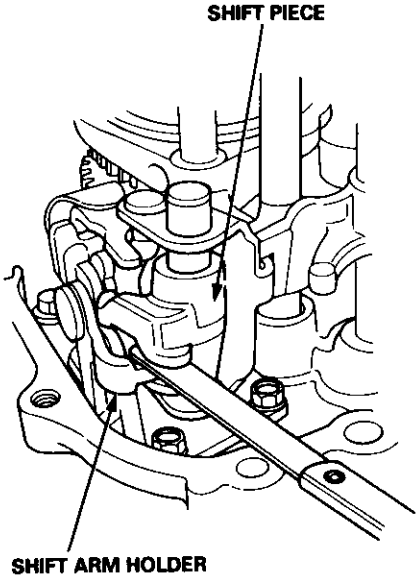

2. If the clearance is more than the service limit, measure the width of the groove in the shift piece.

   Standard: 8.1 – 8.2 mm (0.319 – 0.323 in)

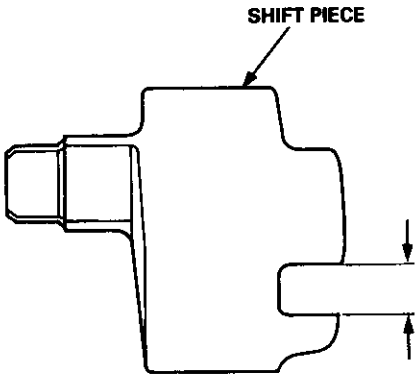

- If the width of the groove is not within the standard, replace the shift piece with a new one.
- If the width of the groove is within the standard, replace the shift arm holder with a new one.

3. Measure the clearance between the select arm and the interlock.

   Standard: 0.05 – 0.25 (0.002 – 0.010 in)
   Service Limit: 0.5 mm (0.02 in)

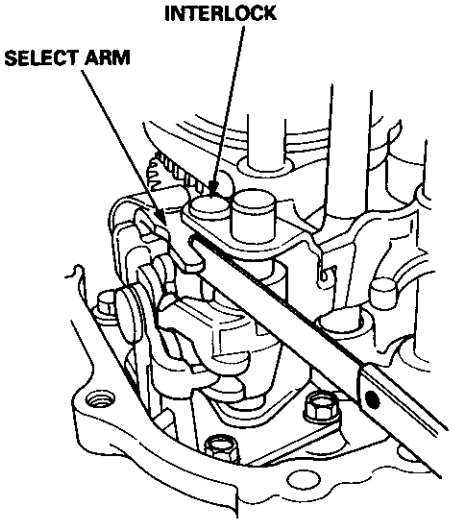

4. If the clearance is more than the service limit, measure the width of the interlock.

   Standard: 9.9 – 10.0 mm (0.390 – 0.394 in)

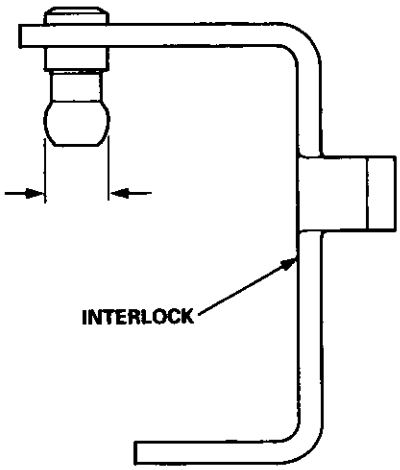

- If the width is not within the standard, replace the interlock with a new one.
- If the width is within the standard, replace the select arm with a new one.

(cont'd)

Clearance Inspection (cont'd)

7. Measure the clearance between the select arm and the 10 mm shim.

   Standard: 0.01 – 0.2 mm (0.0004 – 0.008 in)

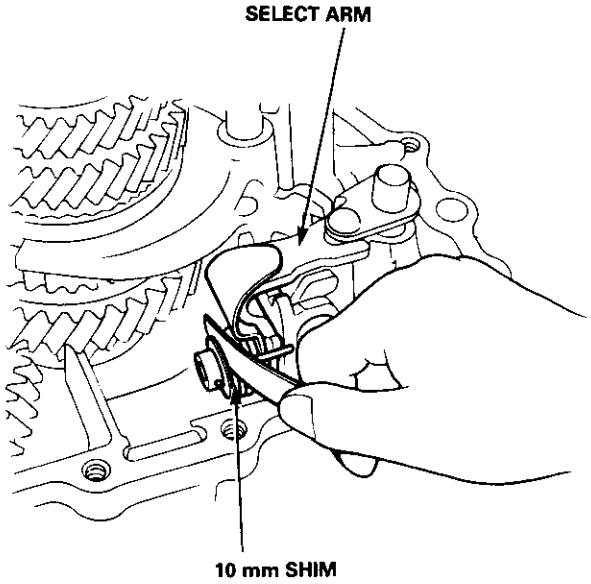

8. If the clearance is not within the standard, select and install the appropriate 10 mm shim for the correct clearance from the chart below.

10 mm Shim

	Part Number	Thickness
A	24435 – 689 – 000	0.8 mm (0.031 in)
B	24436 – 689 – 000	1.0 mm (0.039 in)
C	24437 – 689 – 000	1.2 mm (0.047 in)
D	24438 – 689 – 000	1.4 mm (0.055 in)
E	24439 – 689 – 000	1.6 mm (0.063 in)

9. Measure the clearance between the shift arm holder and the change piece.

   Standard: 0.05 – 0.35 (0.002 – 0.014 in)
   Service Limit: 0.8 mm (0.03 in)

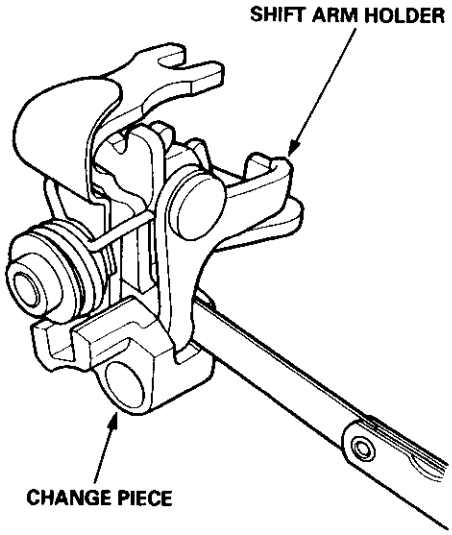

10. If the clearance is more than the service limit, measure the groove of the change piece.

    Standard: 12.05 – 12.15 mm (0.4744 – 0.4783 in)

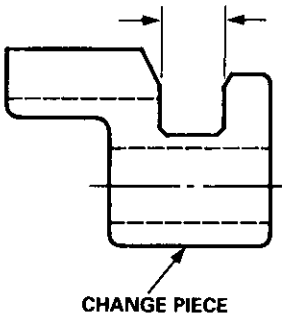

- If the groove is not within the standard, replace the change piece with a new one.
- If the groove is within the standard, replace the shift arm holder with a new one.

11. Measure the clearance between the select arm and the change piece.

Standard: 0.05 – 0.35 mm (0.002 – 0.014 in)
Service Limit: 0.5 mm (0.02 in)

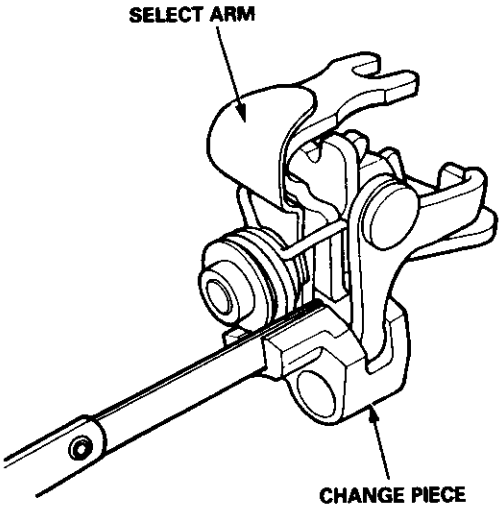

12. If the clearance is more than the service limit, measure the width of the change piece.

Standard: 12.05 – 12.15 mm (0.4744 – 0.4783 in)

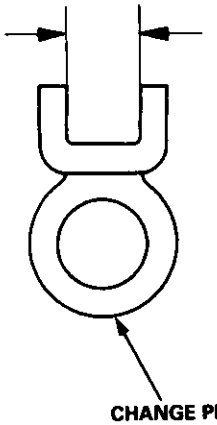

- If the width is not within the standard, replace the change piece with a new one.
- If the width is within the standard, replace the select arm with a new one.

Removal

1. Remove the shift piece shaft, then remove the shift piece and the interlock.

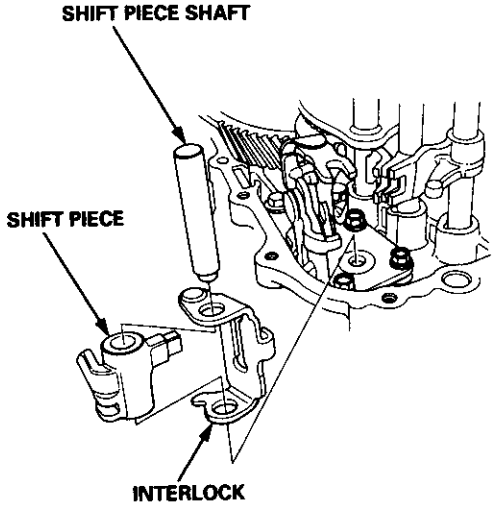

2. Remove the change holder assembly.

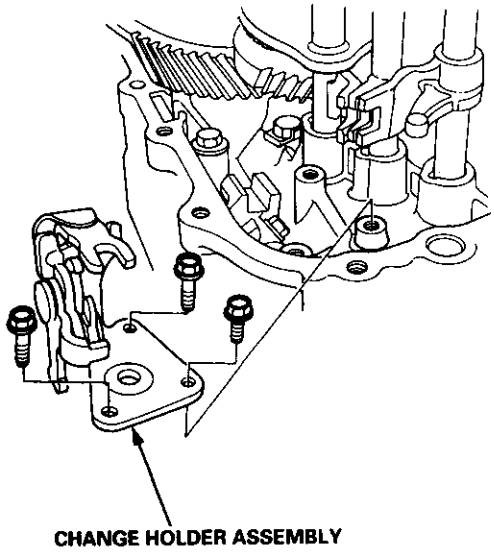

Change Holder Assembly

Disassembly/Reassembly

Prior to reassembling, clean all the parts in solvent, dry them and apply lubricant to any contact surfaces.

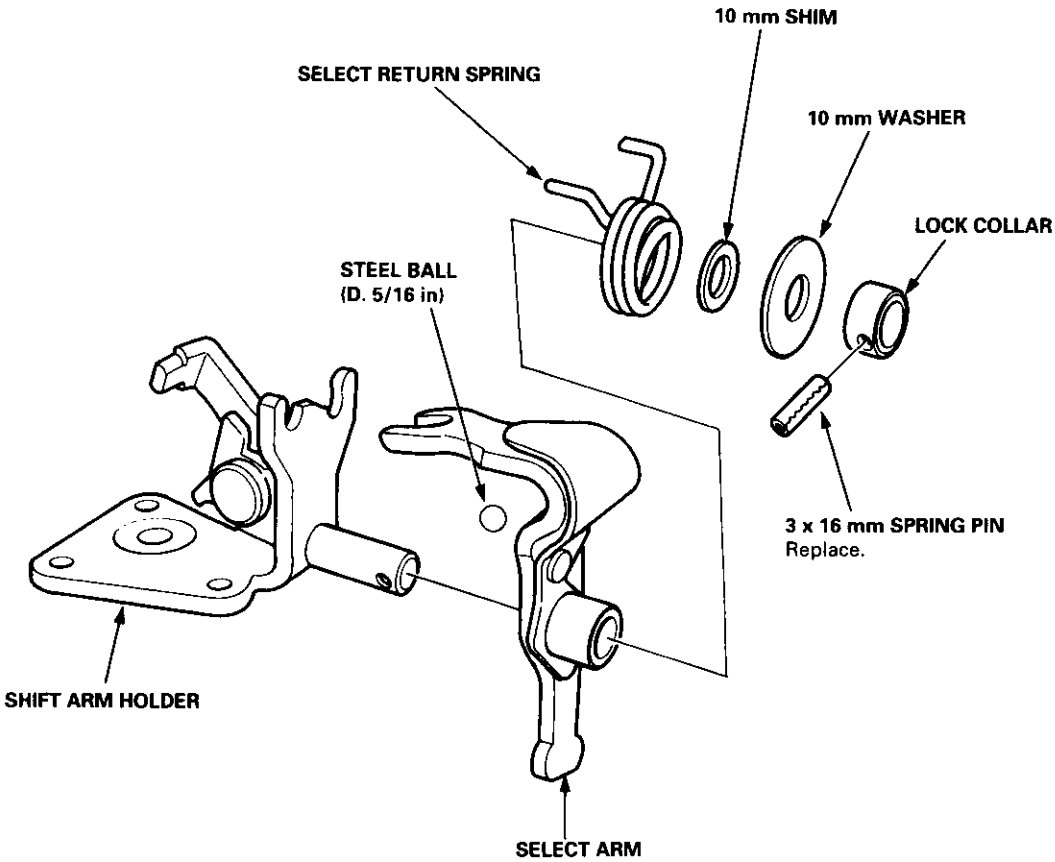

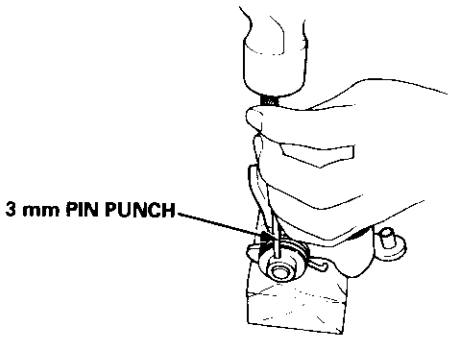

– Removal

1. Remove the mainshaft and the countershaft assemblies with the shift forks from the clutch housing.

   NOTE: Tape the mainshaft spline before removing the mainshaft and the countershaft assemblies.

2. Remove the spring washer and the washer.

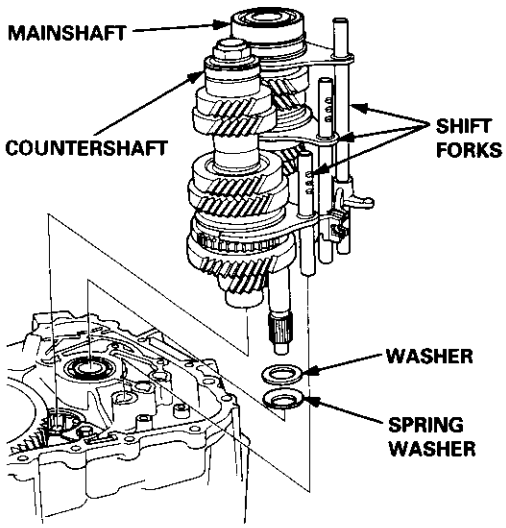

3. Remove the differential assembly from the clutch housing.

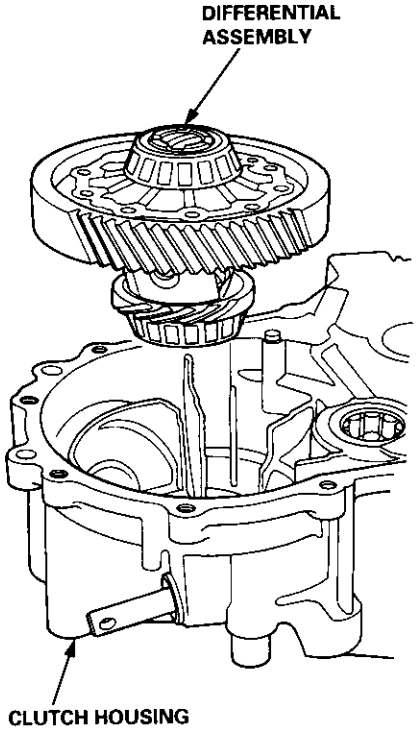

4. Remove the chamber plate.

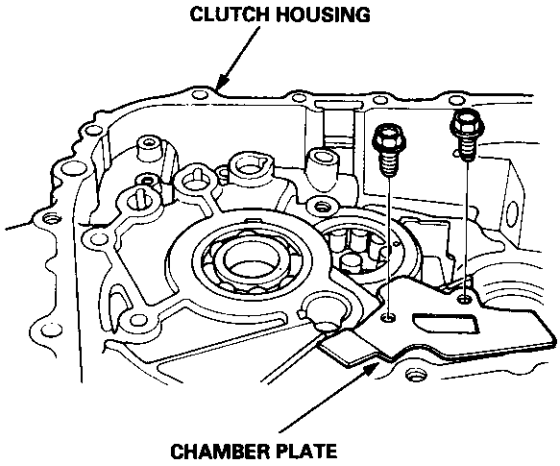

Shift Rod

Removal

1. Remove the shift rod boots.
2. Remove the change piece attaching bolt and the spring washer.
3. Remove the set screw, then remove the spring and the steel ball.
4. Remove the shift rod, then remove the change piece.
5. Remove the oil seal.

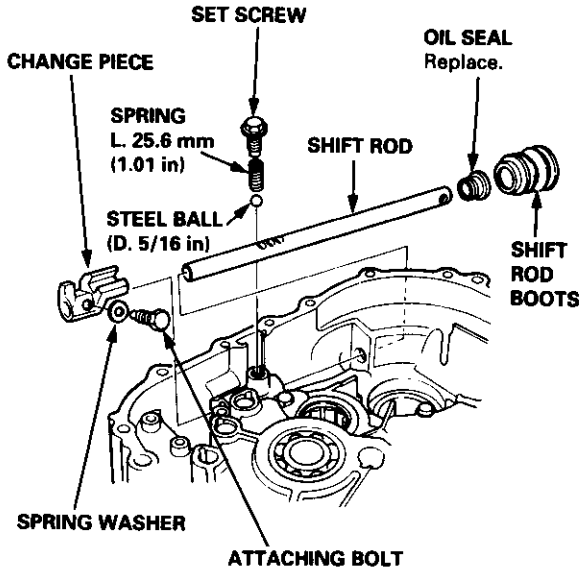

Shift Fork Assembly

Index

Prior to reassembling, clean all the parts in solvent, dry them and apply lubricant to any contact parts

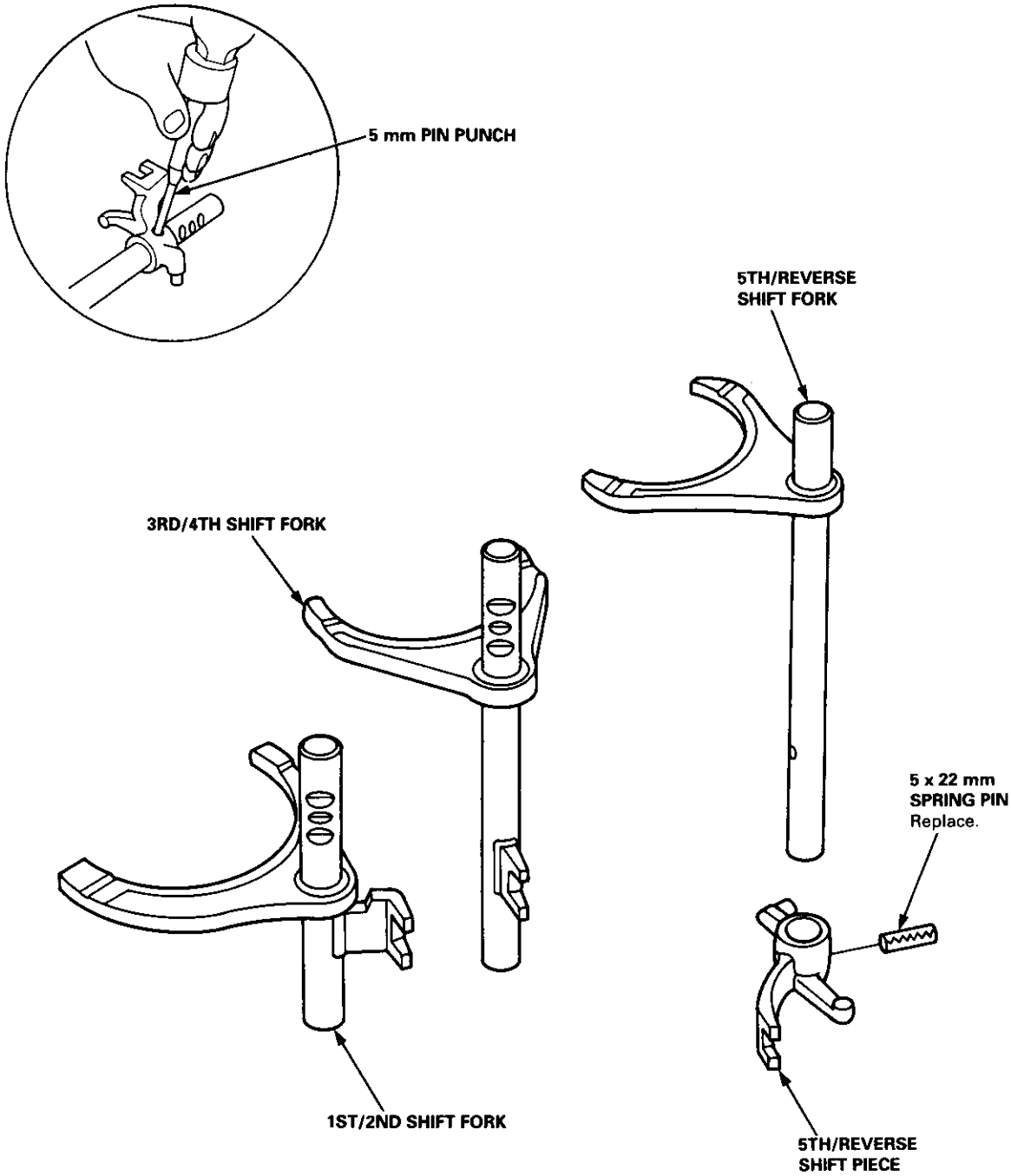

Shift Fork Assembly

Clearance Inspection

NOTE: The synchro sleeve and the synchro hub should be replaced as a set.

1. Measure the clearance between each shift fork and its matching synchro sleeve.

   Standard: 0.35 – 0.65 mm (0.014 – 0.026 in)
   Service Limit: 1.0 mm (0.04 in)

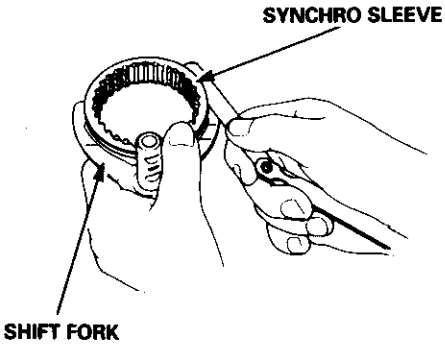

2. If the clearance is more than the service limit, measure the thickness of the shift fork fingers.

   Standard: 7.4 – 7.6 mm (0.291 – 0.299 in)

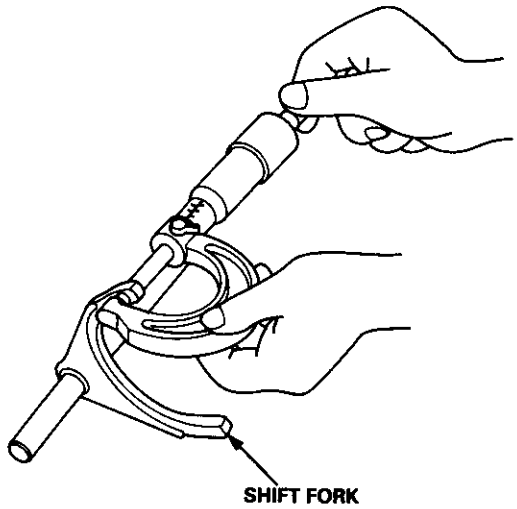

- If the thickness of the shift fork fingers is not within the standard, replace the shift fork with a new one.
- If the thickness of the shift fork fingers is within the standard, replace the synchro sleeve with a new one.

3. Measure the clearance between the shift piece and the shift fork shafts.

   Standard: 0.2 – 0.5 mm (0.008 – 0.02 in)
   Service Limit: 0.8 mm (0.03 in)

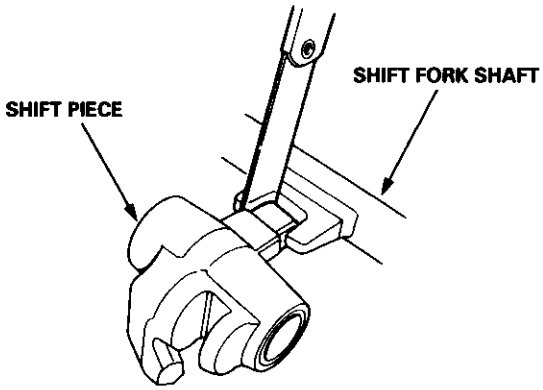

4. If the clearance is more than the service limit, measure the width of the shift piece.

   Standard: 11.9 – 12.0 mm (0.469 – 0.472 in)

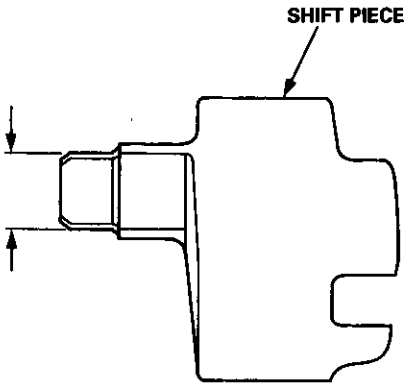

- If the width of the shift piece is not within the standard, replace the shift piece with a new one.
- If the width of the shift piece is within the standard, replace the shift fork with a new one.

Mainshaft Assembly

Index

NOTE: The 3rd/4th and the 5th synchro hubs are installed with a press.

Prior to reassembling, clean all the parts in solvent, dry them and apply lubricant to any contact surfaces. The 3rd/4th and the 5th synchro hubs, however, should be installed with a press before lubricating them.

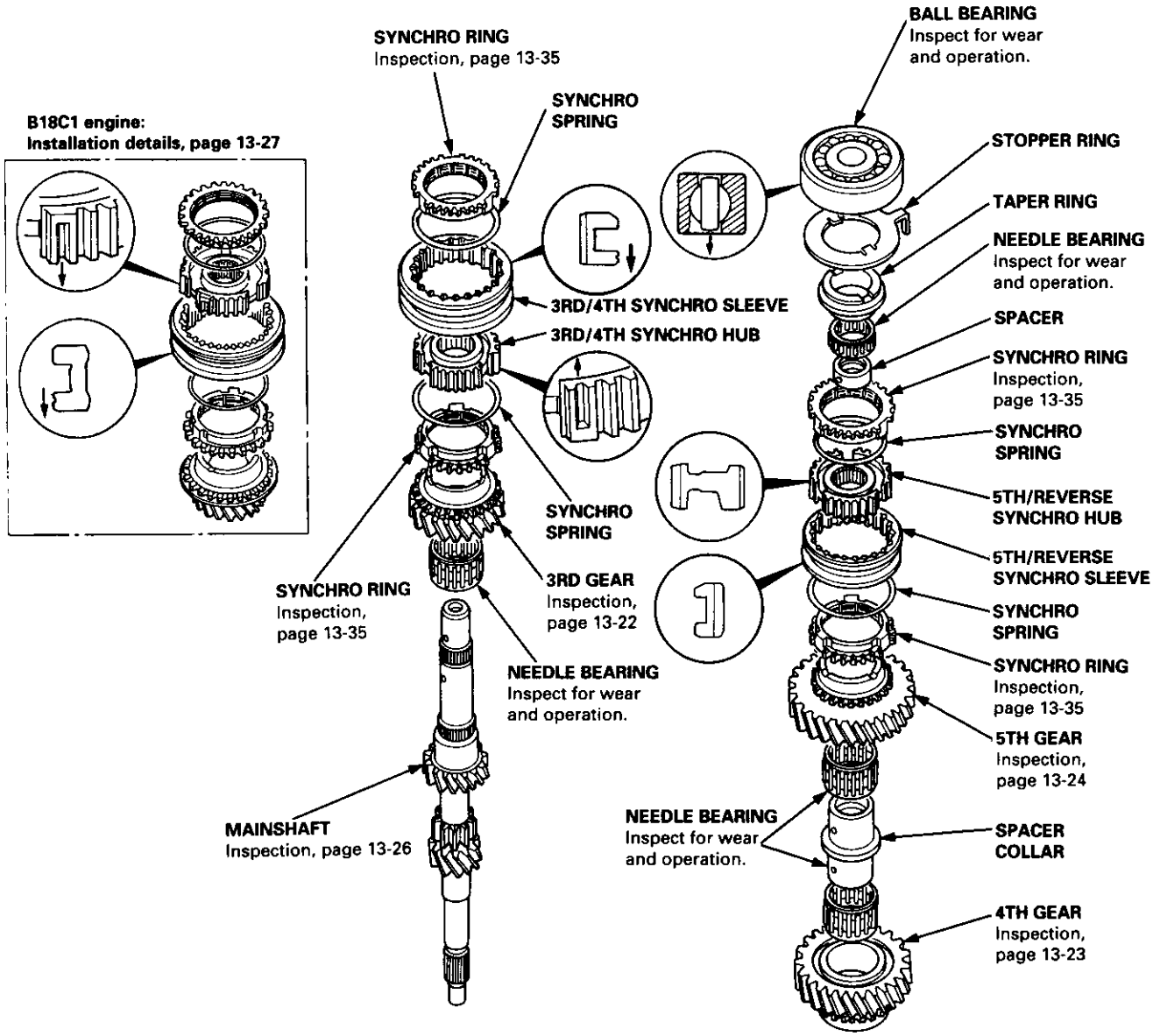

Mainshaft Assembly

Clearance Inspection

NOTE: If replacement is required, always replace the synchro sleeve and the synchro hub as a set.

1. Measure the clearance between 2nd and 3rd gears.

   Standard: 0.06 – 0.21 mm (0.002 – 0.008 in)
   Service Limit: 0.3 mm (0.01 in)

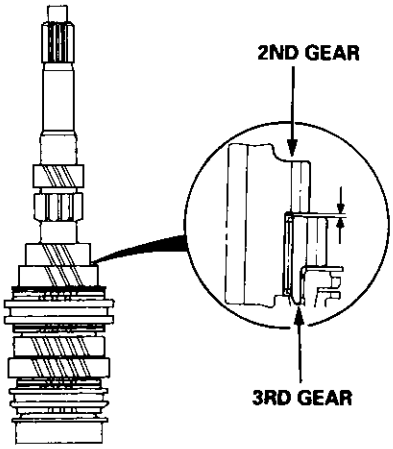

2. If the clearance is more than the service limit, measure the thickness of 3rd gear.

Engine Type	B18C1	B18B1
Standard	34.92 – 34.97 mm (1.375 – 1.377 in)	34.42 – 34.47 mm (1.355 – 1.357 in)
Service Limit	34.8 mm (1.370 in)	34.3 mm (1.350 in)

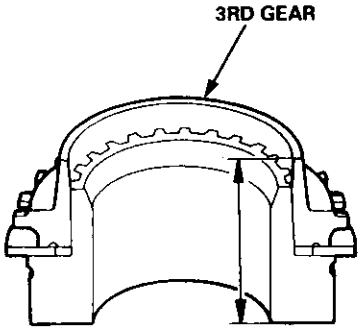

- If the thickness of 3rd gear is less than the service limit, replace 3rd gear with a new one.
- If the thickness of 3rd gear is within the service limit, replace the 3rd/4th synchro hub with a new one.

3. Measure the clearance between 4th gear and the spacer collar.

Standard: 0.06 – 0.21 mm (0.002 – 0.008 in)
Service Limit: 0.3 mm (0.01 in)

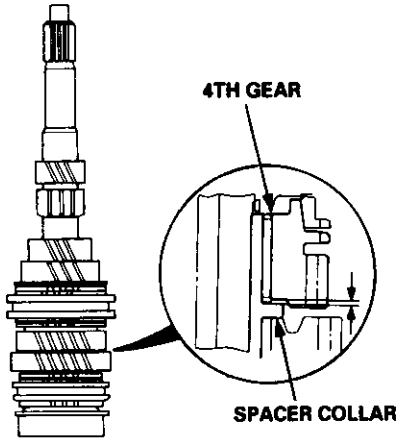

4. If the clearance is more than the service limit, measure distance Ⓐ on the spacer collar.

Standard: 26.03 – 26.08 mm (1.025 – 1.027 in)

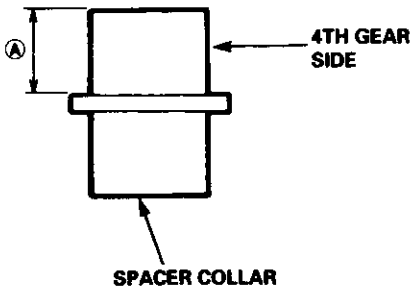

5. If distance Ⓐ is not within the standard, replace the spacer collar with a new one. If distance Ⓐ is within the standard, measure the thickness of 4th gear.

Engine Type	B18C1	B18B1
Standard	31.42 – 31.47 mm (1.237 – 1.239 in)	30.92 – 30.97 mm (1.217 – 1.219 in)
Service Limit	31.3 mm (1.232 in)	30.8 mm (1.213 in)

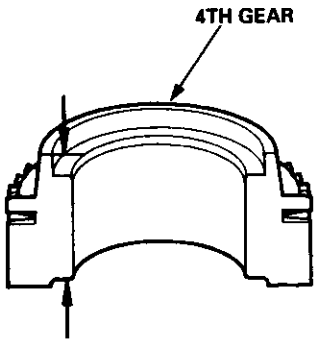

- If the thickness of 4th gear is less than the service limit, replace 4th gear with a new one.
- If the thickness of 4th gear is within the service limit, replace the 3rd/4th synchro hub with a new one.

(cont'd)

Clearance Inspection (cont'd)

6. Measure the clearance between 5th gear and the spacer collar.

   Standard: 0.06 – 0.21 mm (0.002 – 0.008 in)
   Service limit: 0.3 mm (0.012 in)

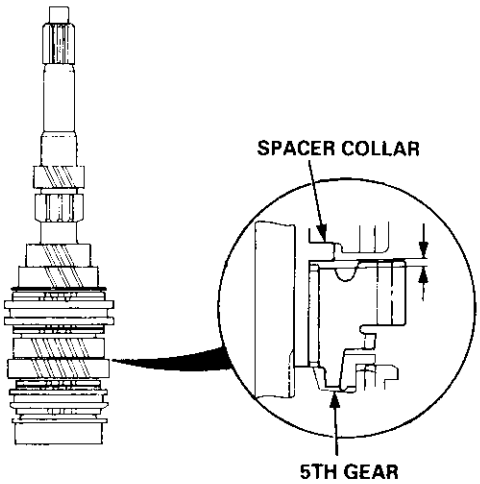

7. If the clearance is more than the service limit, measure distance Ⓑ on the spacer collar.

   Standard: 26.03 – 26.08 mm (1.025 – 1.027 in)

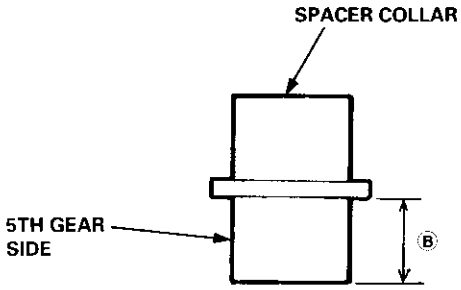

8. If distance Ⓑ is not within the standard, replace the spacer collar with a new one.
   If distance Ⓑ is within the standard, measure the thickness of 5th gear.

   Standard: 31.42 – 31.47 mm (1.237 – 1.239 in)
   Service Limit: 31.3 mm (1.232 in)

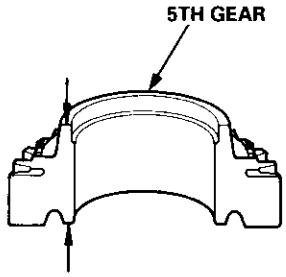

- If the thickness of 5th gear is less than the service limit, replace 5th gear with a new one.
- If the thickness of 5th gear is within the service limit, replace the 5th synchro hub with a new one.

— Disassembly

- Remove the ball bearing using a bearing puller as shown.

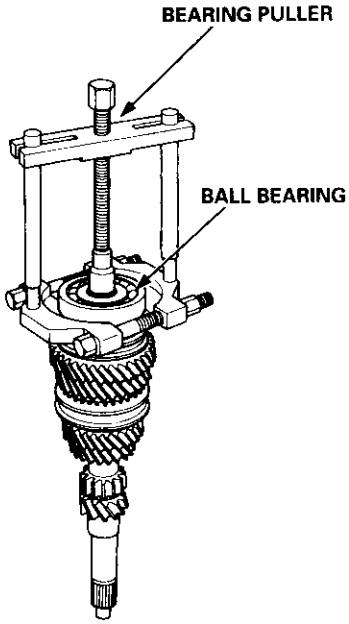

CAUTION: Remove the synchro hubs using a press and the steel blocks as shown. Use of a jaw-type puller can cause damage to the gear teeth.

2. Support 5th gear on steel blocks, and press the mainshaft out of the 5th synchro hub, as shown.

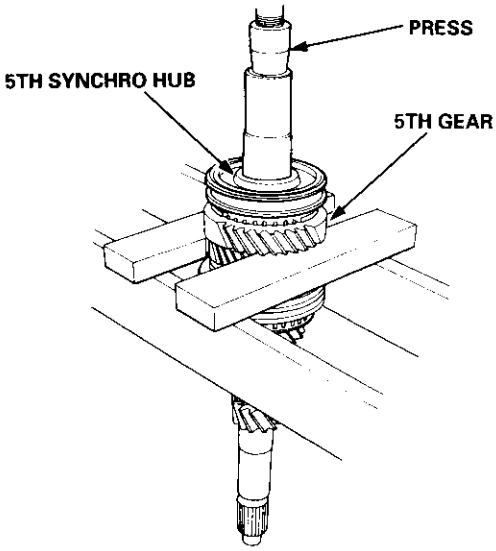

3. Support 3rd gear on steel blocks, and press the mainshaft out of the 3rd/4th synchro hub, as shown.

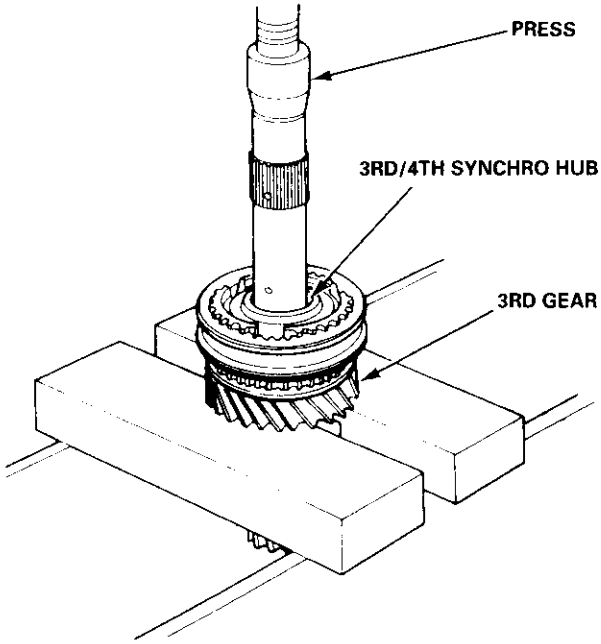

Inspection

1. Inspect the gear surfaces and the bearing surfaces for wear and damage, then measure the mainshaft at points A, B, and C.

   Standard:
   A: 27.987 – 28.000 mm (1.1018 – 1.1024 in)
   B: 37.984 – 38.000 mm (1.4954 – 1.4960 in)
   C: 27.977 – 27.990 mm (1.1015 – 1.1020 in)

   Service Limit:
   A: 27.940 mm (1.1000 in)
   B: 37.930 mm (1.4933 in)
   C: 27.930 mm (1.0996 in)

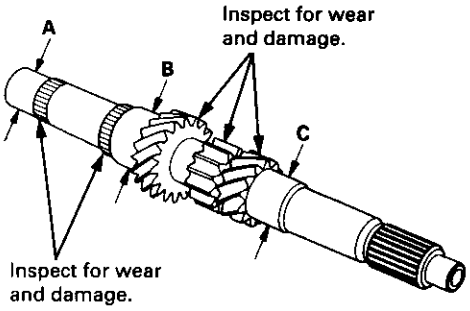

Inspect oil passages for clogging.

- If any parts of the mainshaft are less than the service limit, replace mainshaft with a new one.

2. Inspect for runout.

   Standard: 0.02 mm (0.0008 in) Max.
   Service Limit: 0.05 mm (0.002 in)

   NOTE: Support the mainshaft at both ends as shown.

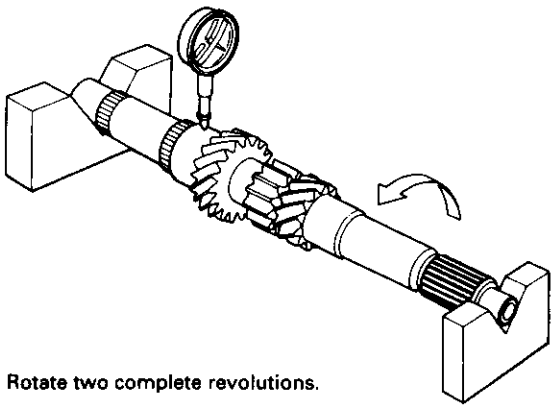

Rotate two complete revolutions.

- If the runout is more than the service limit, replace the mainshaft with a new one.

Reassembly

CAUTION:

- **Press the 3rd/4th and the 5th synchro hubs on the mainshaft without lubrication.**
- **When installing the 3rd/4th and the 5th synchro hubs, support the mainshaft on the steel blocks, and install synchro hubs using a press.**
- **Install the 3rd/4th and the 5th synchro hubs with a maximum pressure of 19.6 kN (2,000 kgf, 14,466 lbf).**

NOTE: Refer to page 13-21 for reassembly sequence.

1. Support 2nd gear on steel blocks, then install the 3rd/4th synchro hub using the special tools and a press, as shown.

   NOTE: After installing, check the operation of the 3rd/4th synchro sleeve and hub.

B18B1 engine:

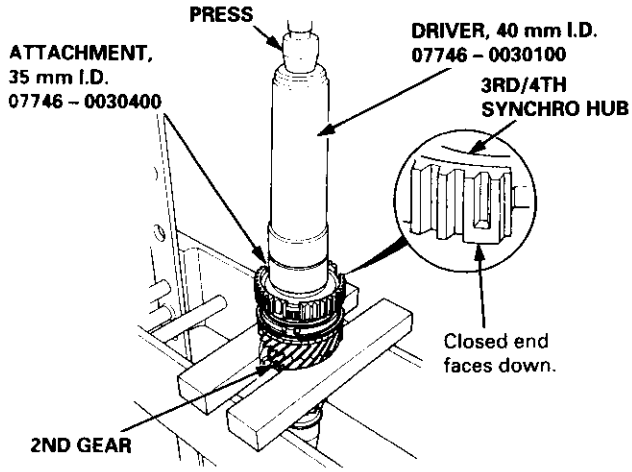

B18C1 engine: Assemble the 3rd/4th synchro hub and sleeve together before installing them on the mainshaft.

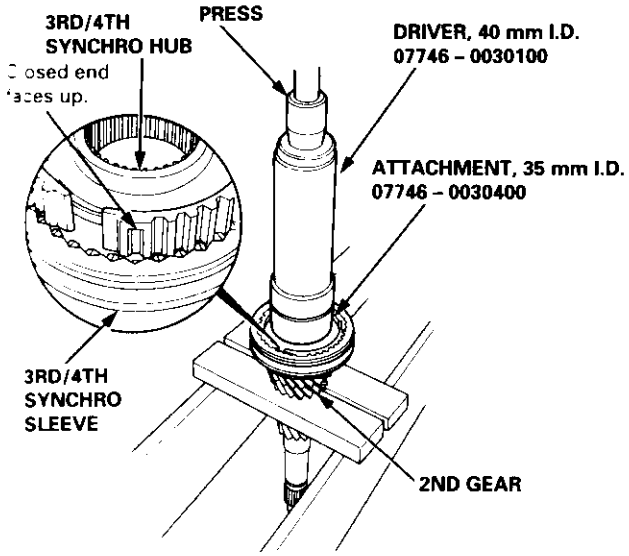

2. Install the 5th synchro hub using the special tools and a press as shown.

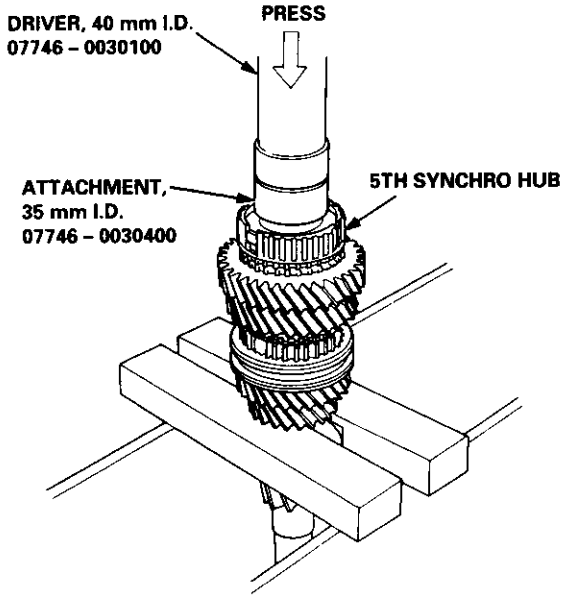

3. Install the ball bearing using the special tools and a press as shown.

   NOTE: Install the ball bearing with the tapered end facing down.

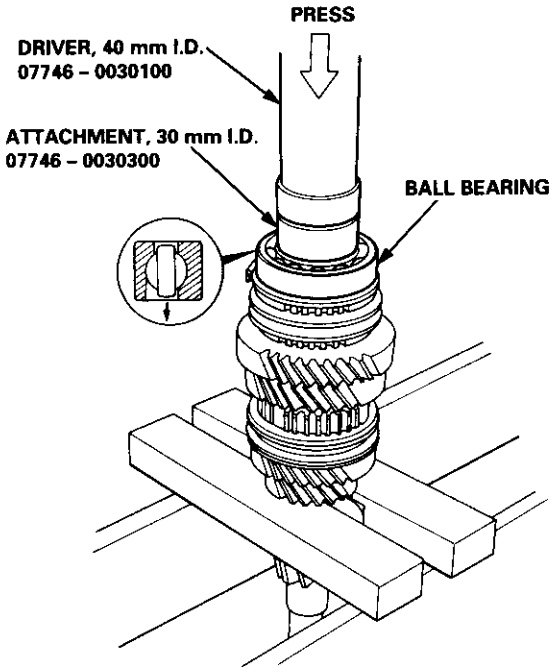

Countershaft Assembly

Index

NOTE: The 4th and 5th gears are installed with a press.

OIL Prior to reassembling, clean all the parts in solvent, dry them and apply lubricant to any contact surfaces. The 4th and 5th gears, however, should be installed with a press before lubricating them.

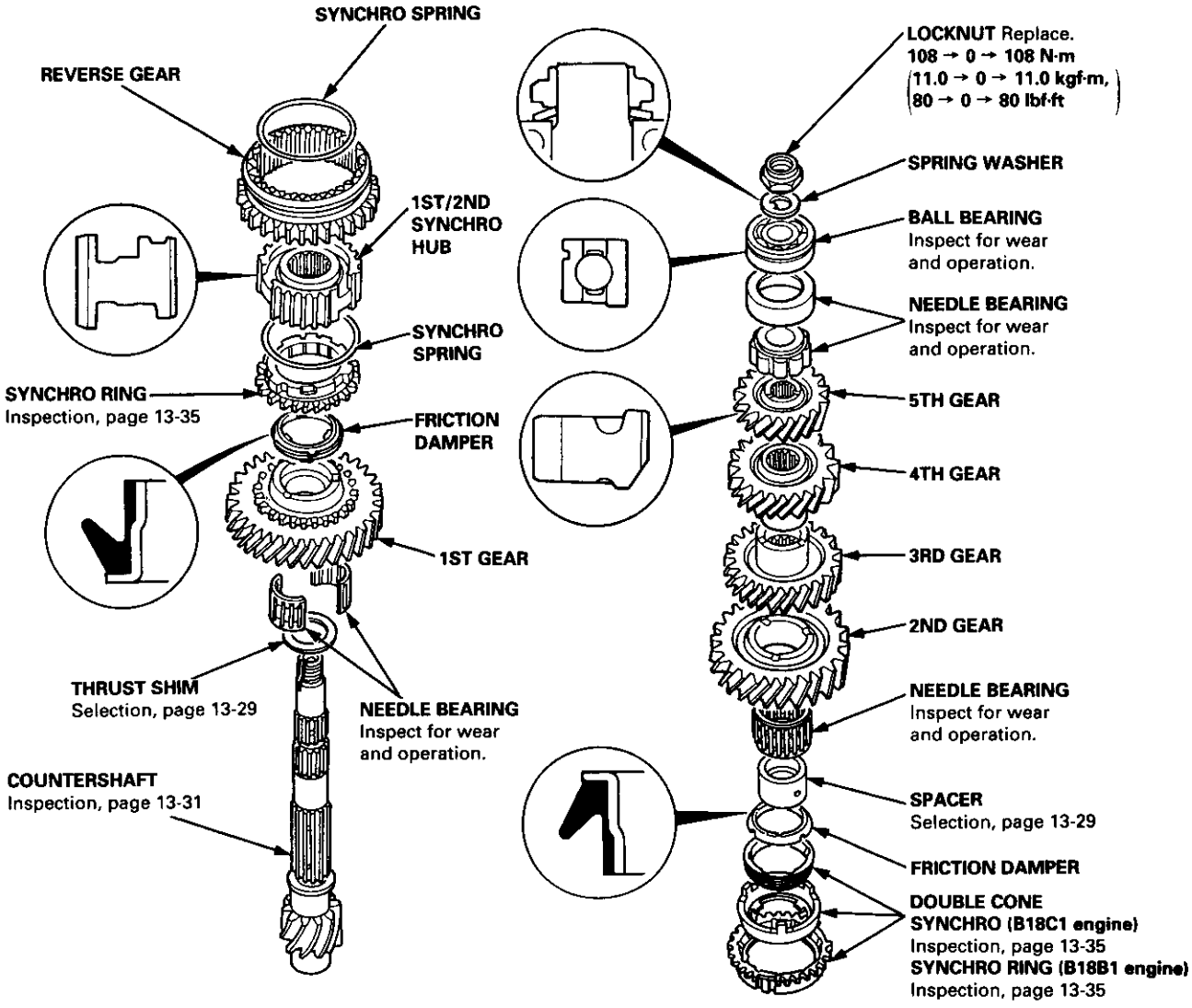

Clearance Inspection

1. Measure the clearance between the thrust shim and 1st gear.

   Standard: 0.04 – 0.12 mm (0.002 – 0.005 in)
   Service Limit: 0.18 mm (0.007 in)

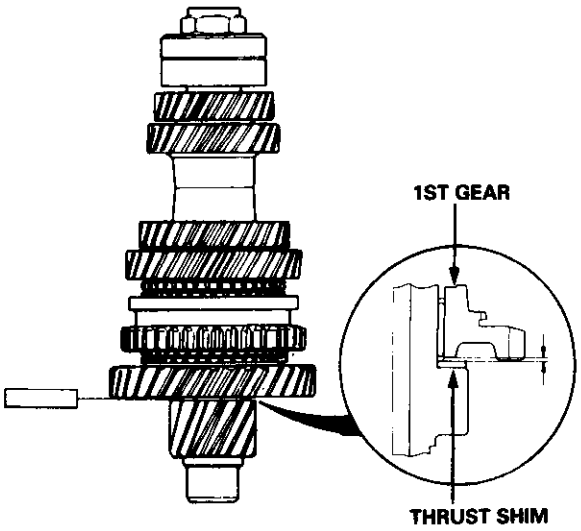

2. If the clearance is more than the service limit, select and install the appropriate thrust shim for the correct clearance from the chart below.

Thrust Shim

	Part Number	Thickness
A	23921 – PK5 – 900	1.95 mm (0.0768 in)
B	23922 – PK5 – 900	1.96 mm (0.0772 in)
C	23923 – PK5 – 900	1.97 mm (0.0776 in)
D	23924 – PK5 – 900	1.98 mm (0.0780 in)
E	23925 – PK5 – 900	1.99 mm (0.0783 in)
F	23926 – PK5 – 900	2.00 mm (0.0787 in)
G	23927 – PK5 – 900	2.01 mm (0.0791 in)
H	23928 – PK5 – 900	2.02 mm (0.0795 in)
I	23929 – PK5 – 900	2.03 mm (0.0799 in)
J	23930 – PK5 – 900	2.04 mm (0.0803 in)
K	23931 – PK5 – 900	2.05 mm (0.0807 in)
L	23932 – PK5 – 900	2.06 mm (0.0811 in)
M	23933 – PK5 – 900	2.07 mm (0.0815 in)
N	23934 – PK5 – 900	2.08 mm (0.0819 in)
O	23935 – PK5 – 900	2.09 mm (0.0823 in)
P	23936 – PK5 – 900	2.10 mm (0.0827 in)

3. Measure the clearance between 2nd and 3rd gears.

   Standard: 0.05 – 0.12 mm (0.002 – 0.005 in)
   Service Limit: 0.18 mm (0.007 in)

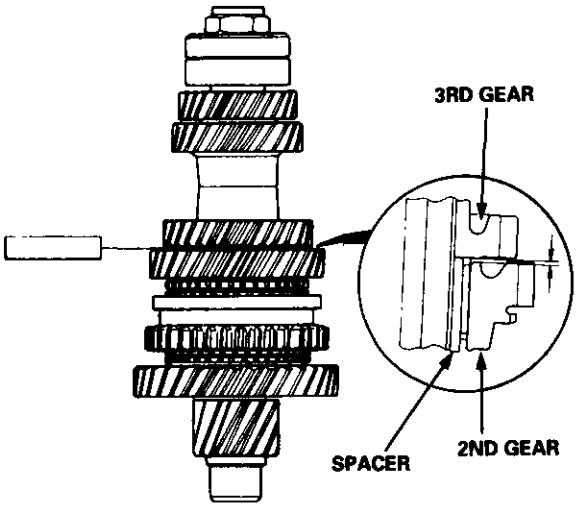

4. If the clearance is more than the service limit, select and install the appropriate spacer for the correct clearance from the chart below.

Spacer

	Part Number	Thickness
A	23917 – P21 – 010	29.02 – 29.04 mm (1.1425 – 1.1433 in)
B	23918 – P21 – 010	29.07 – 29.09 mm (1.1445 – 1.1453 in)

Countershaft Assembly

Disassembly

1. Securely clamp the countershaft assembly in a bench vise with wood blocks.

2. Raise the locknut tab from the groove in the countershaft, then remove the locknut and the spring washer.

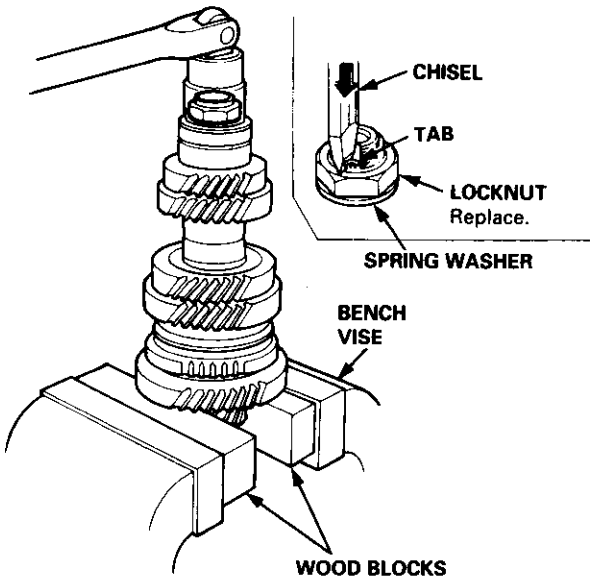

3. Remove the ball bearing using a bearing puller as shown.

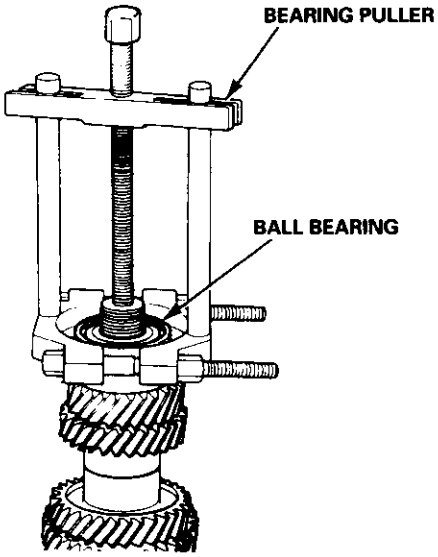

4. Remove the bearing outer race, then remove the needle bearing using a bearing puller as shown.

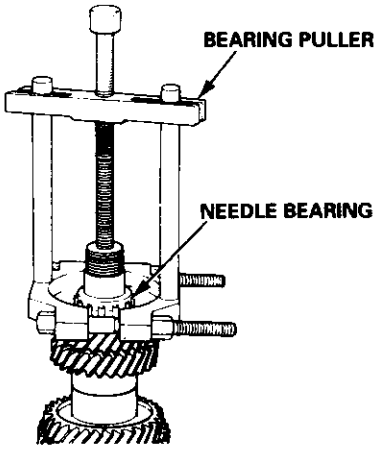

CAUTION: Remove the gears using a press and the steel blocks as shown. Use of a jaw-type puller can cause damage to the gear teeth.

5. Support 4th gear on steel blocks, and press the countershaft out of 5th and 4th gears, as shown.

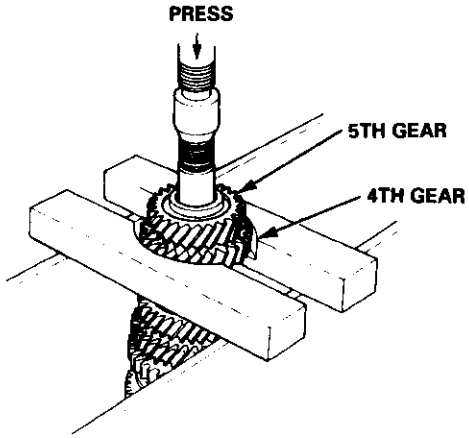

Inspection

1. Inspect the gear surfaces and the bearing surfaces for wear and damage, then measure the countershaft at points A, B, and C.

   Standard:
   A: 24.980 – 27.993 mm (0.9835 – 1.1021 in)
   B: 36.984 – 37.000 mm (1.4561 – 1.4567 in)
   C: 33.000 – 33.015 mm (1.2992 – 1.2998 in)
   Service Limit:
   A: 24.930 mm (0.9815 in)
   B: 36.930 mm (1.4539 in)
   C: 32.950 mm (1.2972 in)

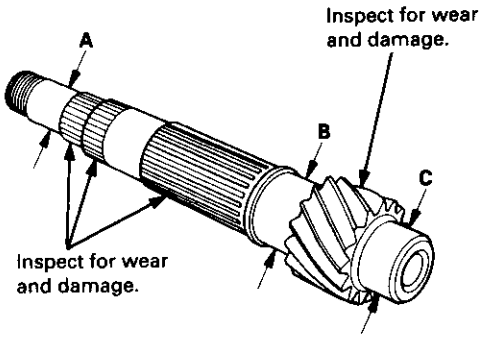

Inspect oil passage for clogging.

- If any parts of the countershaft are less than the service limit, replace countershaft with a new one.

2. Inspect for runout.

   Standard: 0.02 mm (0.0008 in) Max.
   Service Limit: 0.05 mm (0.002 in)

   NOTE: Support the countershaft at both ends as shown.

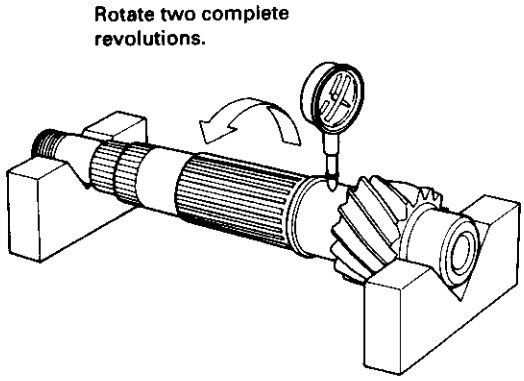

- If the runout is more than the service limit, replace the countershaft with a new one.

Countershaft Assembly

Reassembly

CAUTION:

- **Press 4th and 5th gears on the countershaft without lubrication.**
- **When installing 4th and 5th gears, support the shaft on steel blocks, and install the gears using a press.**
- **Install 4th and 5th gear with a maximum pressure of 25.5 kN (2,600 kgf, 18,806 lbf).**

NOTE: Refer to page 13-28 for reassembly sequence.

1. Install the thrust shim and the needle bearings on the countershaft.

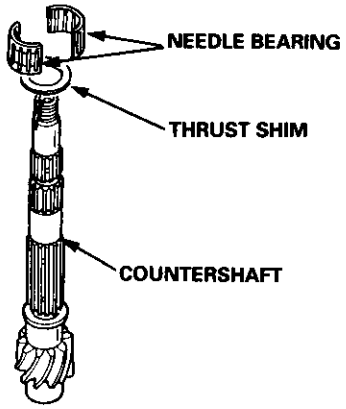

2. Install the friction damper, the synchro ring, and the synchro spring on 1st gear.

3. Install the 1st/2nd synchro hub by aligning the fingers on the friction damper and the grooves in the 1st/2nd synchro hub, as shown.

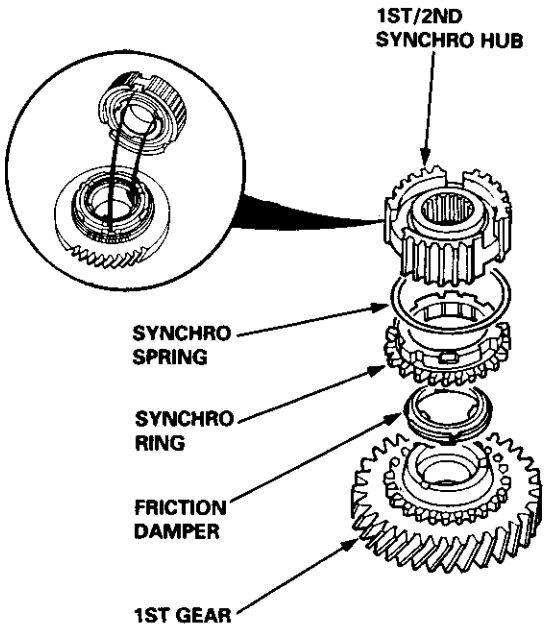

4. Install the reverse gear.

5. Install the synchro spring, and the double cone synchro (B18C1 engine), or synchro ring (B18B1 engine), as shown.

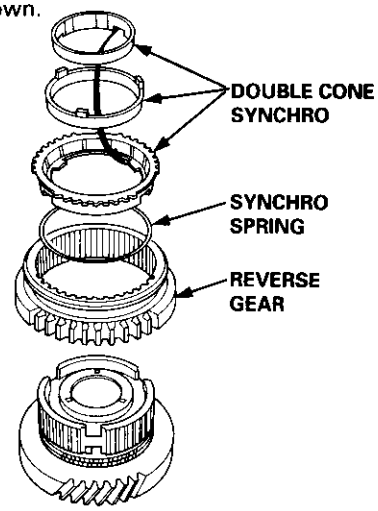

6. Assemble the friction damper, the needle bearing, and 2nd gear, then install them by aligning the fingers on the friction damper and the grooves in the 1st/2nd synchro hub with the fingers of the double cone synchro and the grooves on 2nd gear, as shown.

7. Install the spacer.

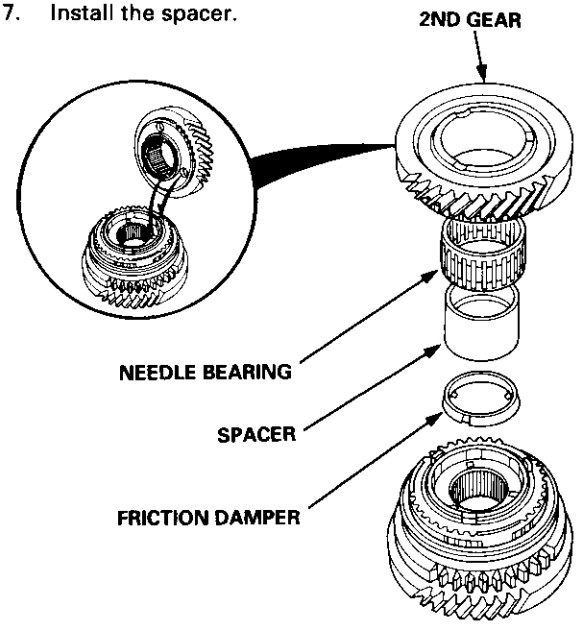

8. Install the parts assembled in steps 2 – 6 on the countershaft.

9. Support the countershaft on a steel block, and install 4th gear using the special tools and a press, as shown.

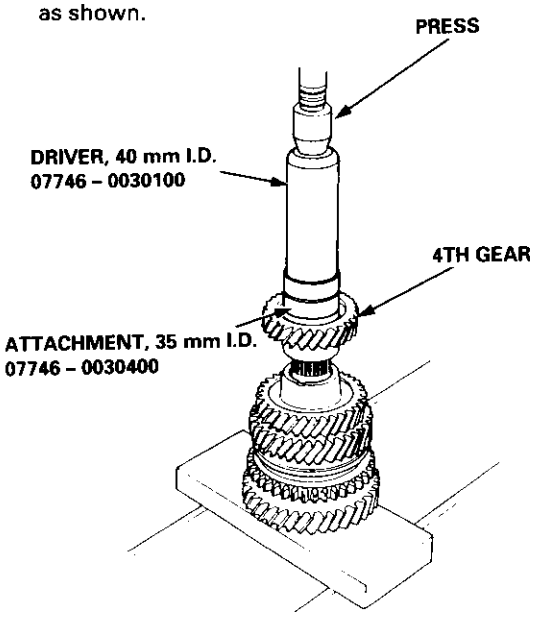

10. Support the countershaft on a steel block, and install 5th gear using the special tools and a press, as shown.

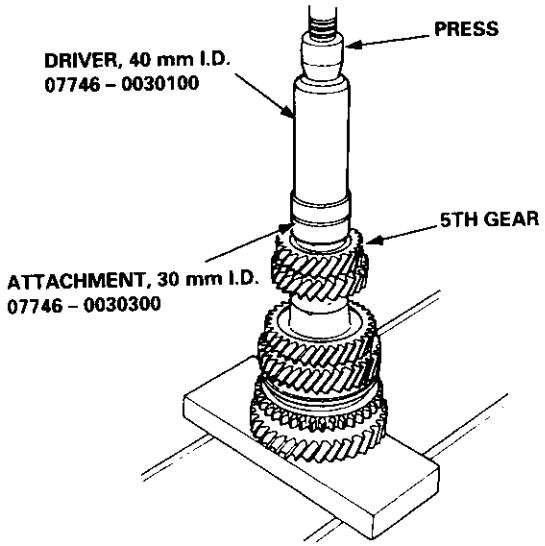

11. Install the needle bearing, then install the ball bearing using the special tools and a press as shown.

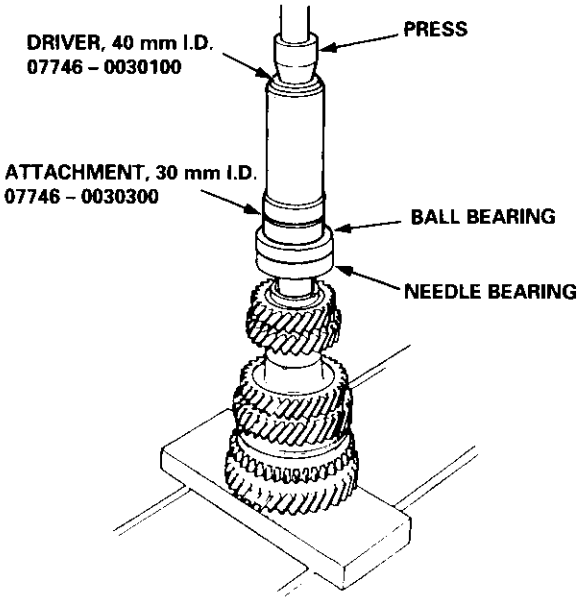

12. Securely clamp the countershaft assembly in a bench vise with wood blocks.

13. Install the spring washer, tighten the locknut, then stake the locknut tab into the groove.

LOCKNUT
108 → 0 → 108 N·m (11.0 → 0 → 11.0 kgf·m, 80 → 0 → 80 lbf·ft)

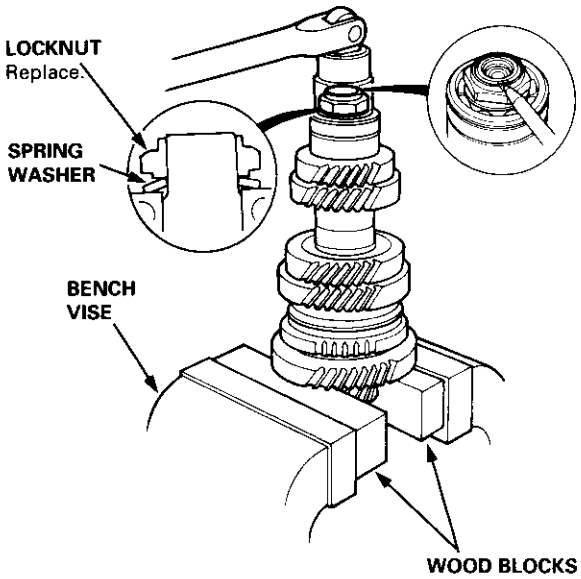

Synchro Sleeve, Synchro Hub

Inspection

1. Inspect gear teeth on all synchro hubs and synchro sleeves for rounded off corners, which indicates wear.

2. Install each synchro hub in its mating synchro sleeve and check for freedom of movement.

   NOTE: If replacement is required, always replace the synchro sleeve and synchro hub as a set.

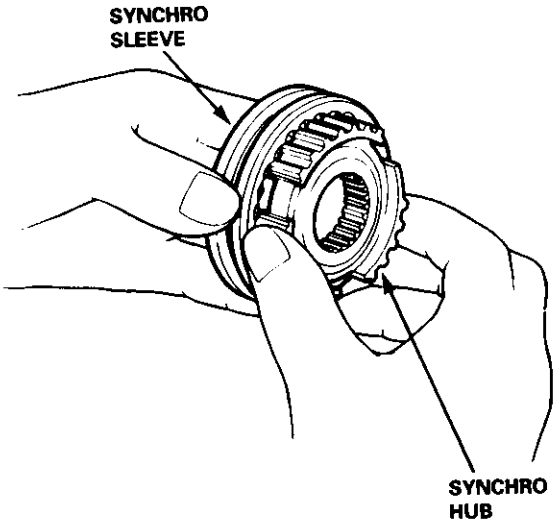

Installation

When assembling the synchro sleeve and synchro hub, be sure to match the three sets of longer teeth (120 degrees apart) on the synchro sleeve with the three sets of deeper grooves in the synchro hub.

CAUTION: Do not install the synchro sleeve with its longer teeth in the 1st/2nd synchro hub slots, because it will damage the spring ring.

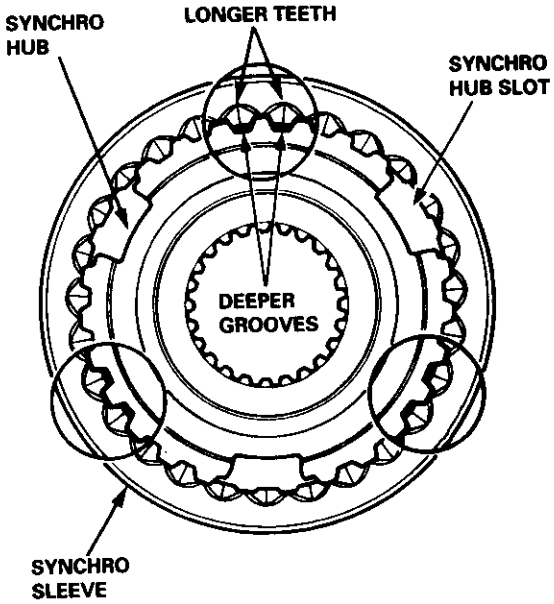

Synchro Ring, Gear

Inspection

1. Inspect the synchro ring and gear.

   A: Inspect the inside of the synchro ring for wear.

   B: Inspect the synchro sleeve teeth and matching teeth on the synchro ring for wear (rounded off).

   C: Inspect the synchro sleeve teeth and matching teeth on the gear for wear (rounded off).

   D: Inspect the gear hub thrust surface for wear.

   E: Inspect the cone surface for wear and roughness.

   F: Inspect the teeth on all gears for uneven wear, scoring, galling, and cracks.

2. Coat the cone surface of the gear with oil, and place the synchro ring on the matching gear. Rotate the ring, making sure that it does not slip.

   Measure the clearance between the synchro ring and gear all the way around.

   NOTE: Hold the synchro ring against the gear evenly while measuring the clearance.

   Synchro Ring-to-Gear Clearance
   Standard: 0.85 – 1.10 mm (0.033 – 0.043 in)
   Service Limit: 0.4 mm (0.02 in)

   Double Cone Synchro-to-Gear Clearance
   Standard:
   Ⓐ: (Outer Synchro Ring to Synchro Cone) 0.5 – 1.0 mm (0.02 – 0.04 in)
   Ⓑ: (Synchro Cone to Gear) 0.5 – 1.0 mm (0.02 – 0.04 in)
   Ⓒ: (Outer Synchro Ring to Gear) 0.95 – 1.68 mm (0.037 – 0.066 in)
   Service Limit:
   Ⓐ: 0.3 mm (0.01 in)
   Ⓑ: 0.3 mm (0.01 in)
   Ⓒ: 0.6 mm (0.02 in)

   If the clearance is less than the service limit, replace the synchro ring and synchro cone.

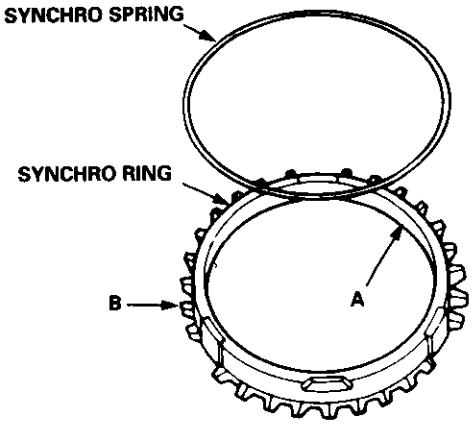

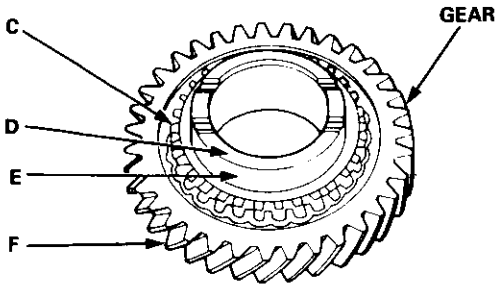

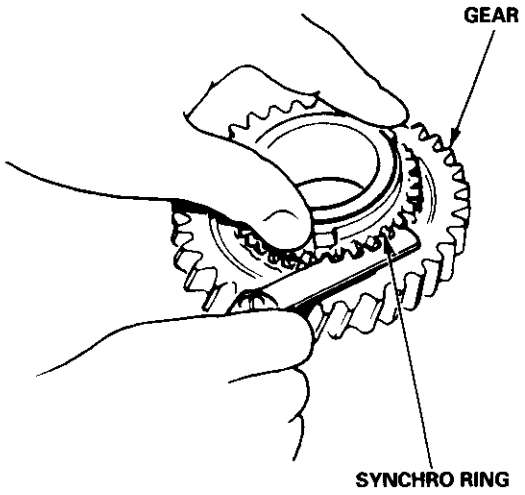

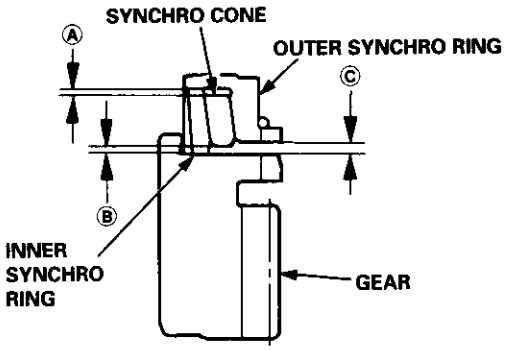

Clutch Housing Bearing

Replacement

Mainshaft:

1. Remove the ball bearing using the special tools as shown.

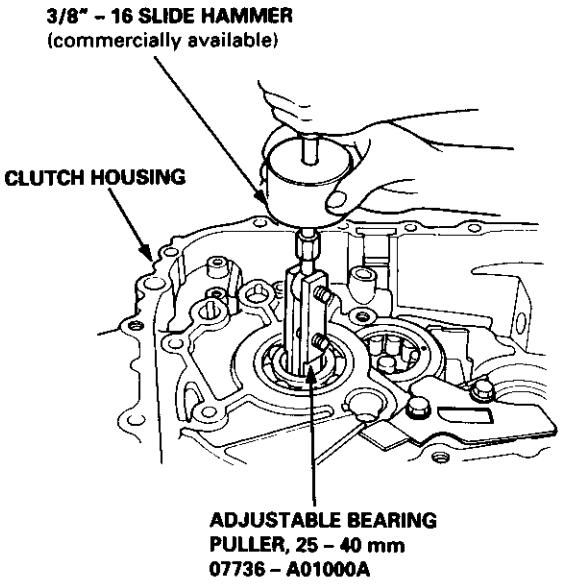

2. Remove the oil seal from the clutch housing.

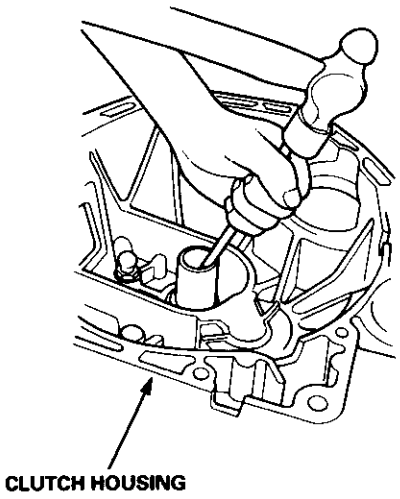

3. Drive the new oil seal into the clutch housing using the special tools as shown.

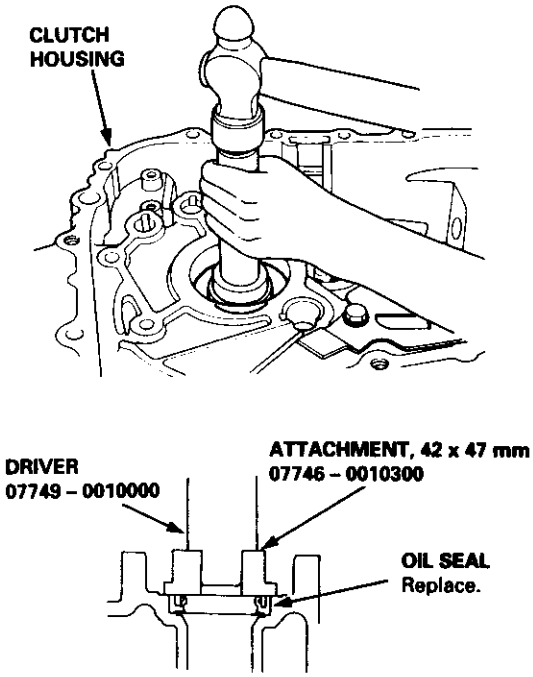

4. Drive the ball bearing into the clutch housing using the special tools as shown.

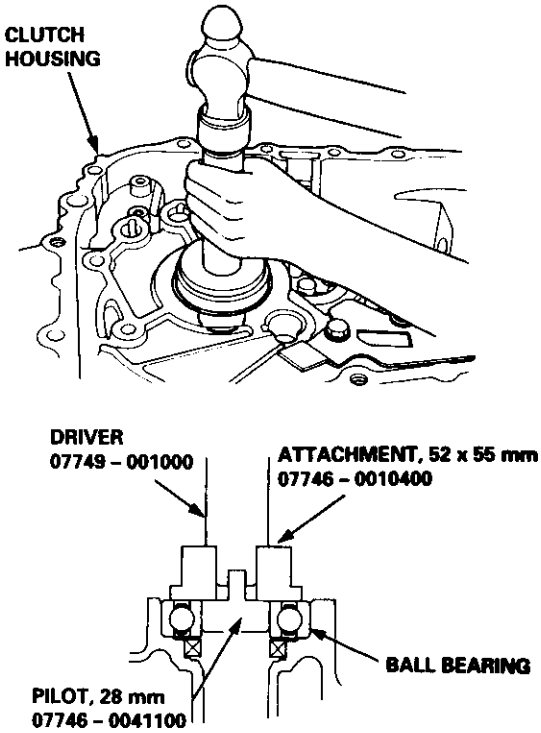

Countershaft:

1. Bend the tab on the lock washer down, then remove the bolt and bearing retainer plate.

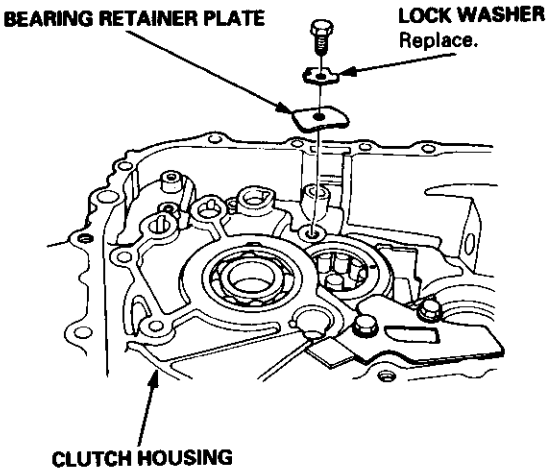

2. Remove the needle bearing using the special tools as shown, then remove the oil guide plate.

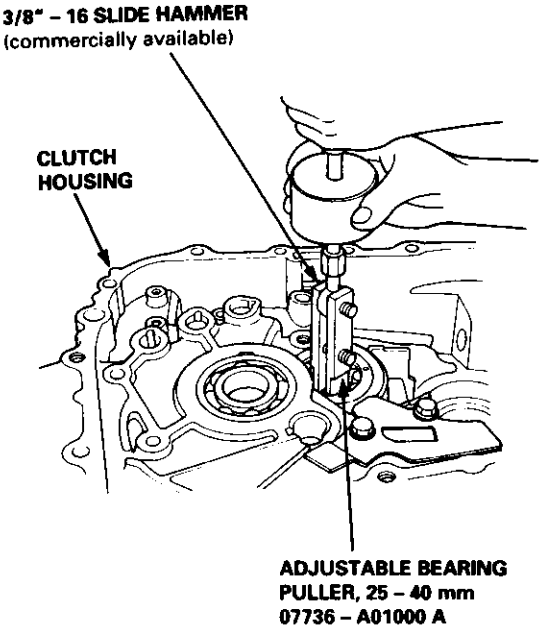

3. Position the oil guide plate and new needle bearing in the bore of the clutch housing, then drive in the needle bearing using the special tools as shown.

   NOTE: Position the needle bearing with the oil hole facing up.

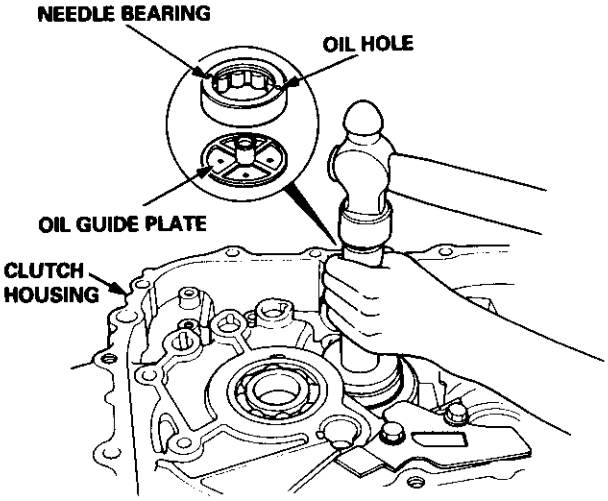

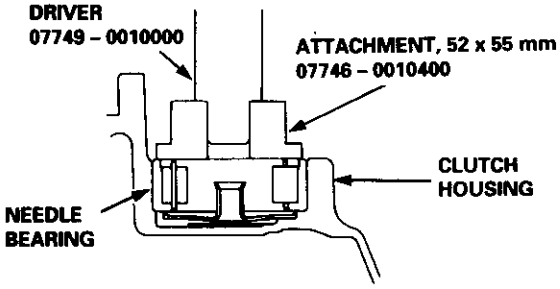

4. Install the bearing retainer plate and new lock washer, then bend the tab against the bolt head.

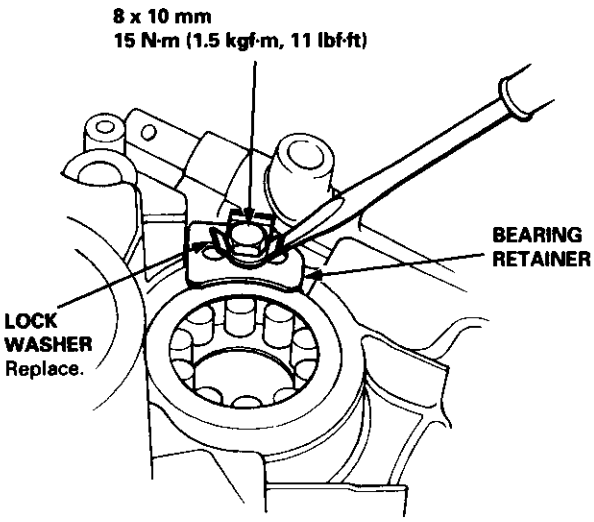

Mainshaft Thrust Clearance

Adjustment

1. Remove the 72 mm thrust shim and oil guide plate from the transmission housing.

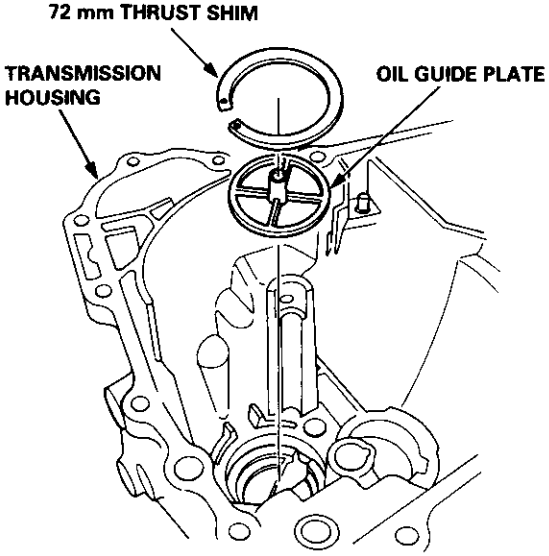

2. Install the 3rd/4th synchro hub, spacer collar, 5th synchro hub, spacer, and ball bearing on the mainshaft, then install the above assembly in the transmission housing.

3. Install the washer on the mainshaft.

4. Measure distance Ⓑ between the end of the transmission housing and washer.

   NOTE:
   - Use a straight edge and vernier caliper.
   - Measure at three locations and average the reading.

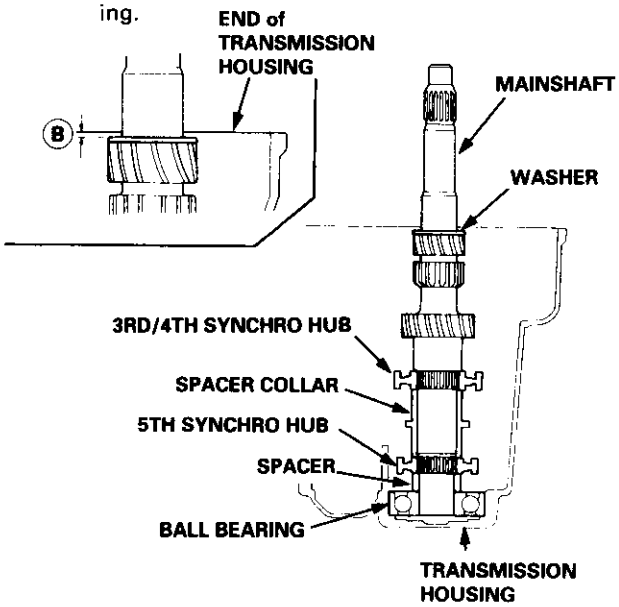

5. Measure distance Ⓒ between the end of the clutch housing and bearing inner race.

   NOTE:
   - Use a straight edge and depth gauge.
   - Measure at three locations and average the readings.

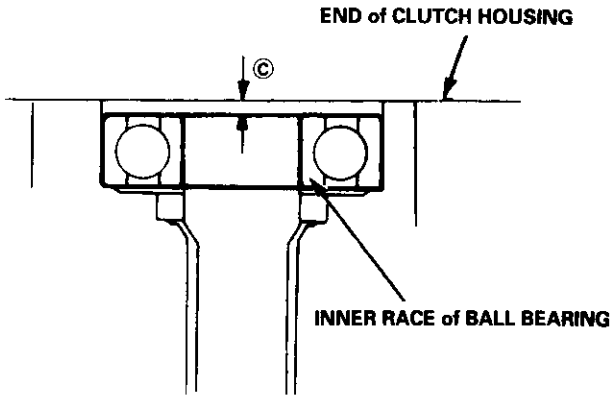

6. Select the proper 72 mm thrust shim from the chart by using the formula below.

   NOTE: Use only one 72 mm thrust shim.

   Shim Selection Formula:

   From the measurements you made in steps 4 and 5:
   -1. Add distance Ⓒ (step 5) to distance Ⓑ (step 4).

   -2. From this number, subtract 0.93 (which is the midpoint of the flex range of the clutch housing bearing spring washer).

   -3. Take this number and compare it to the available shim sizes in the chart.

   (For example)

B: 2.39	2.61
+ C: 0.22	− 0.93
= 2.61	= 1.68

   - Try the 1.68 mm (0.0661 in) shim.

72 mm Thrust Shim

	Part Number	Thickness
A	23931 – P21 – 000	0.60 mm (0.0236 in)
B	23932 – P21 – 000	0.63 mm (0.0248 in)
C	23933 – P21 – 000	0.66 mm (0.0260 in)
D	23934 – P21 – 000	0.69 mm (0.0272 in)
E	23935 – P21 – 000	0.72 mm (0.0283 in)
F	23936 – P21 – 000	0.75 mm (0.0295 in)
G	23937 – P21 – 000	0.78 mm (0.0307 in)
H	23938 – P21 – 000	0.81 mm (0.0319 in)
I	23939 – P21 – 000	0.84 mm (0.0331 in)
J	23940 – P21 – 000	0.87 mm (0.0343 in)
K	23941 – P21 – 000	0.90 mm (0.0354 in)
L	23942 – P21 – 000	0.93 mm (0.0366 in)
M	23943 – P21 – 000	0.96 mm (0.0378 in)
N	23944 – P21 – 000	0.99 mm (0.0390 in)
O	23945 – P21 – 000	1.02 mm (0.0402 in)
P	23946 – P21 – 000	1.05 mm (0.0413 in)
Q	23947 – P21 – 000	1.08 mm (0.0425 in)
R	23948 – P21 – 000	1.11 mm (0.0437 in)
S	23949 – P21 – 000	1.14 mm (0.0449 in)
T	23950 – P21 – 000	1.17 mm (0.0461 in)
U	23951 – P21 – 000	1.20 mm (0.0472 in)
V	23952 – P21 – 000	1.23 mm (0.0484 in)
W	23953 – P21 – 000	1.26 mm (0.0496 in)
X	23954 – P21 – 000	1.29 mm (0.0508 in)
Y	23955 – P21 – 000	1.32 mm (0.0520 in)
Z	23956 – P21 – 000	1.35 mm (0.0531 in)
AA	23957 – P21 – 000	1.38 mm (0.0543 in)
AB	23958 – P21 – 000	1.41 mm (0.0555 in)
AC	23959 – P21 – 000	1.44 mm (0.0567 in)
AD	23960 – P21 – 000	1.47 mm (0.0579 in)
AE	23961 – P21 – 000	1.50 mm (0.0591 in)
AF	23962 – P21 – 000	1.53 mm (0.0602 in)
AG	23963 – P21 – 000	1.56 mm (0.0614 in)
AH	23964 – P21 – 000	1.59 mm (0.0626 in)
AI	23965 – P21 – 000	1.62 mm (0.0638 in)
AJ	23966 – P21 – 000	1.65 mm (0.0650 in)
AK	23967 – P21 – 000	1.68 mm (0.0661 in)
AL	23968 – P21 – 000	1.71 mm (0.0673 in)
AM	23969 – P21 – 000	1.74 mm (0.0685 in)
AN	23970 – P21 – 000	1.77 mm (0.0697 in)
AO	23971 – P21 – 000	1.80 mm (0.0709 in)

7. Check the thrust clearance in the manner described below.

   NOTE: Carry out the measurement at normal room temperature.

   –1. Install the thrust shim selected and oil guide plate in the transmission housing.

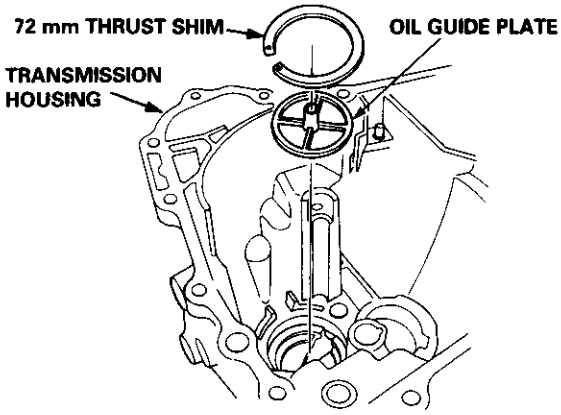

   –2. Install the spring washer and washer on the ball bearing.

   NOTE:
   - Clean the spring washer, washer and thrust shim throughly before installation.
   - Install the spring washer, washer and thrust shim properly.

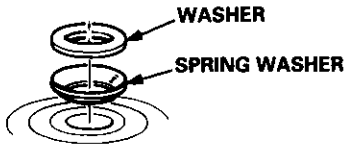

   –3. Install the mainshaft in the clutch housing.

   –4. Place the transmission housing over the mainshaft and onto the clutch housing.

   –5. Tighten the clutch and transmission housings with several 8 mm bolts.

   NOTE: It is not necessary to use sealing agent between the housings.

   8 x 1.25 mm
   27 N·m (2.8 kgf·m, 20 lbf·ft)

   –6. Tap the mainshaft with a plastic hammer.

(cont'd)

Adjustment (cont'd)

-7. Slide the mainshaft base over the mainshaft.

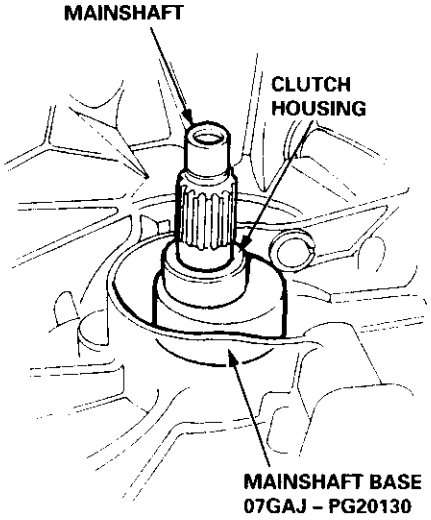

-8. Attach the mainshaft holder to the mainshaft as follows:

NOTE:
- Back-out the mainshaft holder bolt and loosen the two hex bolts.
- Fit the holder over the mainshaft so its lip is towards the transmission.
- Align the mainshaft holder's lip around the groove at the inside of the mainshaft splines, then tighten the hex bolts.

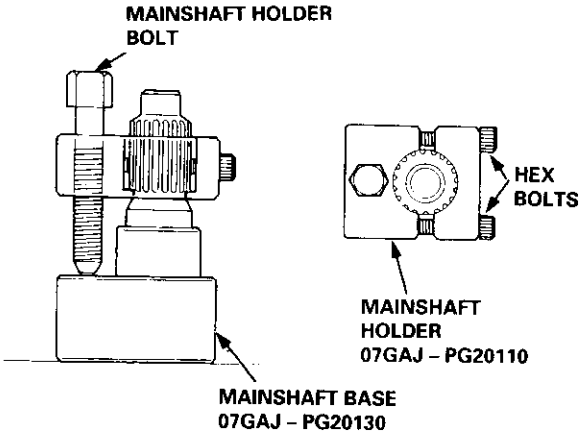

-9. Seat the mainshaft fully by tapping its end with a plastic hammer.

-10. Thread the mainshaft holder bolt in until it just contacts the wide surface of the mainshaft base.

-11. Zero a dial gauge on the end of the mainshaft.

-12. Turn the mainshaft holder bolt clockwise; stop turning when the dial gauge has reached its maximum movement. The reading on the dial gauge is the amount of mainshaft end play.

CAUTION: Turning the mainshaft holder bolt more than 60 degrees after the needle of the dial gauge stops moving may damage the transmission.

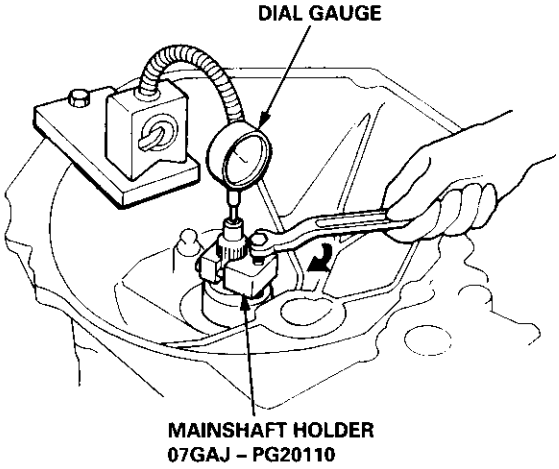

-13. If the reading is within the standard, the clearance is correct.
If the reading is not within the standard, recheck the shim thickness.

Standard: 0.11 - 0.18 mm (0.004 - 0.007 in)

Reassembly

1. Install the new oil seal.
2. Set the change piece.
3. Install the shift rod.
4. Install the steel ball, the spring, and the set screw.
5. Install the change piece attaching bolt.
6. Install the shift rod boots.

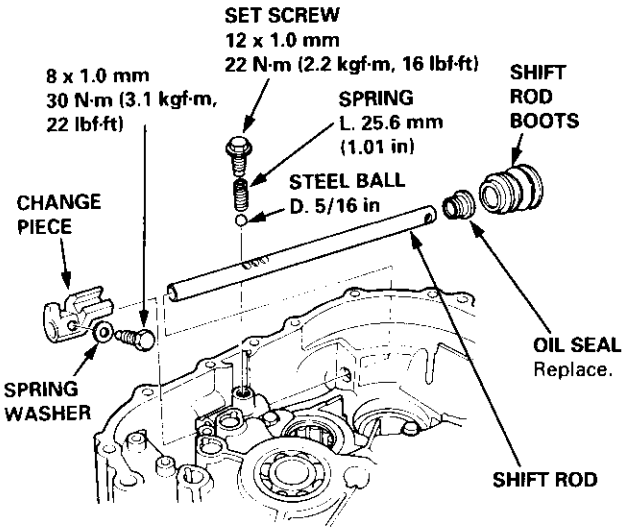

7. Install the oil chamber plate.

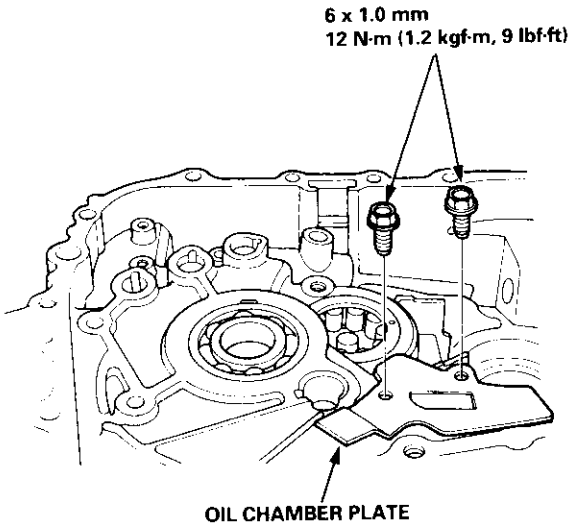

8. Install the differential assembly.

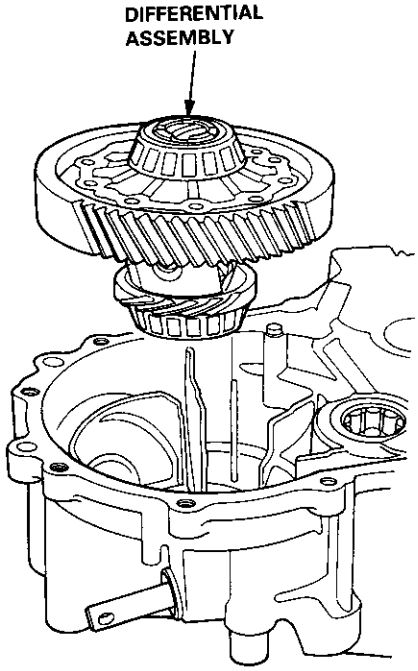

9. Set the spring washer and the washer.
10. Install the mainshaft, the countershaft, and the shift fork assemblies.

    NOTE: Align the finger of the interlock with the groove in the shift fork shaft.

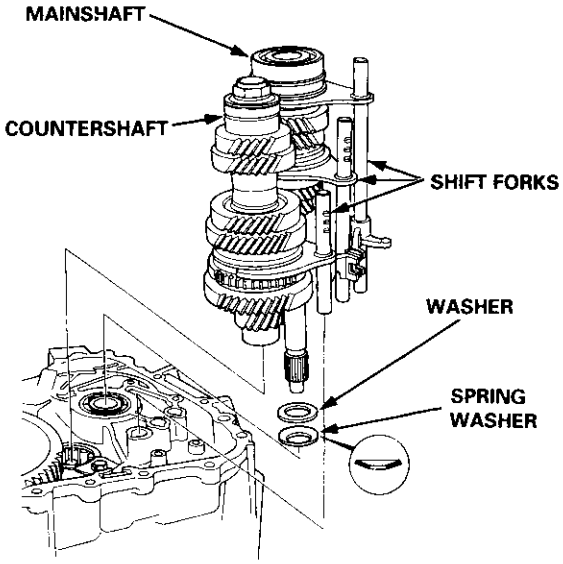

(cont'd)

Reassembly (cont'd)

11. Install the change holder assembly.

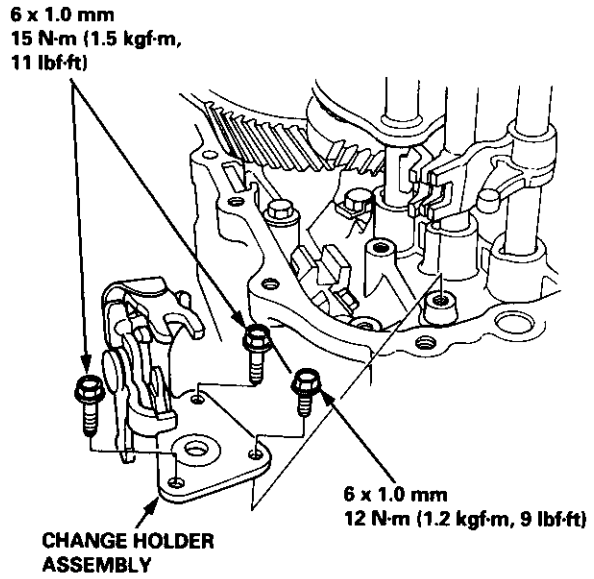

12. Install the shift piece and the interlock, then install the shift piece shaft.

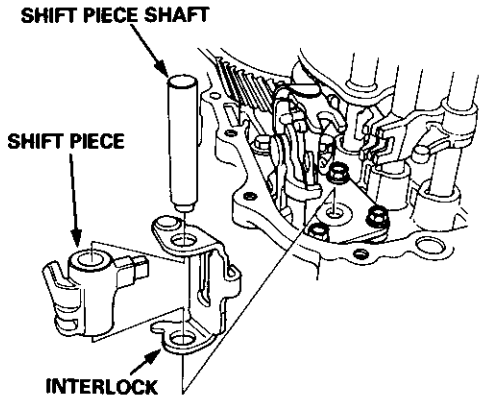

13. Measure the distance Ⓐ after mounting the shift piece shaft. If it's incorrect, check the installation.

Distance Ⓐ: 11.9 – 12.3 mm (0.47 – 0.48 in)

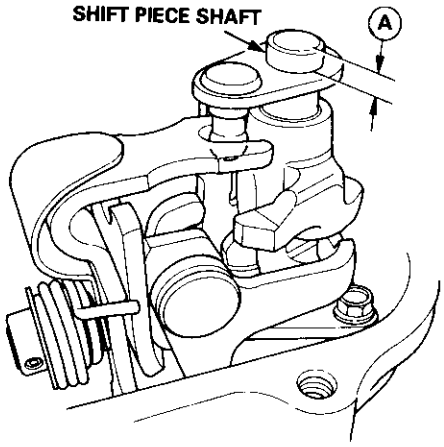

14. Install the washer (B18C1 engine), the reverse idler gear, and the reverse idler gear shaft.

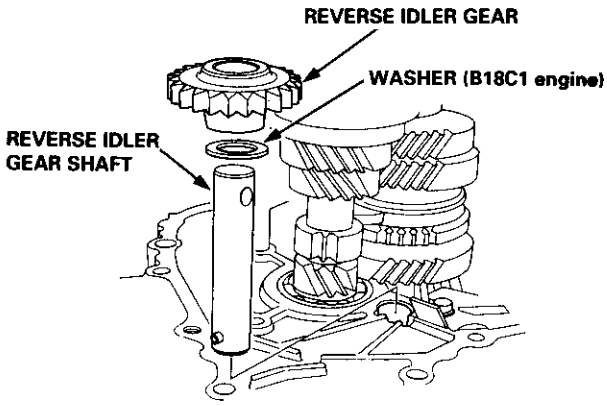

15. Install the reverse change holder.

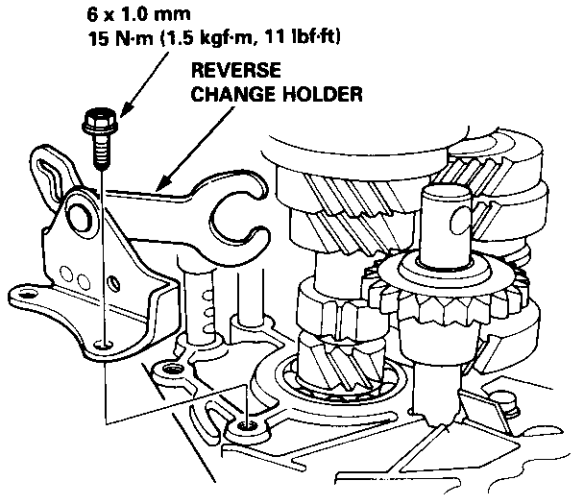

16. Install the oil guide plate and the 72 mm thrust shim into the transmission housing.

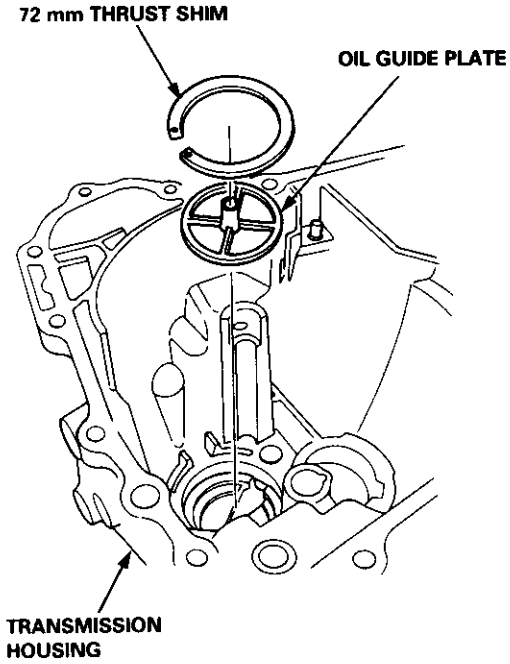

17. Install the oil gutter plate.

18. Bend the hook of the oil gutter plate, then install the 16 mm sealing bolt.

NOTE: Apply liquid gasket (P/N 08718 – 0001) to the threads.

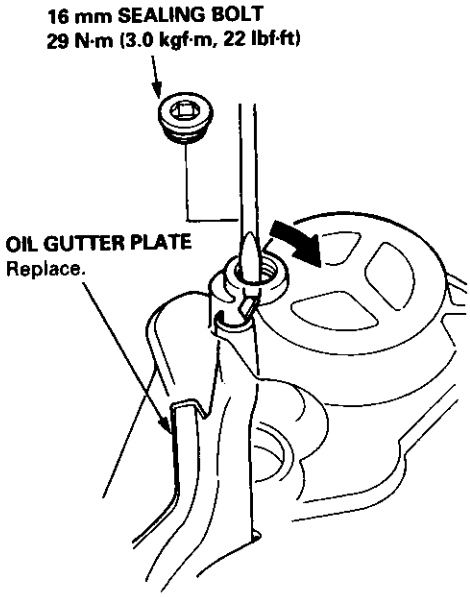

19. Apply liquid gasket to the surface of the transmission housing as shown.

NOTE:
- Use liquid gasket (P/N 08718 – 0001).
- Remove the dirt and oil from the sealing surface.
- Seal the entire circumference of the bolt holes to prevent oil leakage.
- If 20 minutes have passed after applying liquid gasket, reapply it and assemble the housings, and allow it to cure at least 30 minutes after assembly before filling the transmission with oil.

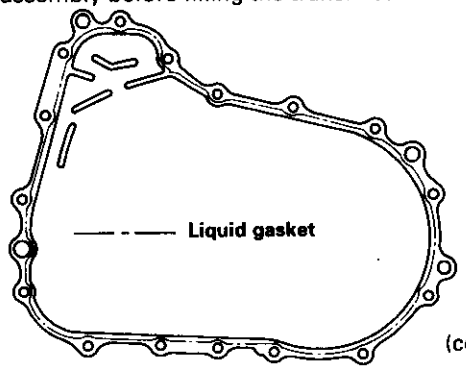

(cont'd)

Reassembly (cont'd)

20. Install the dowel pins.

21. Install the transmission housing by aligning the groove in the housing with finger on the stopper ring.

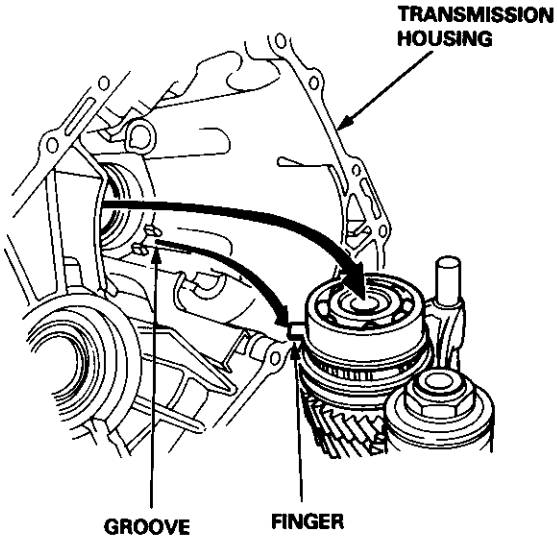

22. Lower the transmission housing with the snap ring pliers and set the snap ring in the groove of the countershaft bearing.

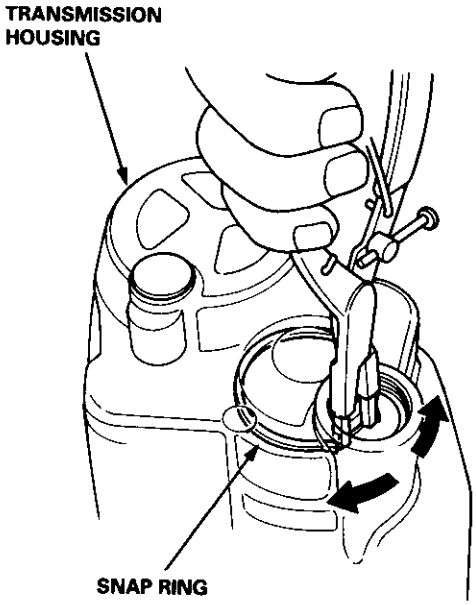

23. Check that the snap ring is securely seated in the groove of the countershaft bearing.

Dimension Ⓐ as installed: 4.6 – 8.3 mm (0.181 – 0.327 in)

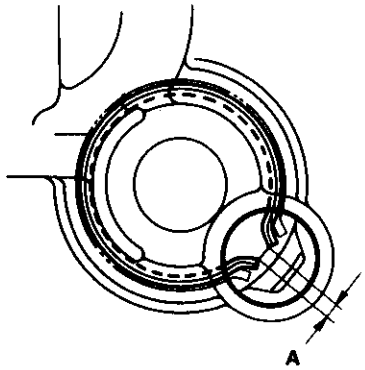

24. Install the transmission hanger A and back-up light switch clamp, then tighten the transmission housing attaching bolts in the numbered sequence shown below.

8 x 1.25 mm
27 N·m (2.8 kgf·m, 20 lbf·ft)

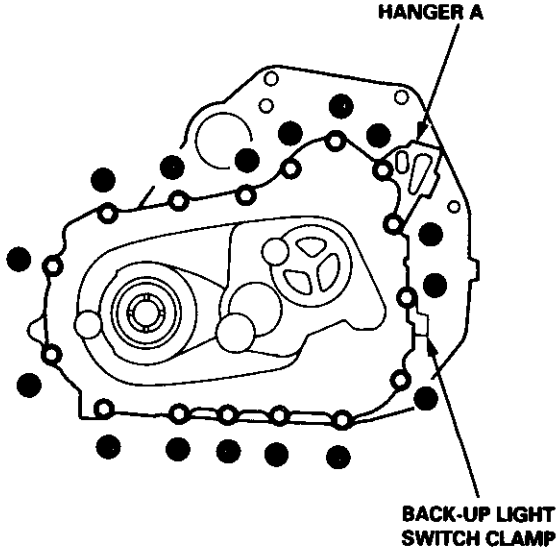

25. Install the 32 mm sealing bolt.

NOTE: Apply liquid gasket (P/N 08718 – 0001) to the threads.

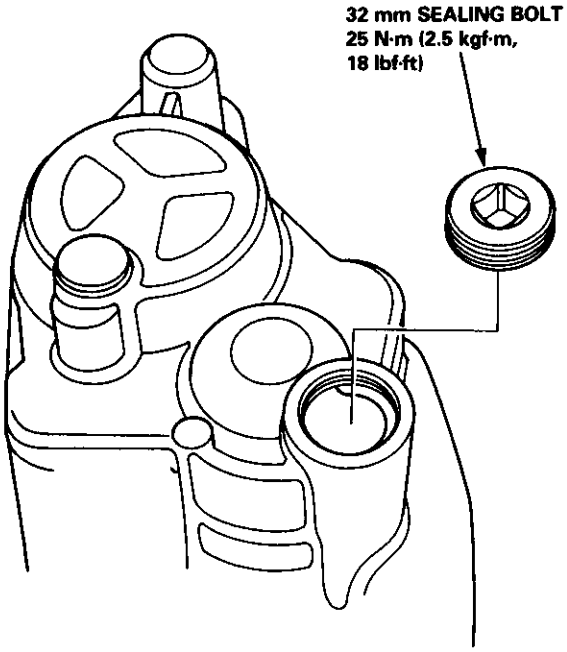

26. Tighten the reverse idler gear shaft bolt.

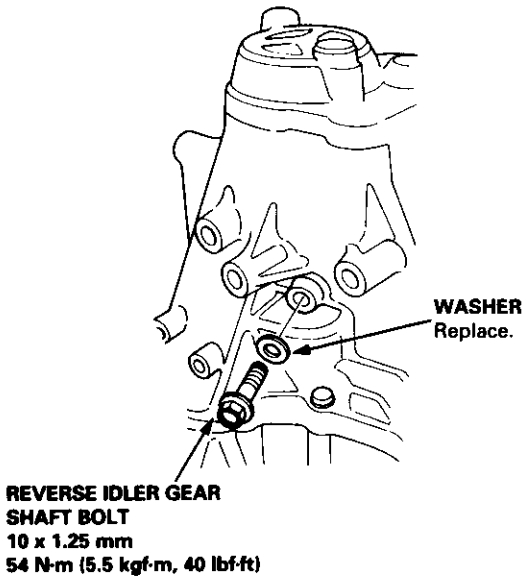

27. Install the steel balls, the springs, and the set screws.

28. Install the back-up light switch and the transmission hanger B.

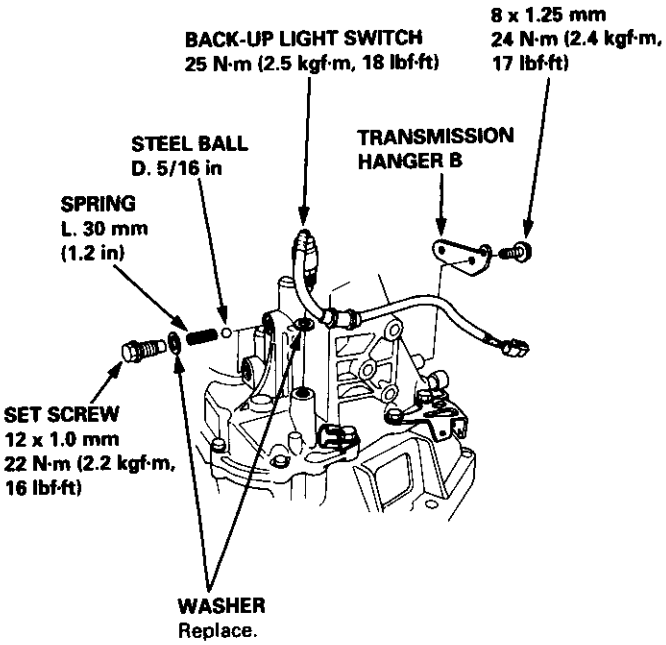

Installation

1. Install the dowel pins on the clutch housing.

2. Apply grease to the parts as shown, then install the release fork and release bearing.

   NOTE: Use only Super High Temp Urea Grease (P/N 08798 – 9002).

3. Install the release fork boot.

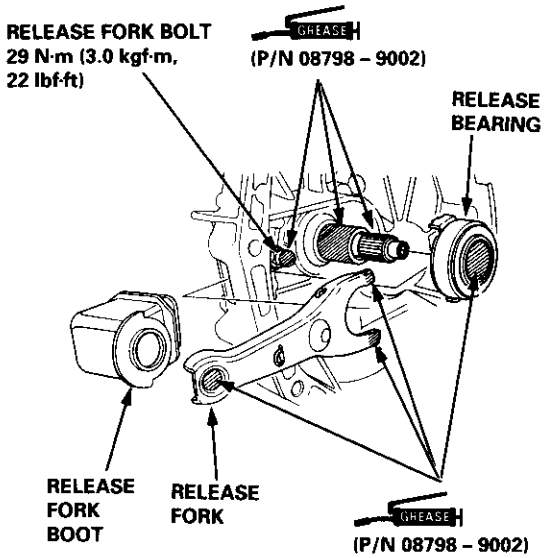

4. Place the transmission on the transmission jack, and raise it to the engine level.

5. Install the transmission mounting bolts and the rear mount bracket bolts.

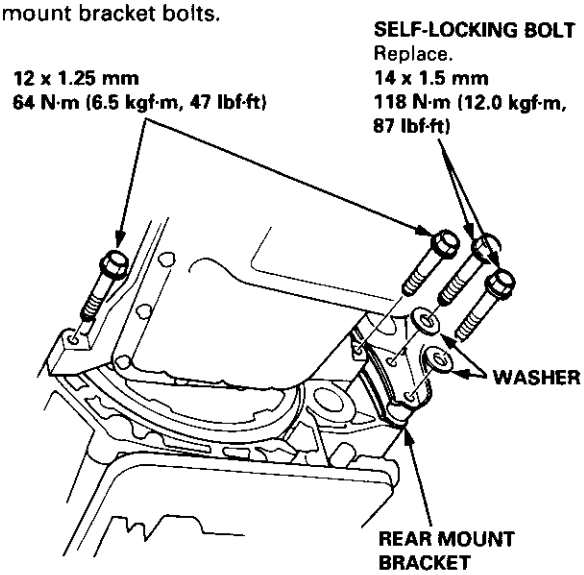

6. Raise the transmission, then install the transmission mount.

   NOTE: Torque the mounting bolt and nuts in the sequence shown.

   CAUTION: Check that the bushings are not twisted or offset.

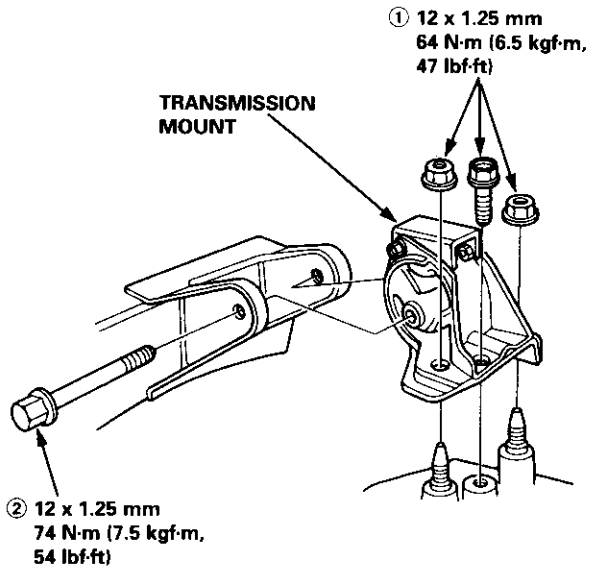

7. Install the three upper transmission mounting bolts and lower starter motor mounting bolt.

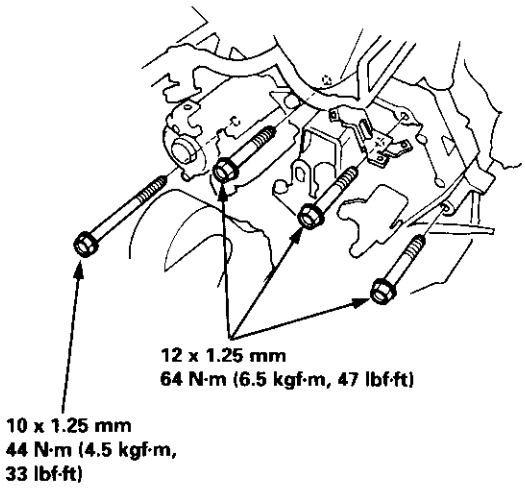

8. Install the right front mount/bracket.

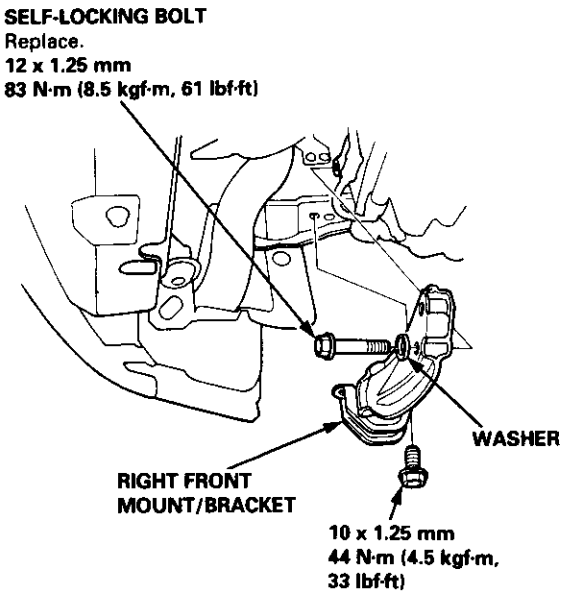

9. Install the clutch cover.

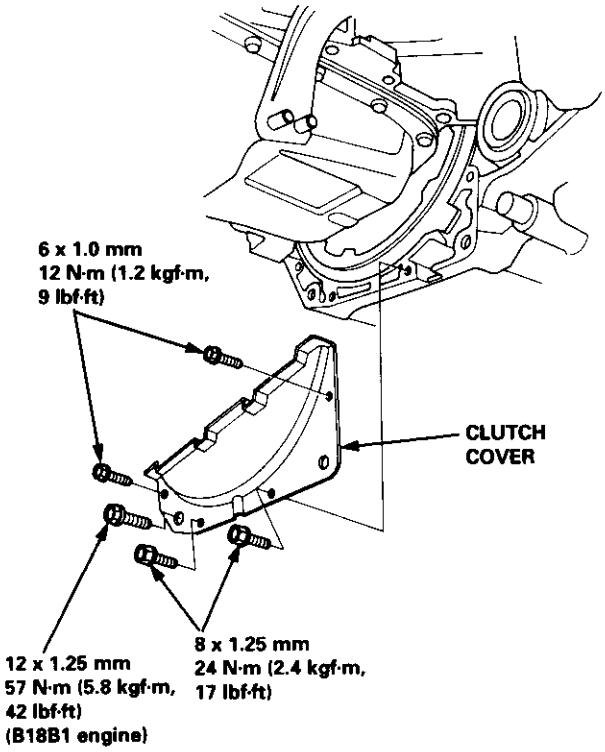

10. Install the front (B18C1 engine) and rear engine stiffeners.

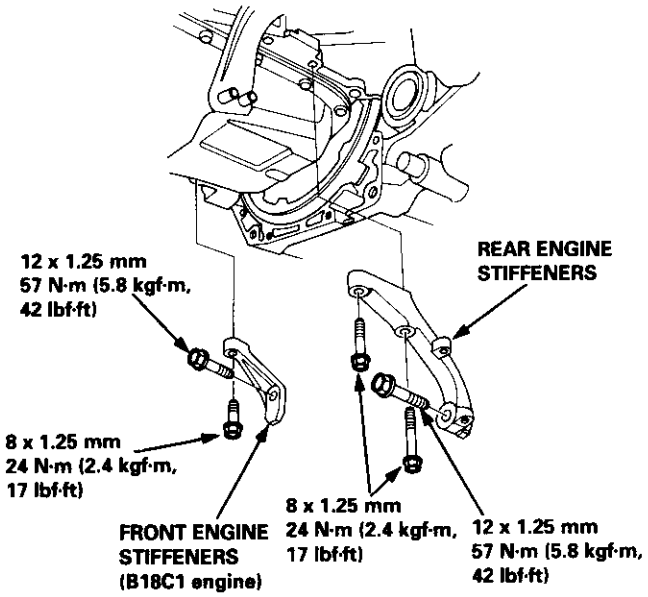

11. Install the change rod, the spring pin, and the clip.

NOTE:
- Install the clip and the spring pin on the change joint as shown.
- Turn the shift rod boot so the hole is facing down as shown.
- Make sure the shift rod boot is installed on the change rod.

12. Install the change extension.

13. Install the heat shield (B18C1 engine).

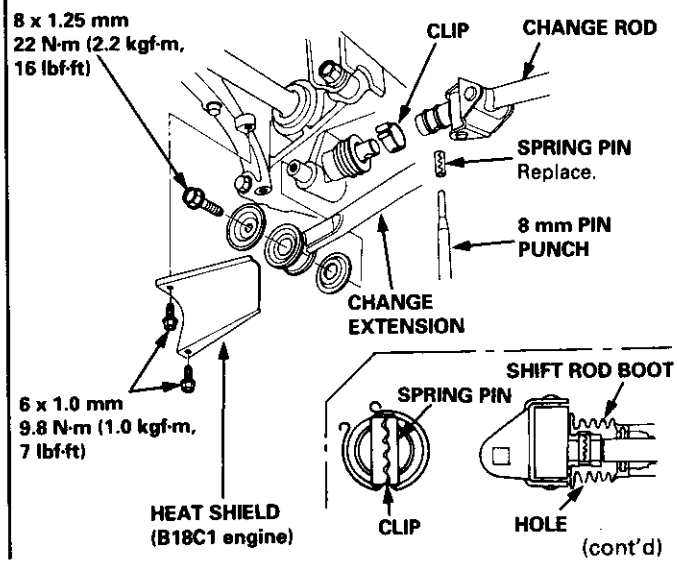

(cont'd)

Installation (cont'd)

14. Install the intermediate shaft and the driveshafts (see section 16).

    NOTE: Replace the set rings with new ones.

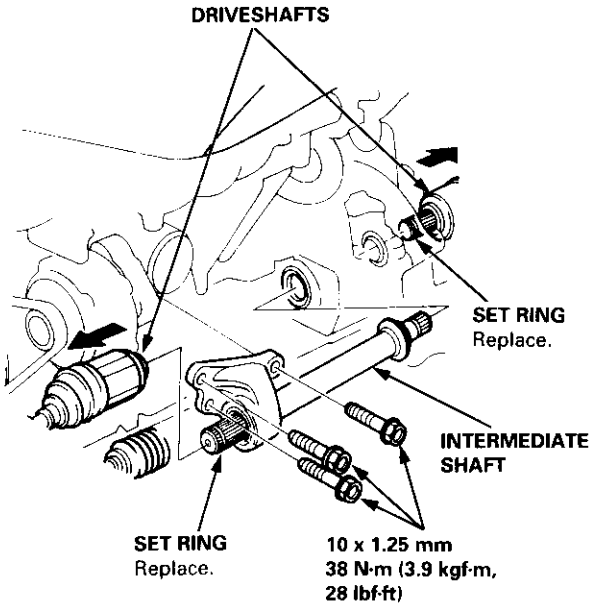

15. Install the ball joints onto the lower arm (see section 18).

16. Install the right damper fork (see section 18).

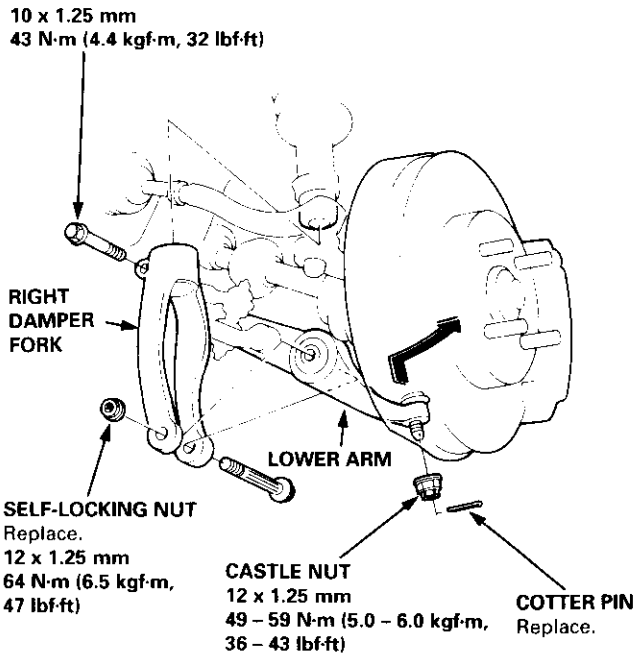

17. Install the exhaust pipe A, and the three way catalytic converter (B18C1 engine), and connect the heated oxygen sensor (HO2S) connector.

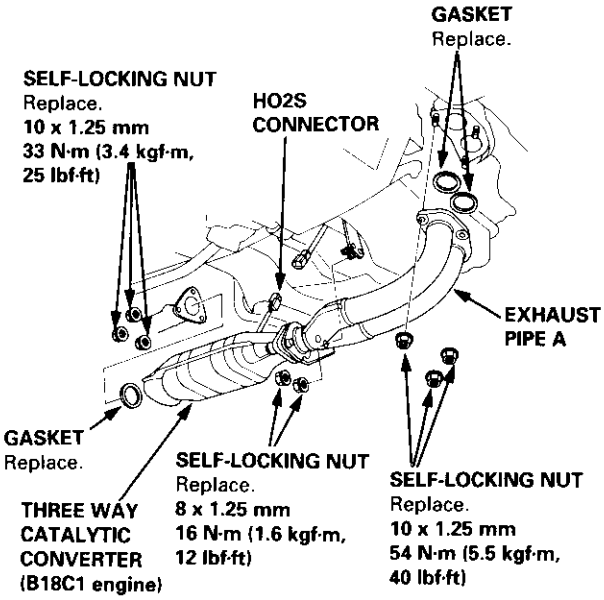

18. Install the engine splash shield.

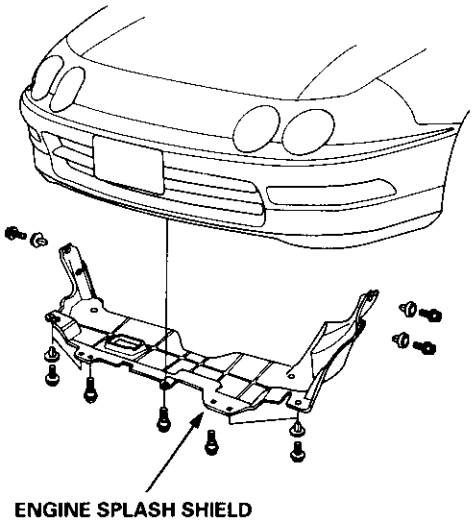

19. Install the slave cylinder, then install the clutch pipe bracket.

NOTE: Use only Super High Temp Urea Grease (P/N 08798 – 9002).

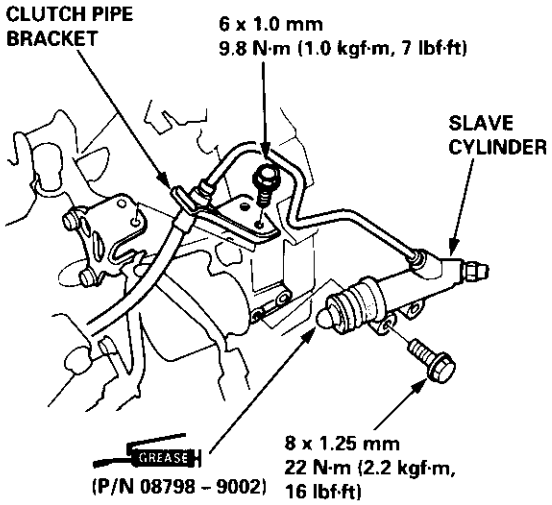

20. Connect the vehicle speed sensor (VSS) connector and the starter motor cables.

21. Install the wire harness clamps.

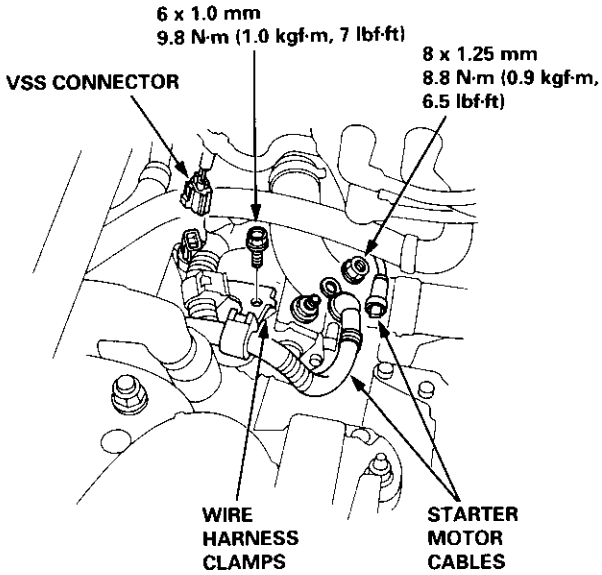

22. Install the lower radiator hose clamp on the transmission hanger B.

23. Connect the transmission ground wire and the back-up light switch connector.

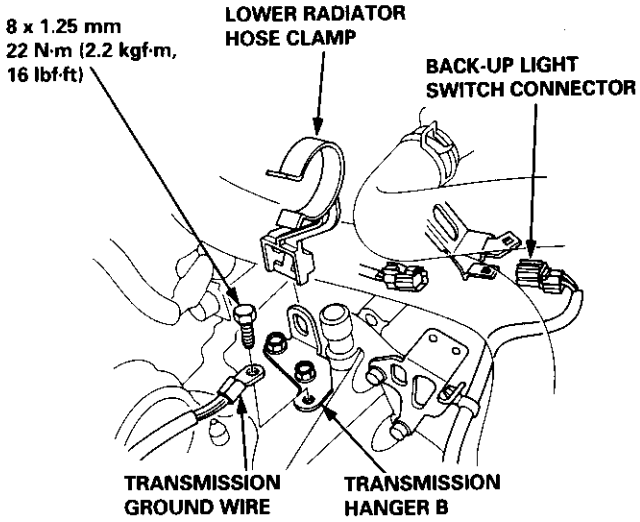

24. Install the air cleaner housing assembly and the air intake duct.

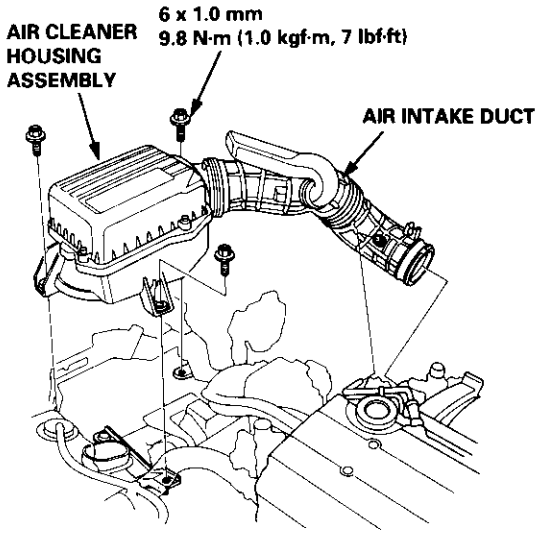

25. Refill the transmission with oil (see page 13-3).

26. Connect the positive (+) cable first, then connect the negative (–) cable to the battery.

27. Check the clutch operation.

28. Shift the transmission, and check for smooth operation.

29. Check the front wheel alignment (see section 18).

Gearshift Mechanism

Overhaul

NOTE:

- Inspect rubber parts for wear and damage when disassembling; replace any worn or damaged parts.
- Install the spring pin and the clip on the change joint as shown.
- Turn the shift rod boot so the hole is facing down as shown.
- Make sure the shift rod boot is installed on the change rod.

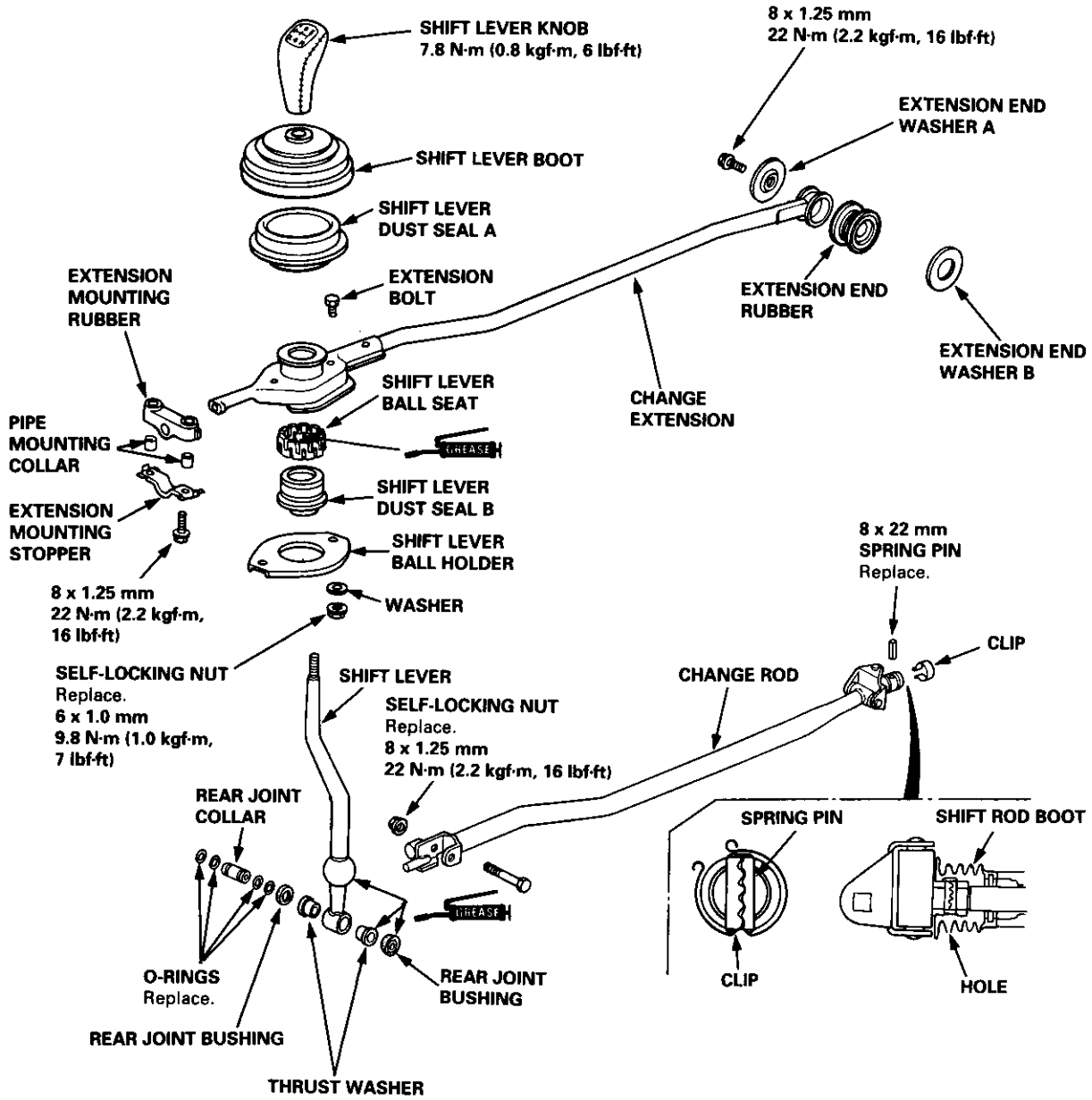

Automatic Transmission

Special Tools 14-2
Description 14-3
Clutches 14-6
Power Flow 14-8
Electronic Control System 14-18
Hydraulic Control 14-23
Hydraulic Flow 14-28
Lock-up System 14-38

Electrical System
Component Location 14-45
Circuit Diagram 14-46
*Troubleshooting Procedures 14-48
Symptom-to-Component Chart
Electrical System 14-50
Electrical Troubleshooting
Troubleshooting Flowchart 14-52
Lock-up Control Solenoid Valve A/B
Test 14-82
Replacement 14-82
Shift Control Solenoid Valve A/B
Test 14-83
Replacement 14-83
Transmission Control Module (TCM)
*Replacement 14-84
Mainshaft/Countershaft Speed Sensors
Replacement 14-85

Hydraulic System
Symptom-to-Component Chart
Hydraulic System 14-86
Road Test 14-90
Stall Speed
Test 14-92
Fluid Level
Checking/Changing 14-93
Pressure Testing 14-94

Transmission
Transmission
Removal 14-99
Illustrated Index
Right Side Cover 14-104
Transmission Housing 14-106
Torque Converter Housing/Valve Body 14-108
Right Side Cover
Removal 14-110
Transmission Housing
Removal 14-112
Torque Converter Housing/Valve Body
Removal 14-114
Valve Caps
Description 14-116
Valve Body
Repair 14-117
Valve
Assembly 14-118
Oil Pump
Inspection 14-119
Main Valve Body
Disassembly/Inspection/Reassembly 14-120
Regulator Valve Body
Disassembly/Inspection/Reassembly 14-122
Lock-up Valve Body
Disassembly/Inspection/Reassembly 14-123
Secondary Valve Body
Disassembly/Inspection/Reassembly 14-124
Servo Body
Disassembly/Inspection/Reassembly 14-126
1st-hold Accumulator/Right Side Cover
Disassembly/Inspection/Reassembly 14-128
Mainshaft
Disassembly/Inspection/Reassembly 14-129
Inspection 14-130
Countershaft
Disassembly/Inspection/Reassembly 14-132
Disassembly/Reassembly 14-133
Inspection 14-134
One-way Clutch/Parking Gear
Disassembly/Inspection 14-137
Sub-shaft
Disassembly/Inspection/Reassembly 14-138
Disassembly/Reassembly 14-139
Sub-shaft Bearings
Replacement 14-140
Clutch
Illustrated Index 14-141
Disassembly 14-144
Reassembly 14-146
Torque Converter Housing Bearings
Mainshaft Bearing/Oil Seal Replacement 14-150
Countershaft Bearing Replacement 14-151
Transmission Housing Bearings
Mainshaft/Countershaft Bearing Replacement 14-152
Sub-shaft Bearing Replacement 14-153
Reverse Idler Gear
Installation 14-154
Parking Brake Stopper
Inspection/Adjustment 14-154
Transmission
Reassembly 14-156
Torque Converter/Drive Plate 14-163
Transmission
Installation 14-164
Cooler Flushing 14-168
*Shift Cable
Removal/Installation 14-170
Adjustment 14-171
*Gearshift Selector
Disassembly/Reassembly 14-172
*Shift Indicator Panel
Adjustment 14-173
Throttle Control Cable
Inspection 14-174
Adjustment 14-176

Special Tools

Ref. No.	Tool Number	Description	Qty	Page Reference
①	07GAB–PF50100 or 07GAB–PF50101	Mainshaft Holder	1	14-111,160
②	07GAE–PG40200	Clutch Spring Compressor Bolt Assembly	1	14-144,147
③	07HAC–PK4010A	Housing Puller	1	14-113
④	07HAE–PL50100	Clutch Spring Compressor Attachment	1	14-144,147
⑤	07LAE–PX40100	Clutch Spring Compressor Attachment	1	14-144,147
⑥	07LAJ–PT3010A	Test Harness	1	14-49,90
⑦	07MAJ-PY4011A	A/T Oil Pressure Hose, 2210 mm	1	14-94
⑧	07MAJ–PY40120	A/T Oil Pressure Adapter	1	14-94
⑨	07PAZ–0010100	SCS Short Connector	1	14-48
⑩	07406–0020003	A/T Oil Pressure Gauge Set w/panel	1	14-94
⑪	07406–0070000	A/T Low Pressure Gauge w/panel	1	14-94
⑫	07736–A01000A	Adjustable Bearing Puller, 25-40 mm	1	14-150,151
⑬	07746–0010100	Attachment, 32 x 35 mm	1	14-139,140
⑭	07746–0010500	Attachment, 62 x 68 mm	1	14-140,150,151,152,153
⑮	07746–0010600	Attachment, 72 x 75 mm	1	14-150,152
⑯	07746–0030100	Driver, 40 mm I.D.	1	14-134
⑰	07749–0010000	Driver	1	14-139,140,150,151,152
⑱	07947–6340500	Driver Attachment	1	14-150

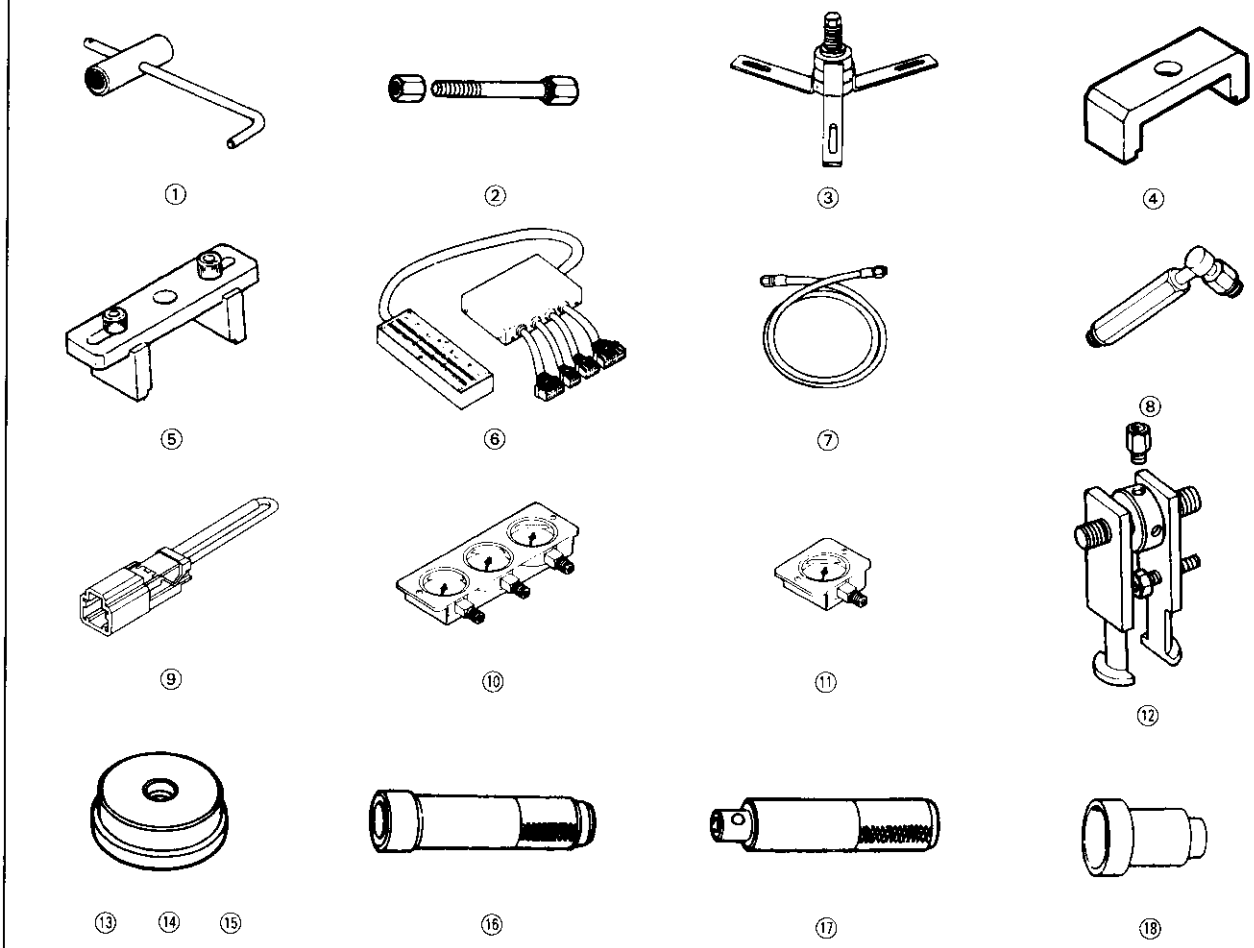

*⑫ Must be used with commercially available 3/8 in. x 16 threads/in. slide hammer.

Description

The Automatic Transmission is a combination of a 3-element torque converter and triple-shaft electronically controlled automatic transmission which provides 4 speeds forward and 1 speed reverse. The entire unit is positioned in line with the engine.

Torque Converter, Gears and Clutches

The torque converter consists of a pump, turbine and stator assembly in a single unit. The torque converter is connected to the engine crankshaft so they turn together as a unit as the engine turns. Around the outside of the torque converter is a ring gear which meshes with the starter pinion when the engine is being started. The entire torque converter assembly serves as a flywheel while transmitting power to the transmission mainshaft.

The transmission has three parallel shafts, the mainshaft, countershaft and sub-shaft. The mainshaft is in line with the engine crankshaft.

The mainshaft includes the clutches for 1st, and 2nd/4th, and gears for 3rd, 2nd, 4th, reverse and 1st (3rd gear is integral with the mainshaft, while reverse gear is integral with the 4th gear).

The countershaft includes the 3rd clutch and gears for 3rd, 2nd, 4th, reverse, 1st and parking. Reverse and 4th gears can be locked to the countershaft at its center, providing 4th gear or reverse, depending on which way the selector is moved.

The sub-shaft includes the 1st-hold clutch and gears for 1st and 4th.

The gears on the mainshaft are in constant mesh with those on the countershaft and sub-shaft. When certain combinations of gears in the transmission are engaged by the clutches, power is transmitted from the mainshaft to the countershaft via the sub-shaft to provide [D4], [D3], [2], [1] and [R] position.

Electronic Control

The electronic control system consists of the Transmission Control Module (TCM), sensors, and 4 solenoid valves. Shifting and lock-up are electronically controlled for comfortable driving under all conditions.

The TCM is located below the dashboard, behind the left side kick panel on the driver's side.

Hydraulic Control

The valve bodies include the main valve body, secondary valve body, regulator valve body, servo body, and lock-up valve body through the respective separator plates.

They are bolted on the torque converter housing.

The main valve body contains the manual valve, 1-2 shift valve, 2-3 shift valve, Clutch Pressure Control (CPC) valve, 4th exhaust valve, relief valve, and oil pump gears.

The secondary valve body contains the 4-3 kick-down valve, 3-2 kick-down valve, 2-3 orifice control valve, 3-4 shift valve, orifice control valve, modulator valve, and servo control valve.

The regulator valve body contains the pressure regulator valve, lock-up control valve, torque converter check valve, and cooler check valve.

The servo body contains the servo valve which is integrated with the reverse shift fork, throttle valve B, and accumulators.

The lock-up valve body contains the lock-up shift valve and lock-up timing B valve, and is bolted on the secondary valve body.

Fluid from the regulator passes through the manual valve to the various control valves.

Shift Control Mechanism

Input to the TCM from various sensors located throughout the car determines which shift control solenoid valve should be activated.

Activating a shift control solenoid valve changes modulator pressure, causing a shift valve to move. This pressurizes a line to one of the clutches, engaging that clutch and its corresponding gear.

Lock-up Mechanism

In [D4] position, in 2nd, 3rd and 4th, and [D3] position in 3rd, pressurized fluid can be drained from the back of the torque converter through an oil passage, causing the lock-up piston to be held against the torque converter cover. As this takes place, the mainshaft rotates at the same speed as the engine crankshaft. Together with hydraulic control, the TCM optimizes the timing of the lock-up mechanism.

The lock-up valves control the range of lock-up according to lock-up control solenoid valves A and B, and throttle valve B. When lock-up control solenoid valves A and B activate, modulator pressure changes. Lock-up control solenoid valves A and B are mounted on the torque converter housing, and are controlled by the TCM.

(cont'd)

Description
(cont'd)

Gear Selection
The selector lever has seven positions; P PARK, R REVERSE, N NEUTRAL, D_4 1st through 4th positions, D_3 1st through 3rd positions, 2 2nd gear and 1 1st gear.

Position	Description
P PARK	Front wheels locked; parking pawl engaged with parking gear on countershaft. All clutches released.
R REVERSE	Reverse; reverse selector engaged with countershaft reverse gear and 4th clutch locked.
N NEUTRAL	All clutches released.
D_4 DRIVE (1st through 4th)	General driving; starts off in 1st, shifts automatically to 2nd, 3rd, then 4th, depending on vehicle speed and throttle position. Downshifts through 3rd, 2nd and 1st on deceleration to stop. The lock-up mechanism comes into operation in 2nd, 3rd and 4th when the transmission in D_4 position.
D_3 DRIVE (1st through 3rd)	For rapid acceleration at highway speeds and general driving; starts off in 1st, shifts automatically to 2nd then 3rd, depending on vehicle speed and throttle position. Downshifts through lower gears on deceleration to stop. The lock-up mechanism comes into operation in 3rd.
2 SECOND	Driving in 2nd gear; stays in 2nd gear, does not shift up and down. For engine braking or better traction starting off on loose or slippery surfece.
1 FIRST	Driving in 1st gear; stays in 1st gear, does not shift up. For engine braking.

Starting is possible only in P and N position through use of a slide-type, neutral-safety switch.

Automatic Transaxle (A/T) Gear Position Indicator
A/T gear position indicator in the instrument panel shows what gear has been selected without having look down at the console.

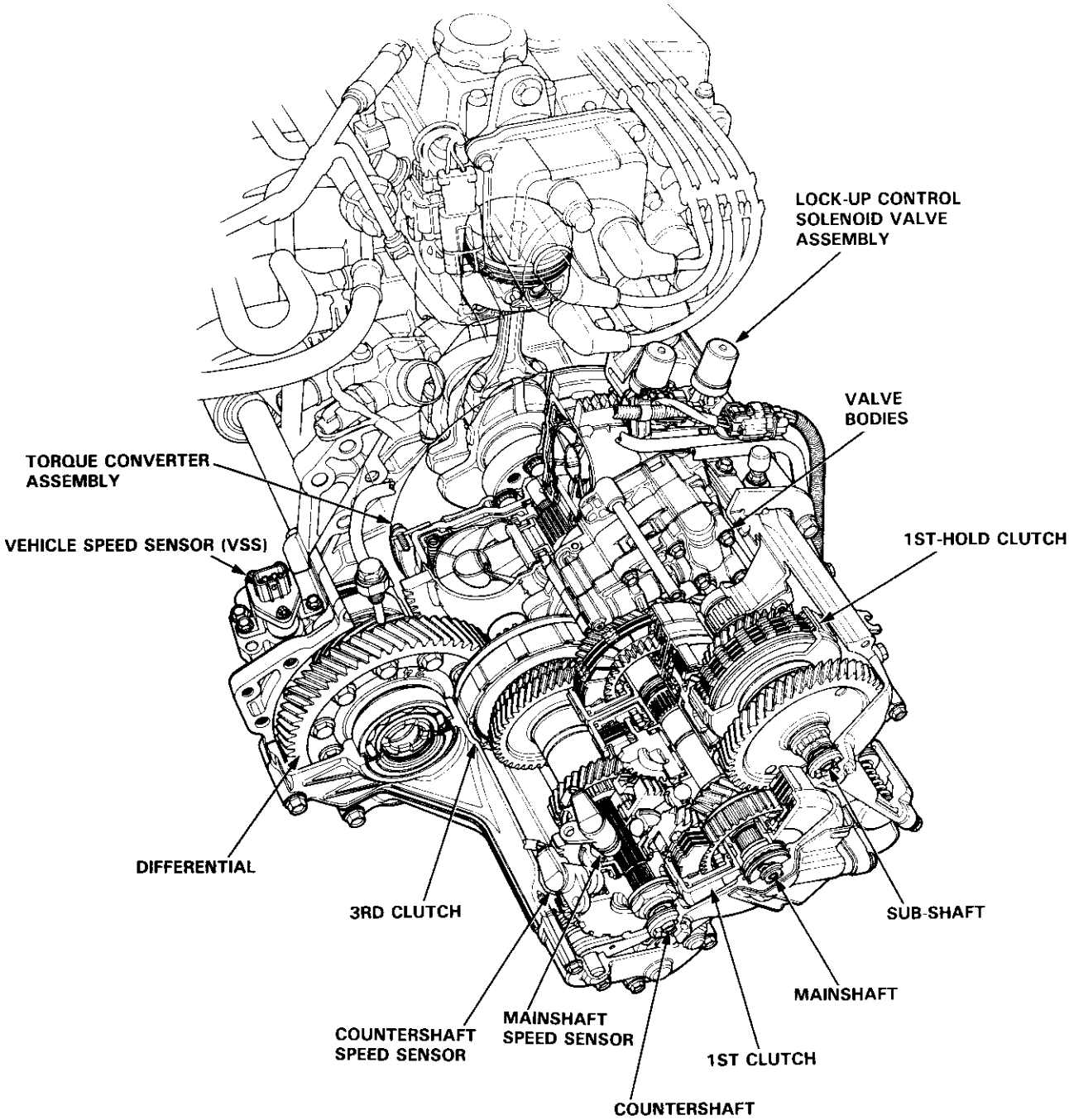
LOCK-UP CONTROL SOLENOID VALVE ASSEMBLY
VALVE BODIES
TORQUE CONVERTER ASSEMBLY
VEHICLE SPEED SENSOR (VSS)
1ST-HOLD CLUTCH
DIFFERENTIAL
3RD CLUTCH
SUB-SHAFT
MAINSHAFT
COUNTERSHAFT SPEED SENSOR
MAINSHAFT SPEED SENSOR
1ST CLUTCH
COUNTERSHAFT

Description

Clutches

The four speed automatic transmission uses hydraulically actuated clutches to engage or disengage the transmission gears. When clutch pressure is introduced into the clutch drum, the clutch piston is applied. This presses the friction discs and steel plates together, locking them so they don't slip. Power is then transmitted through the engaged clutch pack to its hub-mounted gear.

Likewise, when clutch pressure is bled from the clutch pack, the piston releases the friction discs and steel plates, and they are free to slide past each other while disengaged. This allows the gear to spin independently on its shaft, transmitting no power.

1st Clutch
The 1st clutch engages/disengages 1st gear, and is located at the end of the mainshaft, just behind the right side cover. The 1st clutch is supplied clutch pressure by its oil feed pipe within the mainshaft.

1st-hold Clutch
The 1st-hold clutch engages/disengages 1st-hold or [1] position, and is located at the center of the sub-shaft. The 1st-hold clutch is supplied clutch pressure by its oil feed pipe within the sub-shaft.

2nd Clutch
The 2nd clutch engages/disengages 2nd gear, and is located at the center of the mainshaft. The 2nd clutch is joined back-to-back to the 4th clutch. The 2nd clutch is supplied clutch pressure through the mainshaft by a circuit connected to the regulator valve body.

3rd Clutch
The 3rd clutch engages/disengages 3rd gear, and is located at the end of the countershaft, opposite the right side cover. The 3rd clutch is supplied clutch pressure by its oil feed pipe within the countershaft.

4th Clutch
The 4th clutch engages/disengages 4th gear, as well as reverse gear, and is located at the center of the mainshaft. The 4th clutch is joined back-to-back to the 2nd clutch. The 4th clutch is supplied clutch pressure by its oil feed pipe within the mainshaft.

One-way Clutch
The one-way clutch is positioned between the parking gear and 1st gear, with the parking gear splined to the countershaft. The 1st gear provides the outer race, and the parking gear provides the inner race surface. The one-way clutch locks up when power is transmitted from the mainshaft 1st gear to the countershaft 1st gear.
The 1st clutch and gears remain engaged in the 1st, 2nd, 3rd, and 4th gear ranges in the [D4], [D3] or [2] position.

However, the one-way clutch disengages when the 2nd, 3rd, or 4th clutches/gears are applied in the [D4], [D3] or [2] position.
This is because the increased rotational speed of the gears on the countershaft over-ride the locking "speed range" of the one-way clutch. Thereafter, the one-way clutch free-wheels with the 1st clutch still engaged.

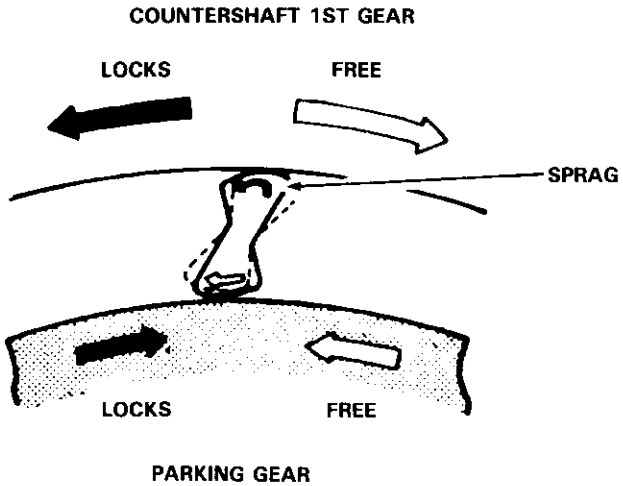

NOTE:
View from right side cover side.

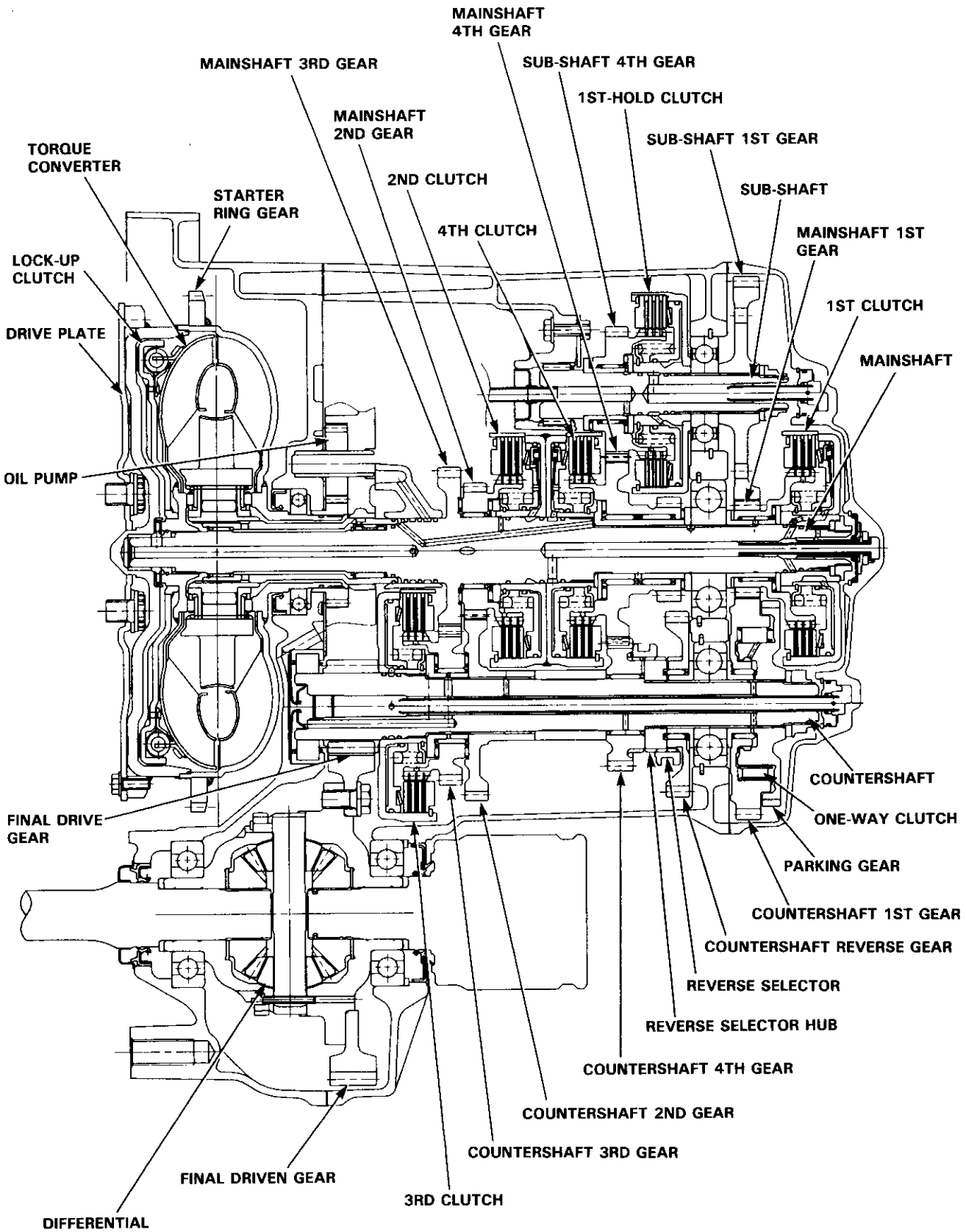
MAINSHAFT 4TH GEAR
MAINSHAFT 3RD GEAR
SUB-SHAFT 4TH GEAR
1ST-HOLD CLUTCH
MAINSHAFT 2ND GEAR
SUB-SHAFT 1ST GEAR
TORQUE CONVERTER
2ND CLUTCH
SUB-SHAFT
STARTER RING GEAR
4TH CLUTCH
MAINSHAFT 1ST GEAR
LOCK-UP CLUTCH
1ST CLUTCH
DRIVE PLATE
MAINSHAFT
OIL PUMP
COUNTERSHAFT
FINAL DRIVE GEAR
ONE-WAY CLUTCH
PARKING GEAR
COUNTERSHAFT 1ST GEAR
COUNTERSHAFT REVERSE GEAR
REVERSE SELECTOR
REVERSE SELECTOR HUB
COUNTERSHAFT 4TH GEAR
COUNTERSHAFT 2ND GEAR
COUNTERSHAFT 3RD GEAR
FINAL DRIVEN GEAR
3RD CLUTCH
DIFFERENTIAL

Description

Power Flow

POSITION \ PART		TORQUE CON-VERTER	1ST-HOLD CLUTCH	1ST GEAR 1ST CLUTCH	2ND GEAR 2ND CLUTCH	3RD GEAR 3RD CLUTCH	4TH		REVERSE GEAR	PARKING GEAR
							GEAR	CLUTCH		
P		○	X	X	X	X	X	X	X	○
R		○	X	X	X	X	X	○	○	X
N		○	X	X	X	X	X	X	X	X
D4	1ST	○	X	○	X	X	X	X	X	X
	2ND	○	X	*○	○	X	X	X	X	X
	3RD	○	X	*○	X	○	X	X	X	X
	4TH	○	X	*○	X	X	○	○	X	X
D3	1ST	○	X	○	X	X	X	X	X	X
	2ND	○	X	*○	○	X	X	X	X	X
	3RD	○	X	*○	X	○	X	X	X	X
2		○	X	*○	○	X	X	X	X	X
1		○	○	○	X	X	X	X	X	X

○: Operates, X: Doesn't operate, *: Although the 1st clutch engages, driving power is not transmitted as the one-way clutch slips.

N Position
Hydraulic pressure is not applied to the clutches. Power is not transmitted to the countershaft.

P Position
Hydraulic pressure is not applied to the clutches. Power is not transmitted to the countershaft.
The countershaft is locked by the parking pawl interlocking the parking gear.

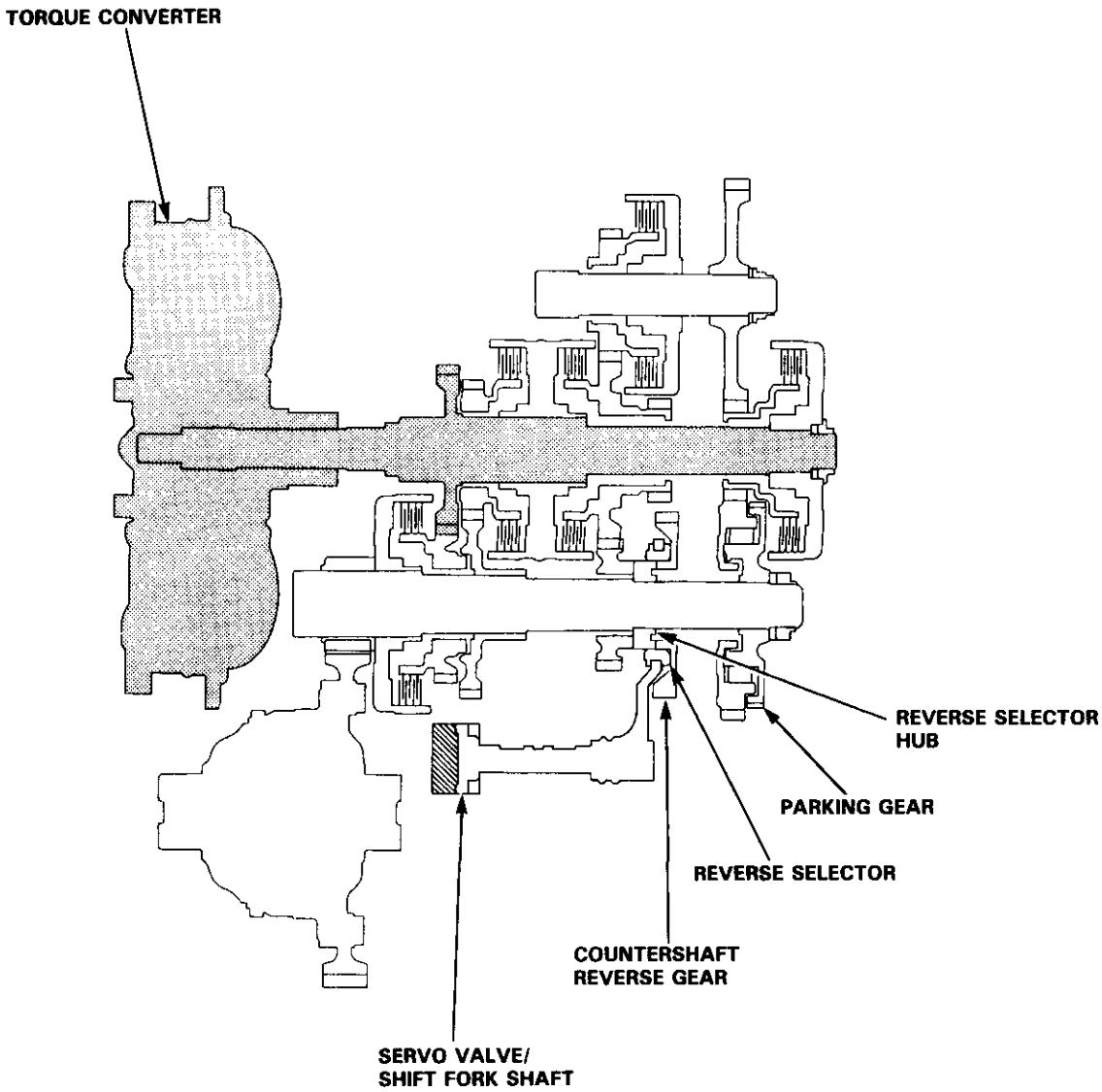

(cont'd)

Power Flow (cont'd)

[1] Position Acceleration

In [1] position, hydraulic pressure is applied to the 1st clutch and 1st-hold clutch.

The power flow when accelerating is as follows:

1. Hydraulic pressure is applied to the 1st clutch on the mainshaft and power is transmitted via the 1st clutch to the mainshaft 1st gear.

2. Hydraulic pressure is also applied to the 1st-hold clutch on the sub-shaft. Power transmitted to the mainshaft 1st gear is conveyed via the countershaft 1st gear to the one-way clutch, and via the sub-shaft 1st gear to the 1st-hold clutch. The one-way clutch is used to drive the countershaft, and the 1st-hold clutch drives the countershaft via the 4th gears.

3. Power is transmitted to the final drive gear and drives the final driven gear.

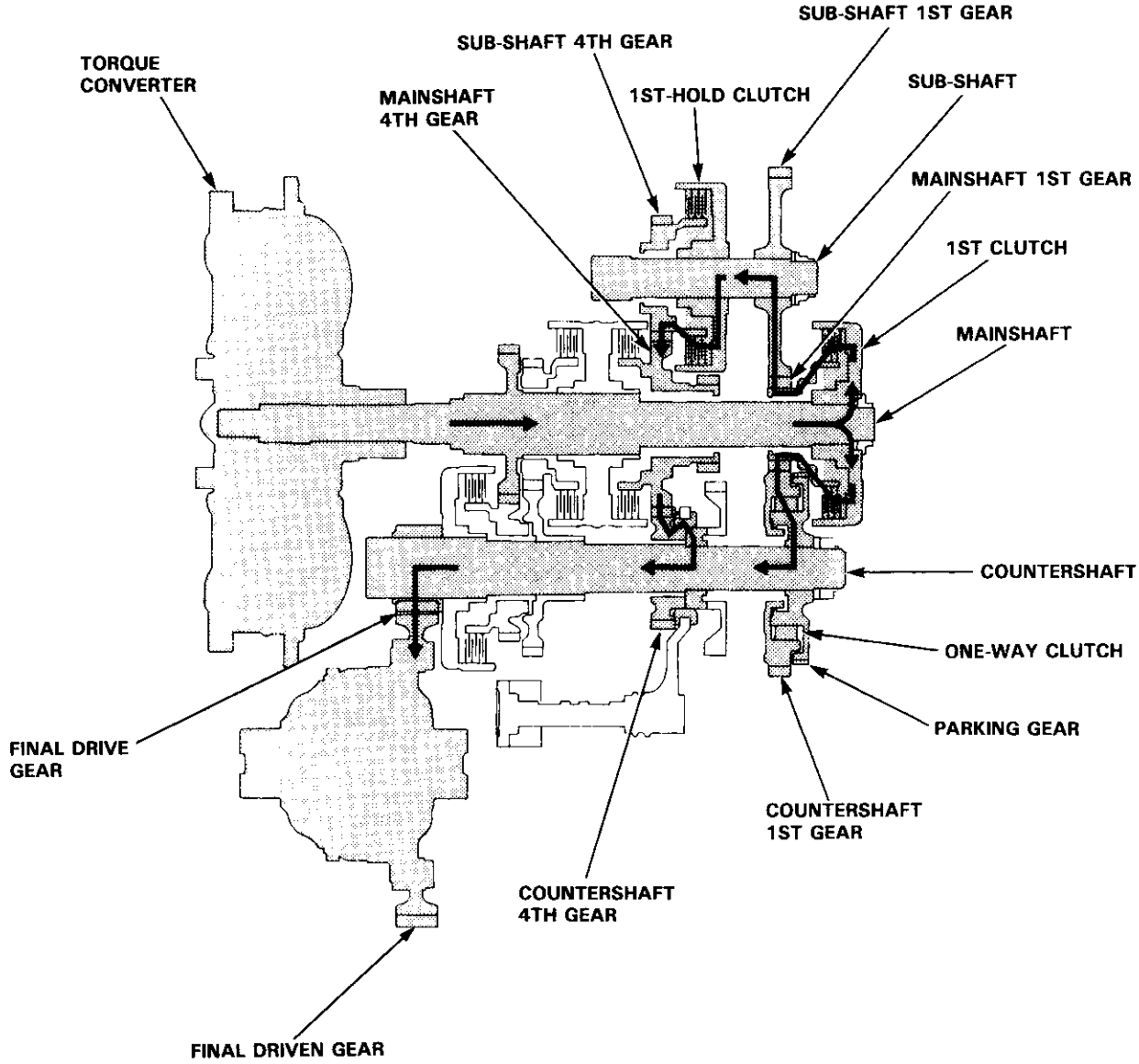

1 **Position Deceleration**

The power flow when decelerating is as follows;

1. Rolling resistance from the road surface goes through the front wheels to the final drive gear, then to the sub-shaft 1st gear via the 4th gear, and 1st-hold clutch which is applied during deceleration.

2. The one-way clutch becomes free at this time because torque reverses.

3. The counterforce conveyed to the countershaft 4th gear turns the sub-shaft 4th gear via the mainshaft 4th gear. At this time, since hydraulic pressure is also applied to the 1st clutch, counterforce is also transmitted to the mainshaft. As a result, engine braking can be obtained with 1st gear.

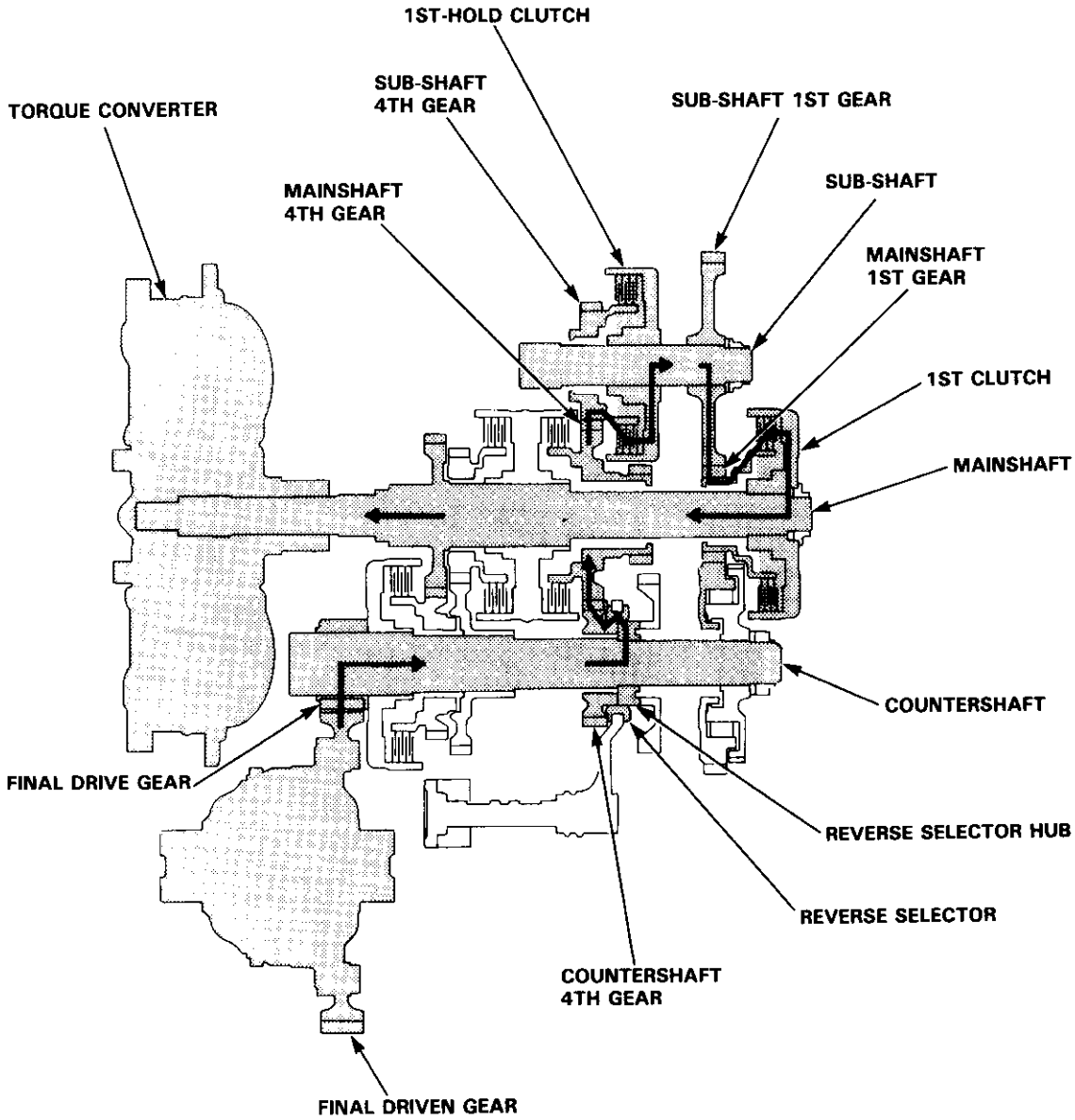

(cont'd)

Power Flow (cont'd)

2 Position

2 Position is provided to drive only 2nd speed.

1. Hydraulic pressure is applied to the 2nd clutch on the mainshaft and power is transmitted via the 2nd clutch to the mainshaft 2nd gear.
2. Power transmitted to the mainshaft 2nd gear is conveyed via the countershaft 2nd gear, and drives the countershaft.
3. Power is transmitted to the final drive gear and drives the final driven gear.

   NOTE:
   Hydraulic pressure is also applied to the 1st clutch, but since the rotation speed of the 2nd gear exceeds that of 1st gear, power from 1st gear is cut off at the one-way clutch.

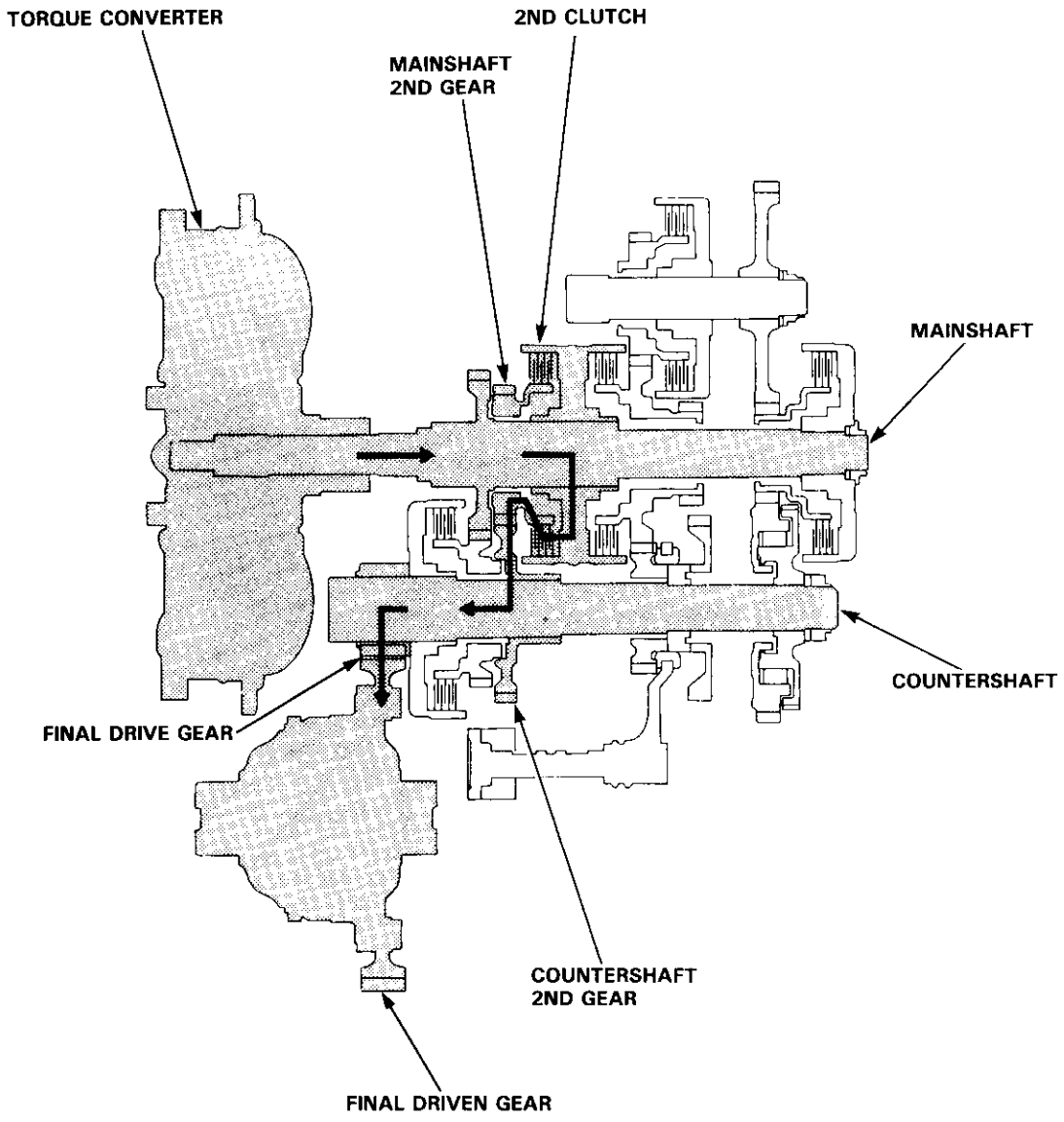

In [D4] or [D3] position, the optimum gear is automatically selected from 1st, 2nd, 3rd and 4th speeds, according to conditions such as the balance between throttle opening (engine load) and vehicle speed.

[D4] or [D3] Position, 1st speed

1. Hydraulic pressure is applied to the 1st clutch, which rotates together with the mainshaft, and the mainshaft 1st gear rotates.

2. Power is transmitted to the countershaft 1st gear, and drives the countershaft via the one-way clutch.

3. Power is transmitted to the final drive gear and drives the final driven gear.

   NOTE:
   In [D4] or [D3] position, hydraulic pressure is not applied to the 1st-hold clutch.

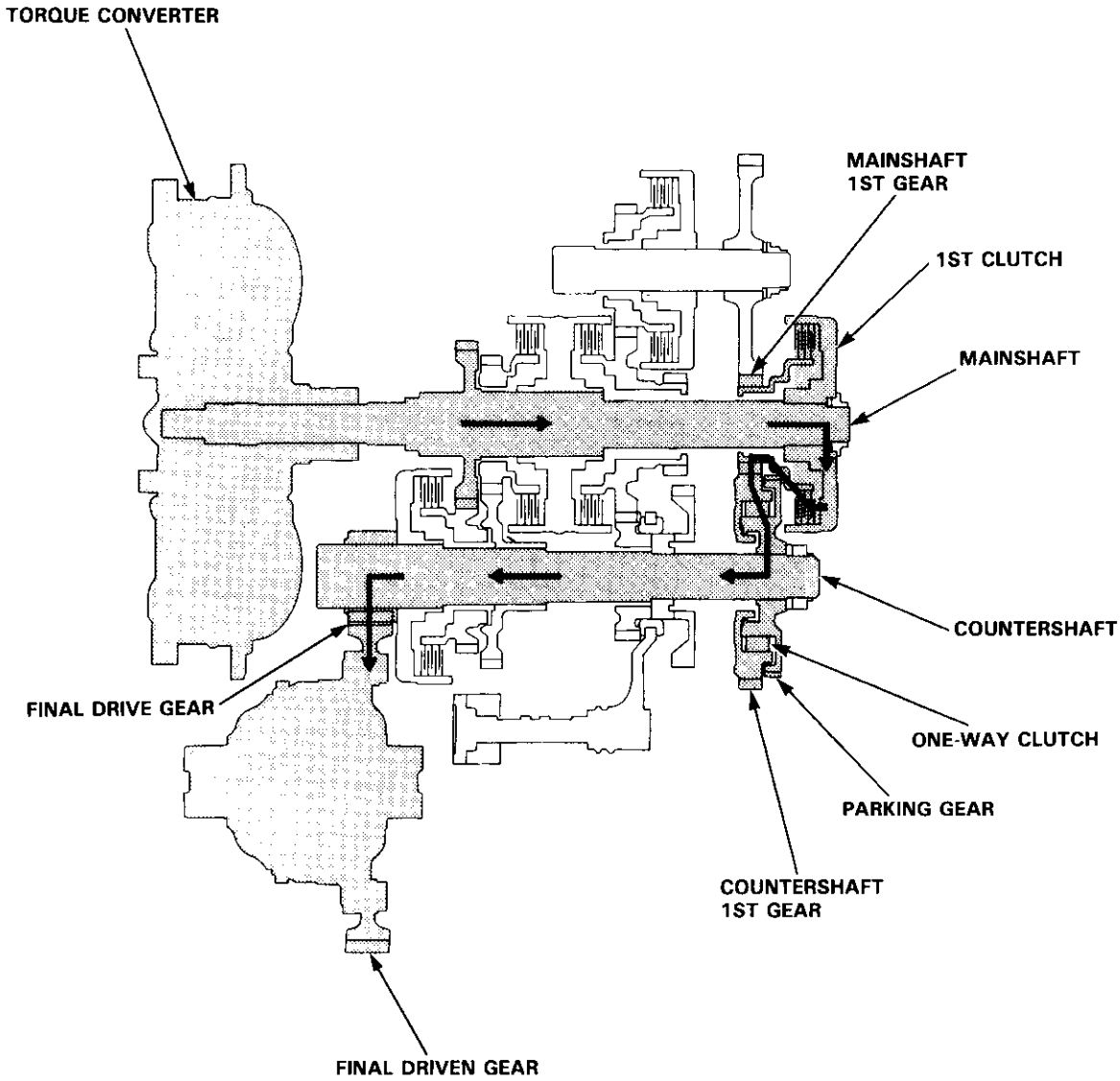

(cont'd)

Power Flow (cont'd)

D4 or D3 Position, 2nd speed

1. Hydraulic pressure is applied to the 2nd clutch, which rotates together with the mainshaft, and the mainshaft 2nd gear rotates.

2. Power is transmitted to the countershaft 2nd gear, and drives the countershaft.

3. Power is transmitted to the final drive gear and drives the final driven gear.

   NOTE:
   In D4 or D3 position, 2nd speed, hydraulic pressure is also applied to the 1st clutch, but since the rotation speed of 2nd gear exceeds that of 1st gear, power from 1st gear is cut off at the one-way clutch.

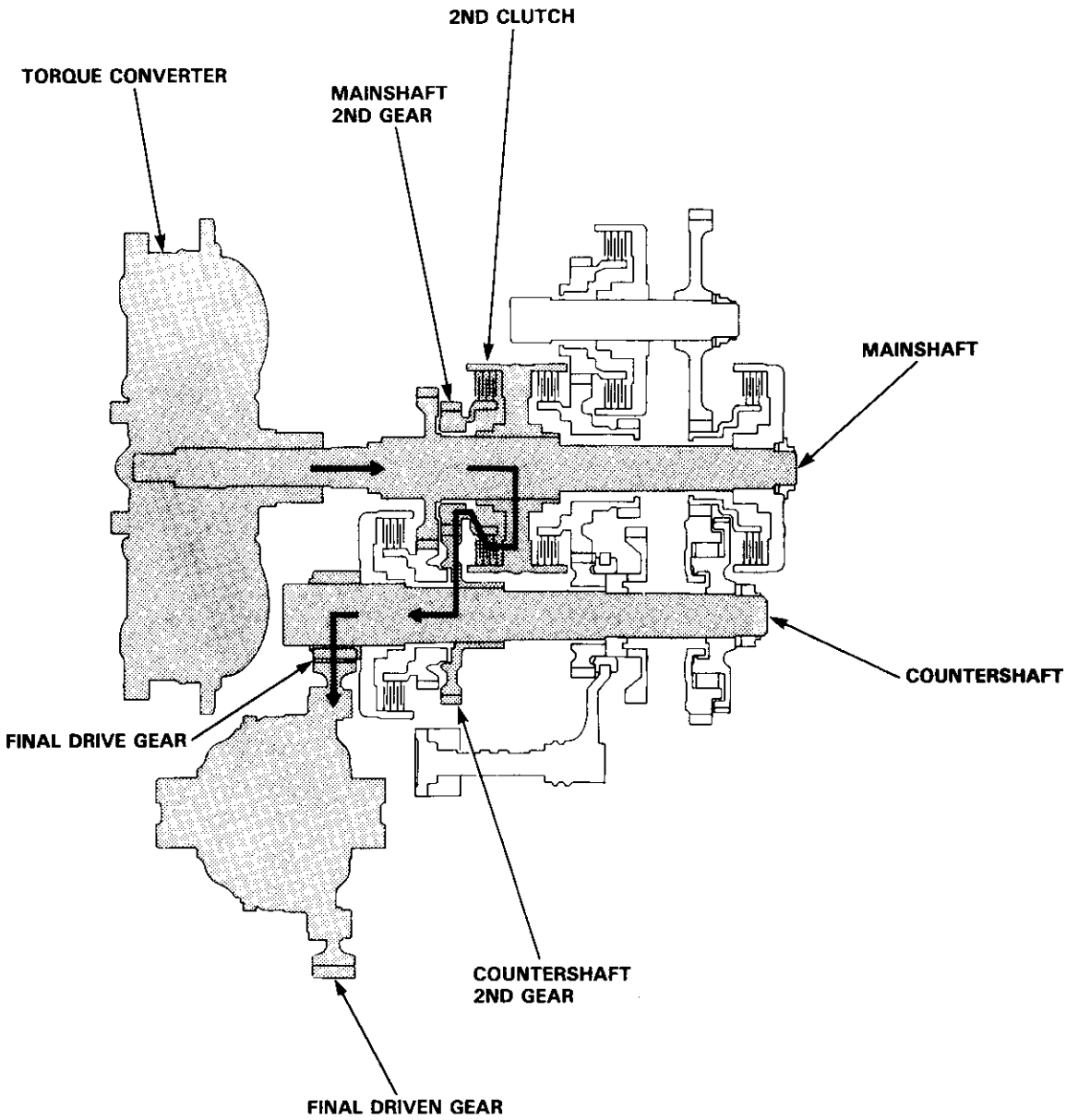

$\boxed{D_4}$ or $\boxed{D_3}$ Position, 3rd speed

1. Hydraulic pressure is applied to the 3rd clutch. Power from the mainshaft 3rd gear is transmitted to the countershaft 3rd gear.

2. Power is transmitted to the final drive gear and drives the final driven gear.

   NOTE:
   In $\boxed{D_4}$ or $\boxed{D_3}$ position, 3rd speed, hydraulic pressure is also applied to the 1st clutch, but since the rotation speed of 3rd gear exceeds that of 1st gear, power from 1st gear is cut off at the one-way clutch.

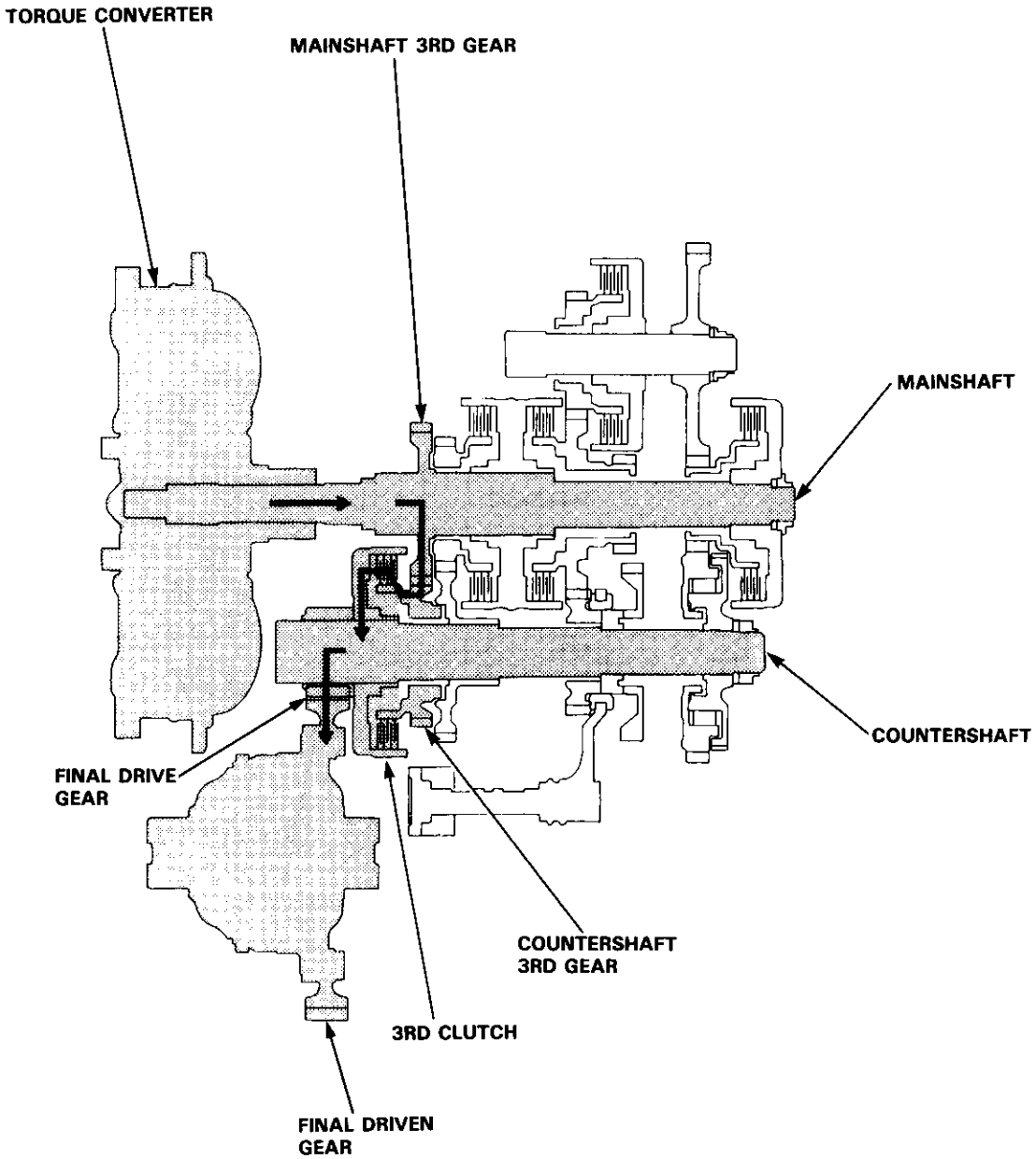

(cont'd)

Power Flow (cont'd)

D4 Position, 4th speed

1. Hydraulic pressure is applied to the 4th clutch, which rotates together with the mainshaft, and the mainshaft 4th gear rotates.
2. Power is transmitted to the countershaft 4th gear, and drives the countershaft.
3. Power is transmitted to the final drive gear and drives the final driven gear.

NOTE:
In D4 position, 4th speed, hydraulic pressure is also applied to the 1st clutch, but since the rotation speed of 4th gear exceeds that of 1st gear, power from 1st gear is cut off at the one-way clutch.

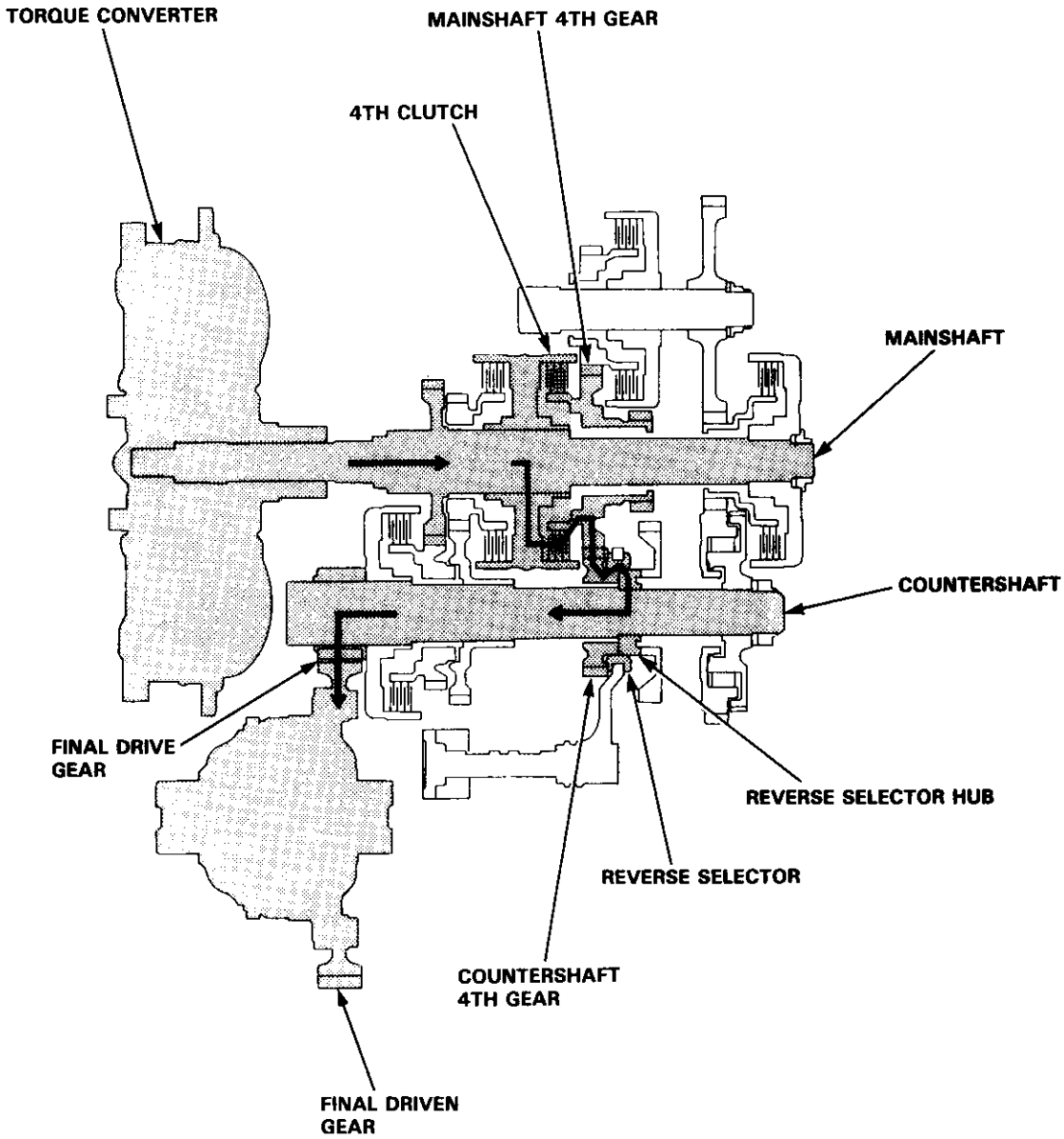

R Position

1. Hydraulic pressure is switched by the manual valve to the servo valve, which moves the reverse shift fork to the reverse position. The reverse shift fork engages with the reverse selector, reverse selector hub,and the countershaft reverse gear.

2. Hydraulic pressure is also applied to the 4th clutch. Power is transmitted from the mainshaft reverse gear via the reverse idler gear to the countershaft reverse gear.

3. Rotation direction of the countershaft reverse gear is changed via the reverse idler gear.

4. Power is transmitted to the final drive gear and drives the final driven gear.

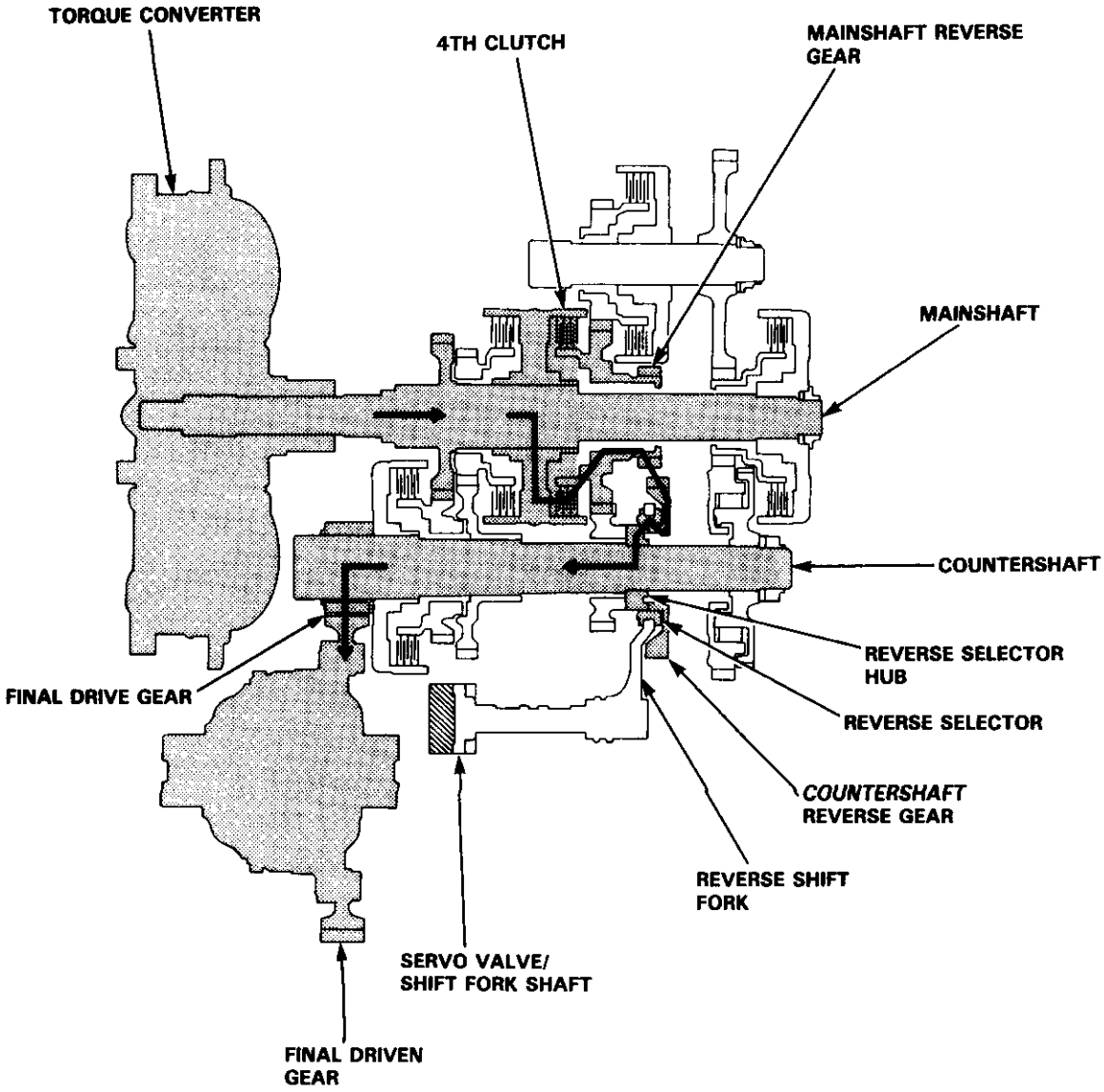

Description

Electronic Control System

Electronic Control System

The electronic control system consists of the Transmission Control Module (TCM), sensors, and 4 solenoid valves. Shifting and lock-up are electronically controlled for comfortable driving under all conditions.

The TCM is located below the dashboard, behind the left side kick panel on the driver's side.

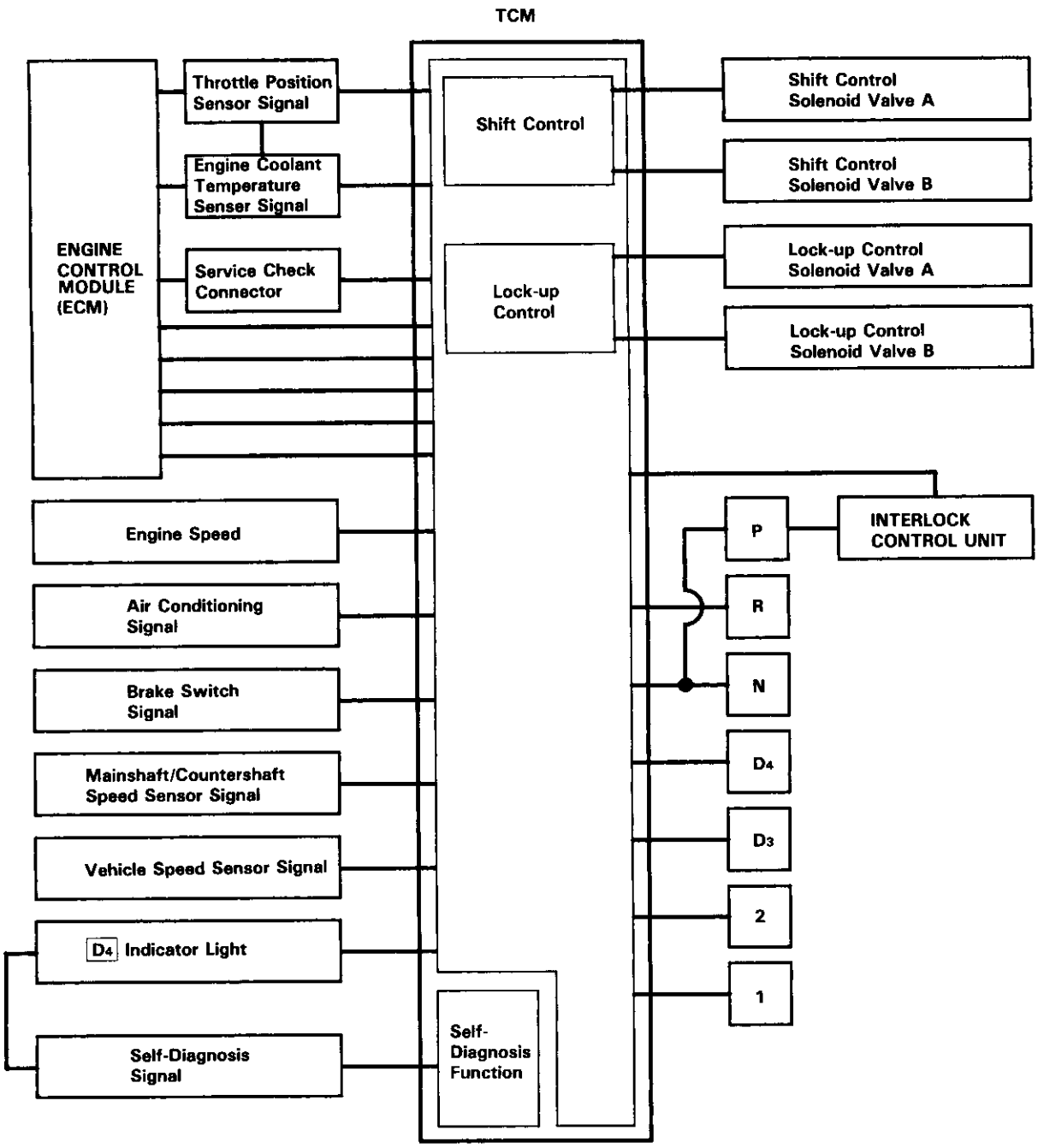

Lock-up Control
From sensor input signals, the TCM determines whether to turn the lock-up ON or OFF and activates lock-up control solenoid valve A and/or B accordingly.
The combination of driving signals to lock-up control solenoid valves A and B is shown in the table below.

Lock-up control Solenoid valve / Lock-up condition	A	B
Lock-up OFF	OFF	OFF
Lock-up, slight	ON	OFF
Lock-up, half	ON	ON
Lock-up, full	ON	ON
Lock-up during deceleration	ON	Duty operation OFF↔ON

Shift Control
The TCM instantaneously determines which gear should be selected by various signals sent from sensors, and actuates the shift control solenoid valves A and B control shifting. Also, a Grade Logic Control System has been adopted to control shifting in [D4] position while the vehicle is ascending or descending a slope, or reducing speed.

Shift control solenoid valve / Position (gear)		A	B
[D3], [D4]	(1st)	OFF	ON
	(2nd)	ON	ON
	(3rd)	ON	OFF
[D4]	(4th)	OFF	OFF
[2]	(2nd)	ON	ON
[1]	(1st)	ON	OFF
[R]	(Reverse)	ON	OFF

(cont'd)

Electronic Control System (cont'd)

- **GRADE LOGIC CONTROL SYSTEM**

How it works:
The TCM compares actual driving conditions with driving conditions memorized in the TCM, based on the input from the vehicle speed sensor, throttle position sensor, engine coolant temperature sensor, brake switch signal and select lever position signal, to control shifting while a vehicle is ascending or descending a slope, or reducing speed.

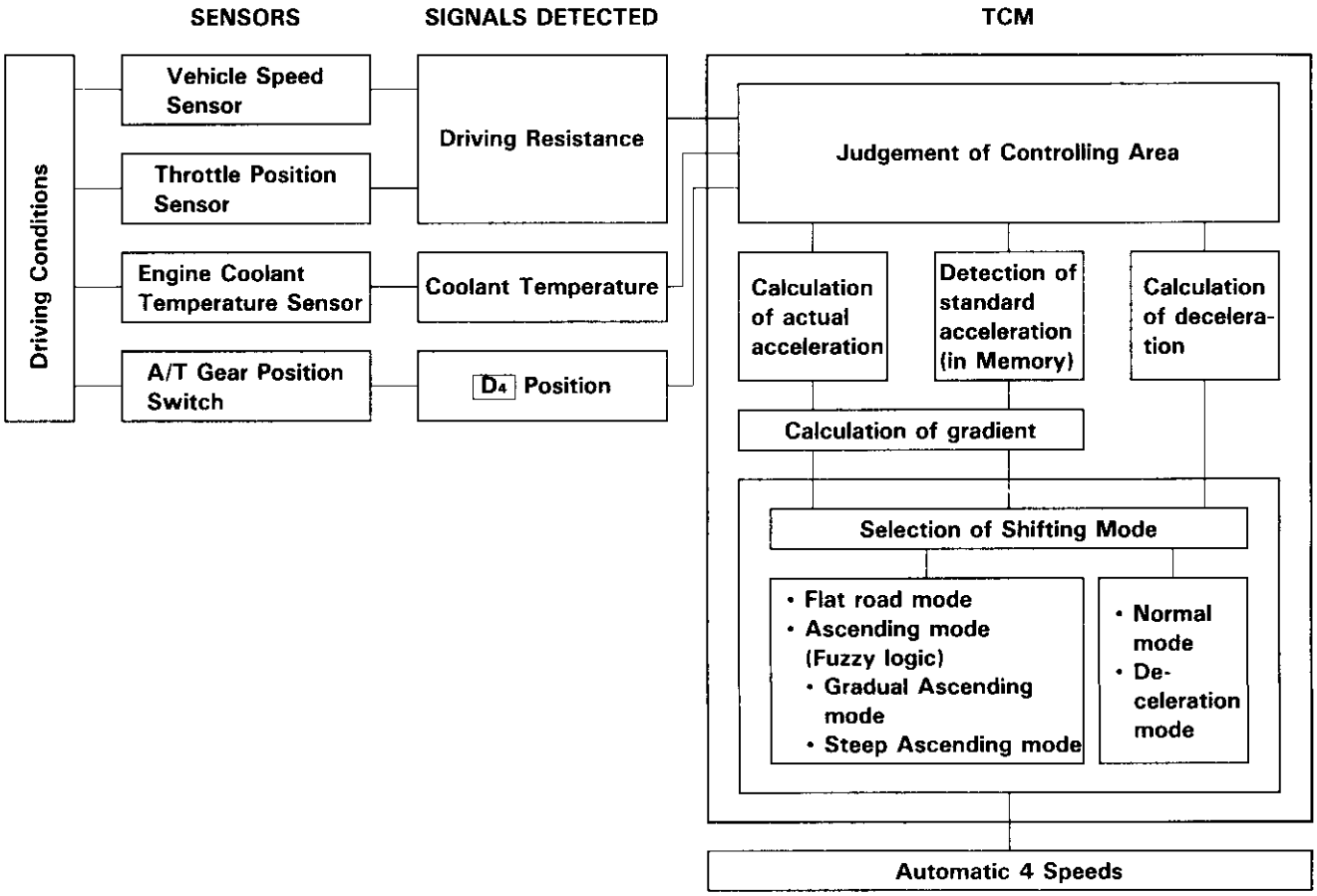

• **Ascending Control**

When the TCM determines that the vehicle is climbing a hill in $\boxed{D_4}$ position, the system extends the engagement area of 3rd gear to prevent the transmission from frequently shifting between 3rd and 4th gears, so the vehicle can run smooth and have more power when needed.

NOTE: Shift schedules between 3rd and 4th gear are stored in the TCM to enable the transmission to automatically select the most suitable gear according to the magnitude of a gradient by Fuzzy logic.

• **Descending Control**

When the TCM determines that the vehicle is going down a hill in $\boxed{D_4}$ position, the shift-up speed from 3rd to 4th gear when the throttle is closed becomes faster than the set speed for flat road driving to widen the 3rd gear driving area. This, in combination with engine brake from the deceleration lock-up, achieves smooth driving when the vehicle is descending.

There are two ascending modes with different 3rd gear driving areas according to the magnitude of a gradient stored in the TCM.

When the vehicle is in 4th gear, and you are decelerating on a gradual hill, or when you are applying the brakes on a steep hill, the transmission will downshift to 3rd gear. When you accelerate the transmission will then return to 4th gear.

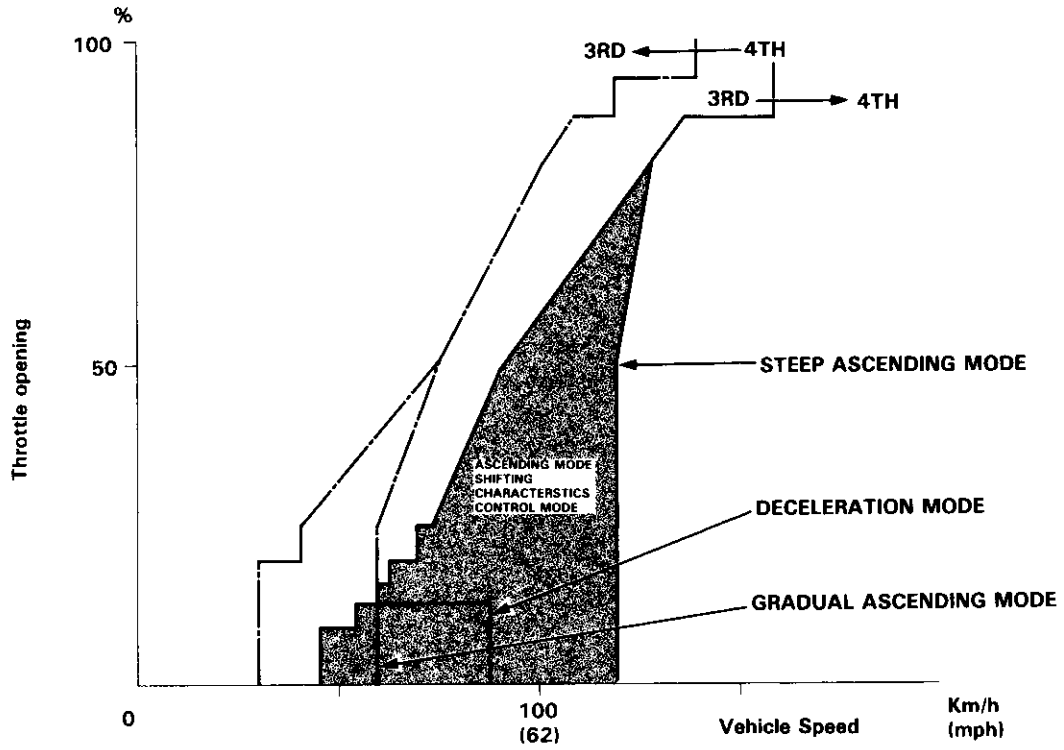

• **Deceleration Control**

When the vehicle goes around a corner, and needs to decelerate first and then accelerate, the TCM sets the data for deceleration control to reduce the number of times the transmission shifts to obtain smooth driving. When the vehicle is decelerating from speeds above 27 mph (43 km/h), the TCM shifts the transmission from 4th to 3rd earlier than normal to cope with upcoming acceleration to maintain smooth driving.

NOTE:
Fuzzy Logic: Fuzzy logic is a from at artificial intelligence that lets computers respond to changing conditions much like a human mind would.

Electronic Control System (cont'd)

Circuit Diagram and Terminal Location

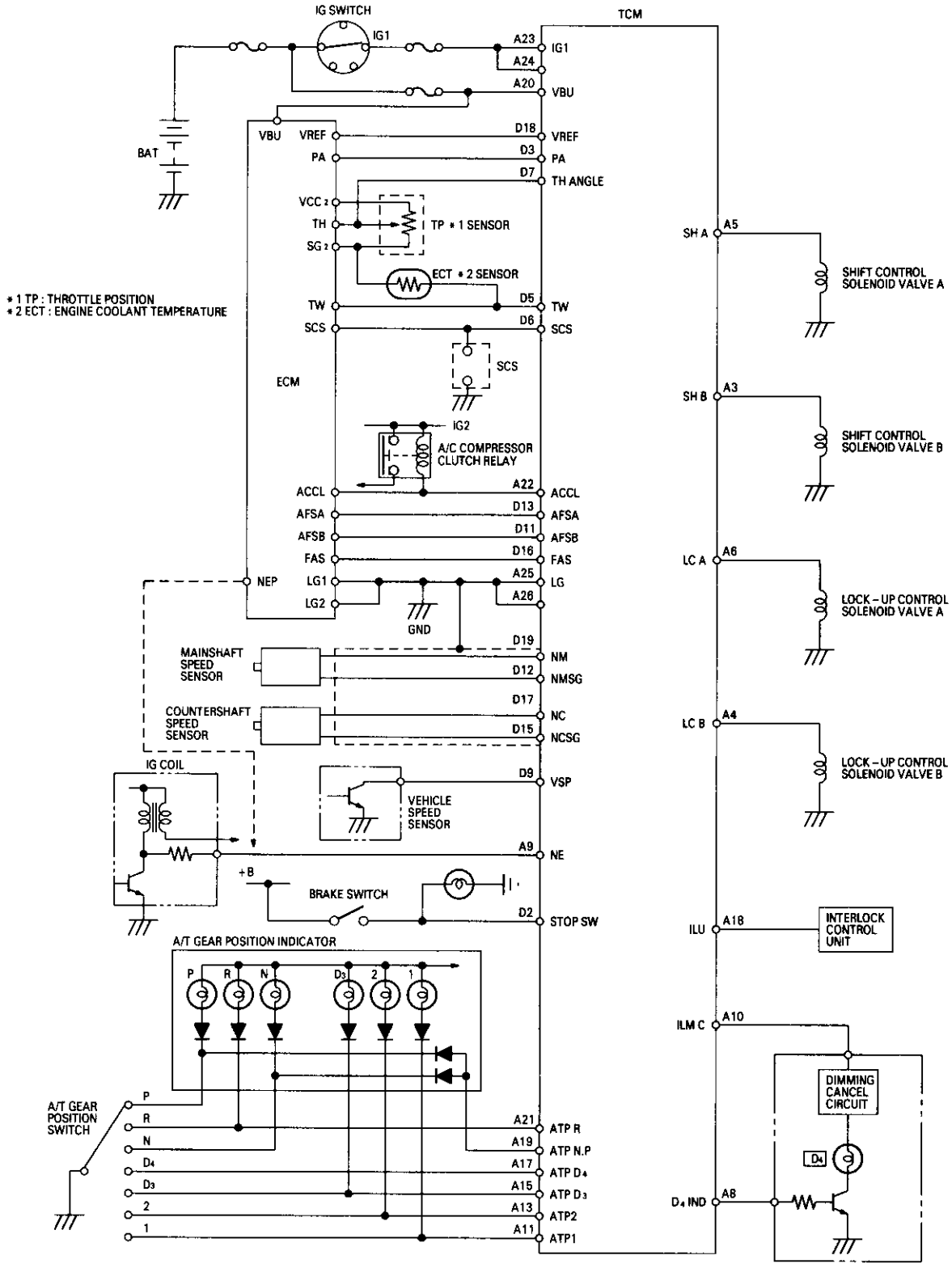

Hydraulic Control

The valve bodies include the main valve body, secondary valve body, regulator valve body, servo body and lock-up valve body.
The oil pump is driven by splines behind the torque converter which is attached to the engine. Oil flows through the regulator valve to maintain specified pressure through the main valve body to the manual valve, directing pressure to each of the clutches.

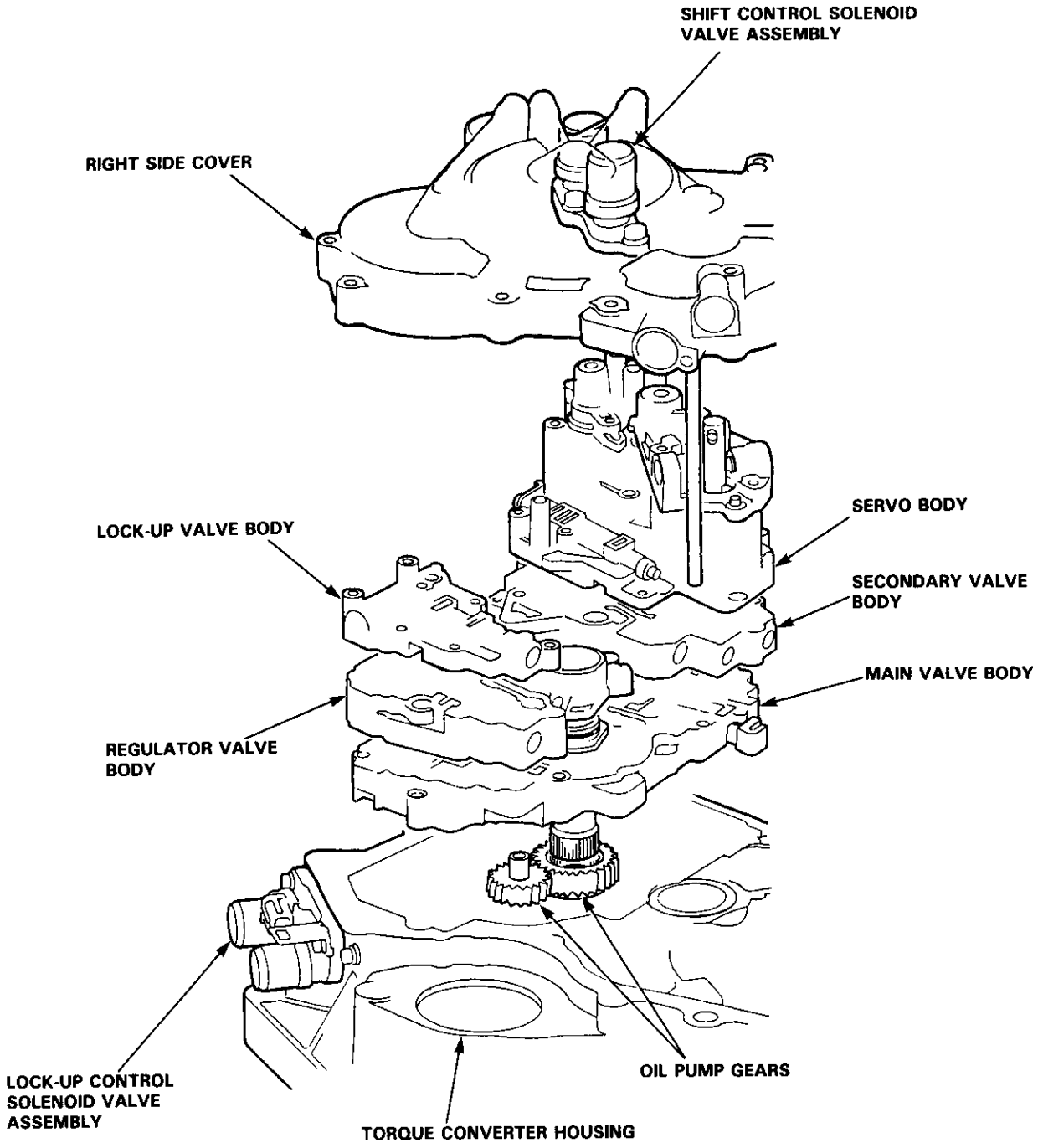

(cont'd)

Hydraulic Control (cont'd)

Regulator Valve Body

The regulator valve body is located on the main valve body. The regulator valve body consists of the regulator valve, torque converter check valve, cooler check valve, and lock-up control valve.

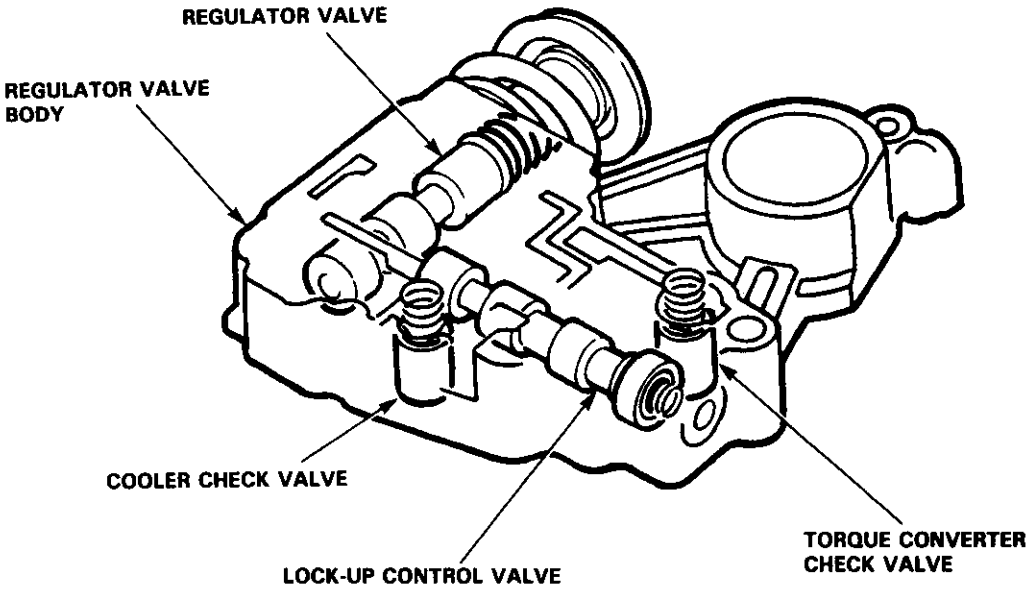

Lock-up Valve Body

The lock-up valve body with the lock-up shift valve and lock-up timing B valve is located on the regulator valve body.

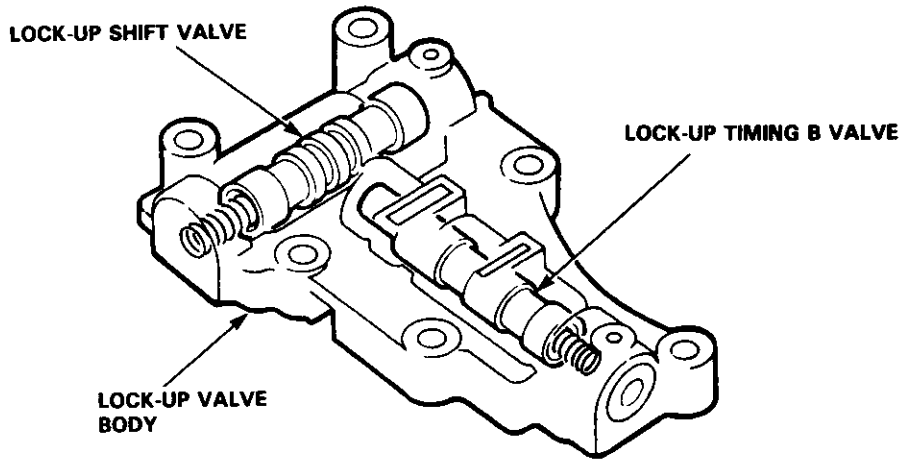

Regulator Valve

The regulator valve maintains a constant hydraulic pressure from the oil pump to the hydraulic control system, while also furnishing oil to the lubricating system and torque converter.

Oil flows through B and B'. The oil which enters through B flows through the valve orifice to A, pushing the regulator valve to the right. According to the level of hydraulic pressure through B, the position of the valve changes, and the amount of the oil through D from B' thus changes. This operation is continued, thus maintaining the line pressure.

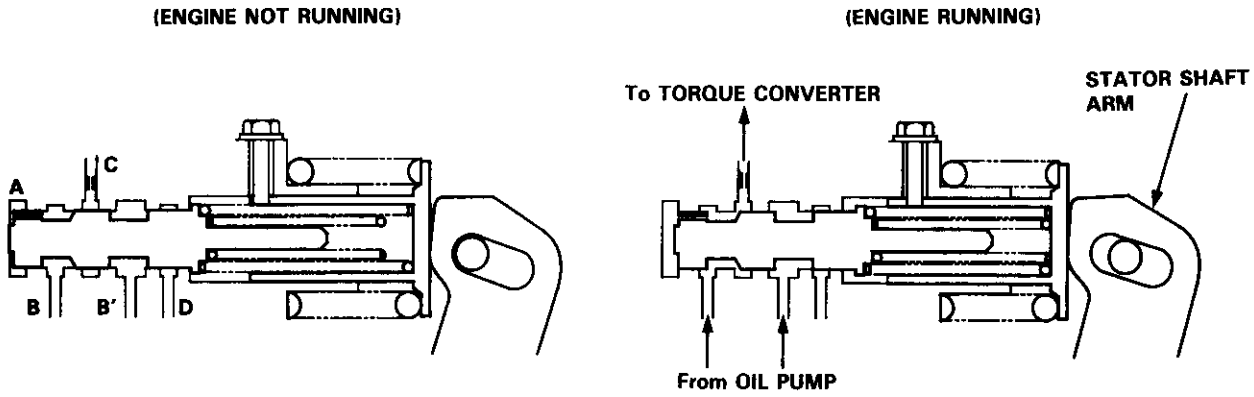

Stator Reaction Hydraulic Pressure Control

Hydraulic pressure increase, according to torque, is performed by the regulator valve using stator torque reaction. The stator shaft is splined to the stator and its arm end contacts the regulator spring cap. When the car is accelerating or climbing (Torque Converter Range), stator torque reaction acts on the stator shaft and the stator shaft arm pushes the regulator spring cap in this → direction in proportion to the reaction. The spring compresses and the regulator valve moves to increase the regulated control pressure or line pressure. Line pressure is maximum when the stator reaction is maximum.

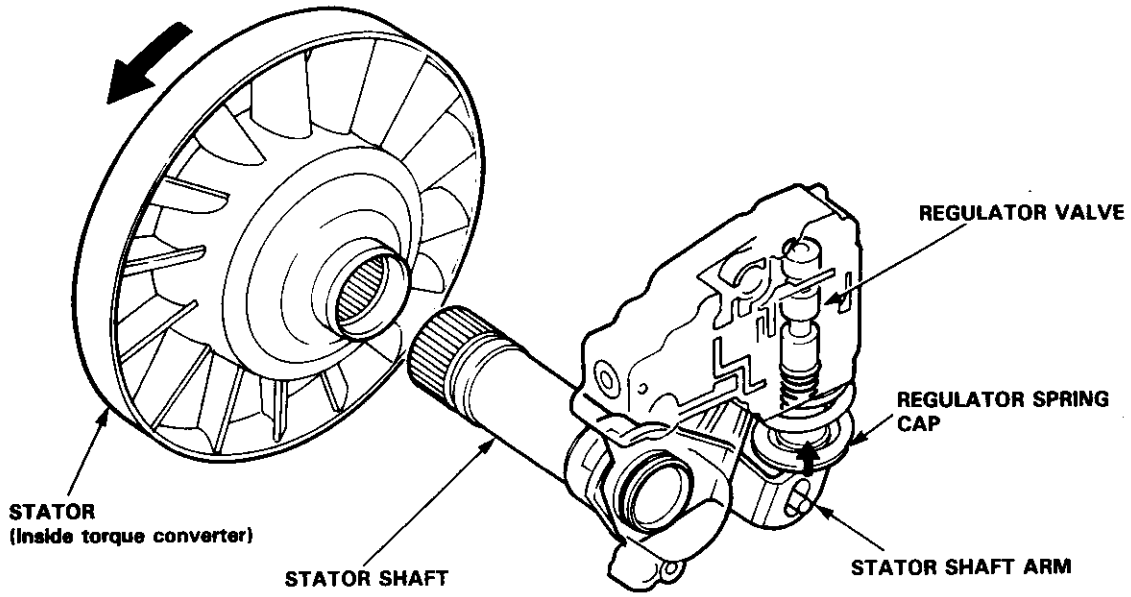

(cont'd)

Hydraulic Control (cont'd)

Main Valve Body

The manual valve, 1-2 shift valve, 2-3 shift valve, 4th exhaust valve, CPC valve, and relief valve are all assembled in the main valve body.

The primary function of this valve body is switching oil passages on and off and controlling the hydraulic pressure going to the hydraulic control system.

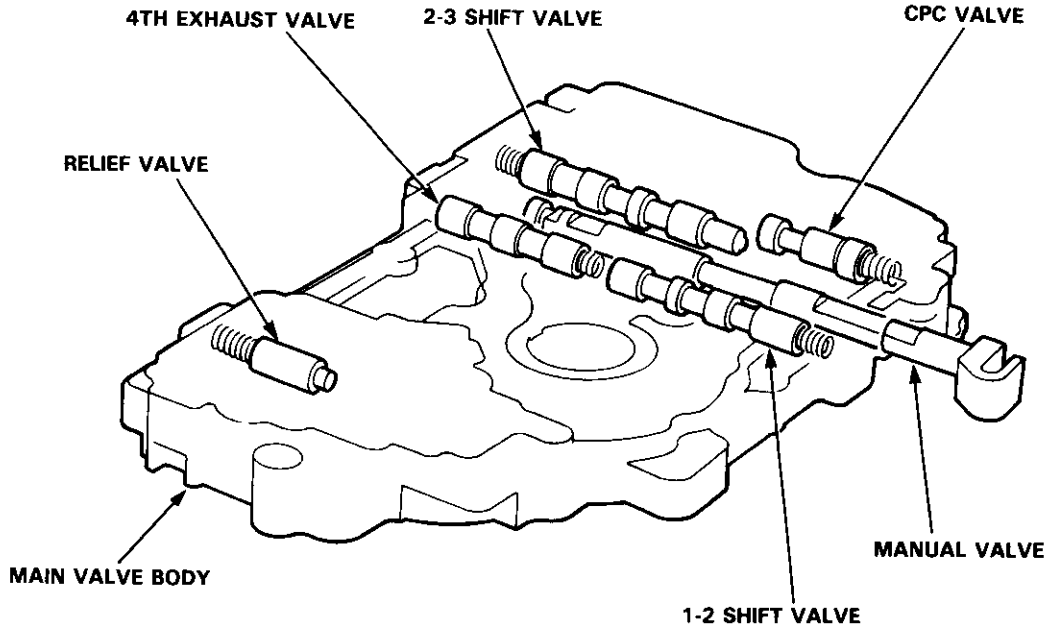

Secondary Valve Body

The secondary valve body is located on the main valve body. The 3-2 kick-down valve, 4-3 kick-down valve, 2-3 orifice control valve, orifice control valve, 3-4 shift valve, modulator valve, and servo control valve are assembled in the secondary valve body.

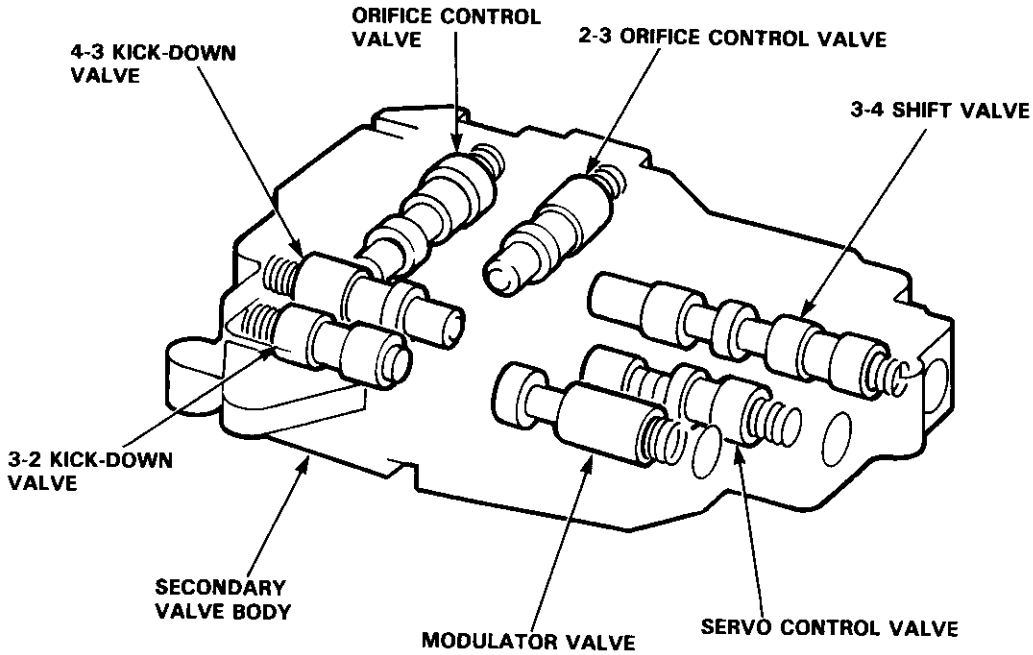

Servo Body
The servo body is located on the secondary valve body.
The servo valve is integrated with the shift fork shaft, throttle valve B, and accumulator pistons, which are all assembled in the servo body.

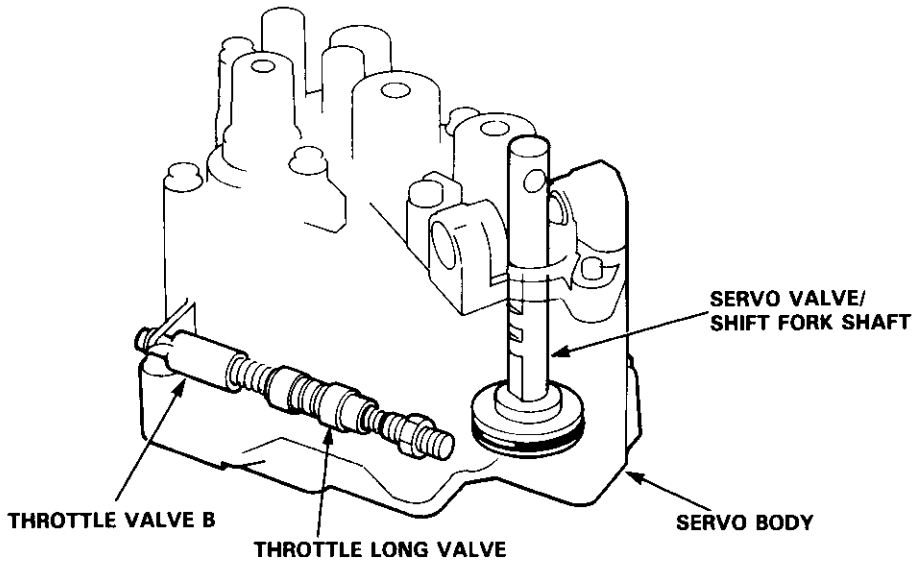

Accumulator Pistons
The accumulator pistons are assembled in the servo body and right side cover. The 1st-hold clutch accumulator piston is in the right side cover, and the 1st, 2nd 3rd, and 4th accumulator pistons are assembled in the servo body.

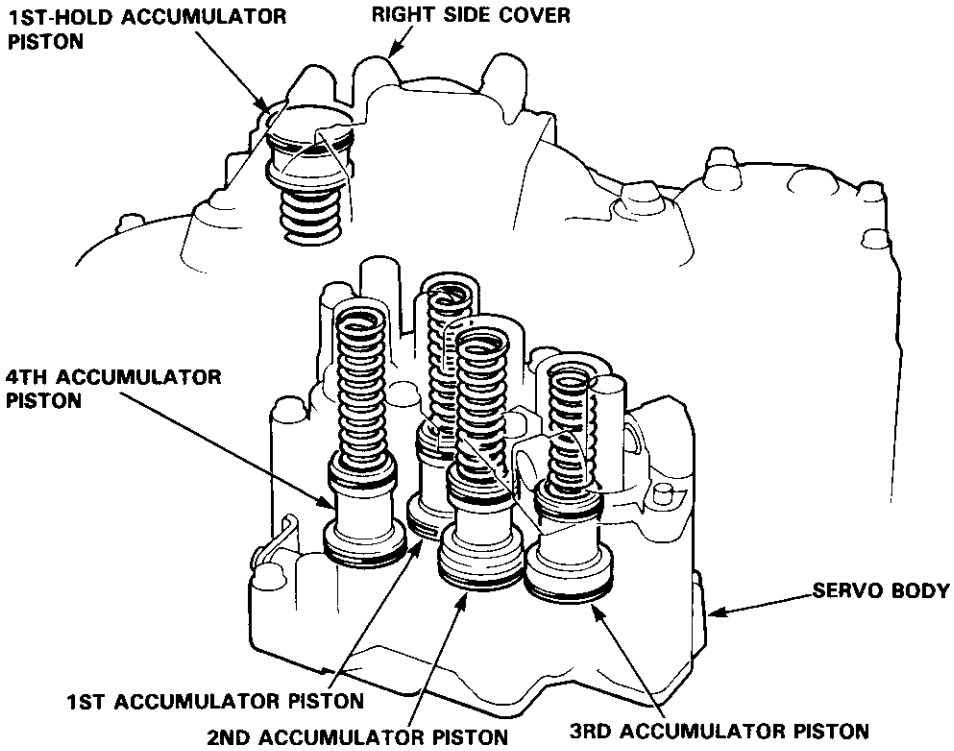

Description

Hydraulic Flow

General Chart of Hydraulic Pressure

Oil Pump → Regulator Valve → [Line Pressure / Torque Converter Pressure / Lubrication Pressure]

Distribution of Hydraulic Pressure

- Regulator Valve → [Line Pressure / Torque Converter Pressure / Lubrication Pressure]
- Manual Valve → To Select Line Pressure
- Modulator Valve → Modulator Pressure
- [1-2 Shift Valve / 2-3 Shift Valve / 3-4 Shift Vlave] → Clutch Pressure
- Throttle Valve B → Throttle B Pressure

NO.	DESCRIPTION OF PRESSURE	NO.	DESCRIPTION OF PRESSURE	NO.	DESCRIPTION OF PRESSURE
1	LINE	6C	MODULATOR (LOCK-UP CONTROL SOLENOID VALVE A)	55	THROTTLE B
2	LINE	6D	MODULATOR (LOCK-UP CONTROL SOLENOID VALVE B)	56	THROTTLE B
3	LINE	9	LINE	57	THROTTLE B
3′	LINE	10	1ST CLUTCH	58	THROTTLE B
3″	LINE	15	1ST-HOLD CLUTCH	90	TORQUE CONVERTER
4	LINE	16	1ST-HOLD CLUTCH	91	TORQUE CONVERTER
4′	LINE	18	LINE	92	TORQUE CONVERTER
5	LINE	20	2ND CLUTCH	93	OIL COOLER
5′	LINE	21	2ND CLUTCH	94	TORQUE CONVERTER
5″	LINE	25	LINE	95	LUBRICATION
6	MODULATOR	30	3RD CLUTCH	96	TORQUE CONVERTER
6′	MODULATOR	31	3RD CLUTCH	97	TORQUE CONVERTER
6A	MODULATOR (SHIFT CONTROL SOLENOID VALVE A)	40	4TH CLUTCH	99	SUCTION
6B	MODULATOR (SHIFT CONTROL SOLENOID VALVE B)	41	4TH CLUTCH	×	BLEED

N Position

As the engine turns, the oil pump also starts to operate. Automatic transmission fluid (ATF) is drawn from (99) and discharged into (1). Then, ATF pressure is controlled by the regulator valve and becomes line pressure (1). The torque converter inlet pressure (92) enters (94) of torque converter through the orifice and discharges into (90).
The torque converter check valve prevents the torque converter pressure from rising.
Under this condition, the hydraulic pressure is not applied to the clutches.

NOTE:
- When used, "left" or "right" indicates direction on the flowchart.
- SOL-Ⓐ: Shift Control Solenoid Valve A
- SOL-Ⓑ: Shift Control Solenoid Valve B
- SOL-Ⓒ: Lock-up Control Solenoid Valve A
- SOL-Ⓓ: Lock-up Control Solenoid Valve B

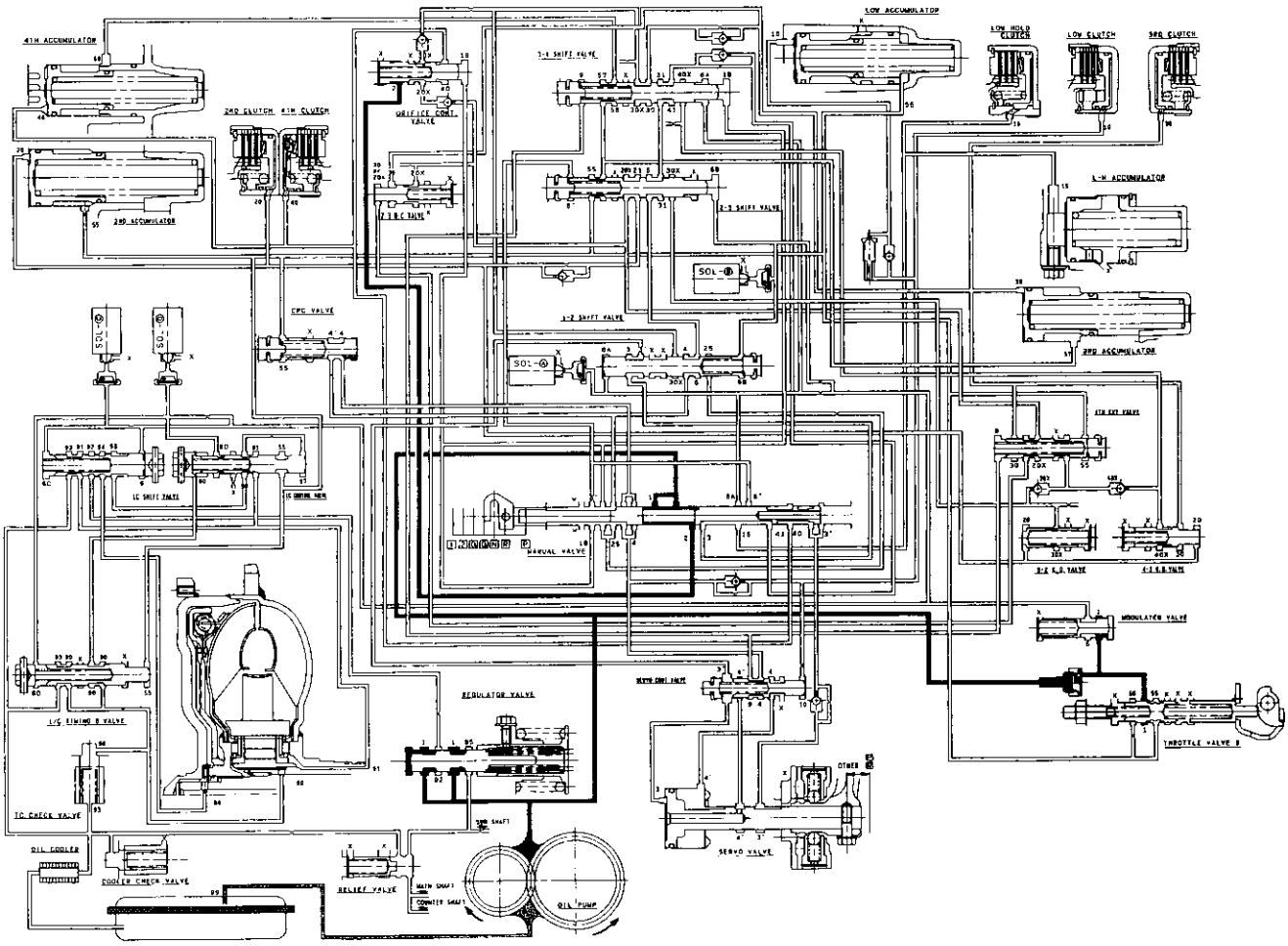

(cont'd)

Description

Hydraulic Flow (cont'd)

1 Position

The line pressure (1) becomes line pressure (4) at the manual valve and passes to the 1st clutch and 1st accumulator. Then line pressure (4) flows through the 1st-hold clutch and 1st-hold accumulator.

Fluid flows by way of:

— Line Pressure (4) → 1-2 Shift Valve → 2-3 Shift Valve — 3rd Clutch Pressure (31) → 3-4 Shift Valve — 4th Clutch Pressure (41) → Manual Valve — 1st-hold Clutch Pressure (15) → 1st-hold Clutch

The modulator pressure (6) is supplied to the 1-2 and 2-3 shift valves.
The line pressure (1) also flows to throttle valve B.

NOTE:

- When used, "left" or "right" indicates direction on the flowchart.
- SOL-Ⓐ : Shift Control Solenoid Valve A
- SOL-Ⓑ : Shift Control Solenoid Valve B
- SOL-Ⓒ : Lock-up Control Solenoid Valve A
- SOL-Ⓓ : Lock-up Control Solenoid Valve B

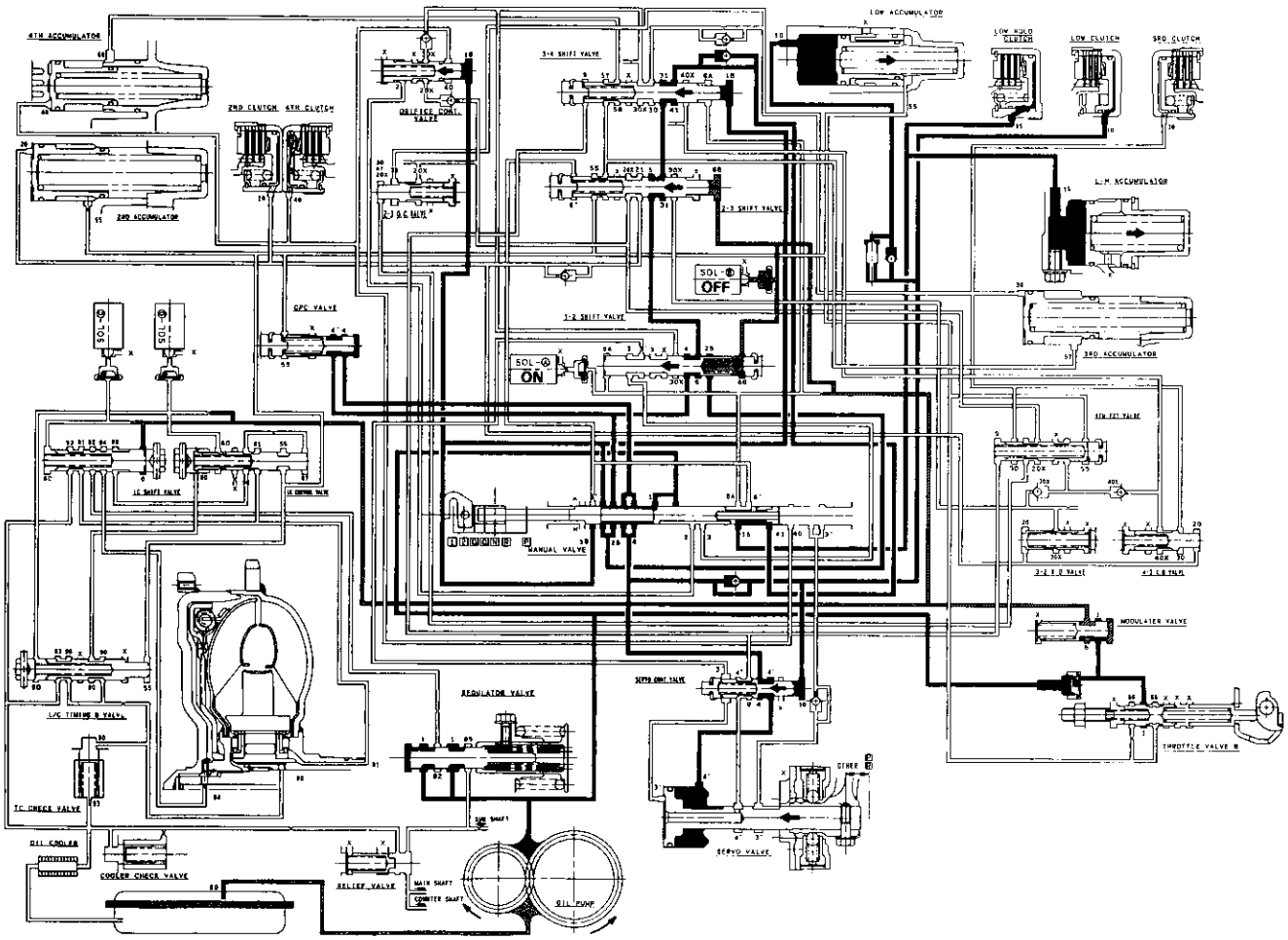

2 Position

The line pressure (1) becomes line pressure (4) as it passes through the manual valve. It then goes through line (20) to the 2nd clutch via the 1-2 and 2-3 shift valves. Also, line pressure (1) goes to the modulator valve through the filter and becomes the modulator pressure (6). Modulator pressure (6) is not supplied to the 1-2, 2-3 and 3-4 shift valves because the shift control solenoid valves A and B are turned on by the TCM.

NOTE:

- When used, "left" or "right" indicates direction on the flowchart.
- SOL-Ⓐ: Shift Control Solenoid Valve A
- SOL-Ⓑ: Shift Control Solenoid Valve B
- SOL-Ⓒ: Lock-up Control Solenoid Valve A
- SOL-Ⓓ: Lock-up Control Solenoid Valve B

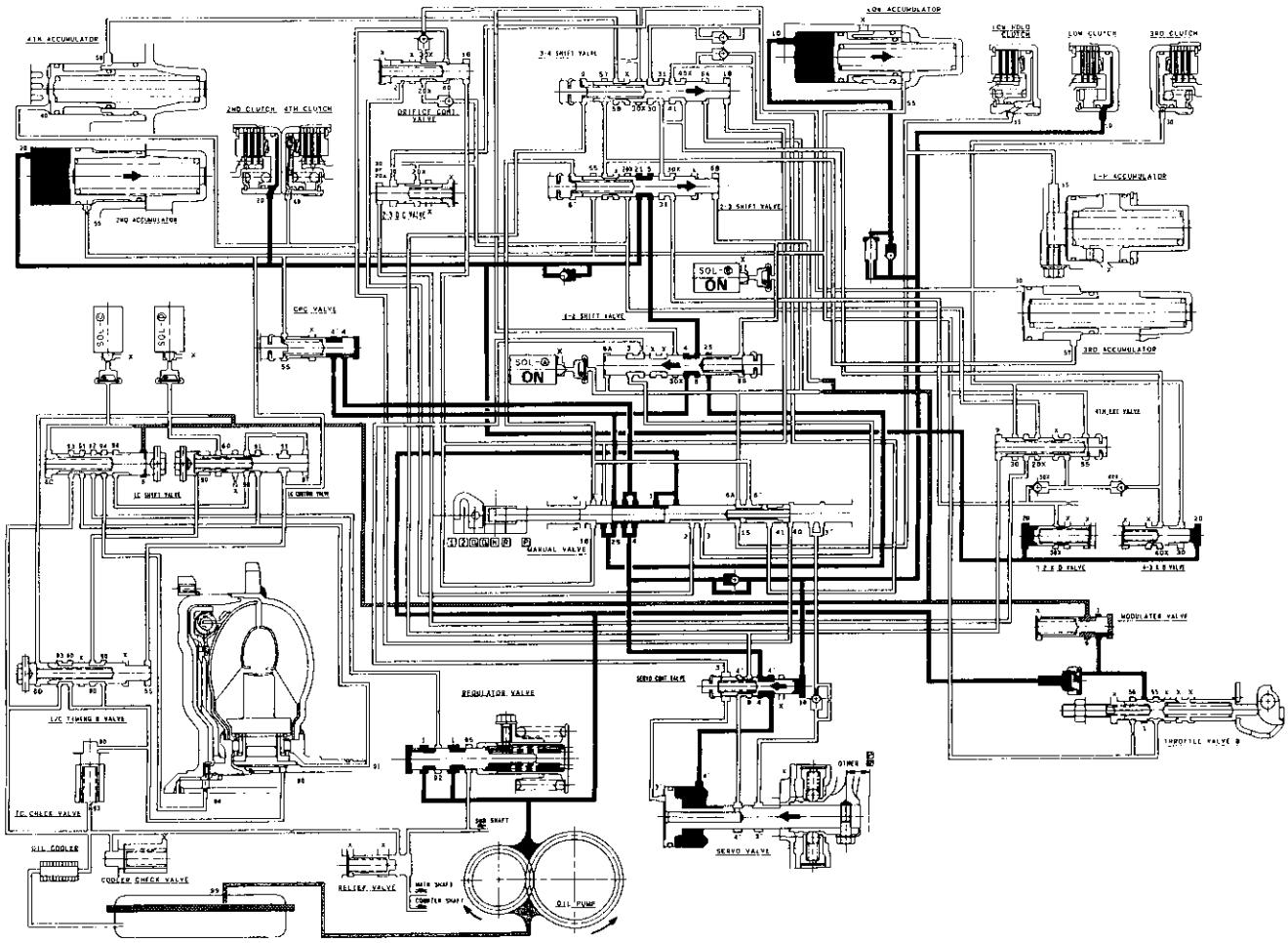

(cont'd)

Hydraulic Flow (cont'd)

D3 or D4 Position

1. **1st Speed**
   The flow of fluid throuth the torque converter circuit is the same as in N position.
   The line pressure (1) becomes line pressure (4) and it becomes the 1st clutch pressure (10). The 1st clutch pressure is applied to the 1st clutch and 1st accumulator; consequently, the vehicle will move as the engine power is transmitted.
   The line pressure (1) becomes the modulator pressure (6) by the modulator valve and travels to 1-2 and 3-4 shift valves.
   The 1-2 shift valve is moved to the right side because the shift control solenoid valve A is turned off and B is turned on by the TCM. This valve stops 2nd clutch pressure and power is not transmitted to the 2nd clutch.
   Line pressure (4) also flows to the servo valve and line pressure (1) also flows to throttle valve B.

   NOTE:
   - When used, "left" or "right" indicates direction on the flowchart.
   - SOL-Ⓐ: Shift Control Solenoid Valve A
   - SOL-Ⓑ: Shift Control Solenoid Valve B
   - SOL-Ⓒ: Lock-up Control Solenoid Valve A
   - SOL-Ⓓ: Lock-up Control Solenoid Valve B

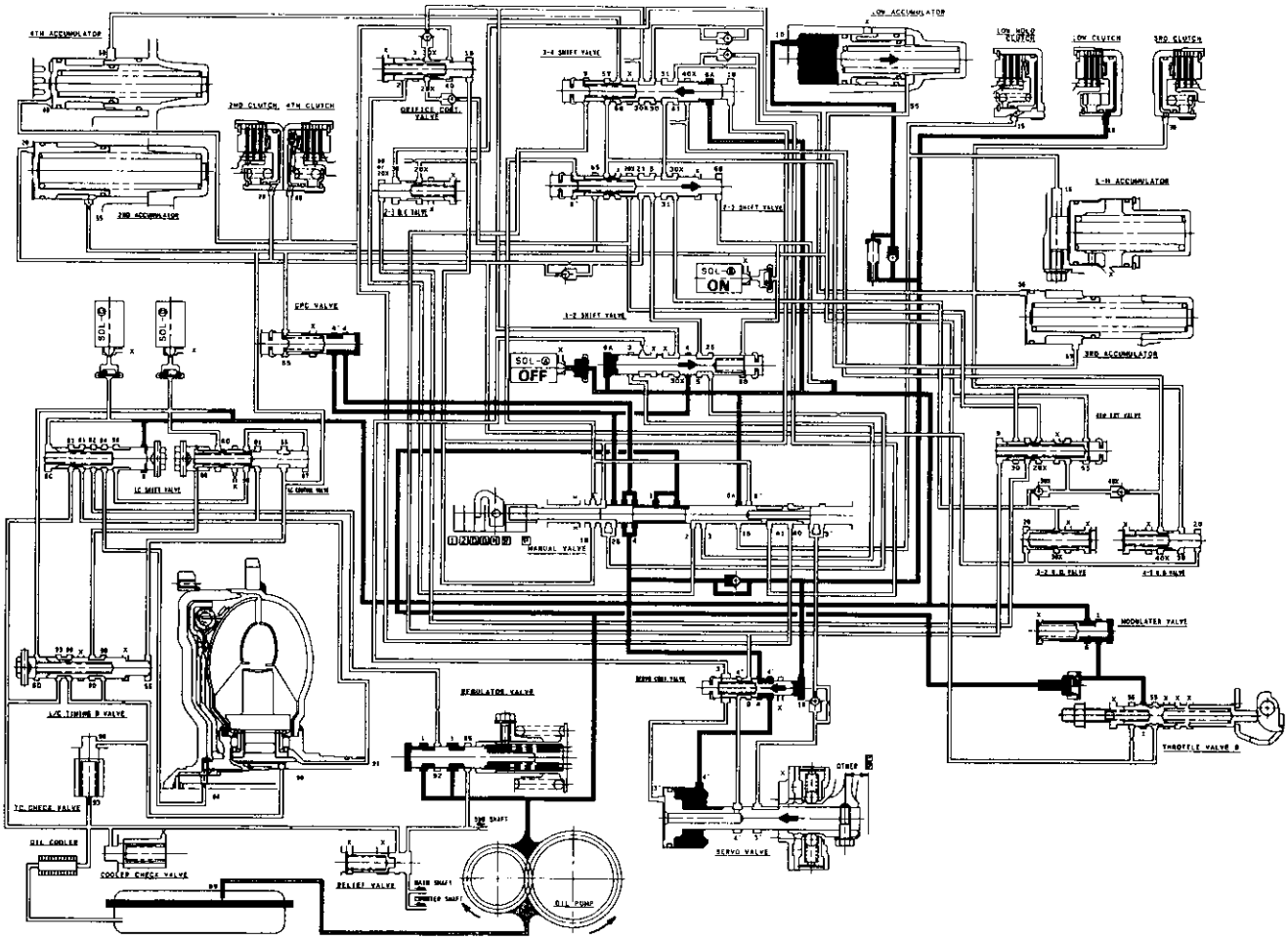

2. **2nd Speed**

The flow of fluid up the 1-2 shift valve is the same as in 1st speed. As the speed of the car reaches the prescribed value, the solenoid valve A is turned on by means of the TCM. As a result, the 1-2 shift valve is moved to the left and uncovers the port leading to the 2nd clutch; the 2nd clutch is engaged.

Fluid flows by way of:

— Line pressure (4) → 1-2 Shift Valve → 2-3 Shift Valve — 2nd Clutch Pressure (21) → 2nd Clutch

The hydraulic pressure also flows to the 1st clutch. However, no power is transmitted because of the one-way clutch.

NOTE:

- When used, "left" or "right" indicates direction on the flowchart.
- SOL-Ⓐ : Shift Control Solenoid Valve A
- SOL-Ⓑ : Shift Control Solenoid Valve B
- SOL-Ⓒ : Lock-up Control Solenoid Valve A
- SOL-Ⓓ : Lock-up Control Solenoid Valve B

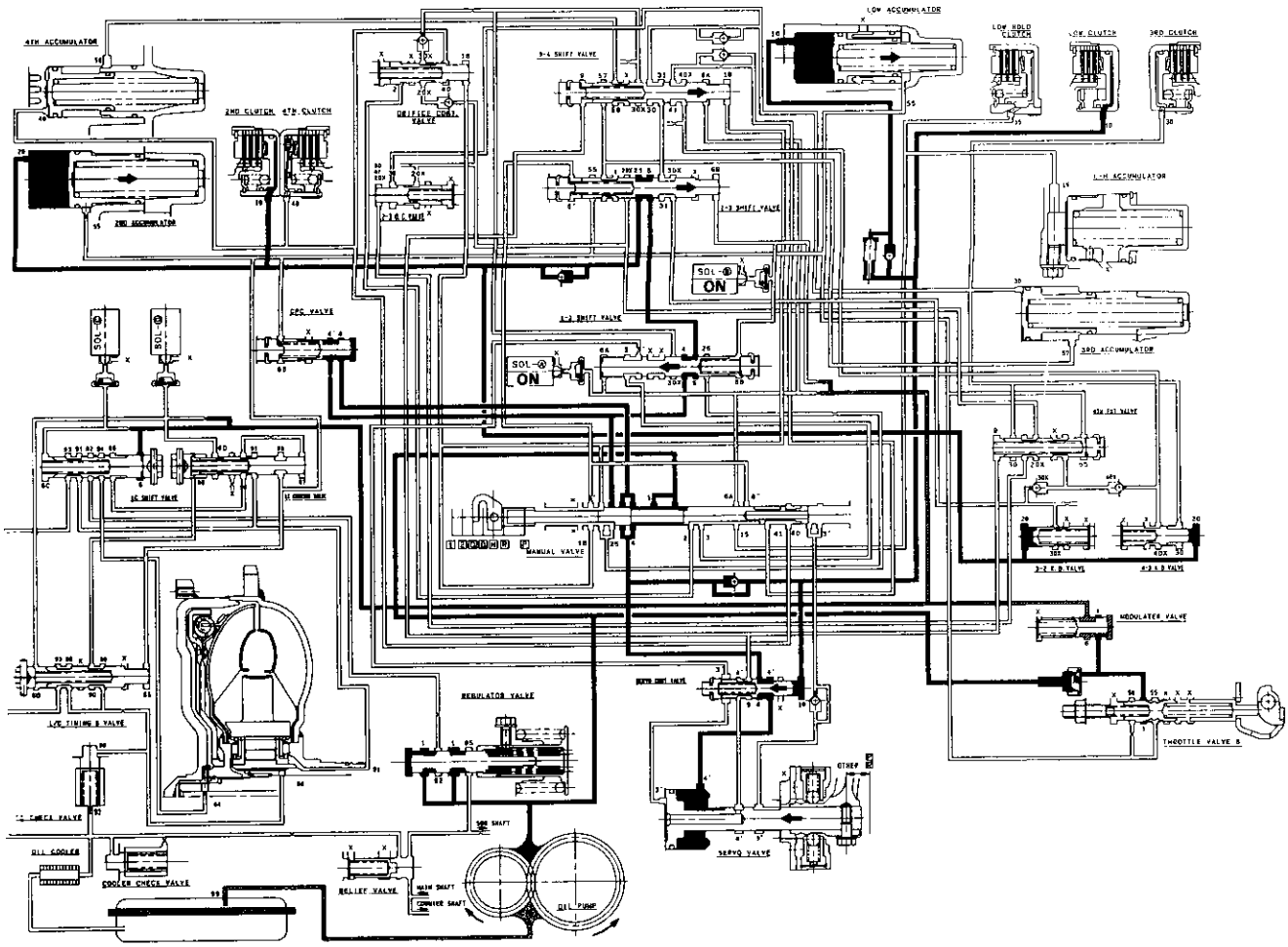

(cont'd)

Hydraulic Flow (cont'd)

3. **3rd Speed**
   The flow of fluid up to the 1-2 and 2-3 shift valves is the same as in 2nd speed. As the speed of the car reaches the prescribed value, the shift control solenoid valve B is turned off (shift control solenoid valve A remains on). The 2-3 shift valve is then moved to the left, uncovering the oil port leading to the 3rd clutch. Since the 3-4 shift valve is moved to the right to cover the oil port to the 4th clutch, the 3rd clutch is turned on.

   Fluid flows by way of:
   — Line Pressure (4) → 1-2 Shift Valve → 2-3 Shift Valve — 3rd Clutch Pressure (31) → 3-4 Shift Valve (not controlled) — 3rd Clutch Pressure (30) → 3rd Clutch

   The hydraulic pressure also flows to the 1st clutch. However, no power is transmitted because of the one-way clutch as in the 2nd speed.

   NOTE:
   - When used, "left" or "right" indicates direction on the flowchart.
   - SOL-Ⓐ: Shift Control Solenoid Valve A
   - SOL-Ⓑ: Shift Control Solenoid Valve B
   - SOL-Ⓒ: Lock-up Control Solenoid Valve A
   - SOL-Ⓓ: Lock-up Control Solenoid Valve B

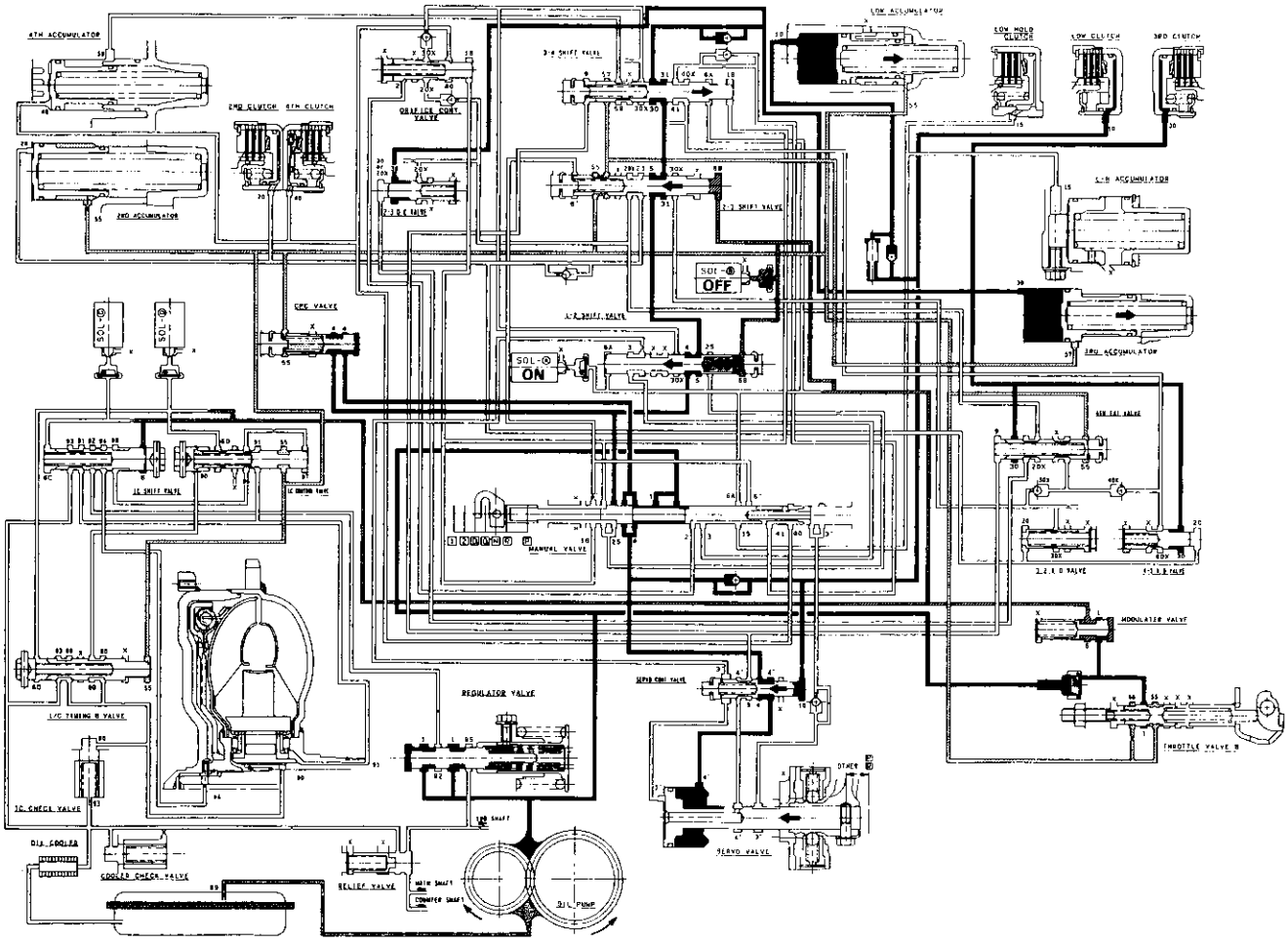

D4 Position

4. **4th Speed**

The flow of fluid up to the 1-2, 2-3 and 3-4 shift valves is the same as in 3rd speed. As the speed of the car reaches the prescribed value, the shift control solenoid valve A is turned off (shift control solenoid valve B remains off). As this takes place, 3-4 shift valve is moved to the left and uncovers the oil port leading to the 4th clutch. Since the 1-2 and 2-3 shift valves are kept on the left side, the fluid flows through the 4th clutch; the power is transmitted through the 4th clutch.

Fluid flows by way of:

— Line Pressure (4) → 1-2 Shift Valve → 2-3 Shift Valve — 3rd Clutch Pressure (31) → 3-4 Shift Valve — 4th Clutch pressure (41) → Manual Valve — 4th Clutch Pressure (40) → 4th Clutch

The hydraulic pressure also flows to the 1st clutch. However, no power is transmitted because of the one-way clutch as in 2nd and 3rd speed.

NOTE:

- When used, "left" or "right" indicates direction on the flowchart.
- SOL-Ⓐ : Shift Control Solenoid Valve A
- SOL-Ⓑ: Shift Control Solenoid Valve B
- SOL-Ⓒ: Lock-up Control Solenoid Valve A
- SOL-Ⓓ : Lock-up Control Solenoid Valve B

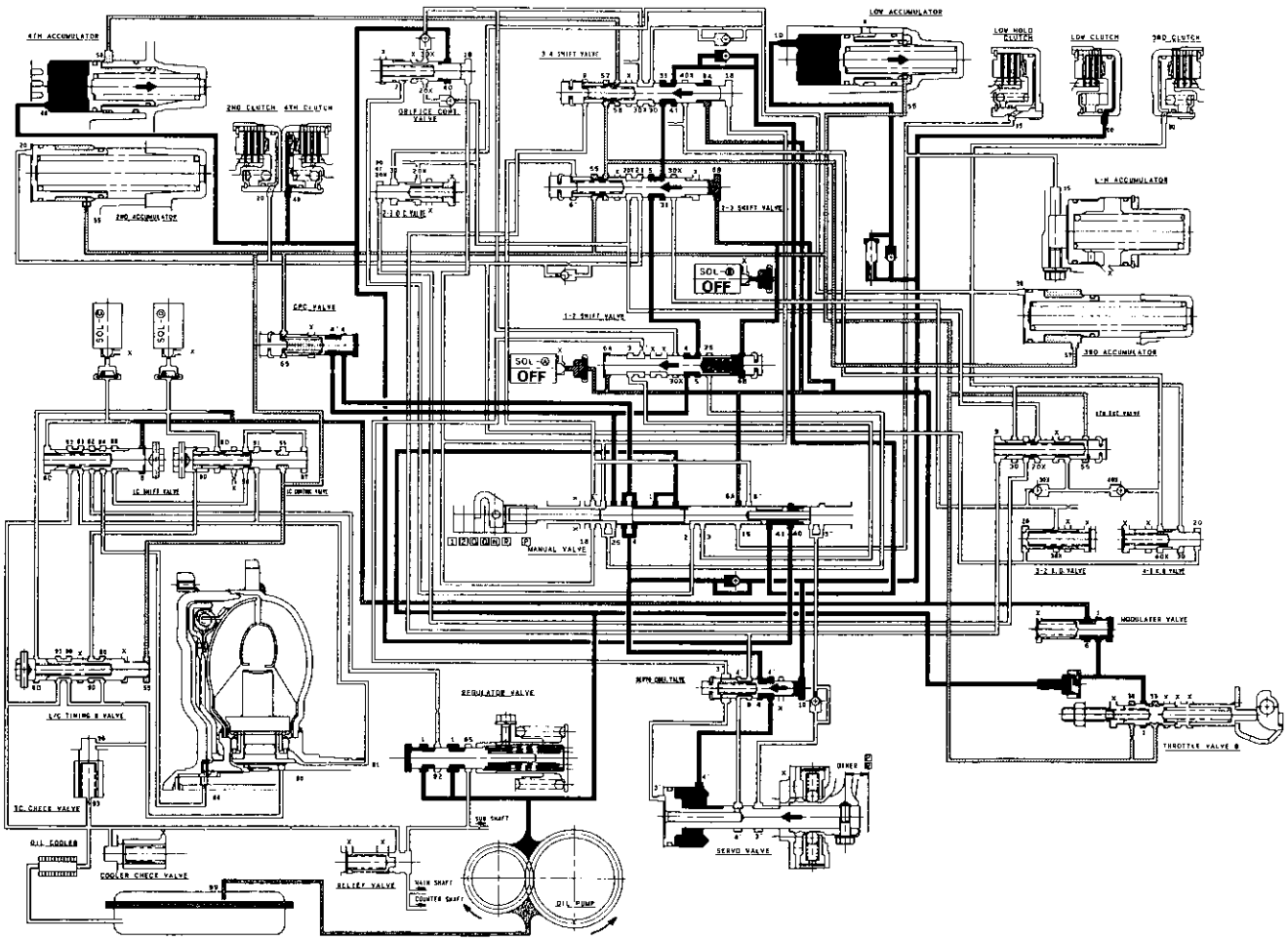

(cont'd)

Hydraulic Flow (cont'd)

R Position

The flow of fluid through the torque converter circuit is the same as in N position. The fluid (1) from the oil pump flows through the manual valve and becomes line pressure (3). It then flows through the 1-2 shift valve to the servo valve via the servo control valve, causing the shift fork shaft to be moved in the reverse direction.
Under this condition, the shift control solenoid valve A is turned on whereas the valve B is turned off as in 3rd speed in D_4 or D_3 position. As a result, the 1-2 shift valve is also moved to the left. The fluid (3') will flow through the servo valve and manual valve to the 4th clutch; power is transmitted through the 4th clutch.

Reverse Inhibitor Control

When the R position is selected while the vehicle is moving forward at a speed over 6 mph (10 km/h), the TCM outputs 1st signal (A: OFF, B: ON), and the 1-2 shift valve is moved to the right side. The line pressure (3) is intercepted by the 1-2 shift valve; consequently, power is not transmitted as the 4th clutch and servo valve are not operated.

NOTE:
- When used, "left" or "right" indicates direction on the flowchart.
- SOL-Ⓐ: Shift Control Solenoid Valve A
- SOL-Ⓑ: Shift Control Solenoid Valve B
- SOL-Ⓒ: Lock-up Control Solenoid Valve A
- SOL-Ⓓ: Lock-up Control Solenoid Valve B

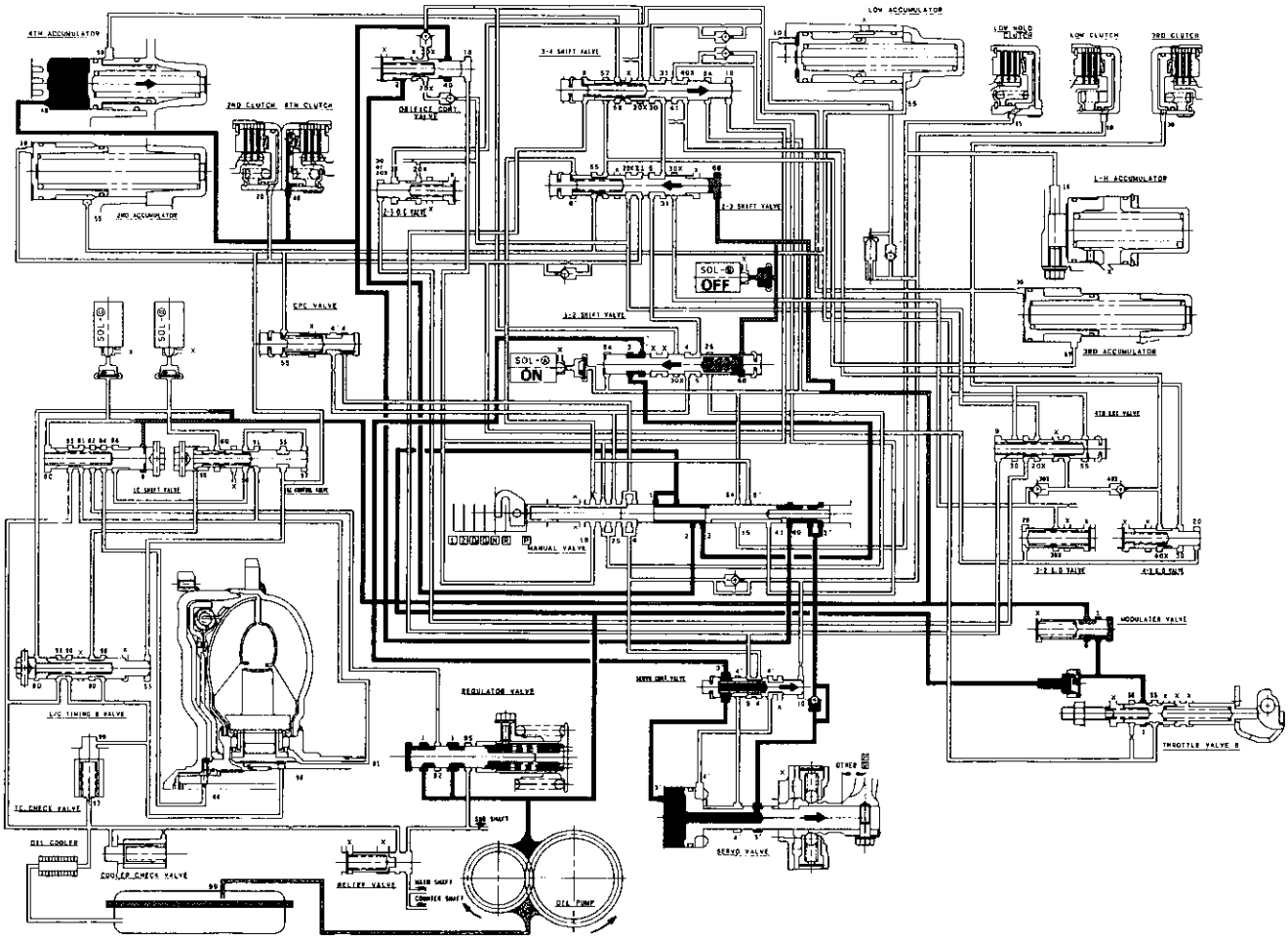

P Position

The flow of fluid through the torque converter circuit is the same as in N position. The line pressure (1) becomes line pressure (3) as it passes through the manual valve. Then line pressure (3) flows through the 1-2 shift valve to the servo valve via the servo control valve, causing the shift fork shaft to be moved to the reverse position as in R position. However, the hydraulic pressure is not supplied to the clutches. Power is not transmitted.

NOTE:

- When used, "left" or "right" indicates direction on the flowchart.
- SOL-Ⓐ : Shift Control Solenoid Valve A
- SOL-Ⓑ : Shift Control Solenoid Valve B
- SOL-Ⓒ : Lock-up Control Solenoid Valve A
- SOL-Ⓓ : Lock-up Control Solenoid Valve B

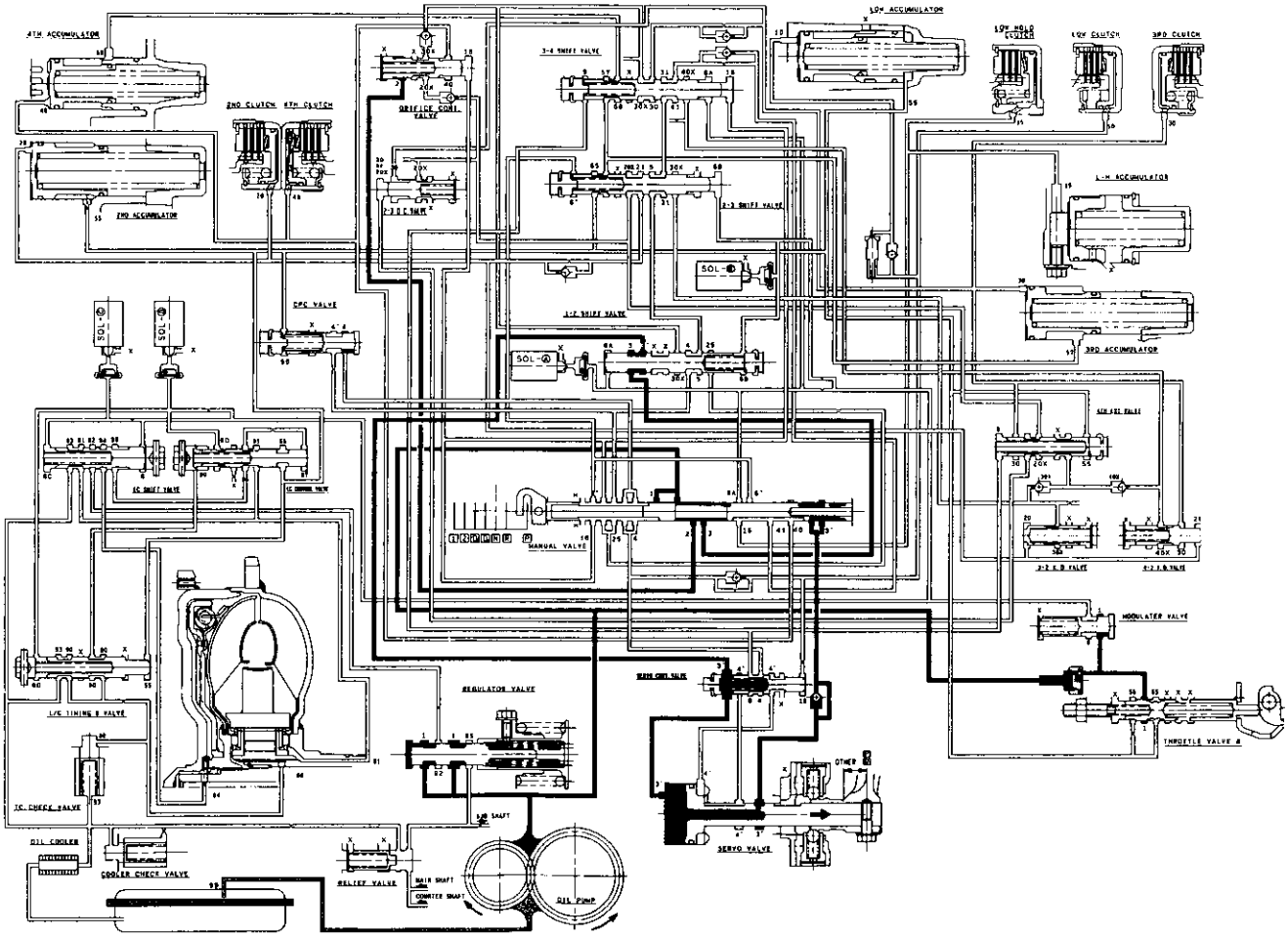

Description

Lock-up System

Lock-up Clutch

1. Operation (clutch on)

With the lock-up clutch on, the oil in the chamber between the torque converter cover and lock-up piston is discharged, and the converter oil exerts pressure through the piston against the converter cover. As a result, the converter turbine is locked on the converter cover firmly. The effect is to bypass the converter, thereby placing the car in direct drive.

Power flow

The power flows by way of:

Engine
↓
Drive plate
↓
Torque converter cover
↓
Lock-up piston
↓
Damper spring
↓
Turbine
↓
Mainshaft

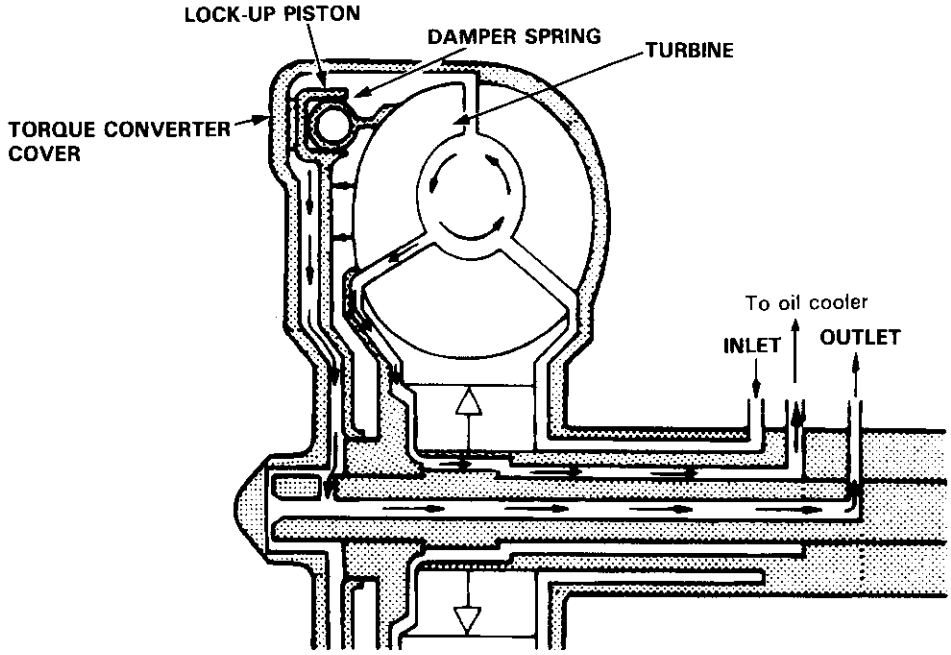

2. Operation (clutch off)

With the lock-up clutch off, the oil flows in the reverse of CLUTCH ON. As a result, the lock-up piston is moved away from the converter cover; that is, the torque converter lock-up is released.

Power flow

Engine
↓
Drive plate
↓
Torque converter cover
↓
Pump
↓
Turbine
↓
Mainshaft

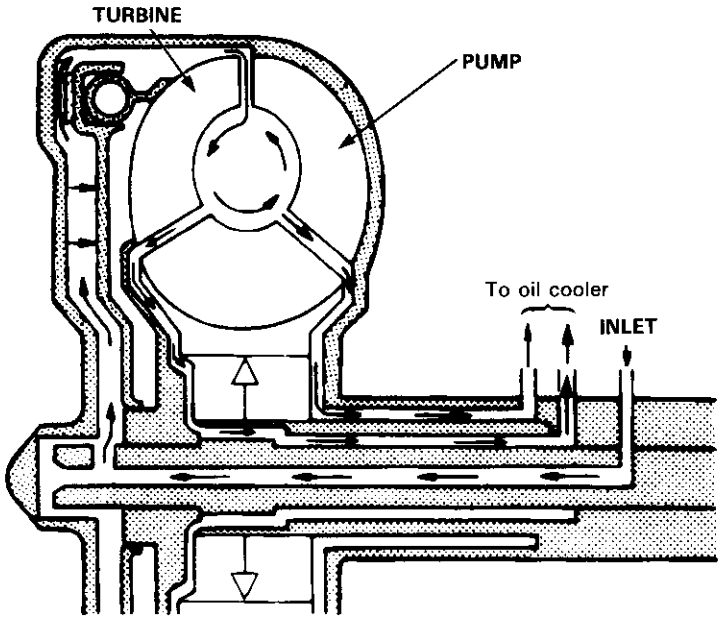

In $\boxed{D_4}$ position in 2nd, 3rd and 4th, and $\boxed{D_3}$ position in 3rd, pressurized fluid is drained from the back of the torque converter through an oil passage, causing the lock-up piston to be held against the torque converter cover. As this takes place, the mainshaft rotates at the same speed as the engine crankshaft. Together with hydraulic control, the TCM optimized the timing of the lock-up system. Under certain conditions, the lock-up clutch is applied during deceleration, in 3rd and 4th speed.

The lock-up system controls the range of lock-up according to lock-up control solenoid valves A and B, and throttle valve B. When lock-up control solenoid valves A and B activate, modulator pressure changes. Lock-up control solenoid valves A and B are mounted on the torque converter housing, and are controlled by the TCM.

NOTE:
When used, "left" or "right" indicates direction on the flowchart.

Solenoid valve / Lock-up condition	A	B
Lock-up OFF	OFF	OFF
Lock-up, slight	ON	OFF
Lock-up, half	ON	ON
Lock-up, full	ON	ON
Lock-up during deceleration	ON	Duty operation OFF ↔ON

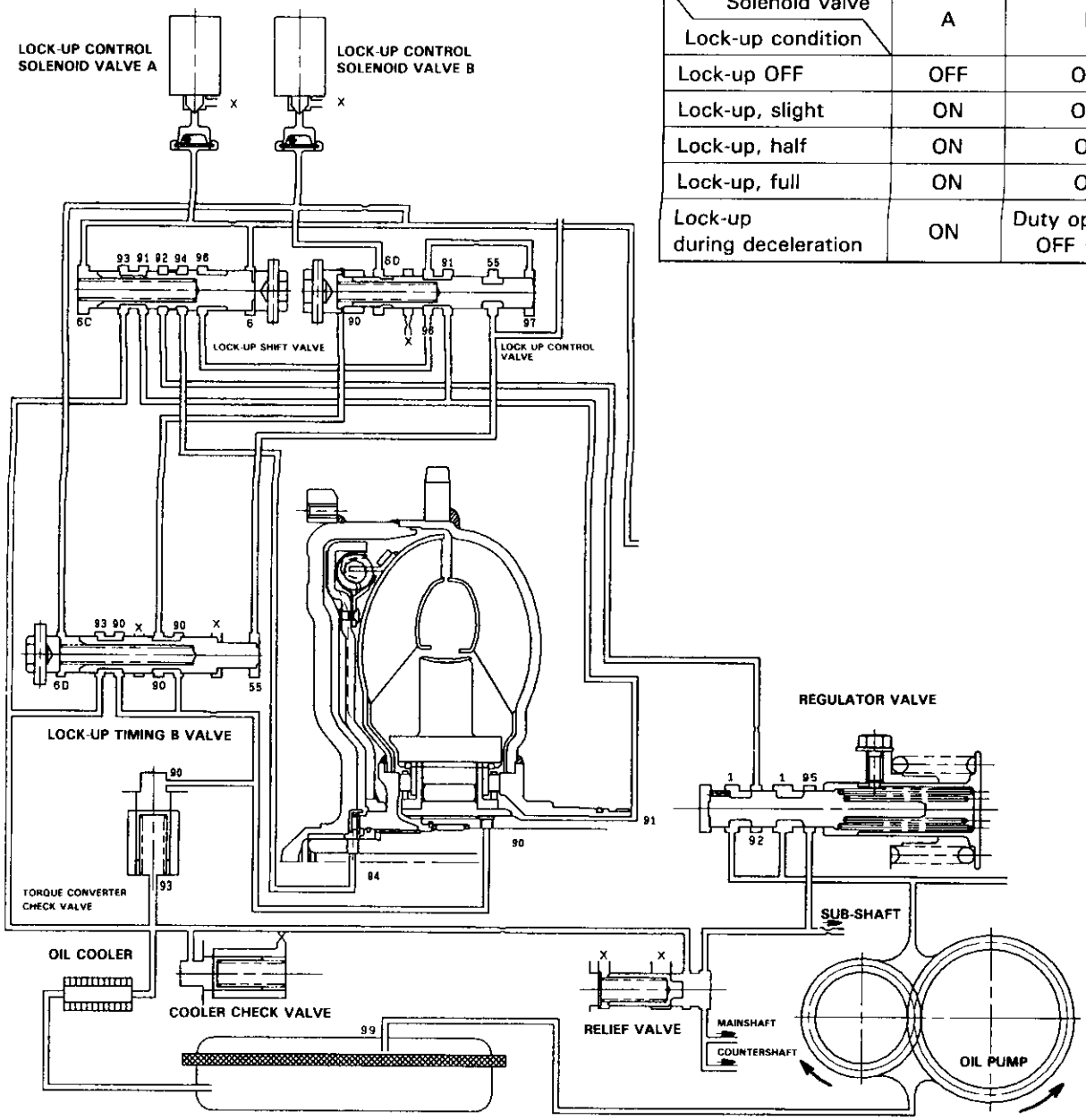

(cont'd)

Lock-up System (cont'd)

No Lock-up

The pressurized fluid regulated by the modulator works on both ends of the lock-up shift valve and on the left side of the lock-up control valve. Under this condition, the pressures working on both ends of the lock-up shift valve are equal, the shift valve is moved to the right side by the tension of the valve spring alone. The fluid from the oil pump will flow through the left side of the lock-up clutch to the torque converter; i,e., the lock-up clutch is in OFF condition.

NOTE: When used, "left" or "right" indicates direction on the flowchart.

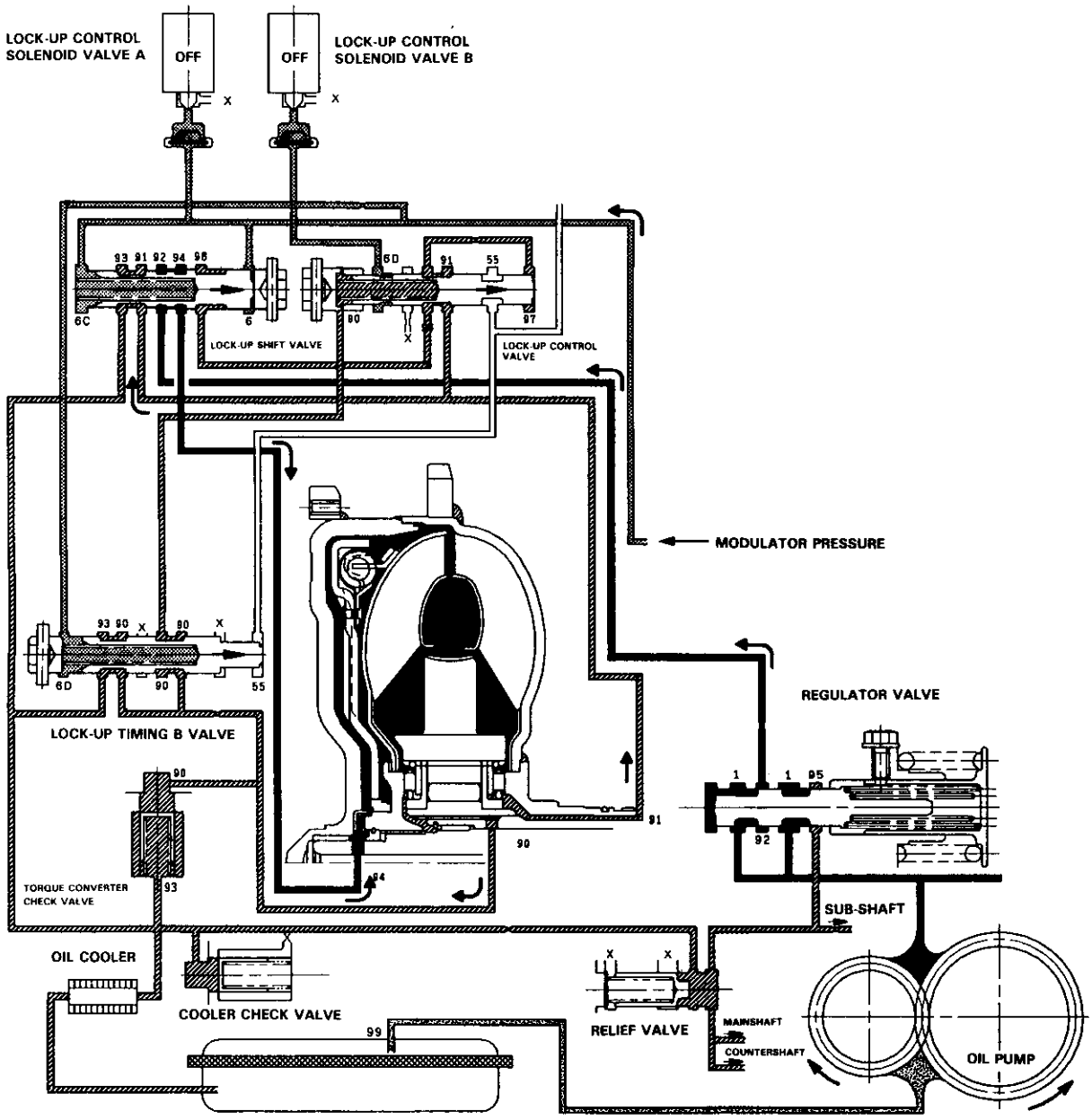

Partial Lock-up

Lock-up Control Solenoid Valve A: ON Lock-up Control Solenoid Valve B: OFF

The TCM switches the solenoid valve A on to release the modulator pressure in the left cavity of the lock-up shift valve. The modulator pressure in the right cavity of the lock-up shift valve overcomes the spring force, thus the lock-up shift valve is moved to the left side.

The modulator pressure is separated to the two passages:

F1: Torque Converter Inner Pressure: enters into right side-to engage lock-up clutch

F2: Torque Converter Back Pressure: enters into left side-to disengage lock-up clutch

The back pressure (F2) is regulated by the lock-up control valve whereas the position of the lock-up timing B valve is determined by the throttle B pressure, tension of the valve spring and pressure regulated by the modulator. Also the position of the lock-up control valve is determinded by the back pressure of the lock-up control valve and torque converter pressure regulated by the check valve. With the lock-up control solenoid valve B kept off, the modulator pressure is maintained in the left end of the lock-up control valve; in other words, the lock-up control valve is moved slightly to the left side. This slight movement of the lock-up control valve causes the back pressure to be lowered slightly, resulting in partial lock-up.

NOTE: When used, "left" or "right" indicates direction on the flowchart.

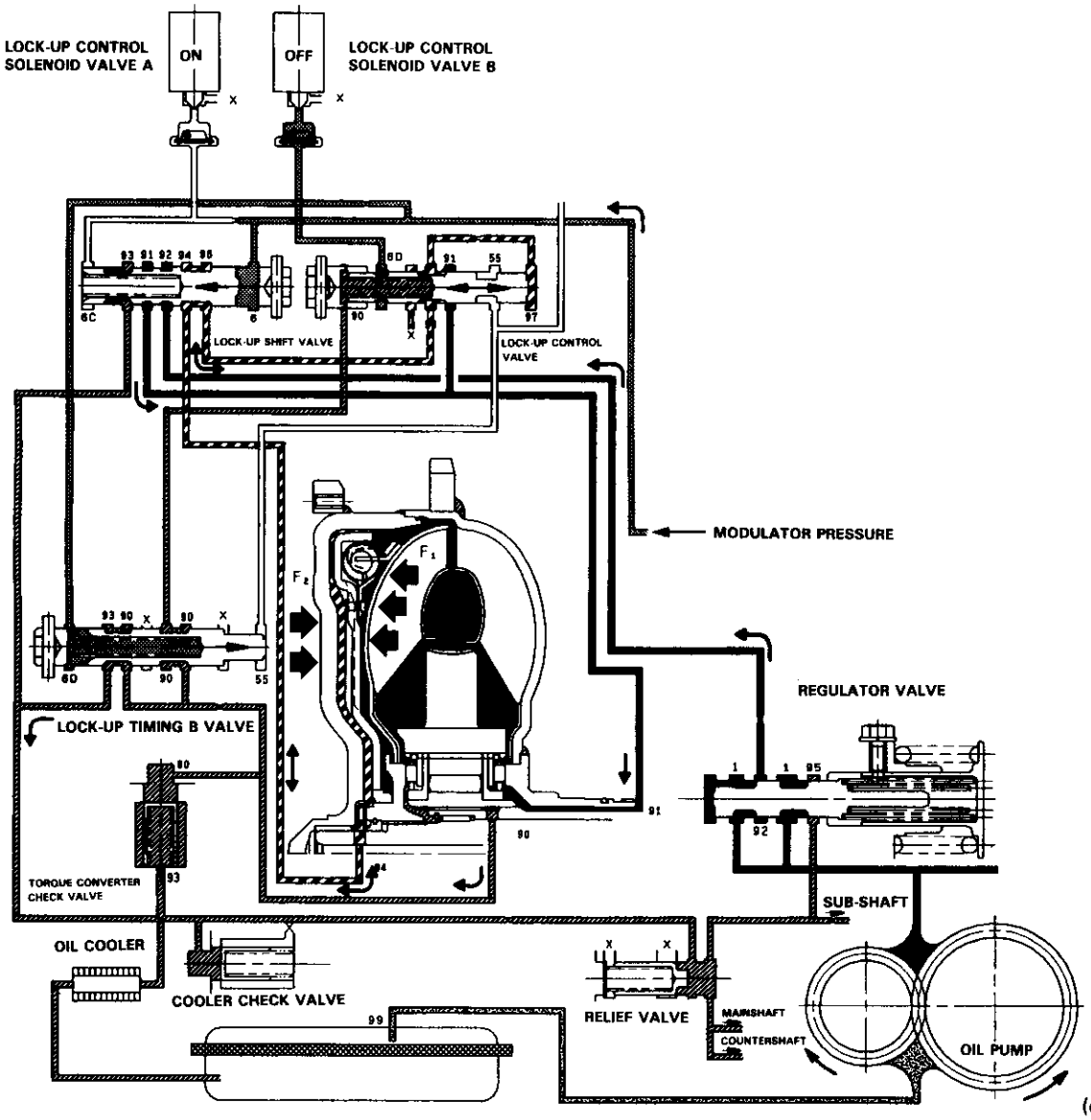

(cont'd)

Lock-up System (cont'd)

Half Lock-up

Lock-up Control Solenoid Valve A: ON Lock-up Control Solenoid Valve B: ON

The modulator pressure is released by the solenoid valve B, causing the modulator pressure in the left cavity of the lock-up control valve to lower.

Also the modulator pressure in the left cavity of the lock-up timing B valve is low. However the throttle B pressure is still low at this time; consequently, the lock-up timing B valve is kept on the right side by the spring force.

With the lock-up control solenoid valve B turned on, the lock-up control valve is moved somewhat to the left side, causing the back pressure (F2) to lower. This allows a greater amount of the fluid (F1) to work on the lock-up clutch so as to engage the clutch. The back pressure (F2) which still exists prevents the clutch from engaging fully.

NOTE: When used, "left" or "right" indicates direction on the flowchart.

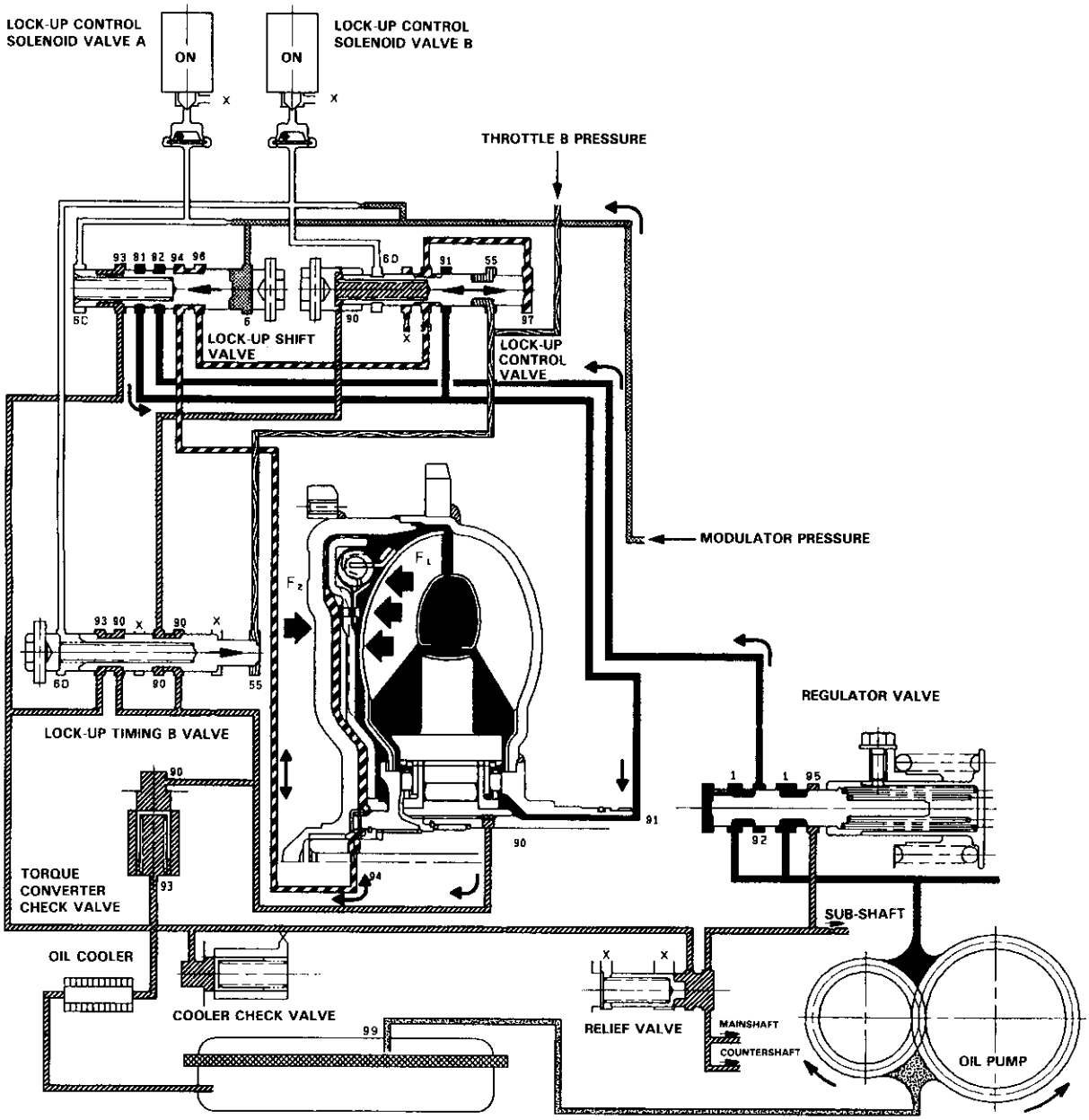

Full Lock-up

Lock-up Control Solenoid Valve A: ON Lock-up Control Solenoid Valve B: ON

When the vehicle speed further increases, the throttle B pressure is increased in accordance with the throttle opening. The lock-up timing B valve overcomes the spring force and moves to the left side. Also, this valve closes the oil port leading to the torque converter check valve.

Under this condition, the throttle B pressure working on the right end of the lock-up control valve becomes greater than that on the left end (modulator pressure in the left end has already been released by the solenoid valve B); i.e., the lock-up control valve is moved to the left. As this happens, the torque converter back pressure is released fully, causing the lock-up clutch to be engaged fully.

NOTE: When used, "left" or "right" indicates direction on the flowchart.

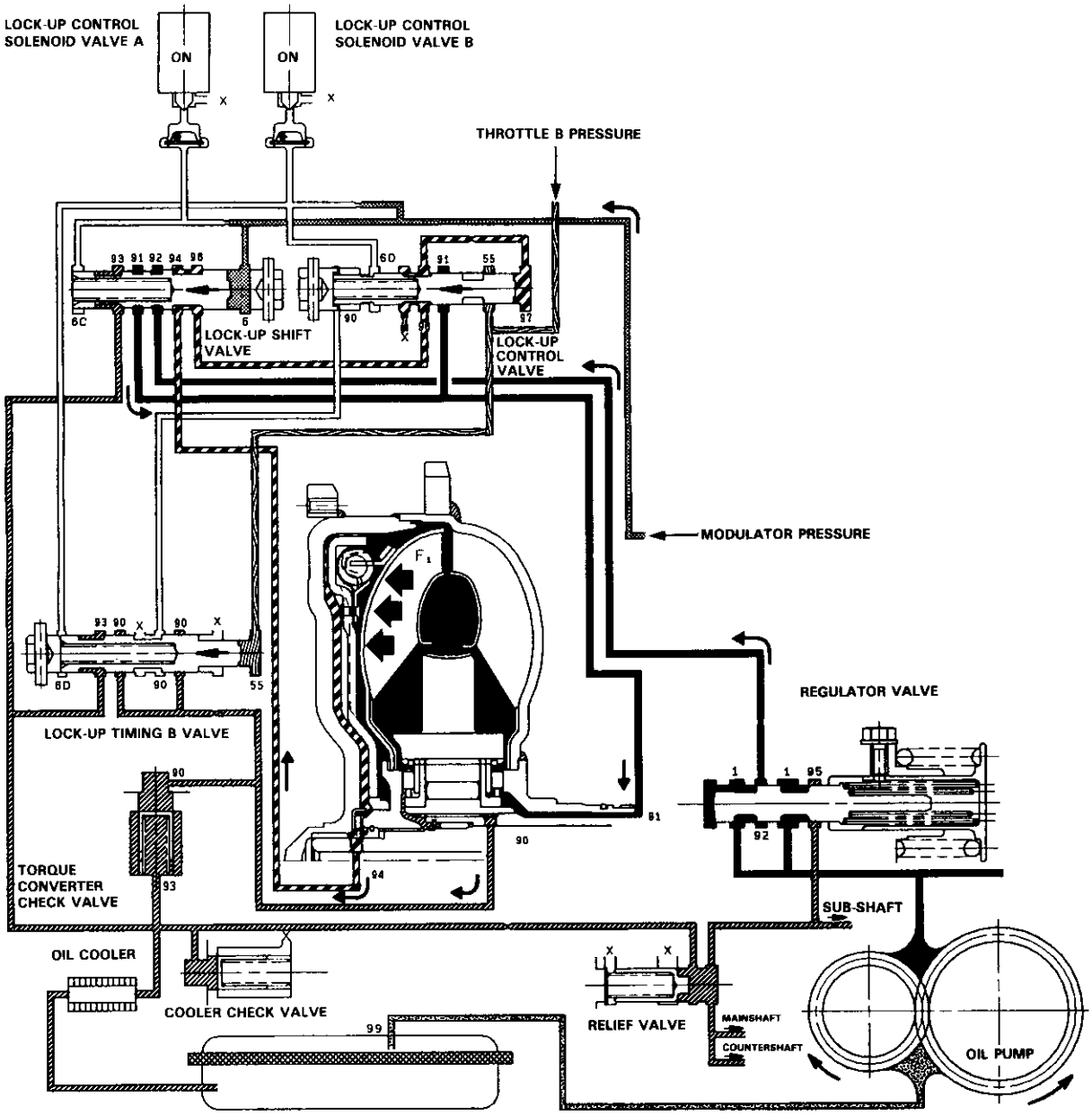

(cont'd)

Lock-up System (cont'd)

Deceleration Lock-up

Lock-up Control Solenoid Valve A: ON Lock-up Control Solenoid Valve B: Duty Operation (ON ↔ OFF)

The TCM switches solenoid valve B on and off rapidly under certain conditions. The slight lock-up and half lock-up regions are maintained so as to lock the torque converter properly.

NOTE: When used, "left" or "right" indicates direction on the flowchart.

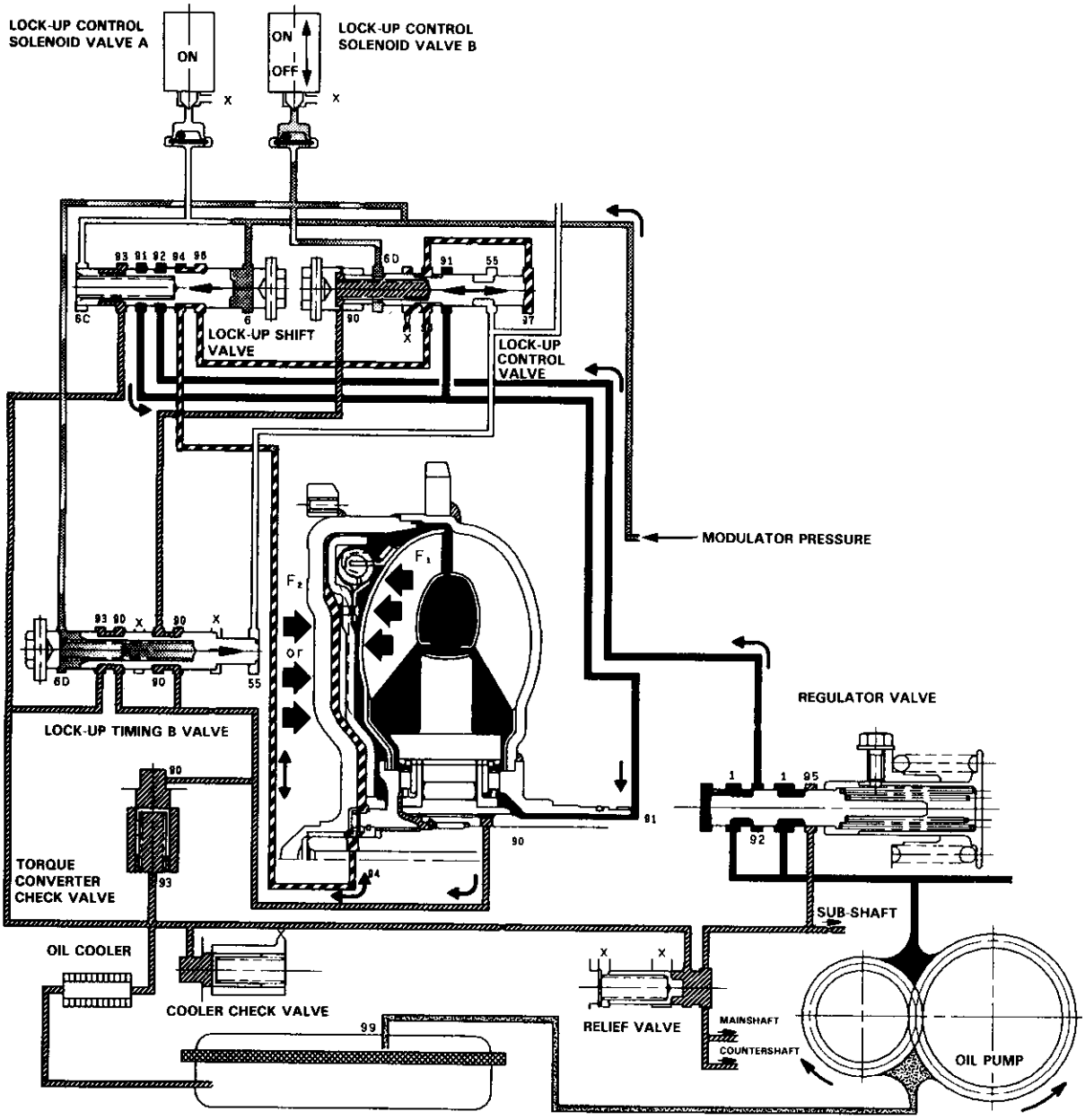

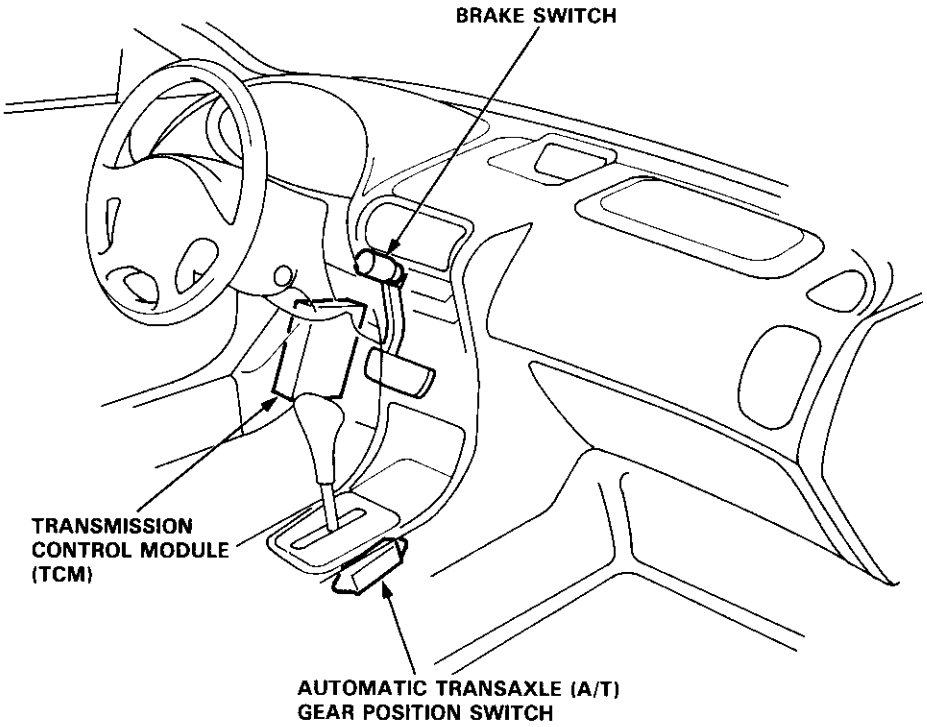
BRAKE SWITCH
TRANSMISSION CONTROL MODULE (TCM)
AUTOMATIC TRANSAXLE (A/T) GEAR POSITION SWITCH

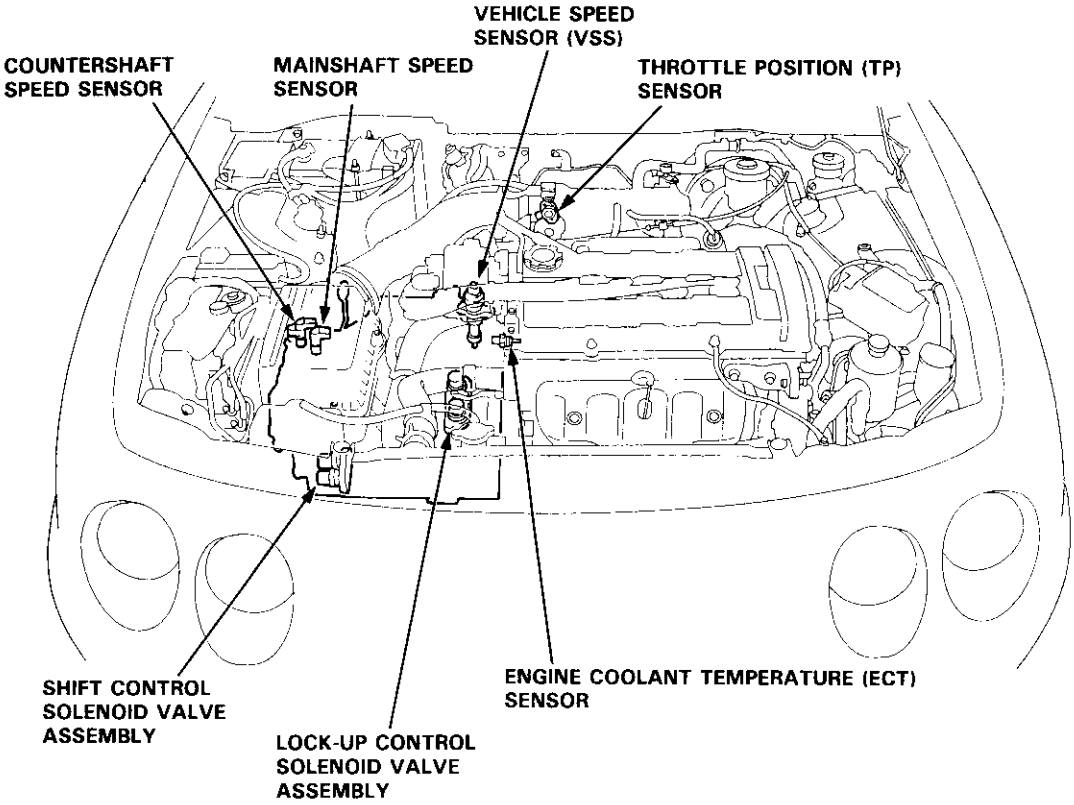
VEHICLE SPEED SENSOR (VSS)
COUNTERSHAFT SPEED SENSOR
MAINSHAFT SPEED SENSOR
THROTTLE POSITION (TP) SENSOR
SHIFT CONTROL SOLENOID VALVE ASSEMBLY
LOCK-UP CONTROL SOLENOID VALVE ASSEMBLY
ENGINE COOLANT TEMPERATURE (ECT) SENSOR

Circuit Diagram

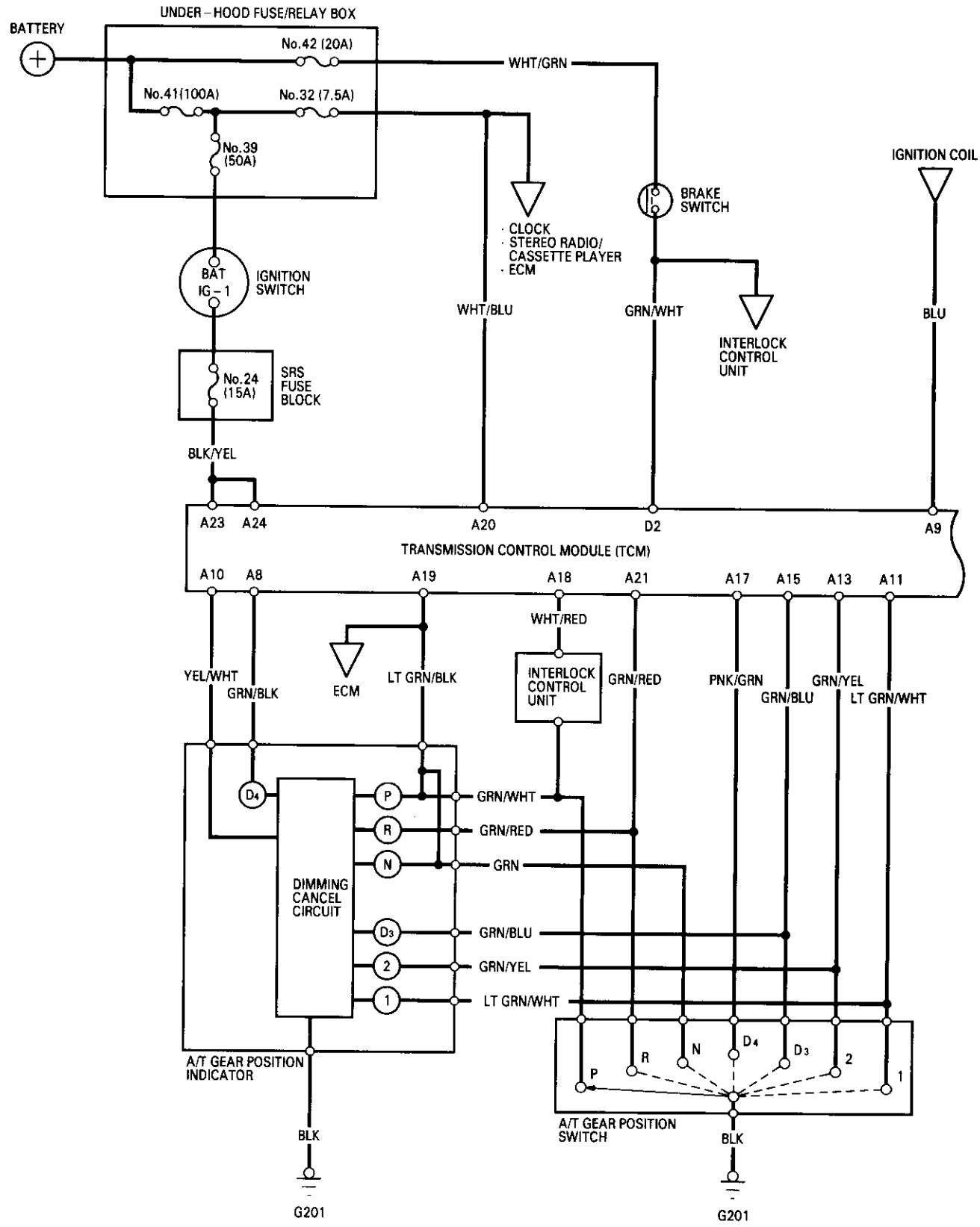

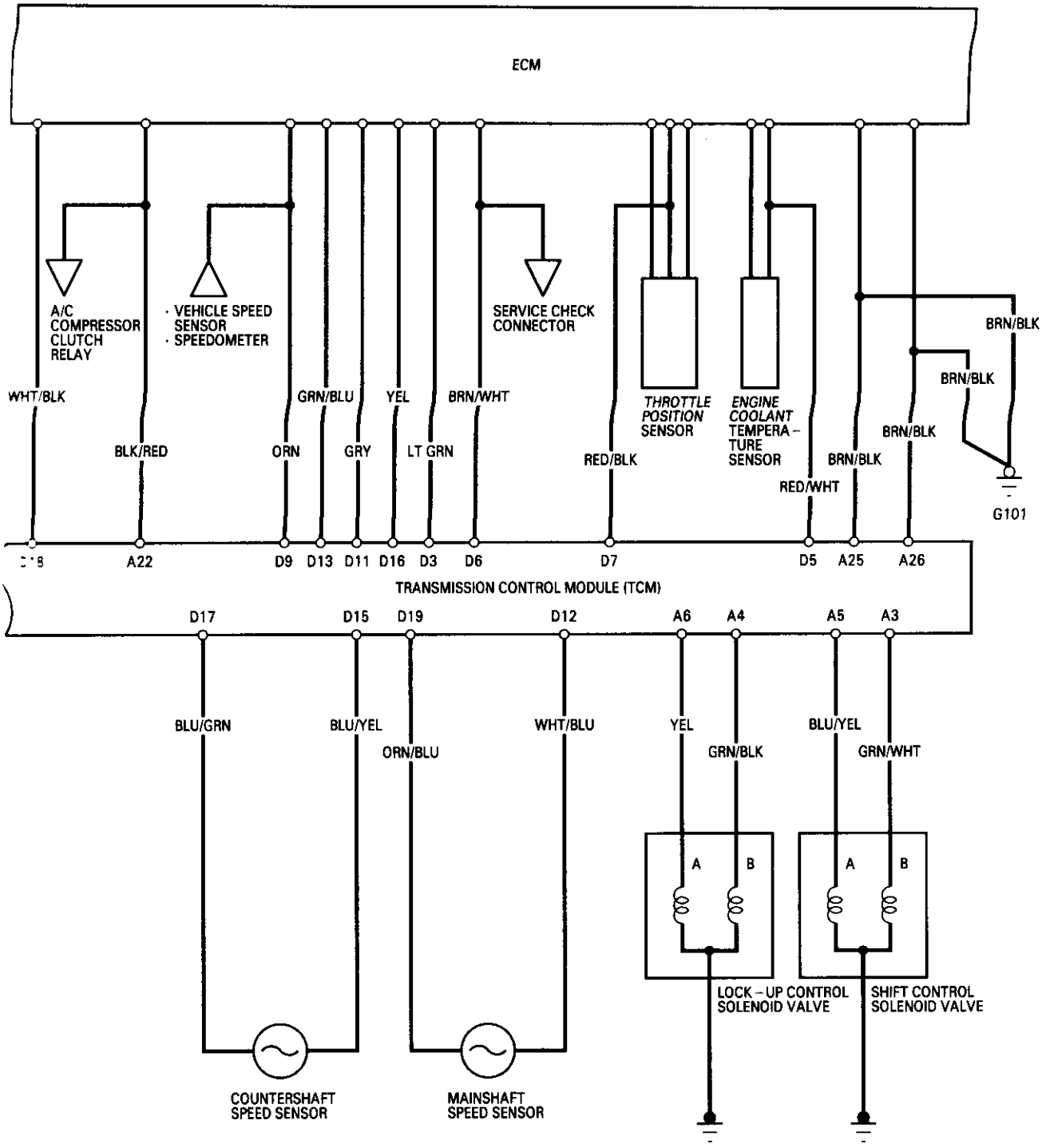

	A3	A5		A9	A11	A13	A15	A17	A19	A21	A23	A25
	A4	A6	A8	A10				A18	A20	A22	A24	A26

	D3	D5	D7	D9	D11	D13	D15	D17	D19	
D2		D6			D12		D16	D18		

TCM Terminal Locations

When the TCM senses an abnormality in the input or output systems, the [D4] indicator light in the gauge assembly will blink.
When the Service Check Connector (located under the dash on the passenger side) is connected with the special tool as shown, the [D4] indicator light will blink the Diagnostic Trouble Code (DTC) when the ignition switch is turned on.

When the [D4] indicator light has been reported on, connect the Service Check Connector with the special tool. Then turn on the ignition switch and observe the [D4] indicator light.

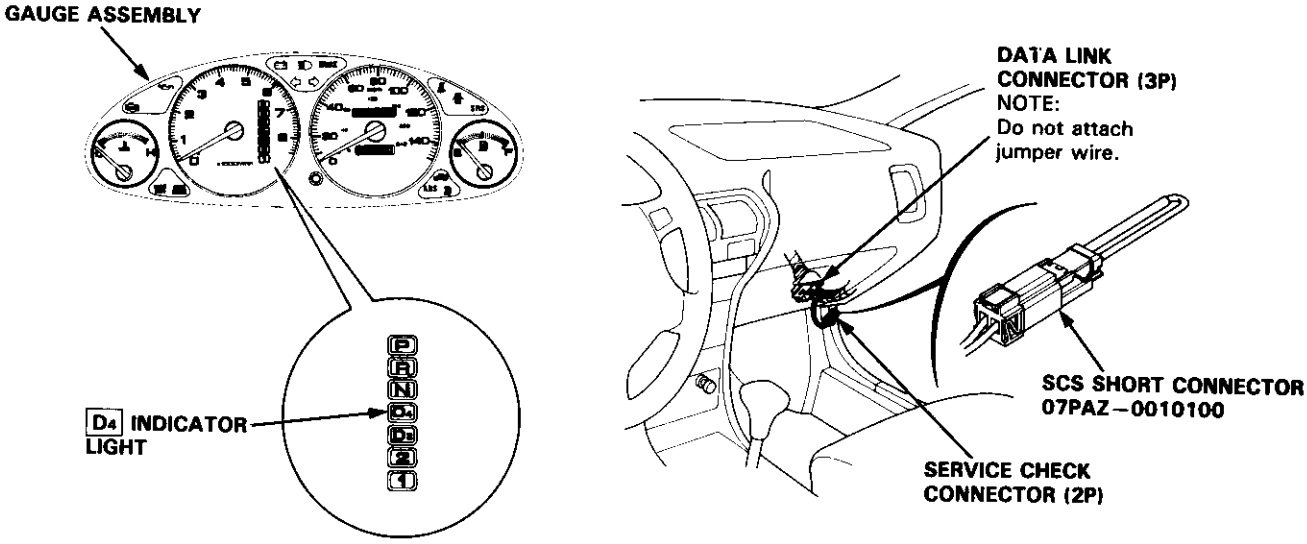

Codes 1 through 9 are indicated by individual short blinks, codes 10 through 15 are indicated by a series of long and short blinks. One long blink equals 10 short blinks. Add the long and short blinks together to determine the code. After determining the code, refer to the electrical system Symptom-to-Component Chart on pages 14-50 and 51.

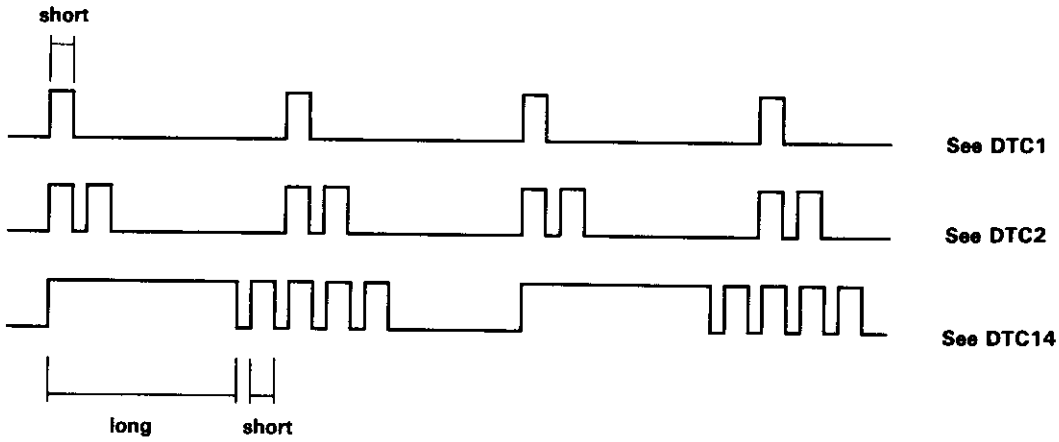

Some PGM-FI problems will also make the [D4] indicator light come on. After repairing the PGM-FI system, disconnect the BACK UP fuse (7.5 A) in the under-hood fuse/relay box for more than 10 seconds to reset the TCM memory.

NOTE:
- PGM-FI system
  The PGM-FI system on this model is a sequential multiport fuel injection system.
- Disconnecting the BACK UP fuse also cancels the radio anti-theft code, preset stations and the clock setting. Get the customer's code number and make note of the radio presets before removing the fuse so you can reset them.

CAUTION:

- **All SRS electrical wiring harnesses are covered with yellow insulation.**
- **Before disconnecting any part of the SRS wire harness, connect the short connectors (see page 23-70).**
- **Replace the entire affected SRS harness assembly if it has an open circuit or damaged wiring.**

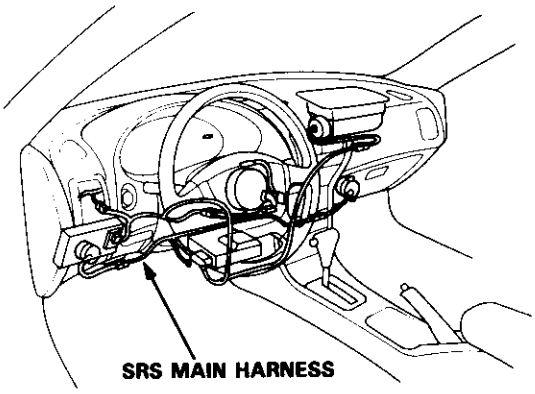

If the inspection for a particular failure code requires the use of Test Harness (07LAJ–PT3010A):

1. Remove the left side kick panel on the driver's side (see page 14-84).

2. Connect the wire harness to the Test Harness, and/or connect the Test Harness to the TCM according to the troubleshooting flowchart.

   NOTE:
   - Only the A and D terminals of the Test Harness are used for A/T troubleshooting.
   - Unless otherwise noted, use only the Digital Multimeter, commercially available or KS–AHM–32–003, for testing.

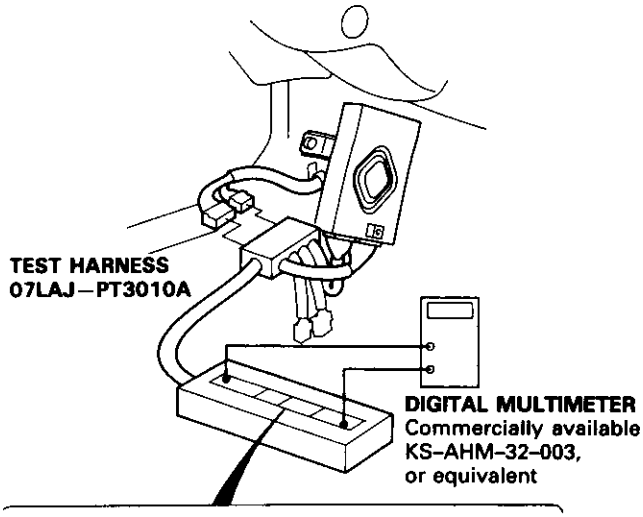

Terminal Locations

- **TCM Reset Procedure**

1. Turn the ignition switch off.

2. Remove the No. 32 BACK UP fuse (7.5 A) from the under-hood fuse/relay box for 10 seconds to reset the TCM.

   NOTE: Disconnecting the No. 32 BACK UP fuse also cancels the radio anti-theft code, preset stations and the clock setting. Get the customer's code number and make note of the radio presets before removing the fuse so you can reset them.

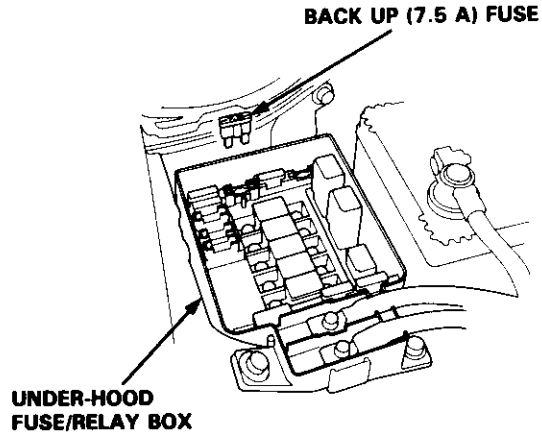

- **Final Procedure**

NOTE: This procedure must be done after any troubleshooting.

1. Remove the special tool from the Service Check Connector.

2. Reset the TCM.

3. Set the radio preset stations and clock setting.

Symptom-to-Component Chart

Electrical System

Number of D4 indicator light blinks while Service Check Connector is connected with the special tool.	D4 indicator light	Possible Cause	Symptom	Refer to page
1	Blinks	• Disconnected lock-up control solenoid valve A connector • Short or open in lock-up control solenoid valve A wire • Faulty lock-up control solenoid valve A	• Lock-up clutch does not engage. • Lock-up clutch does not disengage. • Unstable idle speed.	14-52
2	Blinks	• Disconnected lock-up control solenoid valve B connector • Short or open in lock-up control solenoid valve B wire • Faulty lock-up control solenoid valve B	• Lock-up clutch does not engage.	14-54
3	Blinks or OFF	• Disconnected throttle position (TP) sensor connector • Short or open in TP sensor wire • Faulty TP sensor	• Lock-up clutch does not engage.	14-56
4	Blinks	• Disconnected vehicle speed sensor (VSS) connector • Short or open in VSS wire • Faulty VSS	• Lock-up clutch does not engage.	14-57
5	Blinks	• Short in A/T gear position switch wire • Faulty A/T gear position switch	• Fails to shift other than 2nd↔4th gears. • Lock-up clutch does not engage.	14-58
6	OFF	• Disconnected A/T gear position switch connector • Open in A/T gear position switch wire • Faulty A/T gear position switch	• Fails to shift other than 2nd↔4th gears. • Lock-up clutch does not engage. • Lock-up clutch engages and disengages alternately.	14-60
7	Blinks	• Disconnected shift control solenoid valve A connector • Short or open in shift control solenoid valve A wire • Faulty shift control solenoid valve A	• Fails to shift (between 1st↔4th, 2nd↔4th or 2nd↔3rd gears only). • Fails to shift (stuck in 4th gear).	14-62
8	Blinks	• Disconnected shift control solenoid valve B connector • Short or open in shift control solenoid valve B wire • Faulty shift control solenoid valve B	• Fails to shift (stuck in 1st or 4th gears).	14-64
9	Blinks	• Disconnected countershaft speed sensor connector • Short or open in the countershaft speed sensor wire • Faulty countershaft speed sensor	• Lock-up clutch does not engage.	14-66

Number of D4 indicator light blinks while Service Check Connector is connected with the special tool.	D4 indicator light	Possible Cause	Symptom	Refer to page
10	Blinks	• Disconnected engine coolant temperature (ECT) sensor connector • Short or open in ECT sensor wire • Faulty ECT sensor	• Lock-up clutch does not engage.	14-68
11	OFF	• Disconnected ignition coil connector • Short or open in ignition coil wire • Faulty ignition coil	• Lock-up clutch does not engage.	14-70
13	Blinks	• Short or open in LT GRN wire between the D3 terminal and ECM • Faulty barometric pressure (BARO) sensor NOTE: The BARO sensor is built into the ECM	• No specific symptom appears.	14-71
14	Blinks	• Short or open in FAS (YEL) wire between the D16 terminal and ECM • Faulty ECM	• Transmission jerks hard when shifting.	14-73
15	OFF	• Disconnected mainshaft speed sensor connector • Short or open in mainshaft speed sensor wire • Faulty mainshaft speed sensor	• Transmission jerks hard when shifting.	14-75

If the self-diagnosis D4 indicator light does not blink, perform an inspection according to the table below.

Symptom	Probable Cause	Ref.page
D4 indicator light is on steady, not blinking whenever the ignition is on.	——	14-77
D4 indicator light does not come on for 2 seconds after ignition is first turned on.	——	14-78
Lock-up clutch does not have duty operation (ON↔OFF).	Check A/C signal with A/C on.	14-80
Lock-up clutch does not engage.		
Shift lever cannot be moved from P position with the brake pedal depressed.	Check brake switch signal.	14-81

- If a customer describes the symptoms for codes 3, (yet the D4 indicator light is not blinking), 6, 11 or 15, it will be necessary to recreate the symptom by test driving, and then checking the D4 indicator light with the ignition still ON.
- If the D4 indicator light displays codes other than those listed above or stays lit continuously, the TCM is faulty.
- Sometimes the D4 indicator light and the Malfunction Indicator Lamp (MIL)/Check Engine light may come on simultaneously. If so, check the PGM-FI system according to the number of blinks on the MIL/Check Engine light, then reset the memory by removing the BACK UP fuse in the under-hood fuse/relay box for more than 10 seconds. Drive the vehicle for several minutes at speed over 30 mph (50 km/h), then recheck the MIL/Check Engine light.

NOTE:
- PGM-FI system
  The PGM-FI system on this model is a sequential multiport fuel injection system.
- Disconnecting the BACK UP fuse also cancels the radio anti-theft code, preset stations and the clock setting. Get the customer's code number and make note of the radio presets before removing the fuse so you can reset them.

Troubleshooting Flowchart

Self-diagnosis D4 indicator light blinks once.

Possible Cause

- Disconnected lock-up control solenoid valve A connector
- Short or open in lock-up control solenoid valve A wire
- Faulty lock-up control solenoid valve A

Turn the ignition switch ON.

Check whether the Malfunction Indicator Lamp (MIL) blinks (see section 11).

Is the MIL blinking?

YES → **Repair the PGM-FI System (see section 11).**

NO

Turn the ignition switch OFF.

Disconnect the 26P and 22P connectors from the TCM.
Connect the Test Harness "A" and "D" connectors to the wire harness only, not to the TCM (see page 14-49).

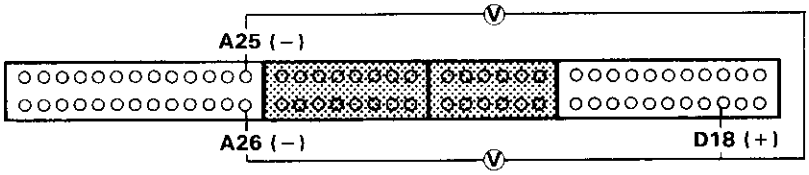

Turn the ignition switch ON.

Measure the voltage between the D18 and A25 or A26 terminals.

Is the voltage 4.75−5.25 V?

NO → **Repair open or short in WHT/BLK wire between the D18 terminal and the ECM.**

YES

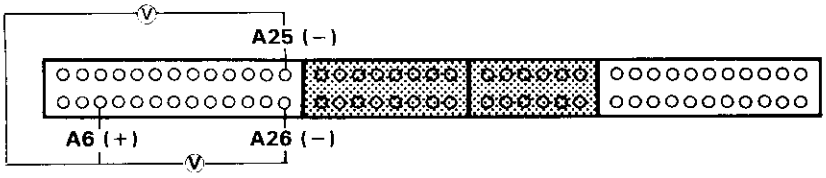

Measure the voltage between the A6 and A25 or A26 terminals.

Is there voltage?

YES → **Repair short to power source in YEL wire between the A6 terminal and the lock-up control solenoid valve A.**

NO

Turn the ignition switch OFF.

To page 14-53

From page 14-52

Measure the resistance between the A6 and A25 or A26 terminals.

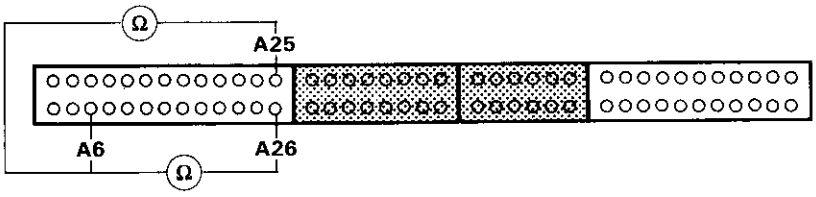

Is the resistance 14–16 Ω?

YES → **Check for loose TCM connectors. If necessary, substitute a known-good solenoid valve assembly or TCM and recheck.**

NO

Disconnect the 2P connector from the lock-up control solenoid valve assembly.

Check for continuity between the A6 and A25 or A26 terminals.

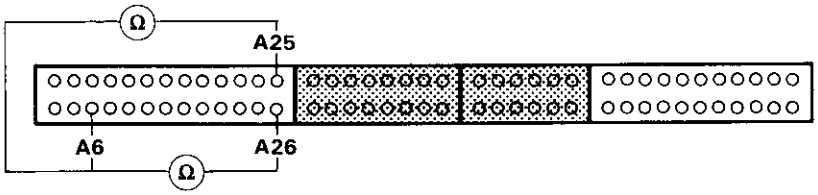

Is there continuity?

YES → **Repair short to ground in YEL wire between the A6 terminal and the lock-up control solenoid valve A.**

NO

Measure the resistance of the solenoid at the 2P connector.

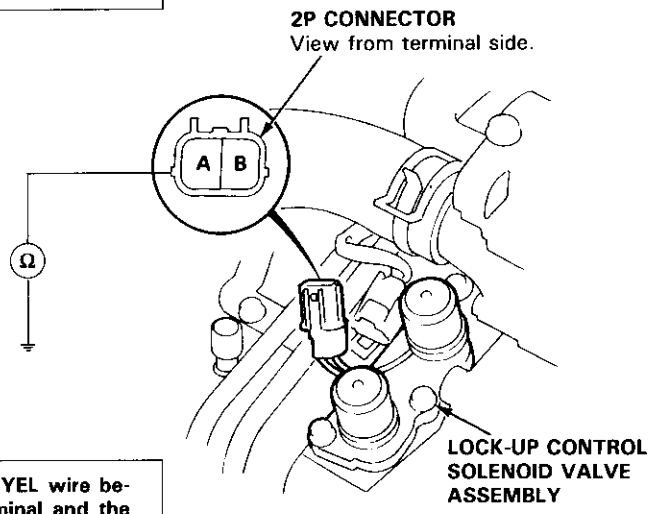

Is the resistance 14–16 Ω?

YES → **Check for open in YEL wire between the A6 terminal and the lock-up control solenoid valve A.**

NO

Replace the lock-up control solenoid valve assembly.

(cont'd)

Troubleshooting Flowchart (cont'd)

Self-diagnosis D4 indicator light blinks twice.

Turn the ignition switch ON.

Check whether the Malfunction Indicator Lamp (MIL) blinks (see section 11).

Is the MIL blinking?

YES → **Repair the PGM-FI System (see section 11).**

NO

Turn the ignition switch OFF.

Disconnect the 26P and 22P connectors from the TCM.
Connect the Test Harness "A" and "D" connectors to the wire harness only, not to the TCM (see page 14-49).

Turn the ignition switch ON.

Measure the voltage between the D18 and A25 or A26 terminals.

Is the voltage 4.75–5.25 V?

NO → **Repair open or short in WHT/BLK wire between the D18 terminal and the ECM.**

YES

Measure the voltage between the A4 and A25 or A26 terminals.

Is there voltage?

YES → **Repair short to power source in GRN/BLK wire between the A4 terminal and the lock-up control solenoid valve B.**

NO

Turn the ignition switch OFF.

To page 14-55

Possible Cause
• Disconnected lock-up control solenoid valve B connector • Short or open in lock-up control solenoid valve B wire • Faulty lock-up control solenoid valve B

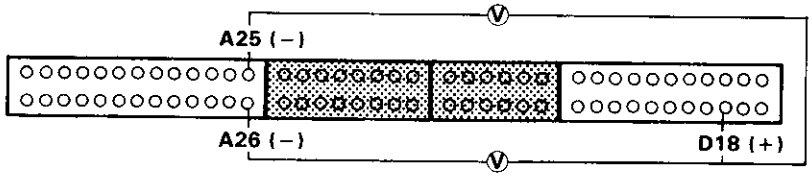

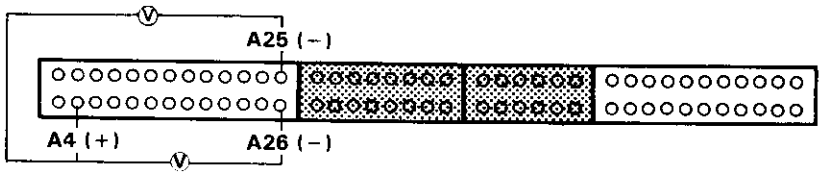

From page 14-54

Measure the resistance between the A4 and A25 or A26 terminals.

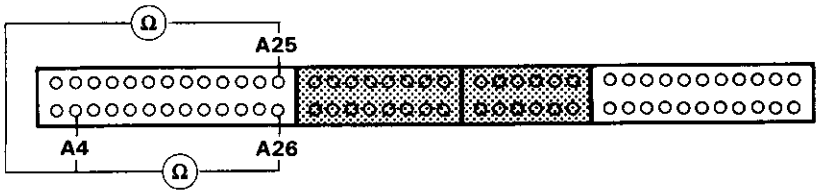

Is the resistance 14–16 Ω?

YES → **Check for loose TCM connectors. If necessary, substitute a known-good solenoid valve assembly or TCM and recheck.**

NO

Disconnect the 2P connector from the lock-up control solenoid valve assembly.

Check for continuity between the A4 and A25 or A26 terminals.

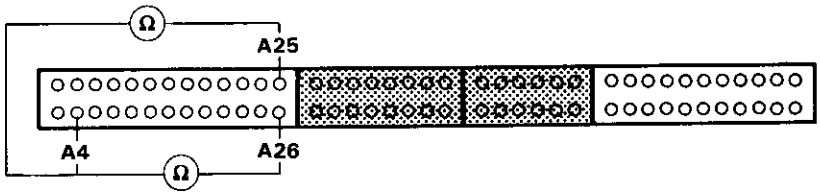

Is there continuity?

YES → **Repair short to ground in GRN/BLK wire between the A4 terminal and the lock-up control solenoid valve B.**

NO

Measure the resistance of the solenoid at the 2P connector.

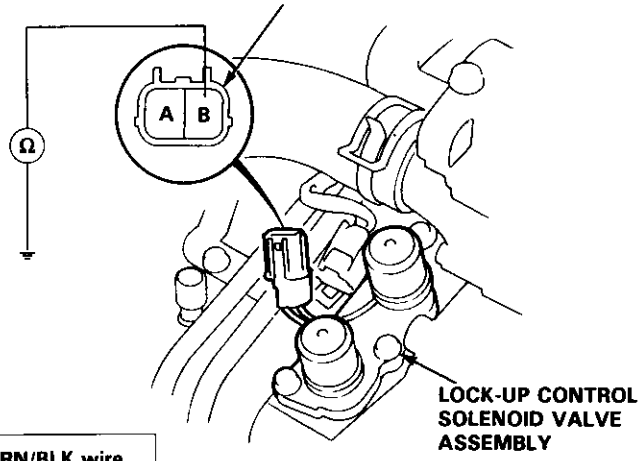

Is the resistance 14–16 Ω?

YES → **Check for open in GRN/BLK wire between the A4 terminal and the lock-up control solenoid valve B.**

NO

Replace the lock-up control solenoid valve assembly.

(cont'd)

Troubleshooting Flowchart (cont'd)

Self-diagnosis D4 indicator light blinks three times.

Possible Cause
• Disconnected throttle position (TP) sensor connector • Short or open in TP sensor wire • Faulty TP sensor

Turn the ignition switch ON.

Check whether the Malfunction Indicator Lamp (MIL) blinks (see section 11).

Is the MIL blinking?

YES → **Repair the PGM-FI System (see section 11).**

NO

Turn the ignition switch OFF.

Disconnect the 26P and 22P connectors from the TCM.
Connect the Test Harness "A" and "D" connectors to the wire harness only, not to the TCM (see page 14-49).

Turn the ignition switch ON.

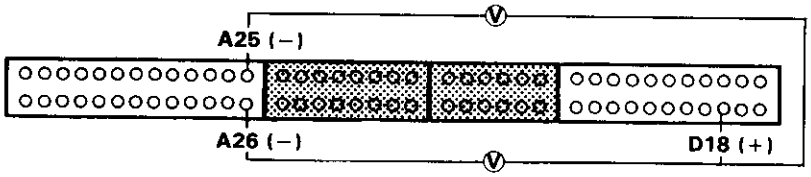

Measure the voltage between the D18 and A25 or A26 terminals.

Is the voltage 4.75–5.25 V?

NO → **Repair open or short in WHT/BLK wire between the D18 terminal and the ECM.**

YES

Turn the ignition switch OFF.

Connect the Test Harness "A" and "D" connectors to the TCM.

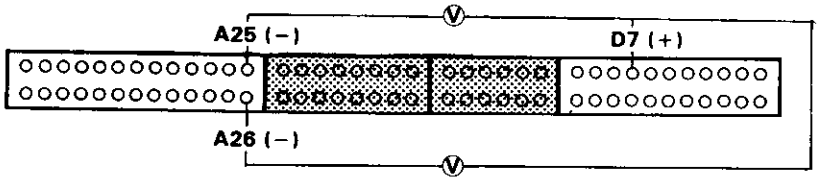

Turn the ignition switch ON.

Measure the voltage between the D7 and A25 or A26 terminals.

Is the voltage 0.4–0.6 V?

NO → **Repair open or short in RED/BLK wire between the D7 terminal and the TP sensor.**

YES

Check for loose TCM connectors. If necessary, substitute a known-good TCM and recheck.

Self-diagnosis D4 indicator light blinks four times.

Possible Cause
• Disconnected vehicle speed sensor (VSS) connector • Short or open in VSS wire • Faulty VSS

Does the speedometer operate?

NO → **Refer to Section 23 for vehicle speed sensor (VSS) test.**

YES

Raise the car.

⚠ WARNING

- **Make sure lifts, jacks, and safety stands are placed properly (see section 1).**
- **Set the parking brake securely and block the rear wheels.**
- **Jack up the front of the car and support with safety stands.**

Shift transmission to N position.

Disconnect the 26P and 22P connectors from the TCM.
Connect the Test Harness "A" and "D" connectors to the wire harness only, not to the TCM (see page 14-49).

Turn the ignition switch ON.

Rotate the front wheel and check for voltage between the D9 and A25 or A26 terminals. Block the other wheel so it does not turn.

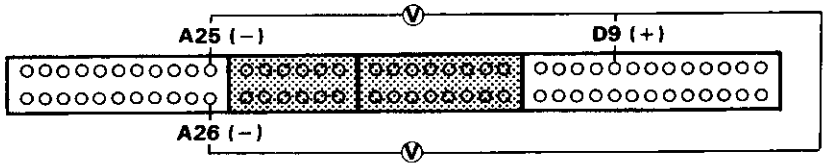

Does the voltage 0 V and approx. 10 V appear alternately?

NO → **Check for short or open in ORN wire between the D9 terminal and the VSS. If wire is OK, check the VSS (see section 23).**

YES

Check for loose TCM connectors. If necessary, substitute a known-good TCM and recheck.

(cont'd)

Troubleshooting Flowchart (cont'd)

Self-diagnosis D4 indicator light blinks five times.

Turn the ignition switch ON.

Observe the A/T gear position indicator, and select each position separately.

Do any indicators stay on when the selector lever is not in that position?

YES → **The system is OK at this time. Check the wire harness for damage.**

NO

Turn the ignition switch OFF.

Connect the Test Harness between the TCM and connectors (see page 14-49).

Turn the ignition switch ON.

Shift to other than R position.

Measure the voltage between the A21 and A25 or A26 terminals.

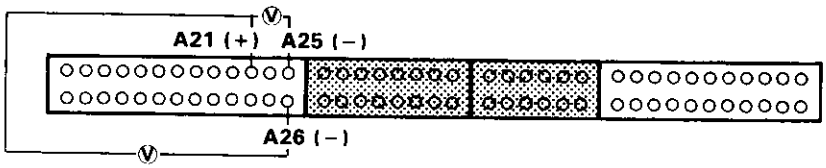

Is there battery voltage?

NO → **Check for short in GRN/RED wire between the A21 terminal and the A/T gear position switch or A/T gear position indicator. If wire is OK, check for loose TCM connectors. If necessary, substitute a known-good TCM and recheck.**

YES

Shift to other than N and P position.

Measure the voltage between the A19 and A25 or A26 terminals.

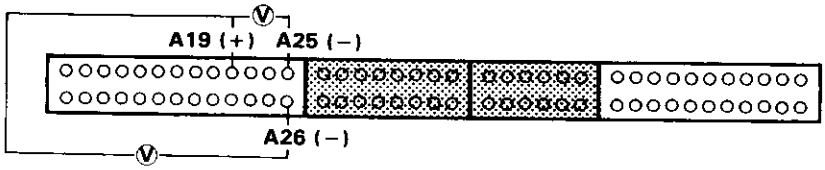

Is the battery voltage?

NO → **Check for short in LT GRN/BLK wire between the A19 terminal and the A/T gear position indicator, or a short in GRN/WHT or GRN wires between the A/T gear position indicator and the A/T gear position switch. If wire is OK, check for loose TCM connectors. If necessary, substitute a known-good TCM and recheck.**

YES

To page 14-59

Possible Cause
• Short in A/T gear position switch wire • Faulty A/T gear position switch

NOTE: Code 5 is caused when the TCM receives two gear position inputs at the same time.

From page 14-58

Shift to other than D4 position.

Measure the voltage between the A17 and A25 or A26 terminals.

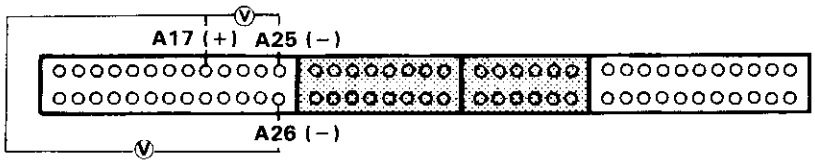

Is there battery voltage?

NO → Check for short in PNK/GRN wire between the A17 terminal and the A/T gear position switch. If wire is OK, check for loose TCM connectors. If necessary, substitute a known-good TCM and recheck.

YES

Shift to other than D3 position.

Measure the voltage between the A15 and A25 or A26 terminals.

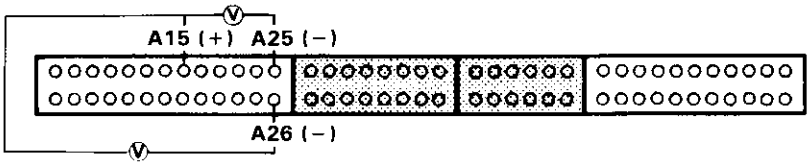

Is there battery voltage?

NO → Check for short in GRN/BLU wire between the A15 terminal and the A/T gear position switch or A/T gear position indicator. If wire is OK, check for loose TCM connectors. If necessary, substitute a known-good TCM and recheck.

YES

Shift to other than 2 position.

Measure the voltage between the A13 and A25 or A26 terminals.

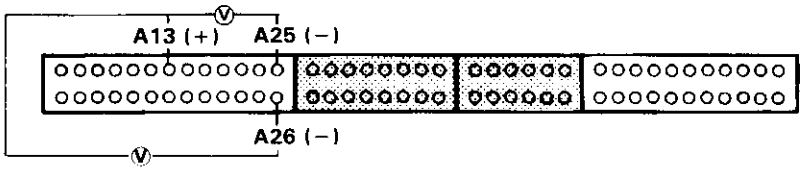

Is there battery voltage?

NO → Check for short in GRN/YEL wire between the A13 terminal and the A/T gear position switch or A/T gear position indicator. If wire is OK, check for loose TCM connectors. If necessary, substitute a known-good TCM and recheck.

YES

Shift to other than 1 position.

Measure the voltage between the A11 and A25 or A26 terminals.

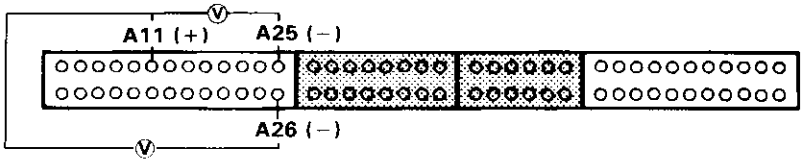

Is there battery voltage?

NO → Check for short in LT GRN/WHT wire between the A11 terminal and the A/T gear position switch or A/T gear position indicator. If wire is OK, check for loose TCM connectors. If necessary, substitute a known-good TCM and recheck.

YES

Check for loose TCM connectors. If necessary, substitute a known-good TCM and recheck.

(cont'd)

Troubleshooting Flowchart (cont'd)

Self-diagnosis D4 indicator light blinks six times.

Connect the Test Harness between the TCM and connectors (see page 14-49).

Turn the ignition switch ON.

Shift to R position.

Measure the voltage between the A21 and A25 or A26 terminals.

Is there voltage?

YES → **Repair open in GRN/RED wire between the A21 terminal and the A/T gear position switch.**

NO

Shift to N or P position.

Measure the voltage between the A19 and A25 or A26 terminals.

Is there voltage?

YES → **Repair open in LT GRN/BLK wire between the A19 terminal and the A/T gear position indicator.**

NO

To page 14-61

Possible Cause
• Disconnected A/T gear position switch connector • Open in A/T gear position switch wire • Faulty A/T gear position switch

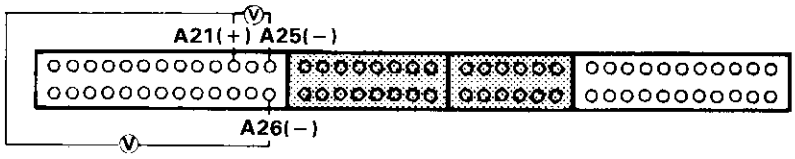

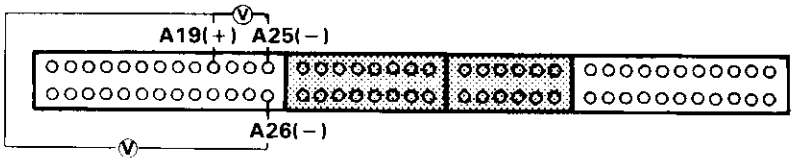

From page 14-60

Shift to [D4] position.

Measure the voltage between the A17 and A25 or A26 terminals.

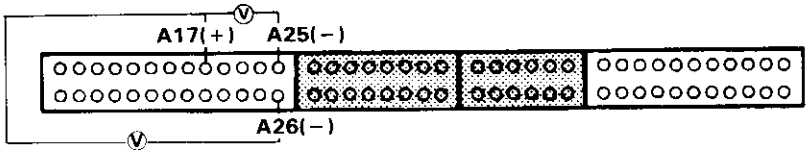

Is there voltage?

YES → **Repair open in PNK/GRN wire between the A17 terminal and the A/T gear position switch.**

NO

Shift to [D3] position.

Measure the voltage between the A15 and A25 or A26 terminals.

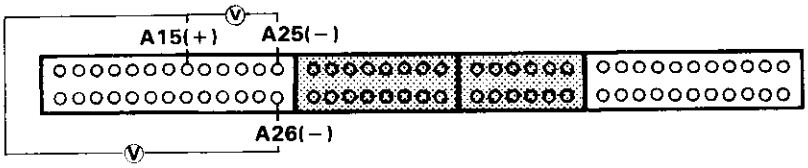

Is there voltage?

YES → **Repair open in GRN/BLU wire between the A15 terminal and the A/T gear position switch.**

NO

Shift to [2] position.

Measure the voltage between the A13 and A25 or A26 terminals.

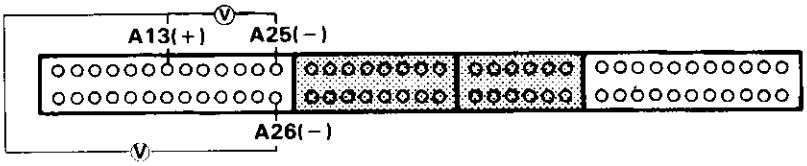

Is there voltage?

YES → **Repair open in GRN/YEL wire between the A13 terminal and the A/T gear position switch.**

NO

Shift to [1] position.

Measure the voltage between the A11 and A25 or A26 terminals.

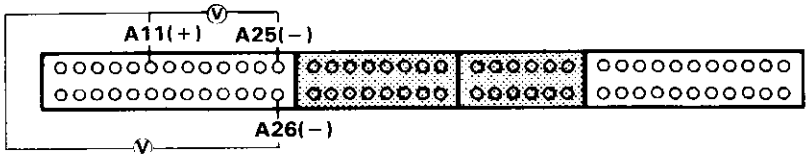

Is there voltage?

YES → **Repair open in LT GRN/WHT wire between the A11 terminal and the A/T gear position switch.**

NO

Check for loose TCM connectors. If necessary, substitute a known-good TCM and recheck.

(cont'd)

Troubleshooting Flowchart (cont'd)

Self-diagnosis D4 indicator light blinks seven times.

Possible Cause
• Disconnected shift control solenoid valve A connector • Short or open in shift control solenoid valve A wire • Faulty shift control solenoid valve A

Turn the ignition switch ON.

Check whether the Malfunction Indicator Lamp (MIL) blinks (see section 11).

Is the MIL blinking?

YES → **Repair the PGM-FI System (see section 11).**

NO

Turn the ignition switch OFF.

Disconnect the 26P and 22P connectors from the TCM.
Connect the Test Harness "A" and "D" connectors to the wire harness only not to the TCM (see page 14-49).

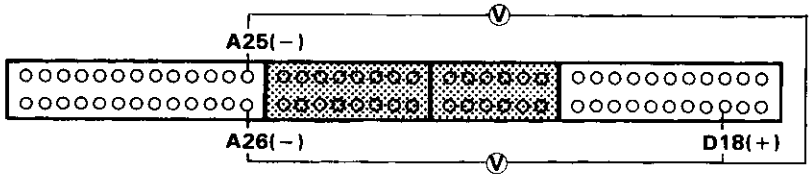

Turn the ignition switch ON.

Measure the voltage between the D18 and A25 or A26 terminals.

Is the voltage 4.75−5.25 V?

NO → **Repair open or short in WHT/BLK wire between the D18 terminal and the ECM.**

YES

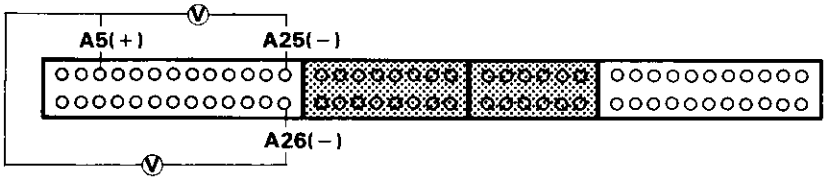

Measure the voltage between the A5 and A25 or A26 terminals.

Is there voltage?

YES → **Repair short to power source in BLU/YEL wire between the A5 terminal and the shift control solenoid valve A.**

NO

Turn the ignition switch OFF.

To page 14-63

From page 14-62

Measure the resistance between the A5 and A25 or A26 terminals.

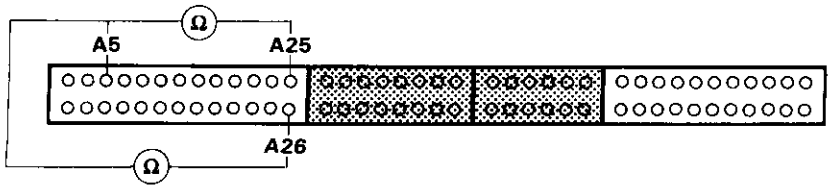

Is the resistance 14-16 Ω?

YES → **Check for loose TCM connectors. If necessary, substitute a known-good solenoid valve assembly or TCM and recheck.**

NO

Disconnect the 3P connector from the shift control solenoid valve assembly.

Check for continuity between the A5 and A25 or A26 terminals.

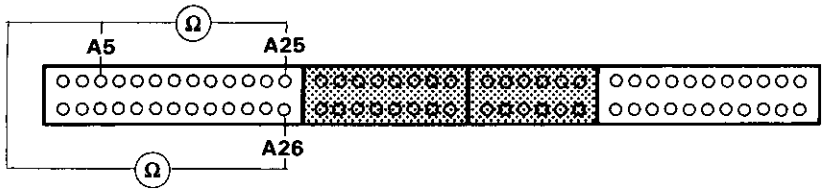

Is there continuity?

YES → **Repair short to ground in BLU/YEL wire between the A5 terminal and the shift control solenoid valve A.**

NO

Measure the resistance of the solenoid at the 3P connector.

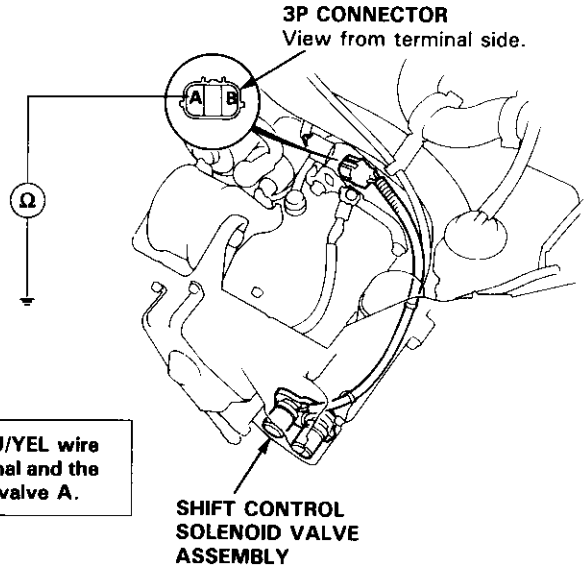

Is the resistance 14—16 Ω?

YES → **Check for open in BLU/YEL wire between the A5 terminal and the shift control solenoid valve A.**

NO

Replace the shift control solenoid valve assembly.

(cont'd)

Troubleshooting Flowchart (cont'd)

Self-diagnosis D4 Indicator light blinks eight times.

Possible Cause
• Disconnected shift control solenoid valve B connector • Short or open in shift control solenoid valve B wire • Faulty shift control solenoid valve B

Turn the ignition switch ON.

Check whether the Malfunction Indicator Lamp (MIL) blinks (see section 11).

Is the MIL blinking?

YES → **Repair the PGM-FI System (see section 11).**

NO

Turn the ignition switch OFF.

Disconnect the 26P and 22P connectors from the TCM.
Connect the Test Harness "A" and "D" connectors to the wire harness only, not to the TCM (see page 14-49).

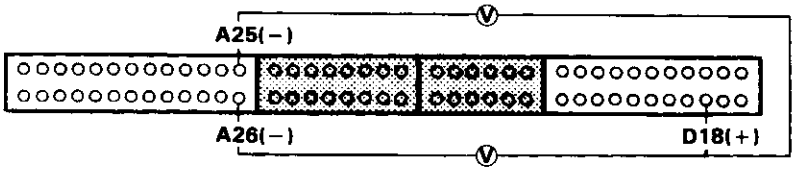

Turn the ignition switch ON.

Measure the voltage between the D18 and A25 or A26 terminals.

Is the voltage 4.75—5.25 V?

NO → **Repair open or short in WHT/BLK wire between the D18 terminal and the ECM.**

YES

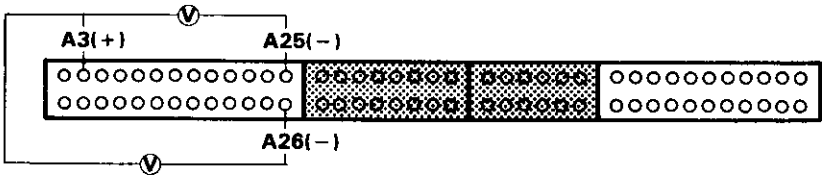

Measure the voltage between the A3 and A25 or A26 terminals.

Is there voltage?

YES → **Repair short to power source in GRN/WHT wire between the A3 terminal and shift control solenoid valve B.**

NO

Turn the ignition switch OFF.

To page 14-65

From page 14-64

Measure the resistance between the A3 and A25 or A26 terminals.

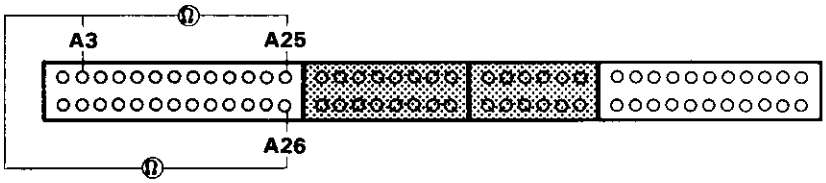

Is the resistance 14-16 Ω?

YES → **Check for loose TCM connectors. If necessary, substitute a known-good solenoid valve assembly or TCM and recheck.**

NO

Disconnect the 3P connector from the shift control solenoid valve assembly.

Check for continuity between the A3 and A25 or A26 terminals.

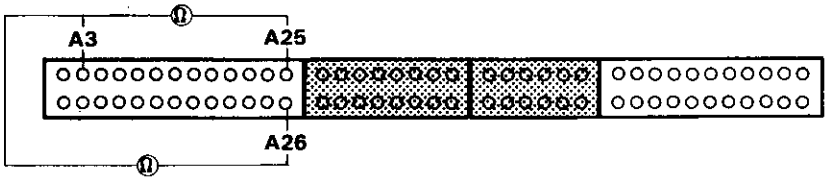

Is there continuity?

YES → **Repair short to ground in GRN/WHT wire between the A3 terminal and the shift control solenoid valve B.**

NO

Measure the resistance of the solenoid at the 3P connector.

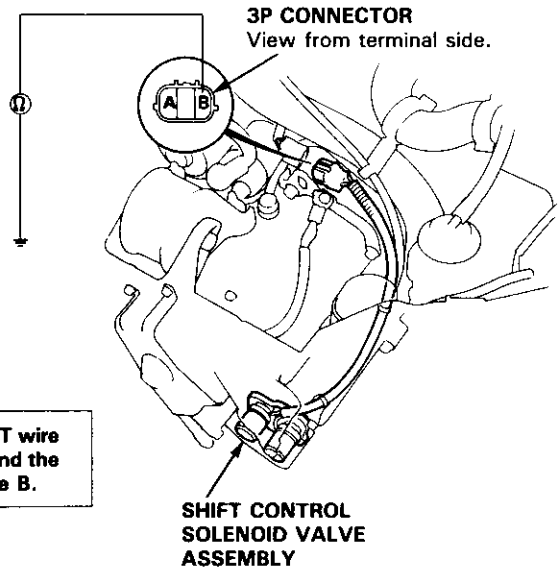

Is the resistance 14-16 Ω?

YES → **Check for open in GRN/WHT wire between the A3 terminal and the shift control solenoid valve B.**

NO

Replace the shift control solenoid valve assembly.

(cont'd)

Troubleshooting Flowchart (cont'd)

Self-diagnosis D4 indicator light blinks nine times.

Possible Cause
• Loose or faulty connection between the TCM and car harness. • Disconnected countershaft speed sensor connector • Short or open in the countershaft speed sensor wire • Faulty countershaft speed sensor

Is the countershaft speed sensor installed properly

NO → **Reinstall and recheck.**

YES

Disconnect the 2P connector from the countershaft speed sensor connector.

Measure the resistance of the countershaft speed sensor.

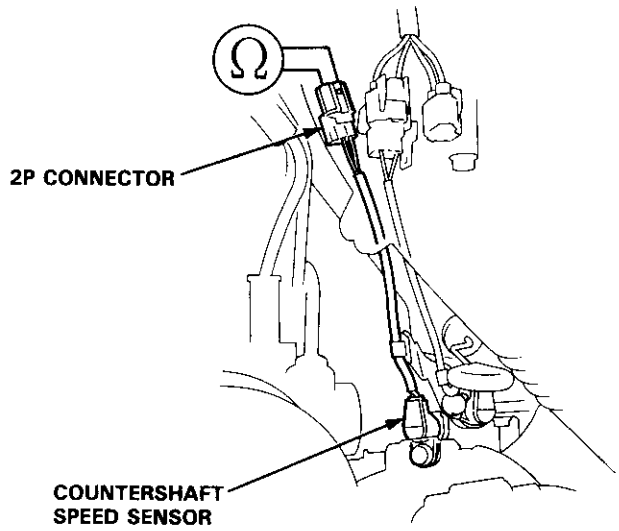

Is the resistance 400–600 Ω?

NO → **Replace the countershaft speed sensor.**

YES

To page 14-67

From page 14-66

Disconnect the 22P connector from the TCM. Connect the Test Harness "D" connector to the wire harness only, not to the TCM (see page 14-49).

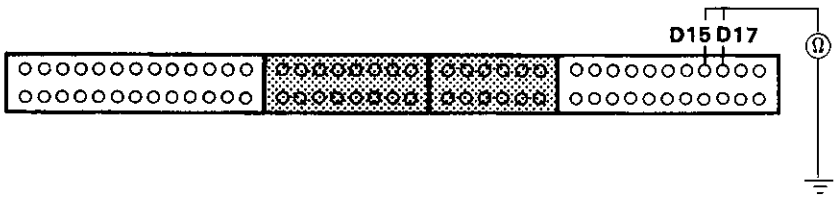

Check for continuity between body ground and D17 terminal and D15 terminal individually.

Is there continuity?

YES → **Repair short in BLU/GRN or BLU/YEL wire between D17 and D15 terminals and the countershaft speed sensor.**

NO

Reconnect the countershaft speed sensor connector.

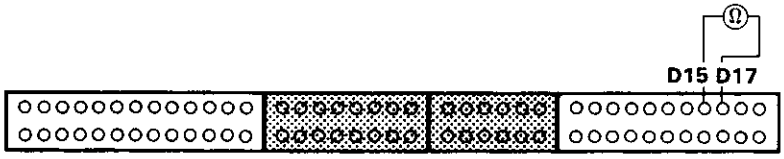

Measure the resistance between D17 and D15 terminals.

Is the resistance 400–600 Ω?

NO → **Repair loose terminal or open in BLU/GRN or BLU/YEL wire between D17 and D15 terminals and the countershaft speed sensor.**

YES

Check for loose TCM connector. If necessary, substitute a known-good TCM and recheck.

(cont'd)

Troubleshooting Flowchart (cont'd)

Self-diagnosis D4 indicator light blinks ten times.

Turn the ignition switch ON.

Check whether the Malfunction Indicator Lamp (MIL) blinks (see section 11).

Is the MIL blinking?

YES → **Repair the PGM-FI System (see section 11).**

NO

Turn the ignition switch OFF.

Disconnect the 26P and 22P connectors from the TCM.
Connect the Test Harness "A" and "D" connectors to the wire harness only, not to the TCM (see page 14-49).

Turn the ignition switch ON.

Measure the voltage between the D18 and A25 or A26 terminals.

Is the voltage 4.75—5.25 V?

NO → **Repair open or short in WHT/BLK wire between the D18 terminal and the ECM.**

YES

Turn the ignition switch OFF.

To page 14-69

Possible Cause
• Disconnected engine coolant temperature (ECT) sensor connector • Short or open in the ECT sensor wire • Faulty ECT sensor

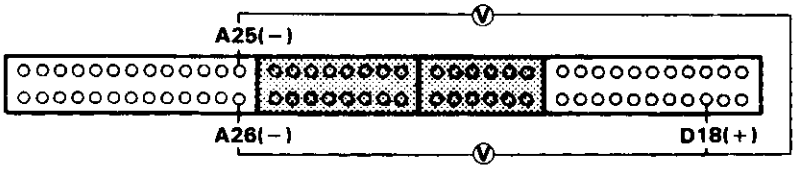

From page 14-68

Connect the Test Harness "A" and "D" connectors to the TCM.

Start the engine and warm it up to normal operating temperature (the radiator fan comes on).

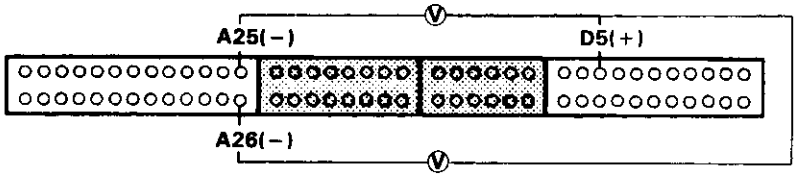

Measure the voltage between the D5 and A25 or A26 terminals.

Is the voltage less than 1V?

NO → **Repair open or short in RED/WHT wire between the D5 terminal and the ECT sensor.**

YES → **Check for loose TCM connectors. If necessary, substitute a known-good TCM and recheck.**

(cont'd)

Troubleshooting Flowchart (cont'd)

Self-diagnosis D4 indicator light blinks eleven times.

Disconnect the 26P connector from the TCM.

Turn the ignition switch ON.

Measure the voltage between the A9 (BLU) and A25 (BRN/BLK) or A26 (BRN/BLK) terminals.

Is there battery voltage?

NO → **Repair open or short in BLU wire between the A9 terminal and the ignition coil.**

YES → **Check for loose TCM connectors. If necessary, substitute a known-good TCM and recheck.**

Possible Cause
• Disconnected ignition coil connector • Short or open in ignition coil wire • Faulty ignition coil

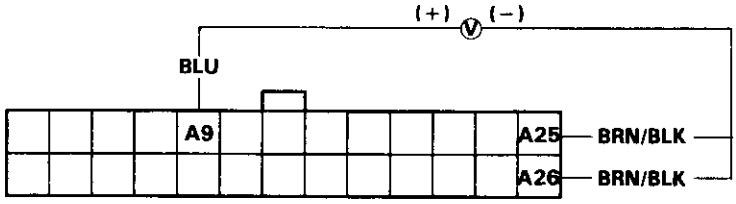

NOTE: View from wire side.

Self-diagnosis D4 indicator light blinks thirteen times.

Possible Cause
• Short or open in LT GRN wire between the D3 terminal and the ECM. • Faulty the barometric pressure (BARO) sensor. NOTE: The BARO sensor is built into the ECM.

Is the Malfunction Indicator Lamp (MIL) on and does it indicate code 13?

YES → Do the TCM Rest Procedure (see page 14-49).

→ Turn the ignition switch ON.

→ Is the MIL on and does it indicate code 13?

YES → **Substitute a known-good ECM and recheck. If symptom/Indication goes away, replace the original ECM.**

NO

NO

Turn the ignition switch OFF.

Disconnect the 26P and 22P connectors from the TCM
Connect the Test Harness "A" and "D" connectors to the wire harness only, not to the TCM (see pare 14-49).

Turn the ignition switch ON.

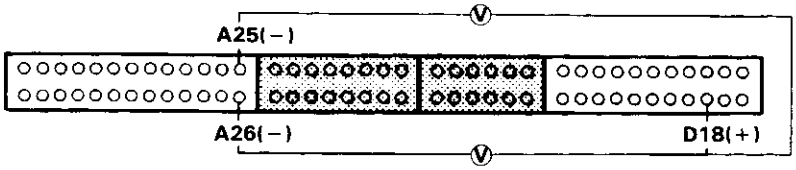

Measure the voltage between the D18 and A25 or A26 terminals.

Is the voltage 4.75—5.25 V?

NO → **Repair open or short in WHT/BLK wire between the D18 terminal and the ECM.**

YES

Turn the ignition swith OFF.

To page 14-72

(cont'd)

Troubleshooting Flowchart (cont'd)

From page 14-71

Disconnect the 22P connectors from the TCM and ECM.

Check for continuity between the D3 (LT GRN) terminal of the TCM 22P connector and the D8 (LT GRN) terminal of the ECM 22P connector.

NOTE: View from wire side.

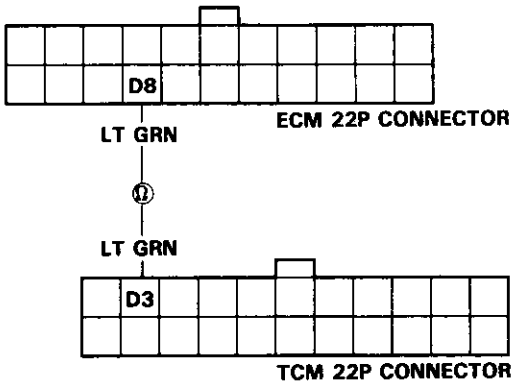

Is there continuity?

- NO → **Repair open in LT GRN wire between the TCM and ECM.**
- YES ↓

Check for continuity between the LT GRN wire and body ground.

Is there continuity?

- YES → **Repair short to body ground in LT GRN wire.**
- NO ↓

Check for loose TCM and ECM connectors. If necessary, substitute a known-good TCM and recheck.

Self-diagnosis D4 indicator light blinks fourteen times.

Possible Cause
• Short or open in FAS (YEL) wire. • Faulty ECM.

Is the Malfunction Indicator Lamp (MIL) on?

YES → **Repair the PGM-FI System (see section 11).**

NO

Start the engine and warm it up to normal operating temperature (the radiator fan comes on).

Shift to P position.

Turn the ignition switch OFF.

Connect the Test Harness between the TCM and connectors (see page 14-49).

Turn the ignition switch ON and wait for at least two seconds.

Measure the voltage between the D16(+) and A25 or A26(−) terminals.

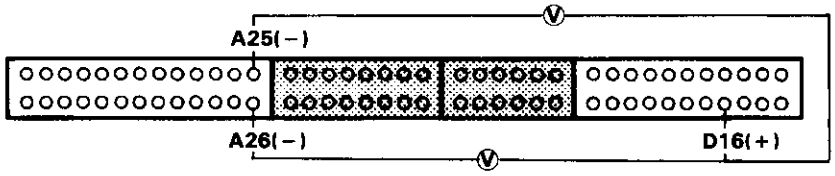

Is there approx. 5 V?

YES → **Check for loose TCM connectors. If necessary, substitute a known-good TCM and recheck.**

NO

Turn the ignition switch OFF.

Disconnect the Test Harness from the TCM.
Leave connected to car harness.

Turn the ignition switch ON.

To page 14-74

(cont'd)

Troubleshooting Flowchart (cont'd)

From page 14-73

Measure the voltage between the D16(+) and A25 or A26(−) terminals.

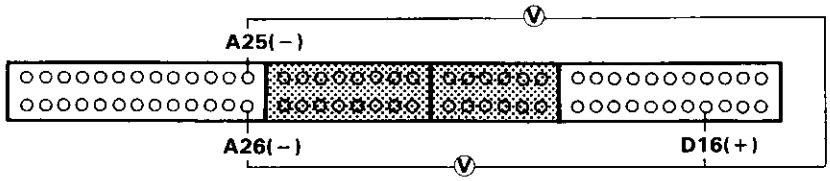

Is there approx. 5 V?

YES → **Check for loose TCM connectors. If necessary, substitute a known-good TCM and recheck.**

NO

Disconnect the 26P connector from the ECM.

Check for continuity between the D16 and A25 or A26 terminals of the Test Harness.

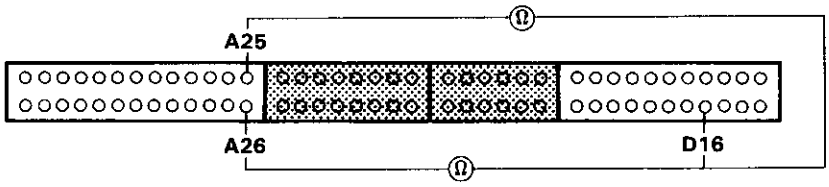

Is there continuity?

YES → **Repair short in YEL (FAS) wire between TCM and ECM.**

NO

Disconnect the 26P and 22P connectors from the Test Harness.

Check for continuity between the D16 (YEL) terminal of TCM 22P connector and A19 (YEL) terminal of ECM 26P connector.

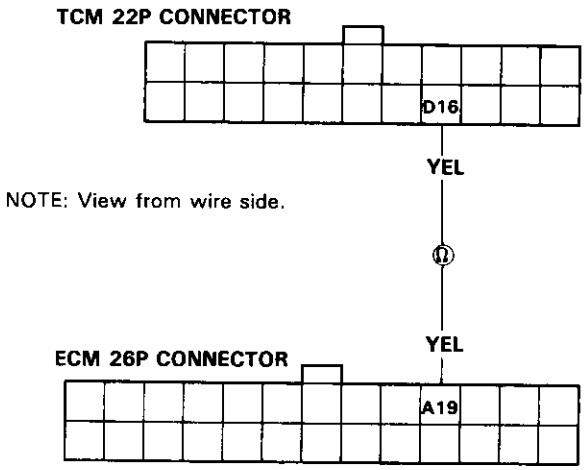

NOTE: View from wire side.

Is there continuity?

YES → **Check for loose TCM connectors. If necessary, substitute a known-good TCM and recheck.**

NO

Repair open in YEL (FAS) wire between TCM and ECM.

Self-diagnosis D4 indicator light blinks fifteen times.

Possible Cause
• Disconnected mainshaft speed sensor connector • Short or open in mainshaft speed sensor wire. • Faulty mainshaft speed sensor.

NOTE:
- A code 15 on the TCM doesn't always mean there's an electrical problem in the mainshaft or countershaft speed sensor circuit; code 15 may also indicate a mechanical problem in the transmission.

Are the mainshaft and countershaft speed sensors installed properly?

NO → **Reinstall and recheck.**

YES

Disconnect the 3P connector from the mainshaft speed sensor.

Measure the resistance of the mainshaft speed sensor.

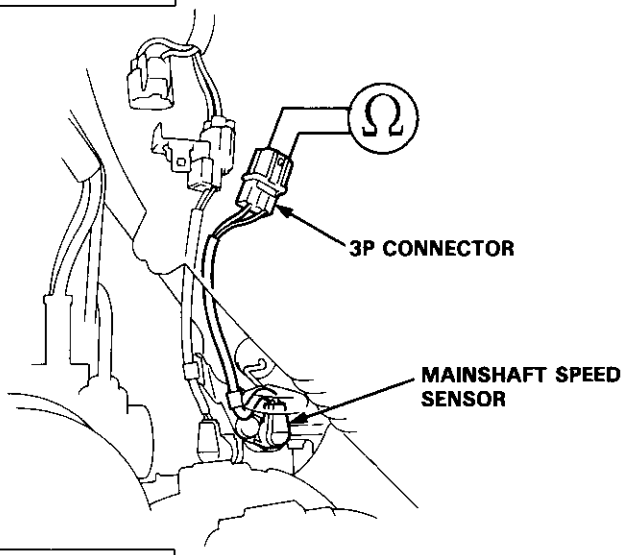

Is the resistance 400–600 Ω?

NO → **Replace the mainshaft speed sensor.**

YES

Disconnect the 22P connector from the TCM.
Connect the Test Harness "D" connector to the wire harness only, not ot the TCM (see page 14-49).

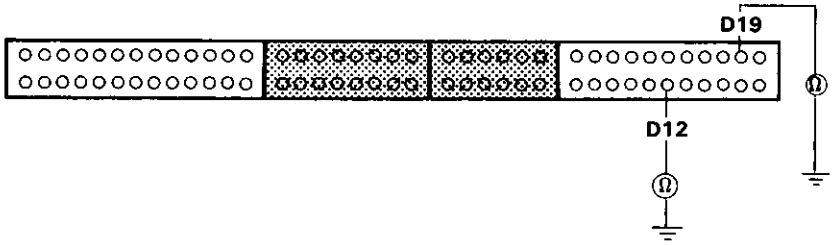

Check the continuity between D19 and D12 terminals and body ground.

Is there continuity?

YES → **Repair short in ORN/BLU or WHT/BLU wires between D19 and D12 terminals and the mainshaft speed sensor.**

NO

Reconnect the 3P connector to the mainshaft speed sensor.

To page 14-76

(cont'd)

Troubleshooting Flowchart (cont'd)

From page 14-75

Measure the resistance between D19 and D12 terminals.

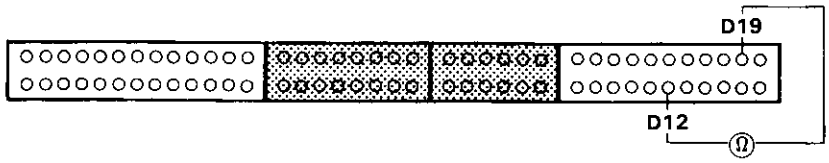

Is the resistance 400–600 Ω?

YES → **Run Electrical Troubleshooting for code 9. Check for loose TCM connectors. If necessary, substitute a known-good TCM and recheck.**

NO

Disconnect the 3P connector from the mainshaft speed sensor.

Check for continuity between D19 terminal and the mainshaft speed sensor connector.

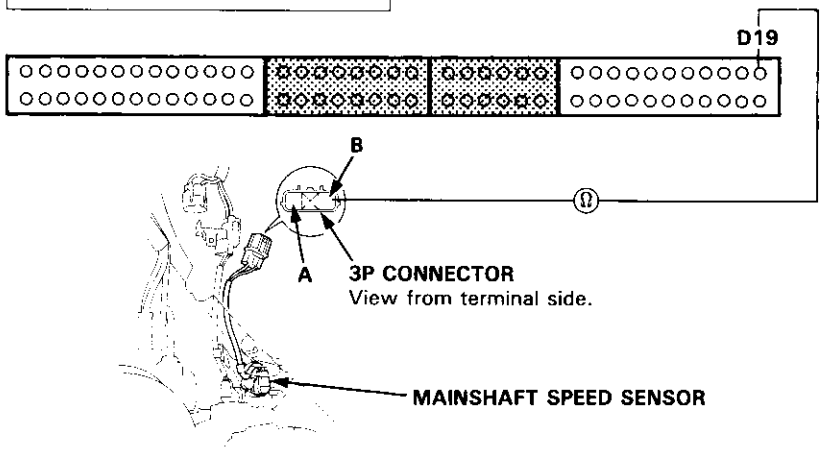

Is there continuity?

NO → **Repair open in ORN/BLU wire between D19 terminal and the mainshaft speed sensor.**

YES

Check for continuity between D12 terminal and the mainshaft speed sensor connector.

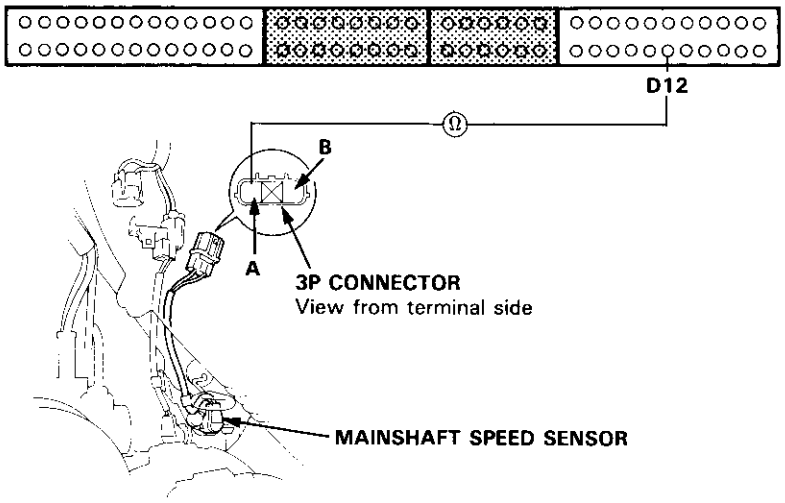

Is there continuity?

NO → **Repair open in WHT/BLU wire between D12 terminal and the mainshaft speed sensor.**

YES

Check for loose TCM connectors. If necessary, substitute a known-good TCM and recheck.

Troubleshooting Flowchart (cont'd)

D4 indicator light does not come on with the ignition switch ON. (It should come on for about 2 seconds.)

Is the service check connector connected with the special tool (SCS Short Connector)?

YES → **Disconnect the special tool from the service check connector and recheck.**

NO

Shift to D4 position.

Does the D4 indicator light come on?

YES → **Check for loose TCM connectors. If necessary, substitute a known-good TCM and recheck.**

NO

Turn the ignition switch OFF.

Disconnect the 26P connector from the TCM.
Connect the Test Harness "A" connector to the wire harness only, not to the TCM (see page 14-49).

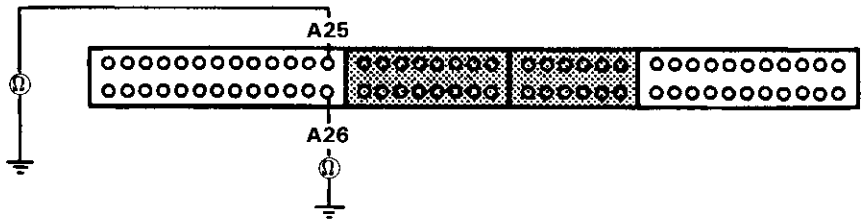

Check for continuity between the A25 terminal and body ground and A26 and body ground.

Is there continuity?

NO → **Repair open BRN/BLK wires between A25 or A26 terminals and G101.**

YES

Turn the ignition switch ON.

Measure the voltage between the A23 or A24 and A25 or A26 terminals.

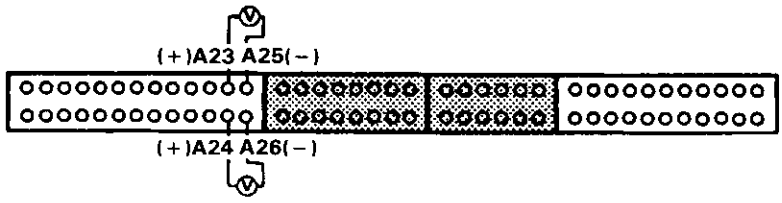

Is there battery voltage?

NO → **Repair open or short in BLK/YEL wire between the A23 and /or A24 terminals and under-hood fuse /relay box.**

YES

Turn the ignition switch OFF.

To page 14-79

From page 14-78

Connect the Test Harness "A" connector to the TCM.

Turn the ignition switch ON. Be sure that voltage is available for 2 seconds between the A8 terminal and A25 or A26 terminal.

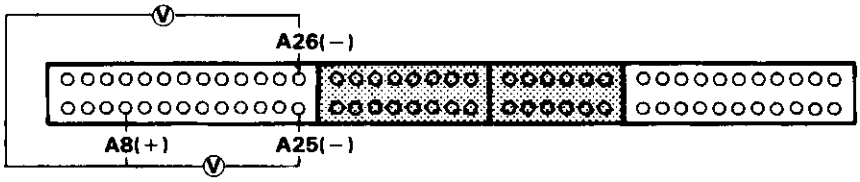

Is there voltage?

YES → **Check for open or short in GRN/BLK wire between the A8 terminal and the gauge assembly.**

NO

Turn the ignition switch OFF.

Disconnect the Test Harness "A" connector from the TCM.

Check for continuity between the A8 terminal and the GRN/BLK wire at the gauge assembly (see section 23).

Is there continuity ?

NO → **Repair open in GRN/BLK wire between the A8 terminal and the gauge assembly.**

YES

Check for loose TCM connectors. Check the A/T gear position switch. If necessary, substitute a known-good TCM and recheck.

(cont'd)

Troubleshooting Flowchart (cont'd)

Inspection of the A/C signal.

Start the engine.

Turn the blower switch ON.

Push the A/C switch ON.

Does A/C compressor clutch engage?

NO → **See Air Conditioning inspection (see section 22).**

YES

Stop the engine.

Disconnect the 26P connector from the TCM.

Start the engine.

Measure the voltage between the A22 (BLK/RED) and A25 (BRN/BLK) or A26 (BRN/BLK) terminals. (A/C compressor OFF)

Is there battery voltage?

NO → **Repair open in BLK/RED wire between the A22 terminal and A/C compressor clutch relay.**

YES

- **A/C signal is OK.**
- **Check for loose TCM connectors. If necessary, substitute a known-good TCM and recheck.**
- **Inspect the air conditioning (see section 22).**

Symptom
• Lock-up clutch does not have duty operation (ON↔OFF). • Lock-up clutch does not engage.

NOTE: View from wire side.

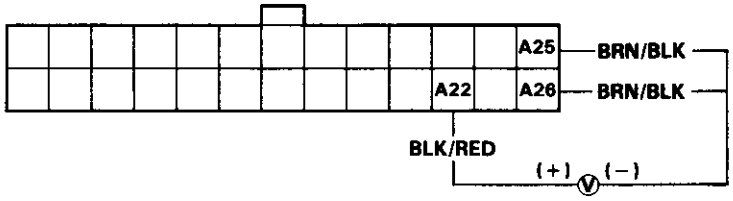

Inspection of the brake switch signal.

Symptom
Shift lever cannot be moved from [P] position with the brake pedal depressed.

Check that the brake lights come on with the brake pedal depressed.

Are brake lights ON?

NO → **Repair faulty brake switch circuits (see section 23).**

YES

Disconnect the 26P and 22P connectors from the TCM.
Connect the Test Harness "A" and "D" connectors to the wire harness only, not to the TCM (see page 14-49).

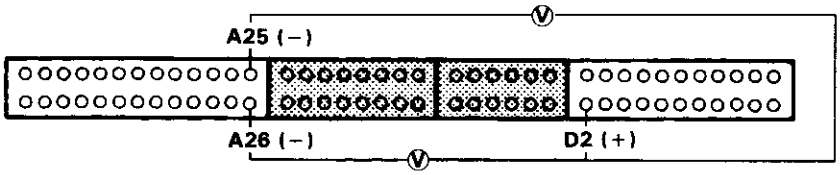

Measure the voltage between the D2 and A25 or A26 terminals with the brake pedal depressed.

Is there battery voltage?

NO → **Repair open in GRN/WHT wire between the D2 terminal and brake switch.**

YES

- **Brake switch signal OK.**
- **Check for loose TCM connectors. If necessary, substitute a known-good TCM and recheck.**
- **Inspect the brake switch circuit (see section 23).**

Lock-up Control Solenoid Valve A/B

Test

NOTE: Lock-up control solenoid valves A and B must be removed/replaced as an assembly.

1. Disconnect 2P connector from the lock-up control solenoid valve A/B.

2. Measure the resistance between the No. 1 terminal (solenoid valve A) of the lock-up control solenoid valve connector and body ground, and between the No. 2 terminal (solenoid valve B) and body ground.

   STANDARD: 14—16 Ω

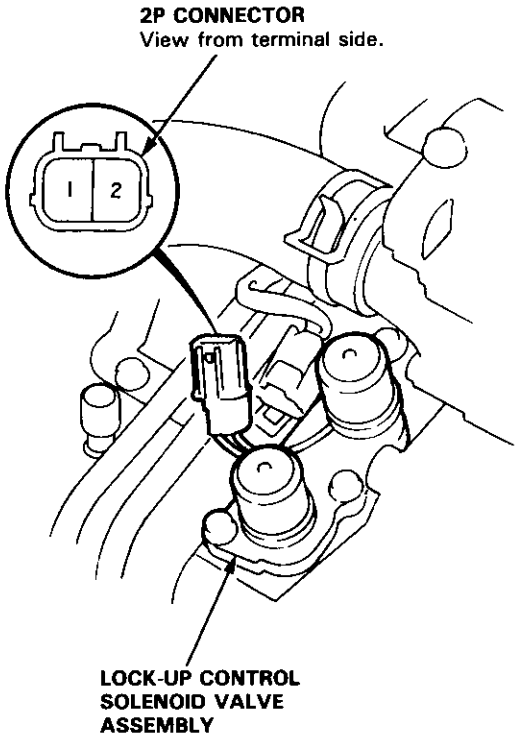

3. Replace the lock-up control solenoid valve assembly if the resistance is out of specification.

4. If the resistance is within the standard, connect the No. 1 terminal of the lock-up control solenoid valve connector to the battery positive terminal. A clicking sound should be heard. Connect the No. 2 terminal to the battery positive terminal. A clicking sound should be heard. Replace the lock-up control solenoid valve assembly if no clicking sound is heard.

Replacement

1. Remove the mounting bolts and lock-up control solenoid valve assembly.

   NOTE: Be sure to remove or replace the lock-up control solenoid valves A and B as an assembly.

2. Check the lock-up control solenoid valve oil passages for dust or dirt, and replace as an assembly, if necessary.

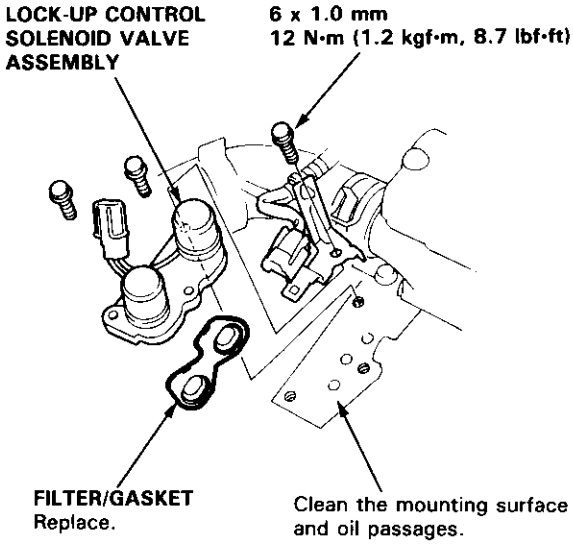

3. Clean the mounting surface and oil passages of the lock-up control solenoid valve assembly, and install a new filter/gasket.

4. Check the connector for rust, dirt or oil and reconnect it securely.

Shift Control Solenoid Valve A/B

Test

NOTE: Shift control solenoid valves A and B must be removed/replaced as an assembly.

1. Disconnect 3P connector from the shift control solenoid valve A/B.

2. Measure the resistance between the No. 1 terminal (solenoid valve A) of the shift control solenoid valve connector and body ground, and between the No. 2 terminal (solenoid valve B) and body ground.

   STANDARD: 14–16 Ω

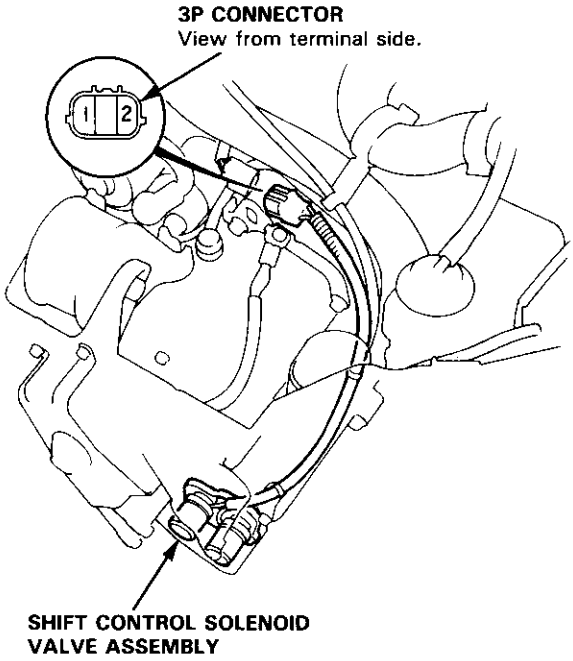

3. Replace the shift control solenoid valve assembly if the resistance is out of specificaiton.

4. If the resistance is within the standard, connect the No. 1 terminal of the shift control solenoid valve connector to the battery positive terminal. A clicking sound should be heard. Connect the No. 2 terminal to the battery positive terminal. A clicking sound should be heard. Replace the shift control solenoid valve assembly if no clicking sound is heard.

Replacement

1. Remove the shift control solenoid valve assembly protector.

2. Remove the mounting bolts and shift control solenoid valve assembly.

   NOTE: Be sure to remove or replace the shift control solenoid valves A and B as an assembly.

3. Check the shift control solenoid valve oil passages for dust or dirt, and replace as an assembly, if necessary.

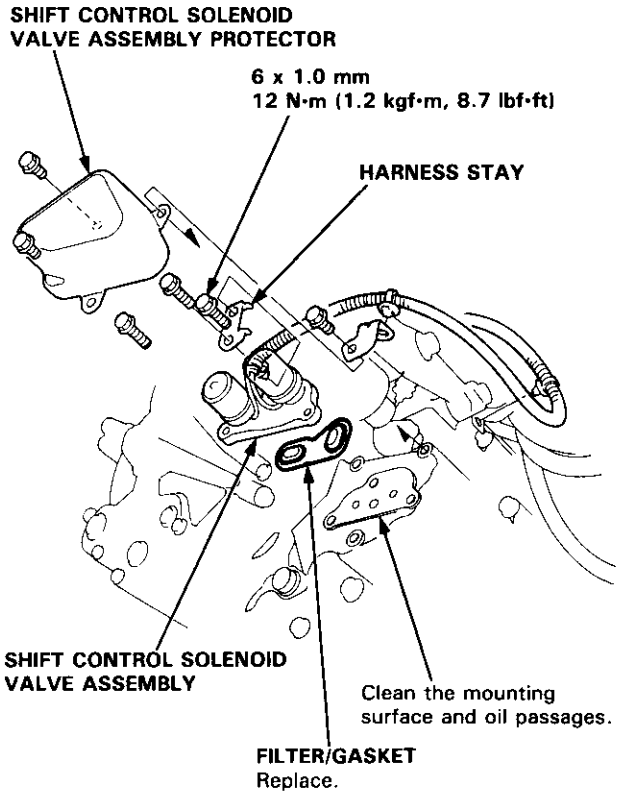

4. Clean the mounting surface and oil passages of the shift control solenoid valve assembly, and install a new filter/gasket.

5. Check the connector for rust, dirt or oil, and reconnect it securely.

Transmission Control Module

Replacement

- The Transmission Control Module (TCM) is located below the dashboard, behind the left side kick panel on the driver's side.

CAUTION:
- **All SRS electrical wiring harnesses are covered with yellow insulation.**
- **Before disconnecting any part of the SRS wire harness, connect the short connectors (see page 23-70).**
- **Replace the entire affected SRS harness assembly if it has an open circuit or damaged wiring.**

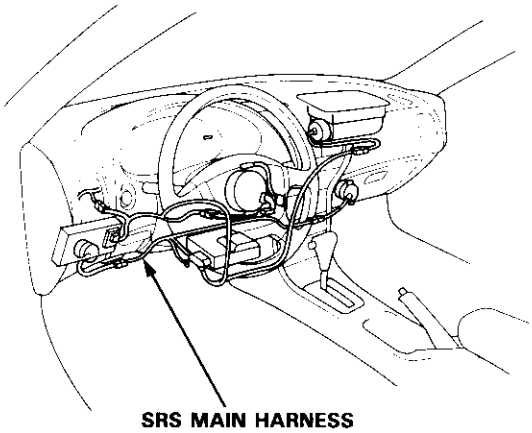

1. Remove two clips securing the kick panel then remove it.

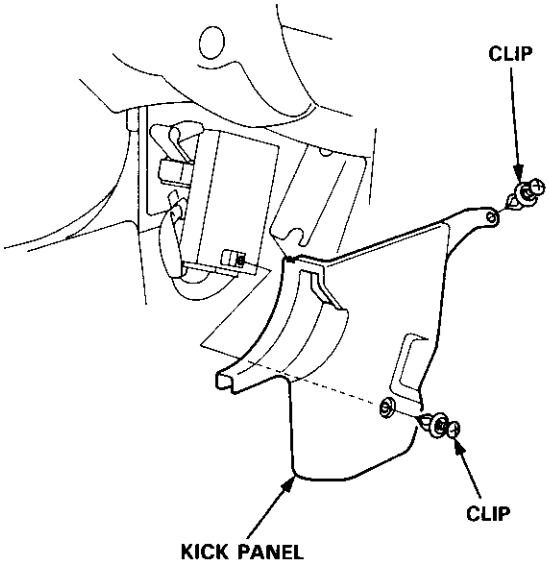

2. Disconnect the connectors and remove the TCM.

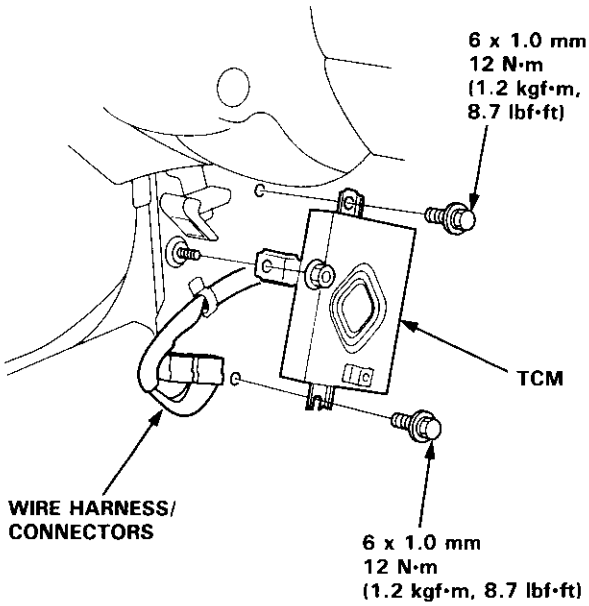

Mainshaft/Countershaft Speed Sensors

Replacement

1. Disconnect the speed sensor connectors, then remove the harness clamp on the countershaft speed sensor harness from the harness stay.

2. Remove the 6 mm bolts securing the mainshaft and countershaft speed sensors from the transmission housing.

3. Remove the mainshaft and countershaft speed sensors.

4. Install the mainshaft and countershaft speed sensors in the reverse order of the removal.

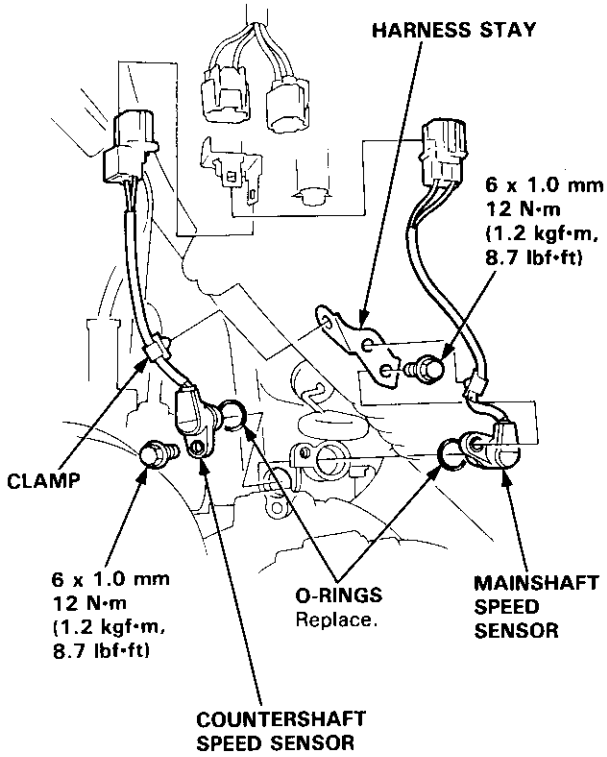

Symptom-to-Component Chart

Hydraulic System

SYMPTOM	Check these items on the PROBABLE CAUSE List	Check these items on the NOTES List
Engine runs, but car does not move in any gear.	1, 6, 7, 16	K, L, R, S
Car moves in [R] and [2], but not in [D3], [D4] or [1] position.	8, 29, 44, 48	C, M, O
Car moves in [D3], [D4], [1], [R], but not in [2] position.	9, 30, 49	C, L
Car moves in [D3], [D4], [2], [1], but not in [R] position.	1, 11, 22, 34, 38, 39, 40	C, L, Q
Car moves in [N] position.	1, 8, 9, 10, 11, 46, 47	C, D
Excessive idle vibration.	5, 17	B, K, L
Slips in all gears.	6, 7, 16	C, L
No engine braking in [1] position.	12	C, D, L
Slips in 1st gear.	8, 29, 44, 48	C, N, O
Slips in 2nd gear.	9, 20, 23, 30, 49	C, L
Slips in 3rd gear.	10, 21, 23, 31, 49	C, L
Slips in 4th gear.	11, 23, 32, 44	C, L, N
Slips in reverse gear.	11, 32, 34, 44	C, N
Flares on 1–2 upshift.	3, 15, 23	E, L, V
Flares on 2–3 upshift.	3, 15, 23, 24, 49	E, L, V
Flares on 3–4 upshift.	3, 15, 23, 25, 49	E, L, N, V
No upshift; transmission stays in 1st gear.	14, 19, 23	G, L
No downshift to 1st gear.	12, 19	G, L
Late upshift.	14	L, V
Erratic shifting.	2, 14, 26	V
Harsh shift (up and down shifting).	2, 4, 15, 23, 24, 25, 26, 27, 47	A, E, H, I, L, V
Harsh shift (1–2).	2, 9, 15, 23	C, D, E, V
Harsh shift (2–3).	2, 10, 15, 23, 24	C, D, E, H, L, V
Harsh shift (3–4).	2, 11, 15, 23, 25	C, D, E, I, L, V
Harsh kick-down shifts.	2, 15, 23, 26, 27, 28	E, L, Q, V
Harsh kick-down shift (2–1).	48	O
Harsh downshift at closed throttle.	2, 15, 23	E, T
Harsh shift when manually shifting to [1] position.	33	L
Axle(s) slips out of transmission on turns.	43, 50	L, P, Q
Axle(s) stuck in transmission.	43	L, Q
Ratcheting noise when shifting into [R] position.	6, 7, 38, 39, 40	K, L, Q
Loud popping noise when taking off in [R] position.	38, 39, 40	L, Q
Ratcheting noise when shifting from [R] to [P] position or from [R] to [N] position.	38, 39, 40, 45	L, Q
Noise from transmission in all selector lever positions.	6, 17	K, L, Q
Noise from transmission only when wheels are rolling.	39, 42	L, Q
Gear whine, rpm related (pitch changes with shifts).	8, 13, 41	K, L, Q
Gear whine, speed related (pitch changes with speed).	38, 42	L, Q
Transmission will not shift into 4th gear in [D4] position	1, 21, 28, 32	L
Lock-up clutch does not lock-up smoothly.	17, 36, 37	L
Lock-up clutch does not operate properly.	2, 3, 14, 15, 18, 35, 36, 37	E, L, V
Transmission has multitude of problems shifting. At disassembly, large particles of metal are found on magnet.	43	L, Q

PROBABLE CAUSE	
1.	Shift cable broken/out of adjustment.
2.	Throttle cable too short.
3.	Throttle cable too long.
4.	Wrong type ATF.
5.	Idle rpm too low/high.
6.	Oil pump worn or binding.
7.	Pressure regulator stuck.
8.	1st clutch defective.
9.	2nd clutch defective.
10.	3rd clutch defective.
11.	4th clutch defective.
12.	1st-hold clutch defective.
13.	Mainshaft worn/damaged.
14.	Modulator valve stuck.
15.	Throttle valve B stuck.
16.	ATF strainer clogged.
17.	Torque converter defective.
18.	Torque converter check valve stuck.
19.	1—2 shift valve stuck.
20.	2—3 shift valve stuck.
21.	3—4 shift valve stuck.
22.	Servo control valve stuck.
23.	Clutch pressure control (CPC) valve stuck.
24.	2—3 orifice control valve stuck.
25.	Orifice control valve stuck.
26.	3—2 kick-down valve stuck.
27.	4—3 kick-down valve stuck.
28.	4th exhaust valve stuck.
29.	1st accumulator defective.
30.	2nd accumulator defective.
31.	3rd accumulator defective.
32.	4th accumulator defective.
33.	1st-hold accumulator defective.
34.	Servo valve stuck.
35.	Lock-up timing B valve stuck.
36.	Lock-up shift valve stuck.
37.	Lock-up control valve stuck.
38.	Shift fork bent.
39.	Reverse gears worn/damaged (3 gears).
40.	Reverse selector worn.
41.	3rd gears worn/damaged (2 gears).
42.	Final gears worn/damaged (2 gears).
43.	Differential pinion shaft worn.
44.	Feedpipe O-ring broken.
45.	4th gears worn/damaged (2 gears).
46.	Gear clearance incorrect.
47.	Clutch clearance incorrect.
48.	One-way (sprag) clutch defective.
49.	Sealing rings/guide worn.
50.	Axle-inboard joint clip missing.

(cont'd)

Hydraulic System (cont'd)

The following symptoms can be caused by improper repair or assembly	Check these items on the PROBABLE CAUSE DUE TO IMPROPER REPAIR List	Items on the NOTES List
Car creeps in [N] position.	R1, R2	
Car does not move in [D3] or [D4] position.	R4	
Transmission locks up in [R] position.	R3, R12	
Excessive drag in transmission.	R6	K, R
Excessive vibration, rpm related.	R7	
Noise with wheels moving only	R5	
Main seal pops out.	R8	S
Various shifting problems.	R9, R10	
Harsh upshifts.	R11	

PROBABLE CAUSE DUE TO IMPROPER REPAIR	
R1.	Improper clutch clearance.
R2.	Improper gear clearance.
R3.	Parking brake lever installed upside down.
R4.	One-way (sprag) clutch installed upside down.
R5.	Reverse selector hub installed upside down.
R6.	Oil pump binding.
R7.	Torque converter not fully seated in oil pump.
R8.	Main seal improperly installed.
R9.	Springs improperly installed.
R10.	Valves improperly installed.
R11.	Ball check valves not installed.
R12.	Shift fork bolt not installed.

NOTES	
A.	See flushing procedure, page 14-168 and 169.
B.	Set idle rpm in gear to specified idle speed. If still no good, adjust motor mounts as outlined in engine section of service manual.
C.	If the large clutch piston O-ring is broken, inspect the piston groove for rough machining.
D.	If the clutch pack is seized or is excessively worn, inspect the other clutches for wear, and check the orifice control valves and throttle valves for free movement.
E.	If throttle valve B is stuck, inspect the clutches for wear.
G.	If the 1—2 shift valve is stuck closed, the transmission will not upshift. If stuck open, the transmission has no 1st gear.
H.	If the 2—3 orifice control valve is stuck, inspect the 2nd and 3rd clutch packs for wear.
I.	If the orifice control valve is stuck, inspect the 3rd and 4th clutch packs for wear.
J.	If the clutch pressure control valve is stuck closed, the transmission will not shift out of 1st gear.
K.	Improper alignment or main valve body and torque converter housing may cause oil pump seizure. The symptoms are mostly an rpm-related ticking noise or a high-pitched squeak.
L.	If the ATF strainer is clogged with particles of steel or aluminum, inspect the oil pump and differential pinion shaft. If both are OK and no cause for the contamination is found, replace the torque converter.
M.	If the 1st clutch feedpipe guide in the right side cover is scored by the mainshaft, inspect the ball bearing for excessive movement in the transmission housing. If OK, replace the right side cover as it is dented. The O-ring under the guide is probably worn.
N.	• Replace the mainshaft if the bushing for the 4th feedpipe is loose or damaged. If the 4th feedpipe is damaged or out of round, replace the right side cover. • Replace the sub-shaft if the bushing for the 1st-hold feedpipe is loose or damaged. If the 1st-hold feedpipe is damaged or out of round, replace it. • Replace the mainshaft if the bushing for the 1st feedpipe is loose or damaged. If the 1st feedpipe is damaged or out of round, replace it.
O.	A worn or damaged sprag clutch is mostly a result of shifting the transmission in $\boxed{D_3}$ or $\boxed{D_4}$ position while the wheels rotate in reverse, such as rocking the car in snow.
P.	Inspect the frame for collision damage.
Q.	Inspect for damage or wear: 1. Reverse selector gear teeth chamfers. 2. Engagement teeth chamfers of countershaft 4th and reverse gear. 3. Shift fork for scuff marks in center. 4. Differential pinion shaft for wear under pinion gears. 5. Bottom of 3rd clutch for swirl marks. Replace items 1, 2, 3 and 4 if worn or damaged. If transmission makes clicking, grinding or whirring noise, also replace mainshaft 4th gear and reverse idler gear and countershaft 4th gear in addition to 1, 2, 3 or 4. If differential pinion shaft is worn, overhaul differential assembly, and replace ATF strainer, and thoroughly clean transmission, flush torque converter, cooler and lines. If bottom of 3rd clutch is swirled and transmission makes gear noise, replace the countershaft and final driven gear.
R.	Be very careful not to damage the torque converter housing when replacing the main ball bearing. You may also damage the oil pump when you torque down the main valve body. This will result in oil pump seizure if not detected. Use proper tools.
S.	Install the main seal flush with the torque converter housing. If you push it into the torque converter housing until it bottoms out, it will block the oil return passage and result in damage.
T.	Harsh downshifts when coasting to a stop with zero throttle may be caused by a bent-in throttle valve retainer/cam stopper. Throttle cable adjustment may clear this problem.
V.	Throttle cable adjustment is essential for proper operation of the transmission. Not only does it affect the shift points if misadjusted, but also the shift quality and lock-up clutch operation. A cable adjusted too long will result in throttle pressure being too low for the amount of engine torque input into the transmission and may cause clutch slippage. A cable adjusted too short will result in too high throttle pressure which may cause harsh shifts, erratic shifts and torque converter hunting.

NOTE: Warm up the engine to operating temperature (the cooling fan comes on).

1 Apply parking brake and block the wheels. Start the engine, them move the selector lever to [D4] position while depressing the brake pedal. Depress the accelerator pedal, and release it suddenly. The engine should not stall.

2. Repeat same test in [D3] position.

3. Shift the selector lever to [D4] position, and check that the shift points occur at approximate speeds shown. Also check for abnormal noise and clutch slippage.

NOTE: Throttle position sensor voltage represents the throttle opening.

—1. Connect the Test Harness between the ECM and connector (see section 11).
—2. Set the digital multimeter to check voltage between D11 (+) terminal and D22 (—) terminal for the throttle position sensor.

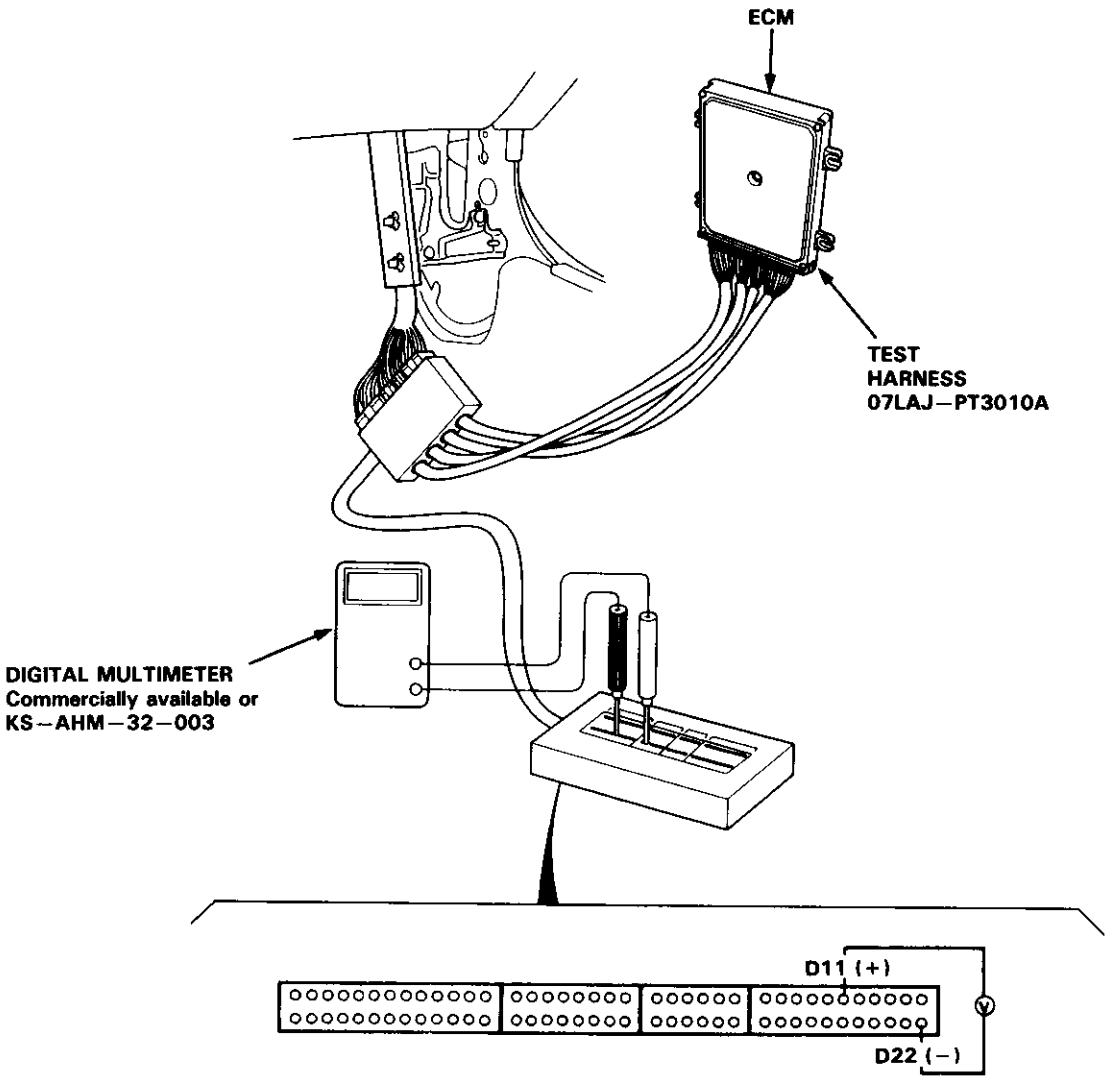

D4 or D3 Position

- Upshift

Throttle Opening	Unit of speed	1st→2nd	2nd→3rd	3rd→4th
Throttle position sensor voltage: 0.75 V	mph	11–12	20–22	27–30
	Km/h	17.0–19.0	32.5–35.5	43.5–48.5
Throttle position sensor voltage: 2.5 V	mph	21–23	35–39	55–59
	Km/h	33.5–36.5	57.0–63.0	89.0–95.0
Full-opened throttle	mph	30–34	62–65	98–101
	Km/h	49.0–55.0	99.0–105.0	157.0–163.0

- Downshift

Throttle Opening	Unit of speed	4th→3rd	3rd→2nd	2nd→1st
Full-closed throttle	mph	18–21	6–9 (3rd→1st)	——
	Km/h	29.0–33.0	10–14 (3rd→1st)	——
Full-opened throttle	mph	85–89	54–58	23–27
	Km/h	137.0–143.0	87.0–93.0	37.0–43.0

- Lock-up

Throttle Opening	Unit of speed	D4 Position	
		Lock-up control solenoid valve A ON	Lock-up control solenoid valve B ON
Throttle position sensor voltage: 2.5 V	mph	13–16	17–20
	km/h	21.0–25.0	28.0–32.0
Full-opened throttle	mph	92–96	92–96
	km/h	148.0–154.0	148.0–154.0

Throttle Opening	Unit of speed	D3 Position	
		Lock-up control solenoid valve A ON	Lock-up control solenoid valve B ON
Throttle position sensor voltage: 1.0 V	mph	61–63	61–63
	km/h	98–102	98–102
Full-opened throttle	mph	85–89	85–89
	km/h	137–143	137–143

4. Accelerate to about 35 mph (57 km/h) so the transmission is in 4th, then shift from D4 position to 2 position. The car should immediately begin slowing down from engine braking.

   CAUTION: Do not shift from D4 or D3 position to 2 or 1 position at speeds over 100 mph (160 km/h); you may damage the transmission.

5. Check for abnormal noise and clutch slippage in the following positions.

   1 (1st Gear) Position
   –1. Accelerate from a stop at full throttle. Check that there is no abnormal noise or clutch slippage.
   –2. Upshifts should not occur with the selector in this position.
   2 (2nd Gear) Position.
   –1. Accelerate from a stop at full throttle. Check that there is no abnormal noise or clutch slippage.
   –2. Upshifts and downshifts should not occur with the selector in this position.
   R (Reverse) Position
   Accelerate from a stop at full throttle, and check for abnormal noise and clutch slippage.

6. Test in P (Parking) Position
   Park car on slope (approx. 16°), apply the parking brake, and shift into P position. Release the brake; the car should not move.

Stall Speed

Test

CAUTION:

- **To prevent transmission damage, do not test stall speed for more than 10 seconds at a time.**
- **Do not shift the lever while raising the engine speed.**
- **Be sure to remove the pressure gauge before testing stall speed.**

1. Engage the parking brake and block all four wheels.
2. Connect the tachometer, and start the engine.
3. Make sure the A/C switch is OFF.
4. After the engine has warmed up to normal operating temperature (the cooling fan comes on), shift into [2] position.
5. Fully depress the brake pedal and accelerator for 6 to 8 seconds, and note engine speed.
6. Allow 2 minutes for cooling, then repeat the test in [1], [D4] and [R] positions.

NOTE:

- Stall speed tests should be used for diagnostic purposes only.
- Stall speed should be the same in [D4], [2], [1] and [R] positions.

Stall Speed RPM: rpm
Specification: 2,400 rpm
Service Limit: 2,200–2,600 rpm

TROUBLE	PROBABLE CAUSE
Stall rpm high in [D4], [2], [1] and [R] position	• Low fluid level or oil pump output • Clogged ATF strainer • Pressure regulator valve stuck closed • Slipping clutch
Stall rpm high in [1] position	• Slippage of 1st clutch, 1st-hold clutch or 1st gear one-way clutch
Stall rpm high in [2] position	• Slippage of 2nd clutch
Stall rpm high in [D4] position	• Slippage of 1st clutch, 1st gear one-way clutch
Stall rpm high in [R] position	• Slippage of 4th clutch
Stall rpm low in [D4], [2], [1] and [R] position	• Engine output low • Torque converter one-way clutch slipping

Fluid Level

Checking/Changing

Checking

NOTE: Check the fluid level with the engine at normal operating temperature (the cooling fan comes on).

1. Park the car on level ground. Shut off the engine.
2. Remove the dipstick (yellow loop) from the transmission, and wipe it with a clean cloth.
3. Insert the dipstick into the transmission.

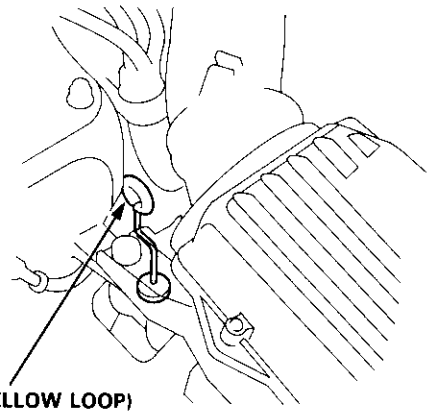

4. Remove the dipstick and check the fluid level. It should be between the upper and lower marks.

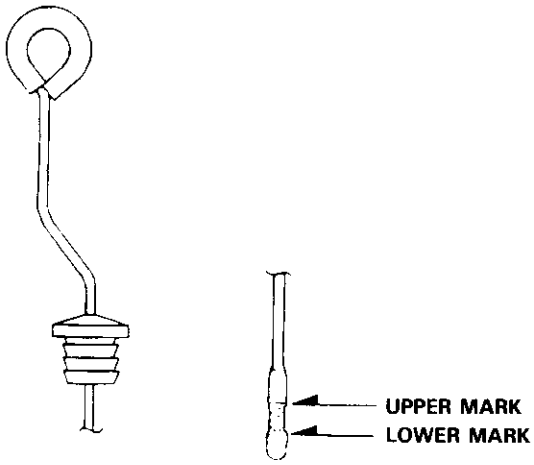

5. If the level is below the lower mark, add fluid into the tube to bring it to the upper mark. Use Honda Premium Formula Automatic Transmission Fluid or an equivalent DEXRON® II Automatic Transmission Fluid (ATF) only.
6. Insert the dipstick back into the transmission.

Changing

1. Bring the transmission up to operating temperature by driving the car. Park the car on level ground, turn the engine off, then remove drain plug.

   NOTE: If a cooler flusher is to be used, see page 14-168 and 169.

2. Reinstall the drain plug with a new sealing washer, then refill the transmission to the upper mark on the dipstick.

   Automatic Transmission Fluid Capacity:
   2.7 ℓ (2.9 US qt, 2.4 Imp qt) at change
   5.9 ℓ (6.2 US qt, 5.2 Imp qt) at overhaul

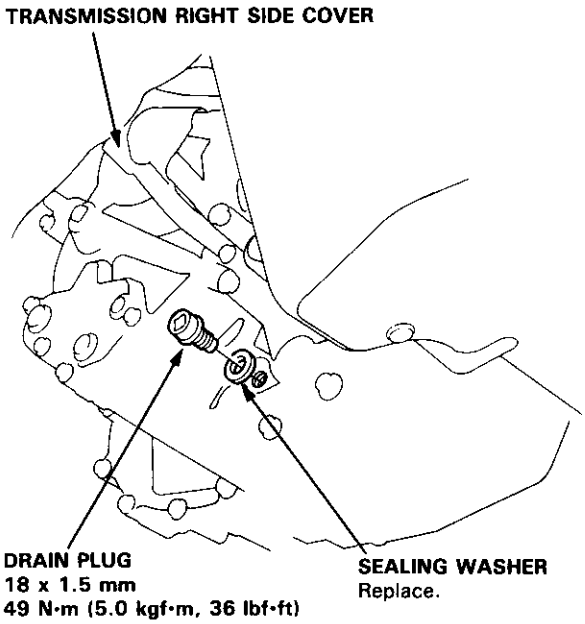

Pressure Testing

⚠ WARNING

- **While testing, be careful of the rotating front wheels.**
- **Make sure lifts, jacks, and safety stands are placed properly (see section 1).**

CAUTION: Before testing, be sure the transmission fluid is filled to the proper level.

1. Raise the car (see section 1).
2. Warm up the engine (the cooling fan comes on), then stop the engine and connect a tachometer.
3. Connect the oil pressure gauge to each inspection hole(s).

   TORQUE: 18 N·m (1.8 kgf·m, 13 lbf·ft)

   CAUTION: Connect the oil pressure gauge securely; be sure not to allow dust and other foreign particles to enter the inspection hole.

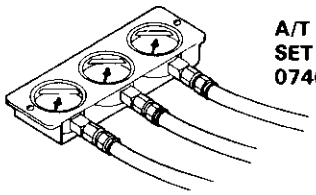

A/T OIL PRESSURE GAUGE SET W/PANEL
07406–0020400

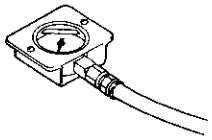

A/T LOW PRESSURE GAUGE W/PANEL
07406–0070300

A/T OIL PRESSURE HOSE, 2210 mm
07MAJ–PY4011A
(4 Required)

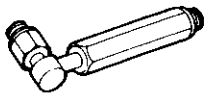

A/T OIL PRESSURE HOSE ADAPTER
07MAJ–PY40120
(4 Required)

NOTE: Use the A/T Oil Pressure Gauge Set (07406–0020003) or A/T Low Pressure Gauge (07406–0070000), and the oil pressure gauge hoses and adapters shown above.

4. Start the engine, and measure the respective pressure as follows.
   - Line Pressure
   - Clutch Pressure
   - Clutch Low/High Pressure
   - Throttle B Pressure
5. Install a new washer and the sealing bolt in the inspection hole and tighten to the specified torque.

   TORQUE: 18 N·m (1.8 kgf·m, 13 lbf·ft)

   NOTE: Do not reuse old aluminum washers.

- **Line Pressure Measurement**

–1. Set the parking brake and block both rear wheels securely.

–2. Run the engine at 2,000 rpm.

–3. Shift the select lever to [N] or [P] position.

–4. Measure line pressure.

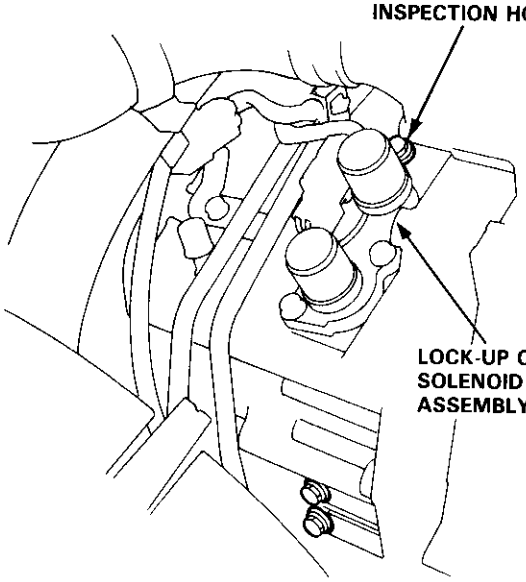

PRESSURE	SELECTOR POSITION	SYMPTOM	PROBABLE CAUSE	FLUID PRESSURE	
				Standard	Service Limit
Line	[N] or [P]	No (or low) line pressure	Torque converter, oil pump, pressure regulator, torque converter check valve	830–880 kPa (8.5–9.0 kgf/cm², 120–130 psi)	780 kPa (8.0 kgf/cm², 110 psi)

NOTE: Higher pressures may be indicated if measurements are made in selector positions other than [N] or [P] position.

- **Clutch Pressure Measurement**

⚠ WARNING While testing, be careful of the rotating front wheels.

—1. Set the parking brake and block both rear wheels securely.
—2. Raise the front of the car and support with safety stands.
—3. Allow the front wheels to rotate freely.
—4. Run the engine at 2,000 rpm.
—5. Measure each clutch pressure.

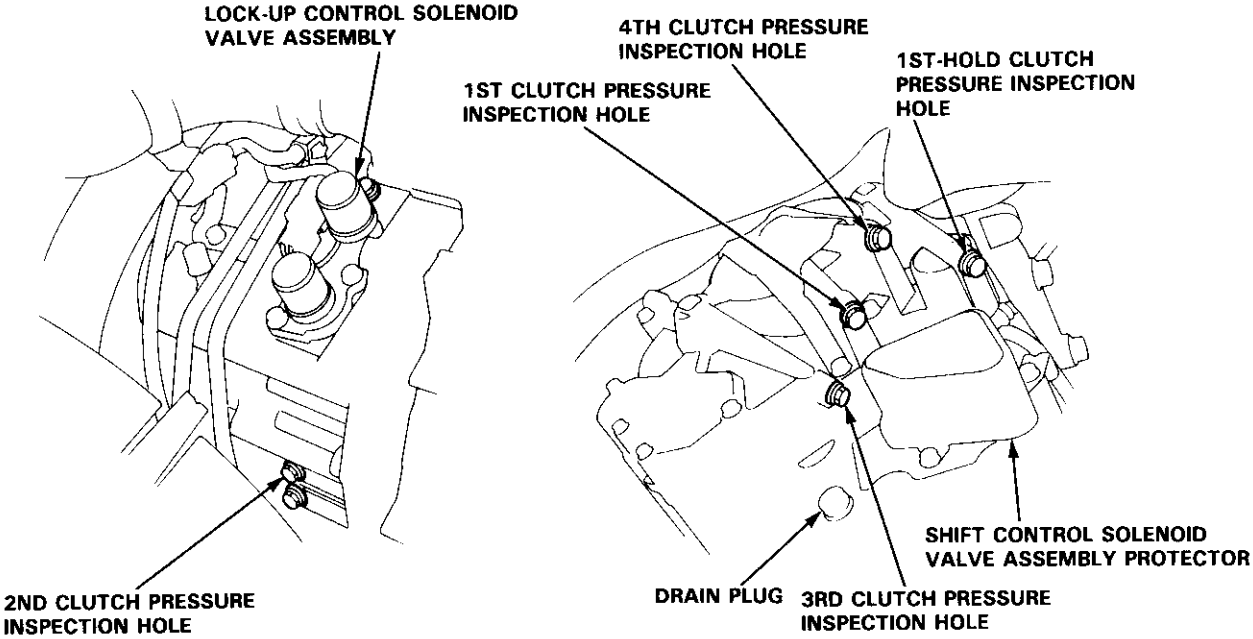

PRESSURE	SELECTOR POSITION	SYMPTOM	PROBABLE CAUSE	FLUID PRESSURE	
				Standard	Service Limit
1st Clutch	1 or D4	No or low 1st pressure	1st Clutch	830—880 kPa (8.5—9.0 kgf/cm², 120—130 psi)	780 kPa (8.0 kgf/cm², 110 psi)
1st-hold Clutch	1	No or low 1st-hold pressure	1st-hold Clutch		
2nd Clutch	2	No or low 2nd pressure	2nd Clutch		
2nd Clutch	D4	No or low 2nd pressure	2nd Clutch	460 kPa (4.7 kgf/cm², 67 psi) throttle control lever fully closed 830—880 kPa (8.5—9.0 kgf/cm², 120—130 psi) throttle control lever more than 3/16 opened	410 kPa (4.2 kgf/cm², 60 psi) throttle control lever fully closed 780 kPa (8.0 kgf/cm², 110 psi) throttle control lever more than 3/16 opened
3rd Clutch		No or low 3rd pressure	3rd Clutch		
4th Clutch		No or low 4th pressure	4th Clutch		
	R		Servo Valve or 4th Clutch	830—880 kPa (8.5—9.0 kgf/cm², 120—130 psi)	780 kPa (8.0 kgf/cm², 110 psi)

(cont'd)

- **Clutch Low/High Pressure Measurement**

⚠ WARNING While testing, be careful of the rotating front wheels.

—1. Allow the front wheels to rotate freely.

—2. Remove the cable end of the throttle control cable from the throttle control lever.

NOTE: Do not loosen the locknuts, simply unhook the cable end.

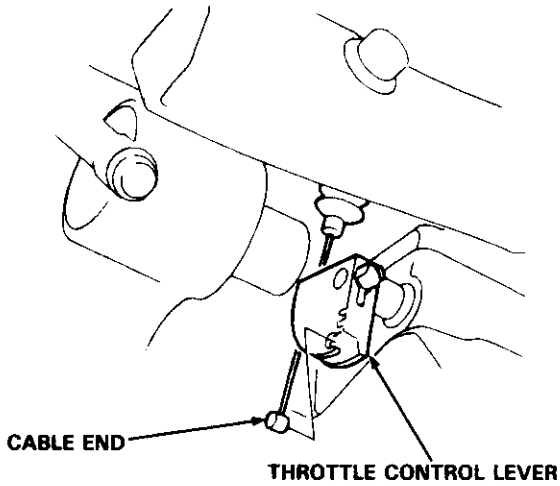

—3. Start the engine and let it idle.

—4. Shift the select lever to [D4] position.

—5. Slowly move the throttle linkage to increase engine rpm until pressure is indicated on the oil pressure gauge.
Then release the throttle linkage, allowing the engine to return to an idle, and measure the pressure reading.

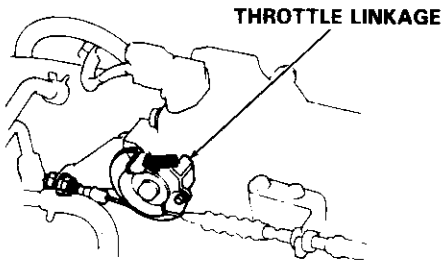

—6. With the engine idling, lift the throttle control lever up approximately 1/2 of its possible travel and increase the engine rpm until pressure is indicated on the gauge, then measure the highest pressure reading obtained.

—7. Repeat steps 5 and 6 for each clutch pressure being inspected.

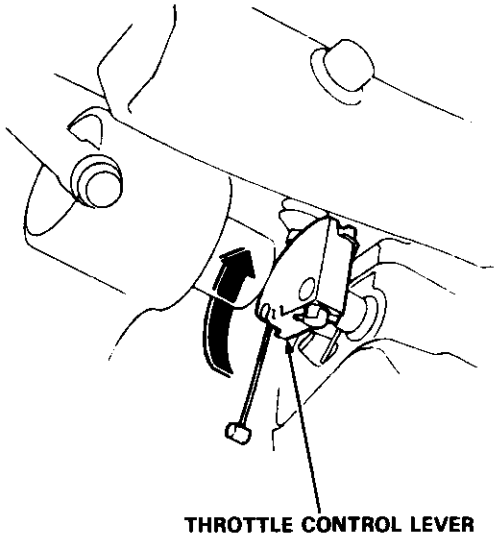

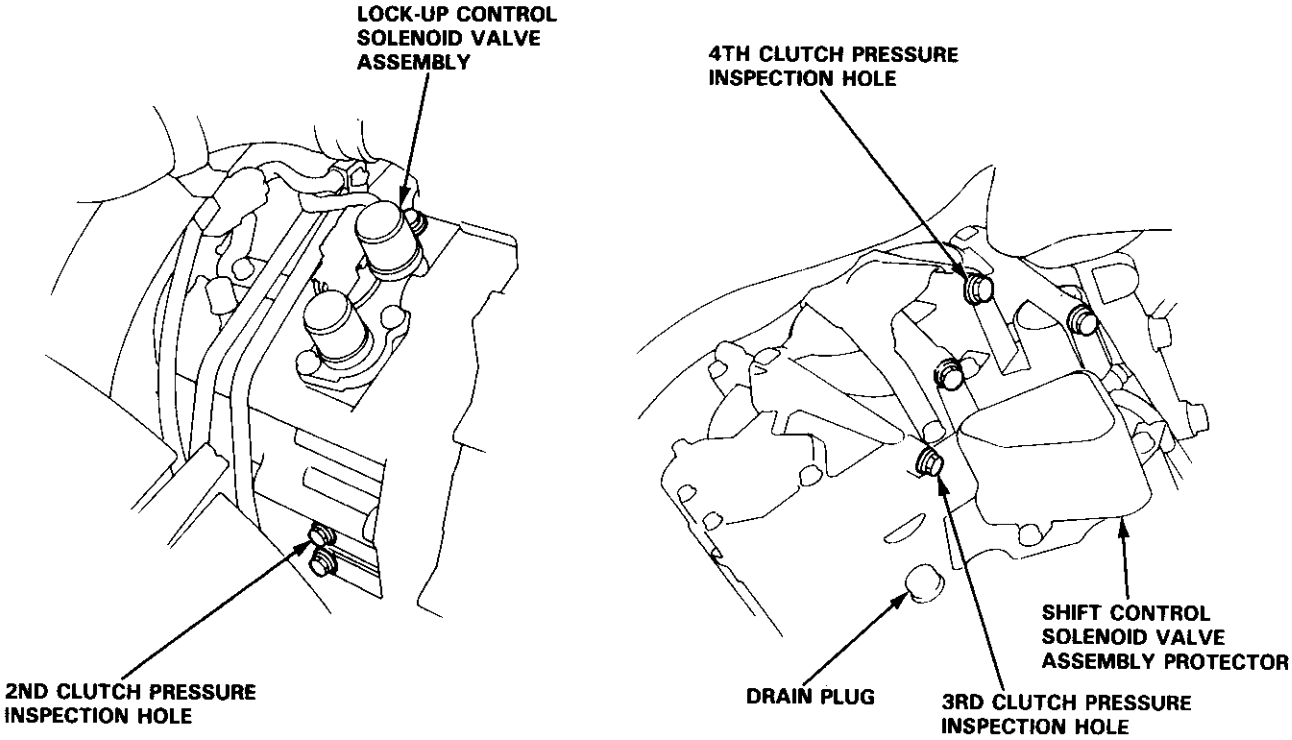

PRESSURE	SELECTOR POSITION	SYMPTOM	PROBABLE CAUSE	FLUID PRESSURE	
				Standard	Service Limit
2nd Clutch	D4	No or low 2nd pressure	2nd Clutch	460–880 kPa (4.7–9.0 kgf/cm², 67–130 psi) varies with throttle opening	410 kPa (4.2 kgf/cm², 60 psi) with throttle control lever released 780 kPa (8.0 kgf/cm², 110 psi) with throttle control lever more than 3/16 opened
3rd Clutch		No or low 3rd pressure	3rd Clutch		
4th Clutch		No or low 4th pressure	4th Clutch		

(cont'd)

- **Throttle B Pressure Measurement**

⚠ WARNING While testing, be careful of the rotating front wheels.

—1. Allow the front wheels to rotate freely.
—2. Remove the cable end of the throttle control cable from the throttle control lever.

NOTE: Do not loosen the locknuts, simply unhook the cable end.

—3. Shift the selector lever to [D4] or [D3] position.
—4. Run the engine at 1,000 rpm.
—5. Measure full-closed throttle B pressure.
—6. Move the throttle control lever to full-opened throttle position.
—7. Measure full-opened throttle B pressure.

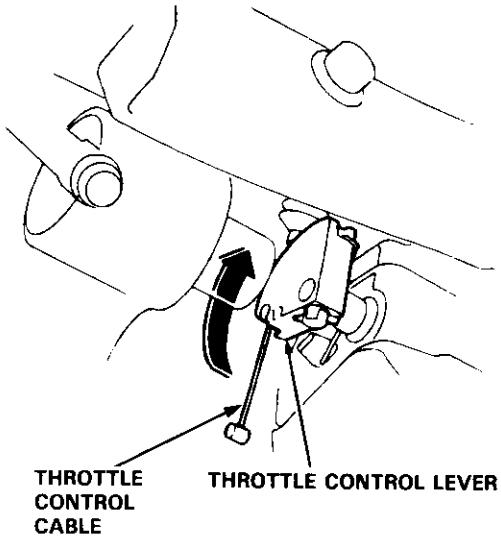

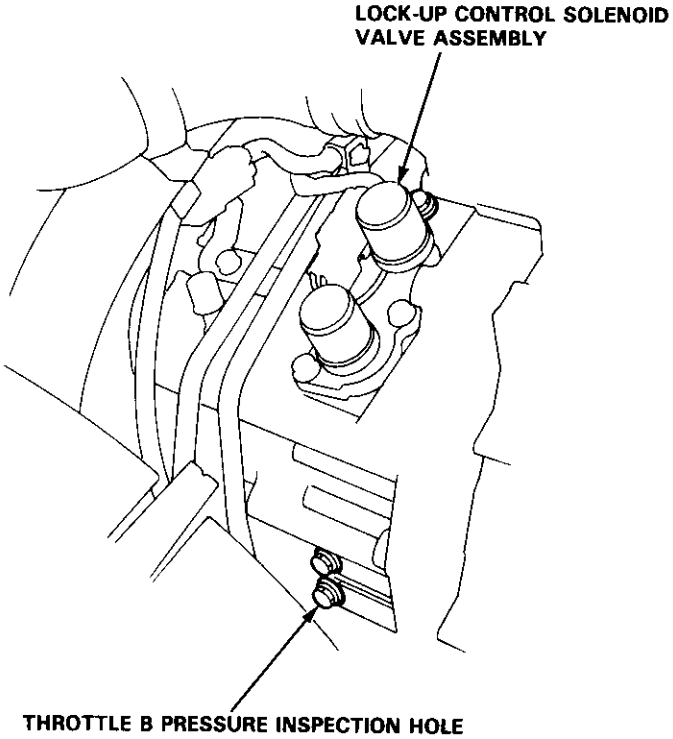

PRESSURE	SELECTOR POSITION	SYMPTOM	PROBABLE CAUSE	FLUID PRESSURE	
				Standard	Service Limit
Throttle B	[D4] or [D3]	Pressure too high	Throttle Valve B	0—15 kPa (0—0.15 kgf/cm², 0—2.1 psi) throttle control lever fully closed	—
		No or low Throttle B pressure		830—880 kPa (8.5—9.0 kgf/cm², 120—130 psi) throttle control lever fully closed	780 kPa (8.0 kgf/cm², 110 psi) throttle control lever fully closed

Removal

⚠ WARNING

- **Make sure lifts, jacks and safety stands are placed properly, and hoist brackets are attached to the correct position on the engine (see section1).**
- **Apply parking brake and block rear wheels, so car will not roll off stands and fall on you while working under it**

CAUTION: Use fender covers to avoid damaging painted surfaces.

1. Disconnect the battery negative (−) and positive (+) cables from the battery.

2. Remove the intake air duct and air cleaner housing assembly.

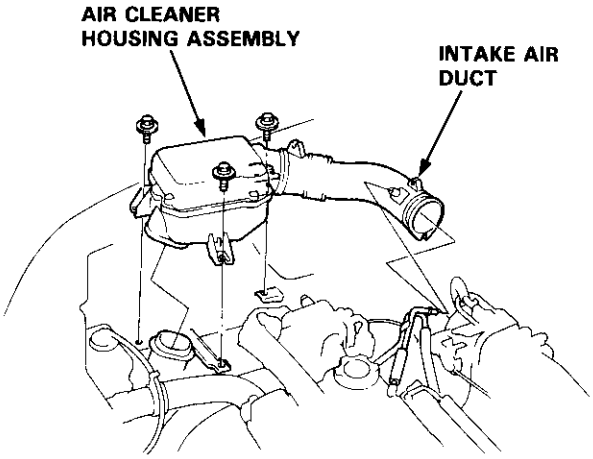

3. Remove the starter motor cables and cable holder from the starter motor.

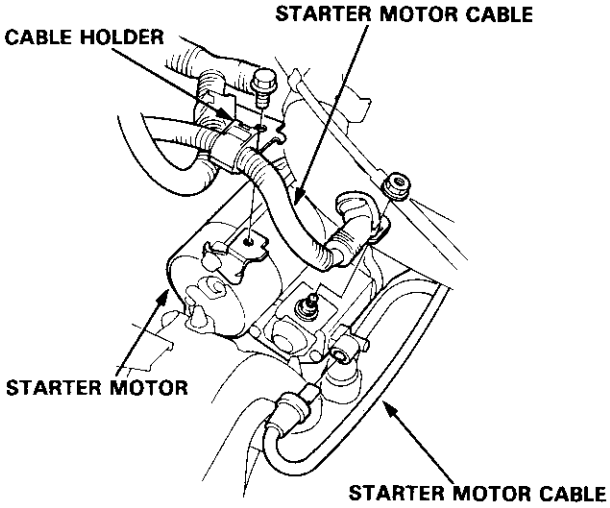

4. Remove the transmission ground cable from the transmission hanger.

5. Disconnect the lock-up control solenoid valve connector and the shift control solenoid valve connector, then remove the harness clamp on the lock-up control solenoid harness from the harness stay.

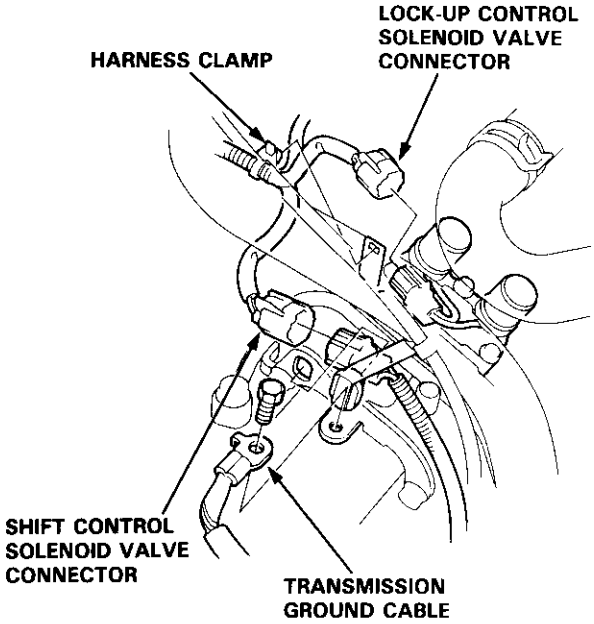

6. Disconnect the vehicle speed sensor (VSS), mainshaft speed sensor and countershaft speed sensor connectors.

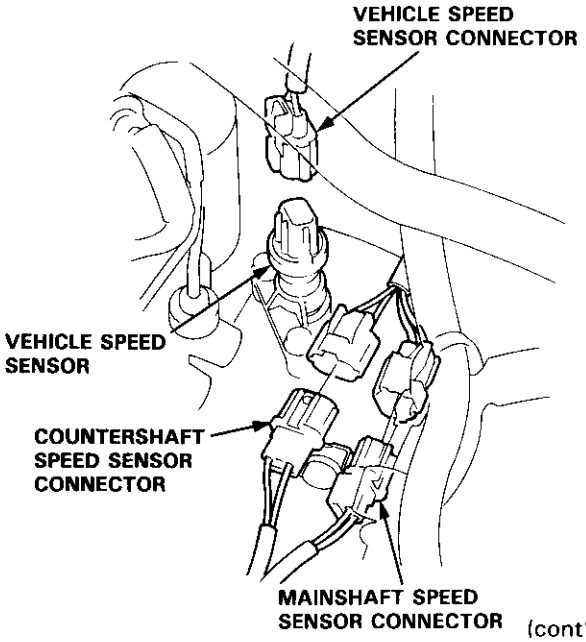

(cont'd)

Removal (cont'd)

7. Remove the transmission housing mounting bolts.

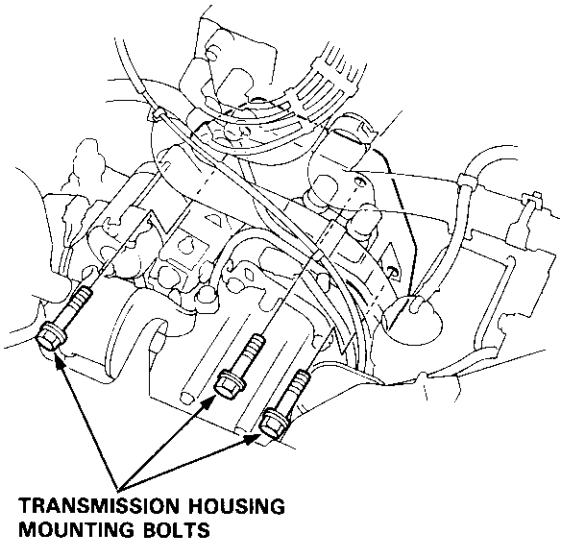

8. Remove the drain plug and drain the automatic transmission fluid (ATF). Reinstall the drain plug with a new sealing washer (see page 14-93).

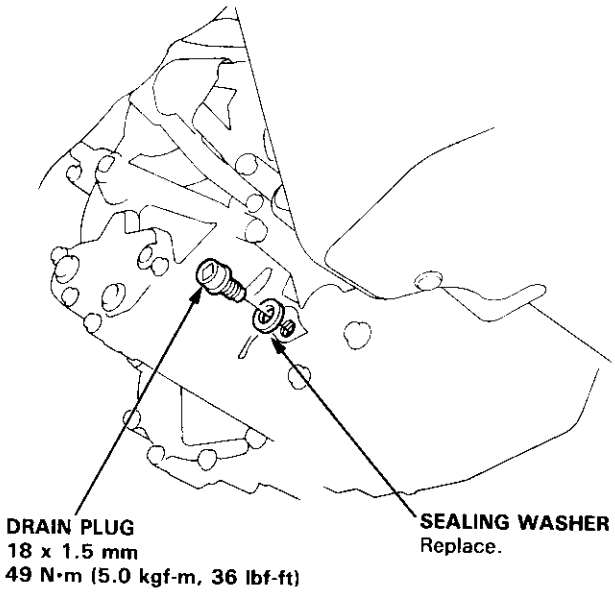

9. Remove the splash shield.

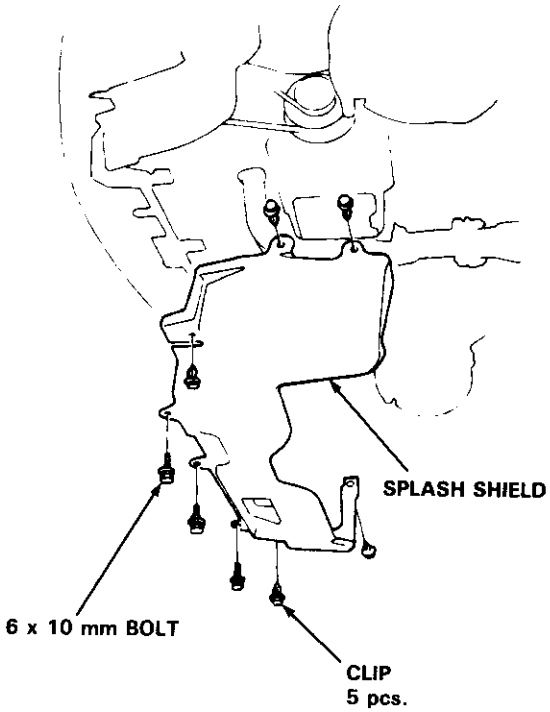

10. Remove the cotter pins and castle nuts, then separate the ball joints from the lower arm (see section 18).

11. Remove the right damper fork bolt, then separate right damper fork and damper.

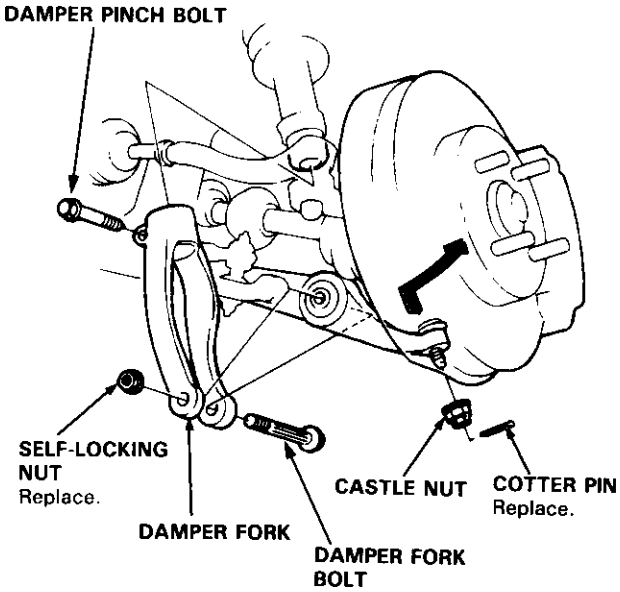

12. Pry the right driveshaft out of the differential and pry the left driveshaft out of the intermediate shaft.

13. Pull on the inboard joint and remove the right and left driveshafts (see section 16).

14. Tie plastic bags over the driveshaft ends.

    NOTE: Coat all precision finished surfaces with clean engine oil.

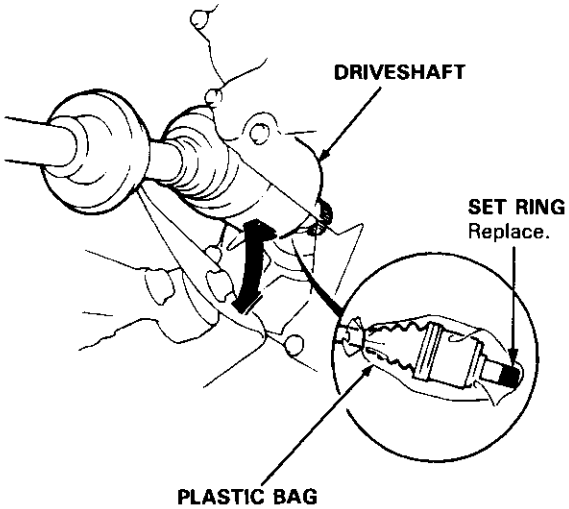

15. Disconnect the heated oxygen sensor (HO2S) connector.

16. Remove the exhaust pipe A.

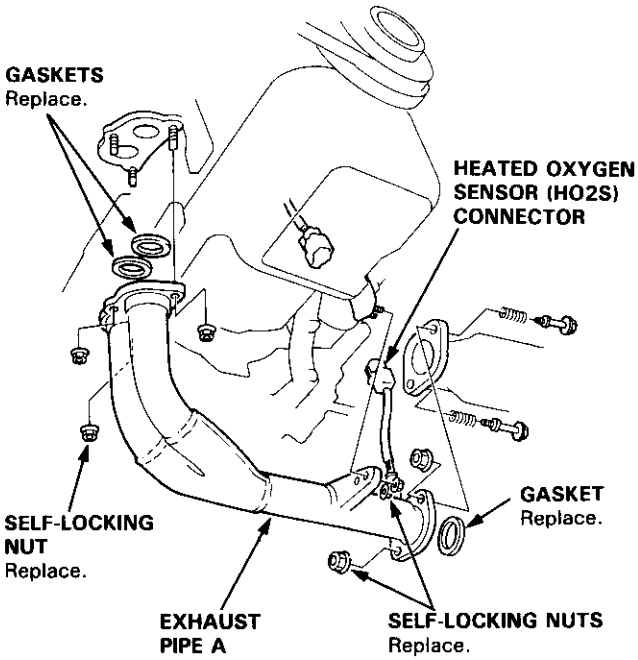

17. Remove the intermediate shaft.

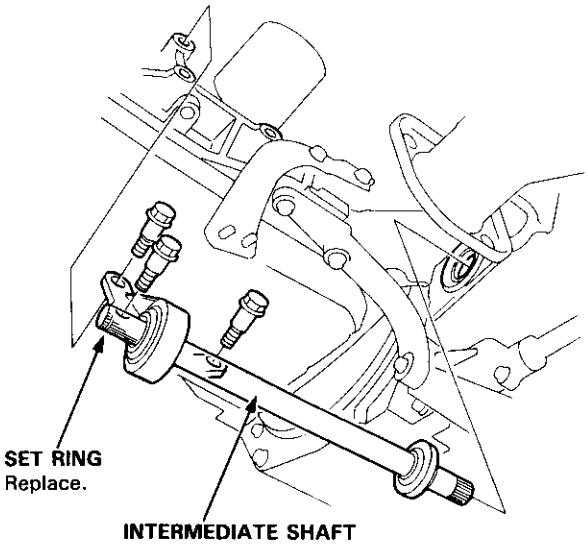

18. Remove the shift cable cover, then remove the shift cable by removing the control lever.

    CAUTION: Take care not to bend the shift control cable while removing it.

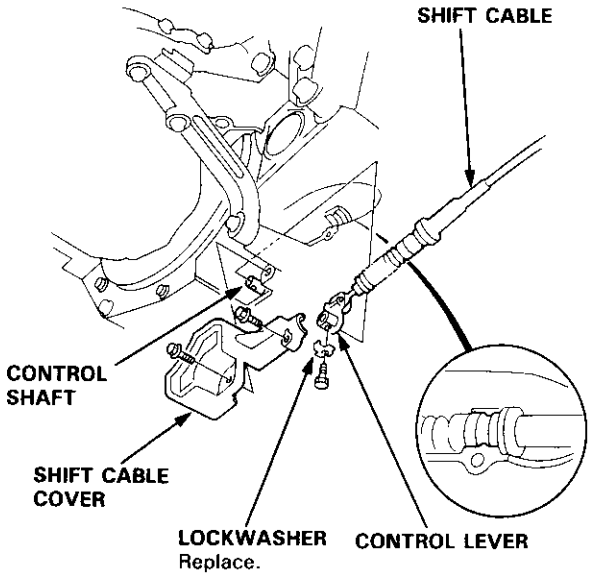

(cont'd)

Removal (cont'd)

19. Remove the right front mount/bracket, then remove the end of the throttle control cable from the throttle control lever.

20. Remove the ATF cooler hoses at the joint pipes. Turn the ends of the cooler hoses up to prevent ATF from flowing out, then plug the joint pipes.

    NOTE: Check for any sign of leakage at the hose joints.

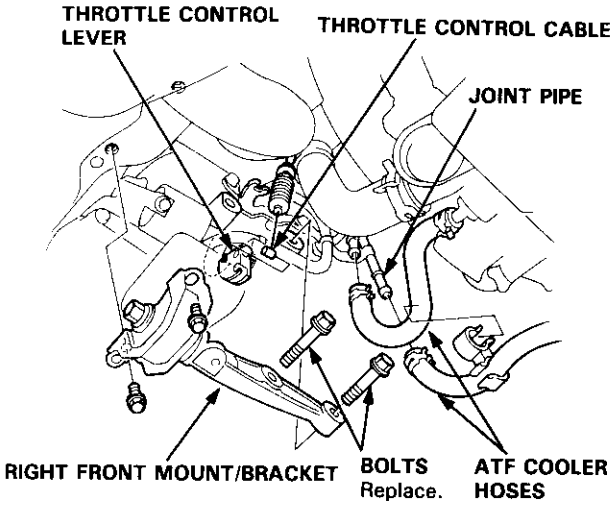

21. Remove the engine stiffener and torque converter cover.

22. Remove the eight drive plate bolts one at at time while rotating the crankshaft pulley.

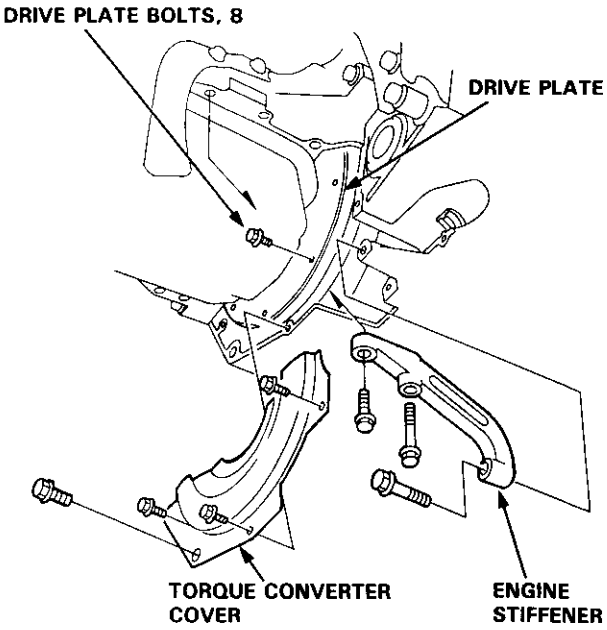

23. Place a jack under the transmission, raise the transmission just enough to take weight off of the mounts, then remove the transmission mount.

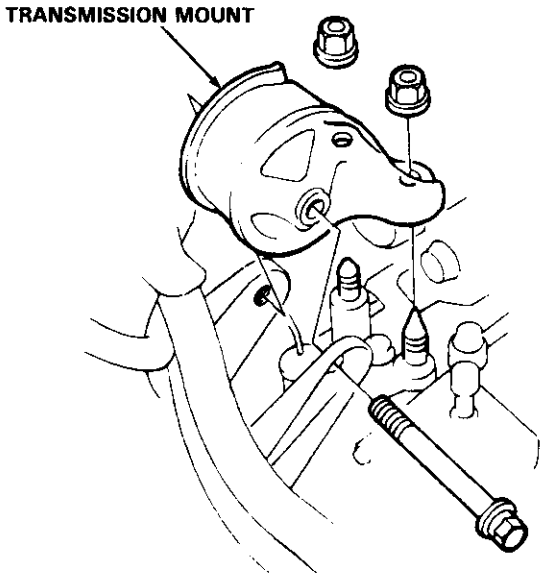

24. Remove the transmission housing mounting bolts and rear engine mounting bolts.

25. Pull the transmission away from the engine until it clears the 14 mm dowel pins, then lower it on the transmission jack.

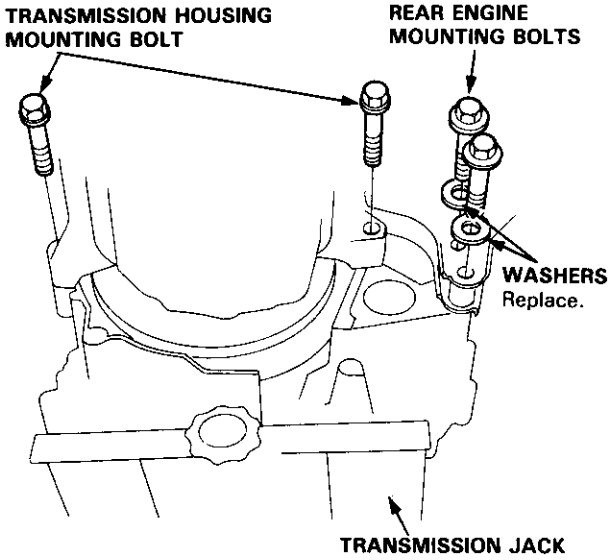

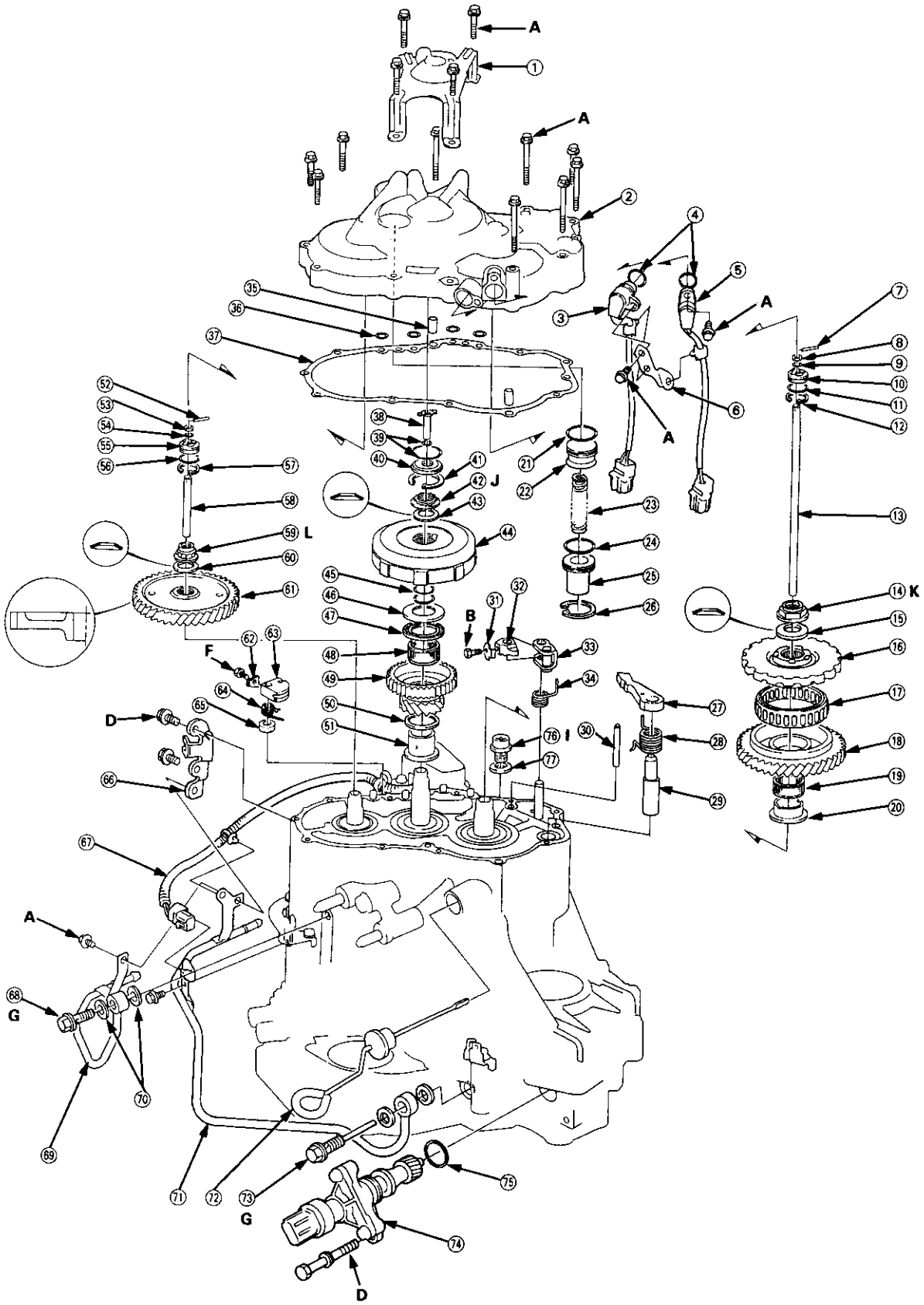
A
1
A
2
4
5
A
7
8
9
10
11
12
3
6
A
35
36
37
52
53
54
55
56
57
58
59 L
60
61
38
39
40
41
42 J
43
44
21
22
23
24
25
26
13
14 K
15
16
17
18
19
20
45
46
47
48
49
50
51
B
31
32
33
34
27
28
29
30
76 I
77
62
63
F
64
65
D
66
67
A
68
G
70
69
71
72
73
G
75
74
D

① **RIGHT SIDE COVER PROTECTOR**
② **RIGHT SIDE COVER**
③ **MAINSHAFT SPEED SENSOR**
④ **O-RING** Replace.
⑤ **COUNTERSHAFT SPEED SENSOR**
⑥ **HARNESS STAY**
⑦ **ROLLER**
⑧ **COLLAR**
⑨ **O-RING** Replace.
⑩ **FEED PIPE FLANGE**
⑪ **O-RING**
⑫ **SNAP RING**
⑬ **3RD CLUTCH FEED PIPE**
⑭ **COUNTERSHAFT LOCKNUT (FLANGE NUT)** Replace.
⑮ **COUNTERSHAFT CONICAL SPRING WASHER** Replace.
⑯ **PARKING GEAR**
⑰ **ONE-WAY CLUTCH**
⑱ **COUNTERSHAFT 1ST GEAR**
⑲ **NEEDLE BEARING**
⑳ **COUNTERSHAFT 1ST GEAR COLLAR**
㉑ **O-RING** Replace.
㉒ **1ST-HOLD ACCUMULATOR PISTON**
㉓ **1ST-HOLD ACCUMULATOR SPRING**
㉔ **O-RING** Replace.
㉕ **1ST-HOLD ACCUMULATOR COVER**
㉖ **SNAP RING**
㉗ **PARKING BRAKE PAWL**
㉘ **PARKING BRAKE PAWL SPRING**
㉙ **PARKING BRAKE PAWL SHAFT**
㉚ **PARKING BRAKE PAWL STOPPER**
㉛ **LOCK WASHER** Replace.
㉜ **PARKING BRAKE STOPPER**
㉝ **PARKING BRAKE LEVER**
㉞ **PARKING BRAKE LEVER SPRING**
㉟ **DOWEL PIN**
㊱ **O-RING** Replace.
㊲ **RIGHT SIDE COVER GASKET** Replace.
㊳ **1ST CLUTCH FEED PIPE**
㊴ **O-RING** Replace.
㊵ **FEED PIPE GUIDE**
㊶ **SNAP RING**
㊷ **MAINSHAFT LOCKNUT (FLANGE NUT)** Replace.
㊸ **MAINSHAFT CONICAL SPRING WASHER** Replace.
㊹ **1ST CLUTCH ASSEMBLY**
㊺ **O-RING** Replace.
㊻ **THRUST WASHER**
㊼ **THRUST NEEDLE BEARING**
㊽ **NEEDLE BEARING**
㊾ **MAINSHAFT 1ST GEAR**
㊿ **THRUST WASHER**
(51) **MAINSHAFT 1ST GEAR COLLAR**
(52) **ROLLER**
(53) **COLLAR**
(54) **O-RING** Replace.
(55) **FEED PIPE FLANGE**
(56) **O-RING** Replace.
(57) **SNAP RING**
(58) **1ST-HOLD CLUTCH FEED PIPE**
(59) **SUB-SHAFT LOCKNUT (FLANGE NUT)** Replace.
(60) **SUB-SHAFT CONICAL SPRING WASHER** Replace.
(61) **SUB-SHAFT 1ST GEAR**
(62) **LOCK WASHER** Replace.
(63) **THROTTLE CONTROL LEVER**
(64) **THROTTLE CONTROL LEVER SPRING**
(65) **OIL SEAL** Replace.
(66) **THROTTLE CONTROL CABLE STAY**
(67) **SHIFT CONTROL SOLENOID HARNESS**
(68) **JOINT BOLT**
(69) **ATF COOLER PIPE**
(70) **SEALING WASHERS** Replace.
(71) **ATF COOLER PIPE**
(72) **ATF LEVEL GAUGE**
(73) **JOINT BOLT**
(74) **VEHICLE SPEED SENSOR**
(75) **O-RING** Replace.
(76) **DRAIN PLUG**
(77) **SEALING WASHER** Replace.

TORQUE SPECIFICATIONS

Ref No.	Torque Value	Bolt Size	Remarks
A	12 N·m (1.2 kgf·m, 8.7 lbf·ft)	6 x 1.0 mm	
B	14 N·m (1.4 kgf·m, 10 lbf·ft)	6 x 1.0 mm	Special bolt
D	22 N·m (2.2 kgf·m, 16 lbf·ft)	8 x 1.25 mm	
F	8 N·m (0.8 kgf·m, 6 lbf·ft)	5 x 0.8 mm	
G	28 N·m (2.9 kgf·m, 21 lbf·ft)	12 x 1.25 mm	ATF cooler pipe joint bolt
I	49 N·m (5.0 kgf·m, 36 lbf·ft)	18 x 1.5 mm	Drain plug
J	93 N·m (9.5 kgf·m, 69 lbf·ft)	19 x 1.25 mm	Mainshaft locknut (flange nut): Left-hand threads
K	103 N·m (10.5 kgf·m, 75.9 lbf·ft)→0→ 103 N·m (10.5 kgf·m, 75.9 lbf·ft)	23 x 1.25 mm	Countershaft locknut (flange nut) Left-hand threads
L	93 N·m (9.5 kg-m, 69 lb-ft)	19 x 1.25 mm	Sub-shaft locknut (flange nut)

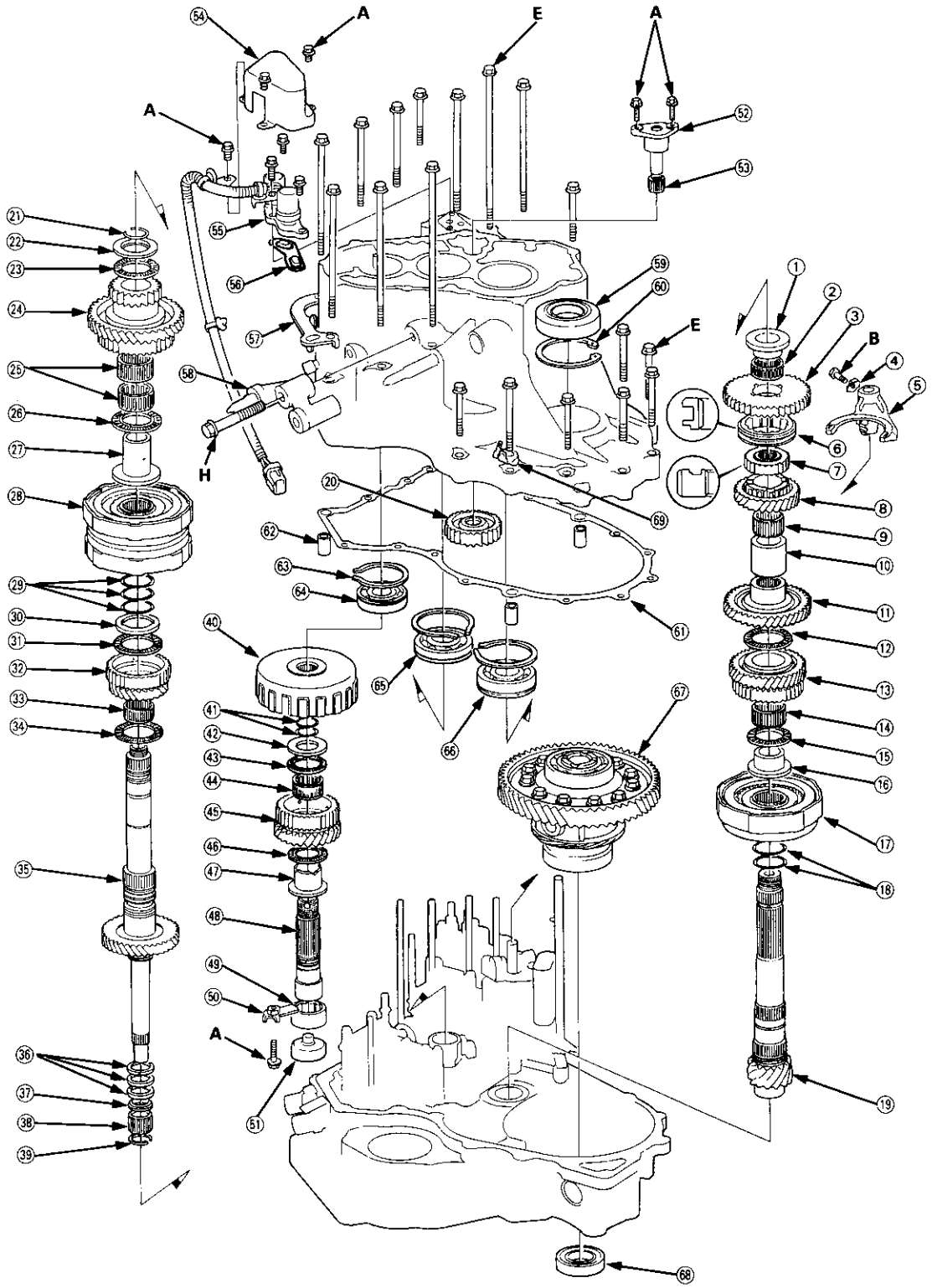
54
A
E
A
A
52
53
21
22
23
24
55
56
59
60
1
2
3
B
4
5
E
57
25
58
26
27
H
6
7
28
20
69
8
9
62
10
63
64
29
11
30
61
31
40
12
32
65
13
33
67
41
14
34
42
15
43
66
16
44
45
17
46
47
35
18
48
49
50
A
36
19
37
51
38
39
68

① COUNTERSHAFT REVERSE GEAR COLLAR
② NEEDLE BEARING
③ COUNTERSHAFT REVERSE GEAR
④ LOCK WASHER Replace.
⑤ REVERSE SHIFT FORK
⑥ REVERSE SELECTOR
⑦ REVERSE SELECTOR HUB
⑧ COUNTERSHAFT 4TH GEAR
⑨ NEEDLE BEARING
⑩ DISTANCE COLLAR, 28 mm Selective part.
⑪ COUNTERSHAFT 2ND GEAR
⑫ THRUST NEEDLE BEARING
⑬ COUNTERSHAFT 3RD GEAR
⑭ NEEDLE BEARING
⑮ THRUST NEEDLE BEARING
⑯ COUNTERSHAFT 3RD GEAR COLLAR
⑰ 3RD CLUTCH ASSEMBLY
⑱ O-RINGS Replace.
⑲ COUNTERSHAFT
⑳ REVERSE IDLER GEAR
㉑ SNAP RING
㉒ THRUST WASHER
㉓ THRUST NEEDLE BEARING
㉔ MAINSHAFT 4TH GEAR
㉕ NEEDLE BEARINGS
㉖ THRUST NEEDLE BEARING
㉗ MAINSHAFT 4TH GEAR COLLAR
㉘ 2ND/4TH CLUTCH ASSEMBLY
㉙ O-RINGS Replace.
㉚ THRUST WASHER, 36.5 x 55 mm Selective part.
㉛ THRUST NEEDLE BEARING
㉜ MAINSHAFT 2ND GEAR
㉝ NEEDLE BEARING
㉞ THRUST NEEDLE BEARING
㉟ MAINSHAFT
㊱ SEALING RINGS, 35 mm
㊲ SEALING RING, 29 mm
㊳ NEEDLE BEARING
㊴ SET RING
㊵ 1ST-HOLD CLUTCH
㊶ O-RING Replace.
㊷ THRUST WASHER
㊸ THRUST NEEDLE BEARING
㊹ NEEDLE BEARING
㊺ SUB-SHAFT 4TH GEAR
㊻ THRUST NEEDLE BEARING
㊼ SUB-SHAFT 4TH GEAR COLLAR
㊽ SUB-SHAFT
㊾ SUB-SHAFT NEEDLE BEARING
㊿ NEEDLE BEARING STOPPER
(51) OIL GUIDE CAP Replace.
(52) REVERSE IDLER GEAR SHAFT/HOLDER
(53) NEEDLE BEARING
(54) SHIFT CONTROL SOLENOID VALVE ASSEMBLY PROTECTOR
(55) SHIFT CONTROL SOLENOID VALVE A/B
(56) SHIFT CONTROL SOLENOID VALVE A/B FILTER/GASKET Replace.
(57) TRANSMISSION HANGER
(58) TRANSMISSION MOUNT BRACKET
(59) OIL SEAL Replace.
(60) SET RING Replace.
(61) TRANSMISSION HOUSING GASKET Replace.
(62) DOWEL PIN
(63) SNAP RING
(64) SUB-SHAFT TRANSMISSION HOUSING BEARING
(65) MAINSHAFT TRANSMISSION HOUSING BEARING
(66) COUNTERSHAFT TRANSMISSION HOUSING BEARING
(67) DIFFERENTIAL ASSEMBLY
(68) OIL SEAL Replace.
(69) CONNECTOR STAY

TORQUE SPECIFICATIONS

Ref No.	Torque Value	Bolt Size	Remarks
A	12 N·m (1.2 kgf·m, 8.7 lbf·ft)	6 x 1.0 mm	Special bolt
B	14 N·m (1.4 kgf·m, 10 lbf·ft)	6 x 1.0 mm	
E	44 N·m (4.5 kgf·m, 33 lbf·ft)	10 x 1.25 mm	
H	64 N·m (6.5 kgf·m, 47 lbf·ft)	12 x 1.25 mm	

Torque Converter Housing/Valve Body

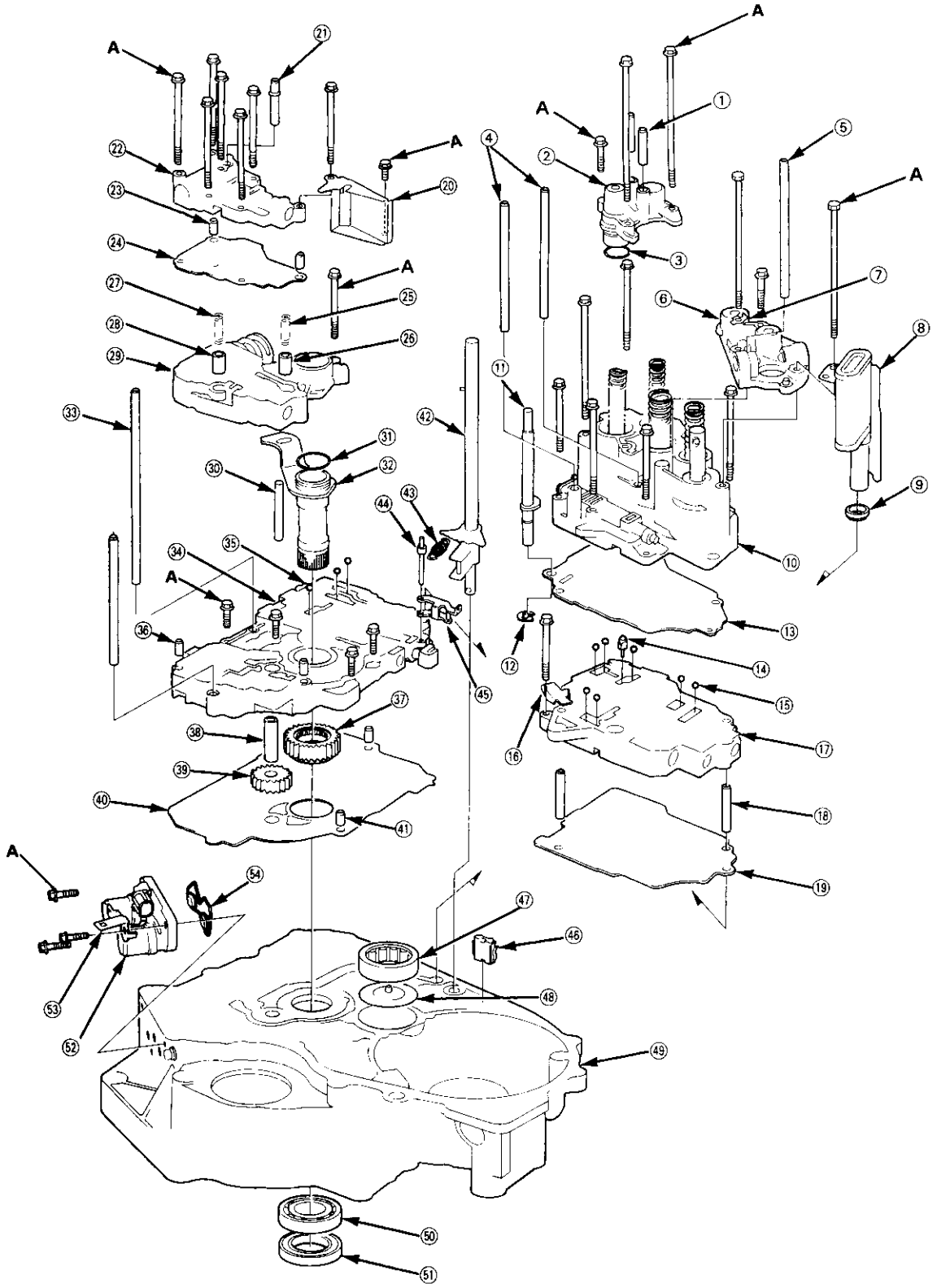

1 OIL FEED PIPE
2 ACCUMULATOR COVER
3 O-RING Replace.
4 OIL FEED PIPE
5 OIL FEED PIPE
6 SERVO DETENT BASE
7 LOCK WASHER Replace.
8 ATF STRAINER
9 SUCTION PIPE COLLAR
10 SERVO BODY
11 THROTTLE CONTROL SHAFT
12 E RING
13 SERVO SEPARATOR PLATE
14 1ST ACCUMULATOR CHOKE
15 CHECK BALL
16 STOPPER SHAFT STAY
17 SECONDARY VALVE BODY
18 DOWEL PIN
19 SECONDARY SEPARATOR PLATE
20 LUBRICATOR PLATE
21 OIL FEED PIPE
22 LOCK-UP VALVE BODY
23 DOWEL PIN
24 LOCK-UP SEPARATOR PLATE
25 TORQUE CONVERTER CHECK VALVE SPRING
26 TORQUE CONVERTER CHECK VALVE
27 COOLER CHECK VALVE SPRING
28 COOLER CHECK VALVE
(29) REGULATOR VALVE BODY
(30) STOPPER SHAFT
(31) O-RING Replace.
(32) STATOR SHAFT
(33) OIL FEED PIPE
(34) MAIN VALVE BODY
(35) CHECK BALL
(36) DOWEL PIN
(37) OIL PUMP DRIVE GEAR
(38) OIL PUMP DRIVEN GEAR SHAFT
(39) OIL PUMP DRIVEN GEAR
(40) MAIN SEPARATOR PLATE
(41) DOWEL PIN
(42) CONTROL SHAFT
(43) DETENT SPRING
(44) DETENT ARM SHAFT
(45) DETENT ARM
(46) ATF MAGNET
(47) COUNTERSHAFT TORQUE CONVERTER HOUSING NEEDLE BEARING
(48) OIL GUIDE PLATE
(49) TORQUE CONVERTER HOUSING
(50) MAINSHAFT TORQUE CONVERTER HOUSING BEARING
(51) OIL SEAL Replace.
(52) LOCK-UP CONTROL SOLENOID VALVE A/B
(53) CONNECTOR STAY
(54) LOCK-UP CONTROL SOLENOID VALVE A/B FILTER/GASKET Replace.

TORQUE SPECIFICATIONS

Ref No.	Torque Value	Bolt Size	Remarks
A	12 N•m (1.2 kgf•m, 8.7 lbf•ft)	6 x 1.0 mm	

Right Side Cover

Removal

NOTE:
- Clean all parts thoroughly in solvent or carburetor cleaner, and dry with compressed air.
- Blow out all passages.
- When removing the transmission right side cover, replace the following:
  - Right side cover gasket
  - Lock washers
  - O-rings
  - Each shaft locknut
  - Conical spring washers
  - Sealing washers

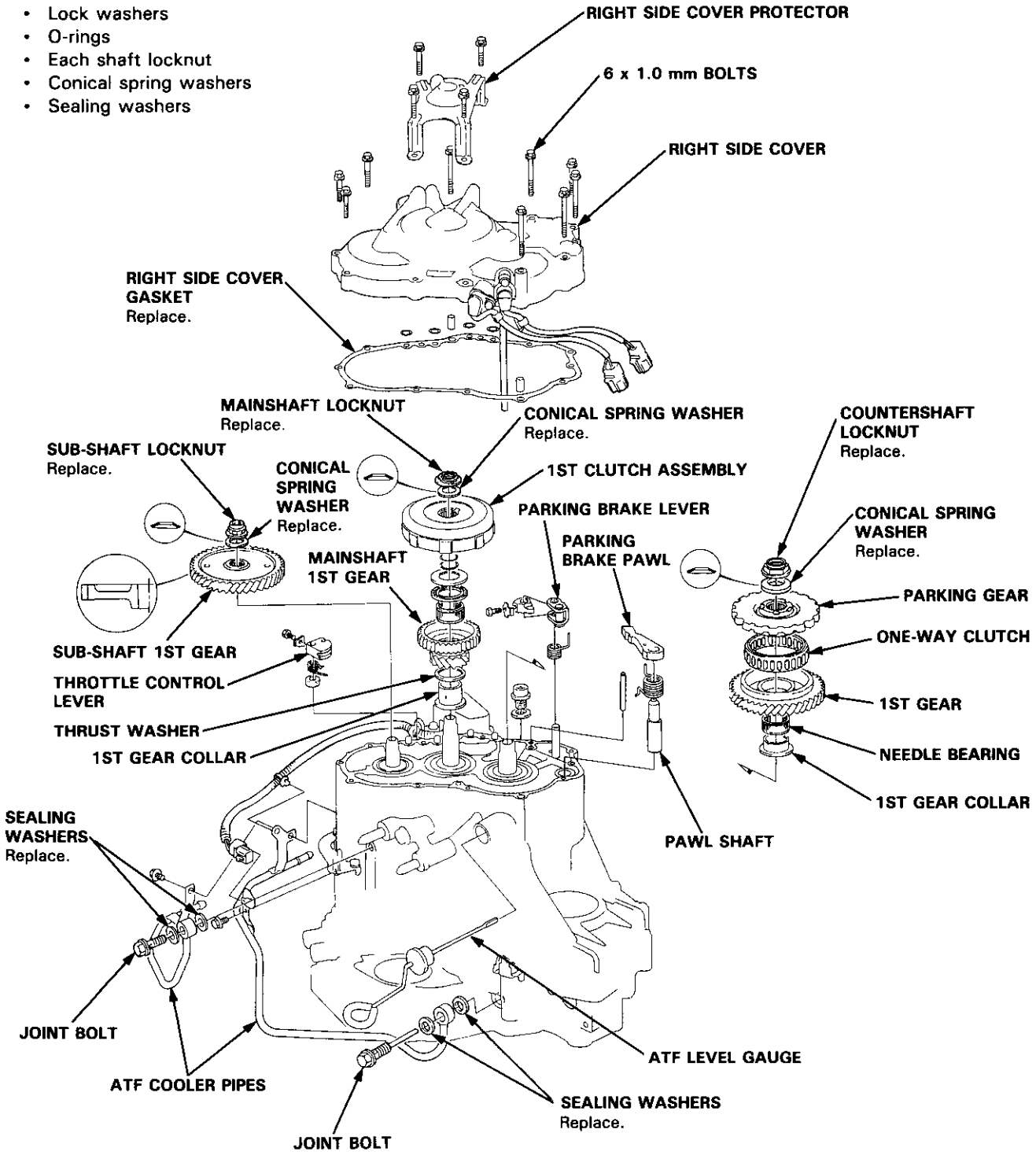

1. Remove the 13 bolts securing the right side cover and right side cover protector, then remove them.

2. Slip the special tool onto the mainshaft as shown.

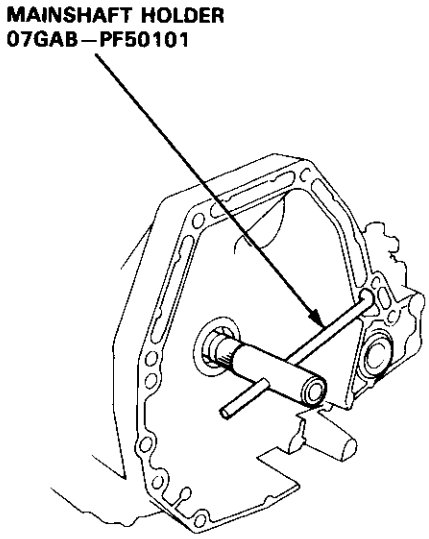

3. Engage the parking brake pawl with the parking gear.

4. Align the hole of the sub-shaft 1st gear with the hole of the the transmission housing, then insert a pin to lock the sub-shaft while removing the sub-shaft locknut.

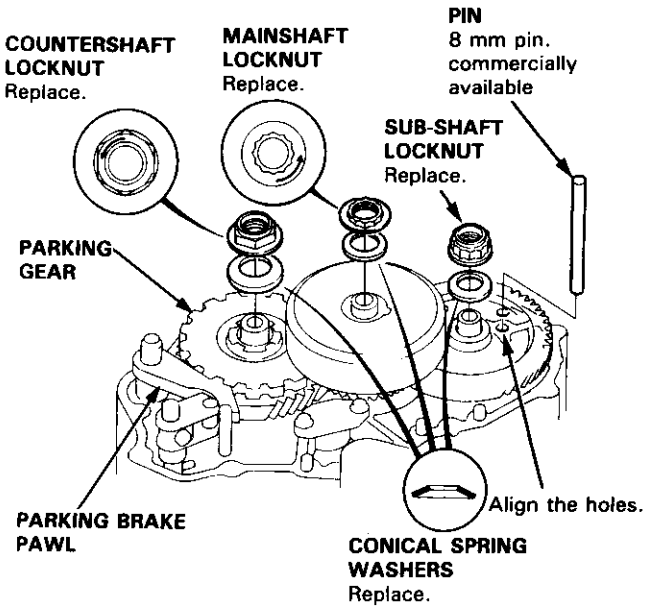

5. Pry the lock tab of the mainshaft locknut.

6. Cut the lock tabs of the countershaft and sub-shaft locknuts using a chisel as shown. Then remove the locknut from each shaft.

   NOTE:
   - Mainshaft and countershaft locknuts have left-hand threads.
   - Clean the old countershaft locknut, it is used to install the parking gear on the countershaft.
   - Always wear safety glasses.

   CAUTION:
   Keep all of the chiseled particles out of the transmission.

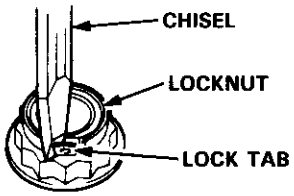

7. Remove the lock pin that was installed to hold the sub-shaft.

8. Remove the special tool from the mainshaft after removing the locknut.

9. Remove the 1st clutch and mainshaft 1st gear assembly from the mainshaft.

10. Remove the sub-shaft 1st gear.

11. Remove the parking brake pawl.

12. Using a universal two jaw puller, remove the parking gear, one-way clutch and countershaft 1st gear assembly.

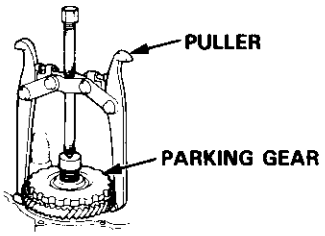

13. Remove the parking brake lever from the control shaft.

14. Remove the throttle control lever from the throttle control shaft.

15. Remove the ATF cooler pipes.

16. Remove the ATF level gauge.

Transmission Housing

Removal

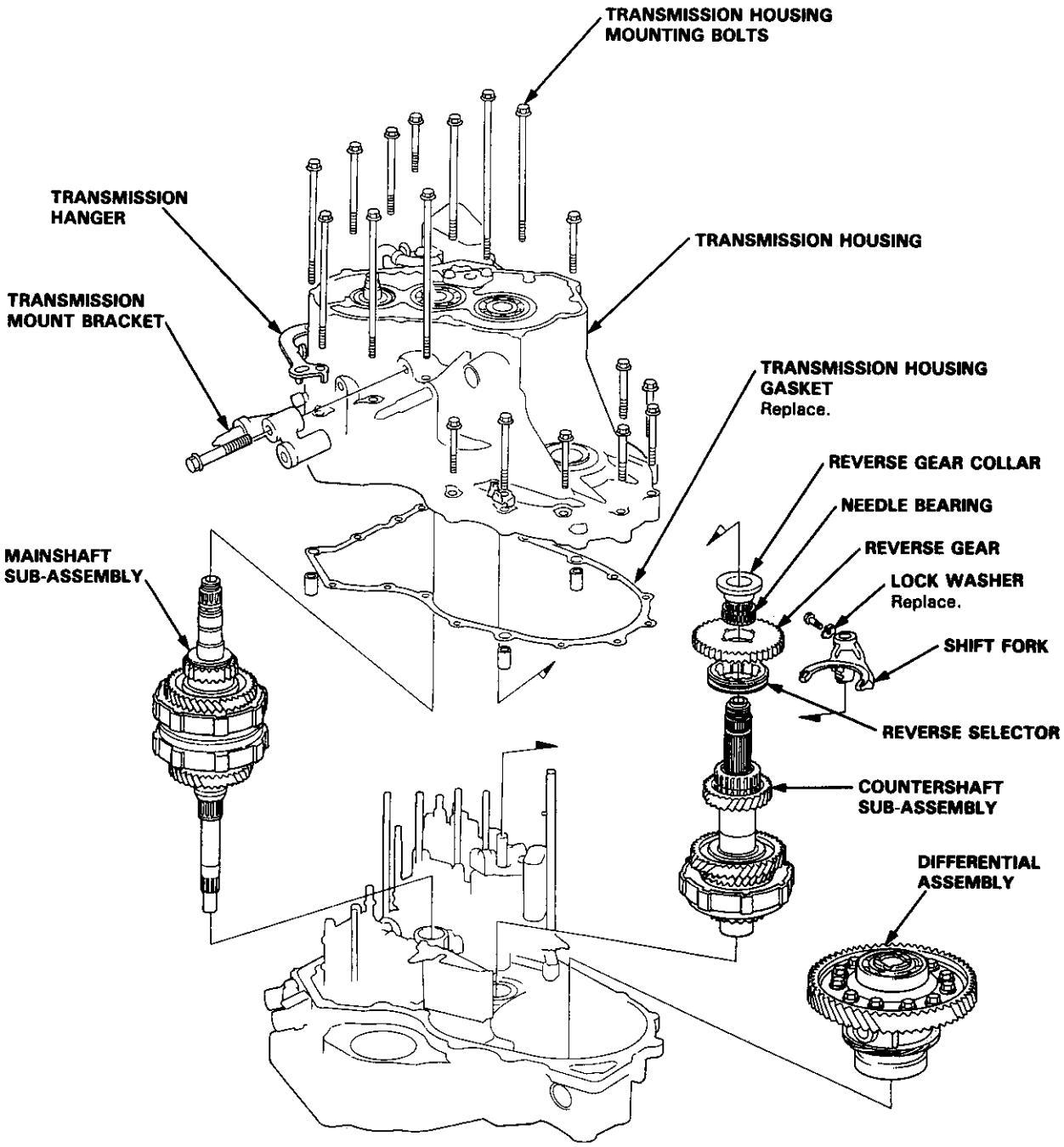

NOTE:
- Clean all parts thoroughly in solvent or carburetor cleaner and dry with compressed air.
- Blow out all passages.
- When removing the transmission housing, replace the following:
  - Transmission housing gasket
  - Lock washer

1. Remove the transmission mount bracket.

2. Remove the transmission housing mounting bolts and hanger.

3. Align the spring pin of the control shaft with the transmission housing groove by turning the control shaft.

4. Install the special tool on the transmission housing, then remove the housing as shown.

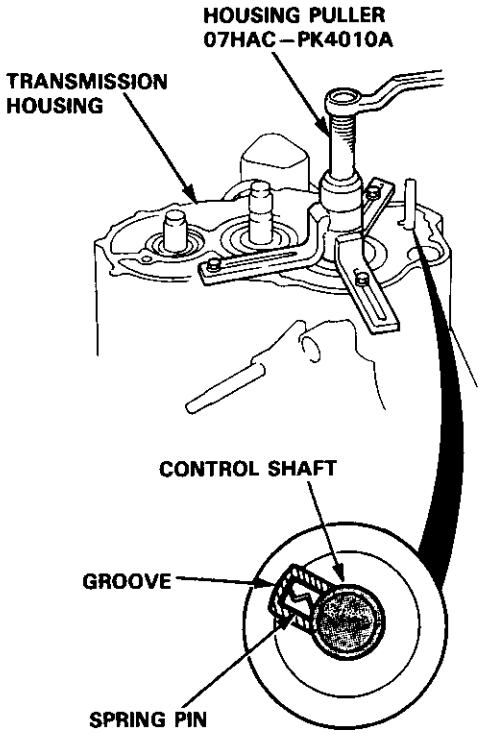

5. Remove the countershaft reverse gear with the collar and needle bearing.

6. Remove the lock bolt securing the shift fork, then remove the fork with the reverse selector from the countershaft.

7. Remove the countershaft and mainshaft sub-assembly together.

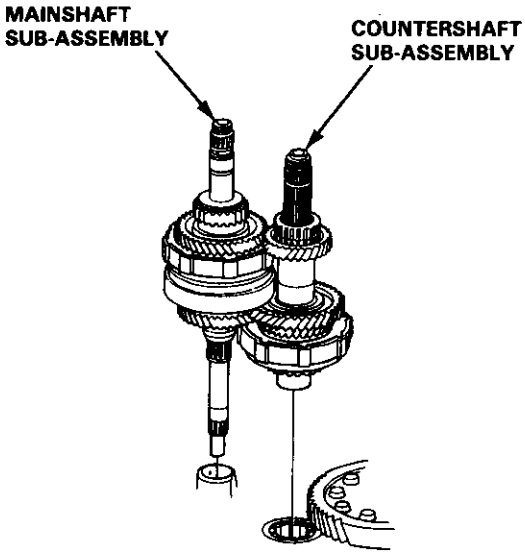

8. Remove the differential assembly.

Torque Converter Housing/Valve Body

Removal

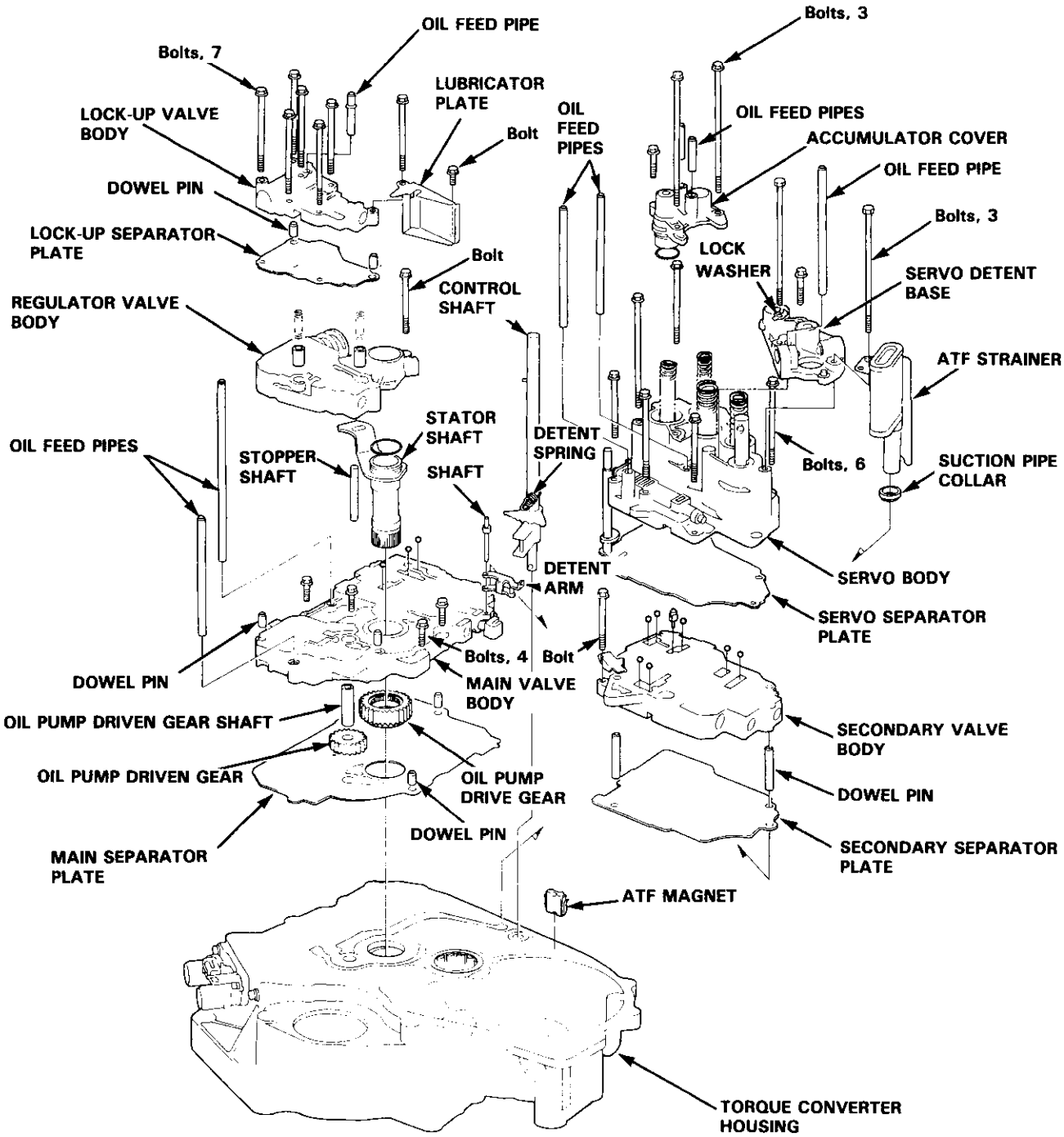

NOTE:
- Clean all parts thoroughly in solvent or carbuetor cleaner and dry with compressed air.
- Blow out all passages.
- When removing the valve body replace the following:
  - O-rings
  - Lock washers

1. Remove the oil feed pipes from the servo body, servo detent base, accumulator cover, lock-up valve body and main valve body.

2. Remove the three bolts securing the ATF strainer and servo detent base, then remove them.

3. Remove the three bolts securing the accumulator cover, then remove the accumulator cover.

4. Remove the six bolts securing the servo body, then remove the servo body and separator plate.

5. Remove the bolt securing the secondary valve body, then remove the secondary valve body and separator plate.

6. Remove the eight bolts securing the lubricator plate and lock-up valve body, then remove the lubricator plate, lock-up valve body and separator plate.

7. Remove the bolt securing the regulator valve body, then remove the regulator valve body.

8. Remove the stator shaft and stopper shaft.

9. Remove the detent spring from the detent arm, then remove the control shaft from the torque converter housing.

10. Remove the detent arm and detent arm shaft from the main valve body.

11. Remove the four bolts securing the main valve body, then remove the main valve body.

12. Remove the oil pump driven gear shaft, then remove the oil pump gears.

13. Remove the main separator plate with two dowel pins.

14. Remove and clean the ATF magnet.

15. Clean the inlet opening of the ATF strainer thoroughly with compressed air, then check that it is in good condition, and the inlet opening is not clogged.

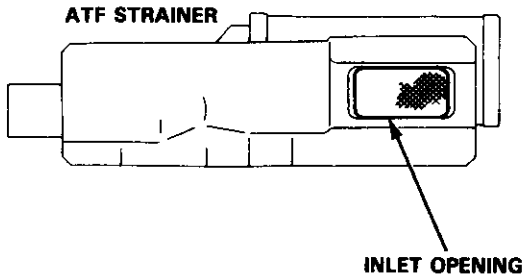

16. Replace the ATF strainer if it is clogged or damaged.

    NOTE: The ATF strainer can be reused if it is not clogged.

Valve Caps

Description

- Caps with one projected tip and one flat end are installed with the flat end toward the inside of the valve body.
- Caps with a projected tip on each end are installed with the smaller tip toward the inside of the valve body. The small tip is a spring guide.

Toward outside of valve body.

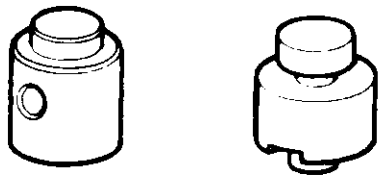

Toward inside of valve body.

- Caps with one projected tip and hollow end are installed with the tip toward the inside of the valve body. The tip is a spring guide.

Toward outside of valve body.

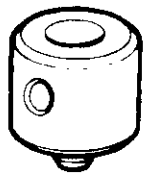

Toward inside of valve body.

- Caps with hollow ends are installed with the hollow end away from the inside of the valve body.
- Caps with notched ends are installed with the notch toward the inside of the valve body.
- Caps with flat ends and a hole through the center are installed with the smaller hole toward the inside of the valve body.

Toward outside of valve body.

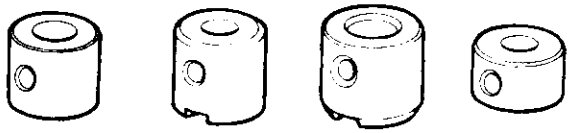

Toward inside of valve body.

- Caps with flat ends and a groove around the cap are installed with the grooved side toward the outside of the valve body.

Toward outside of valve body.

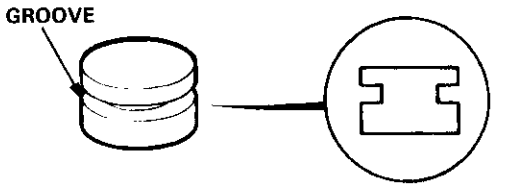

Sectional view.

Toward inside of valve body.

Repair

NOTE: This repair is only necessary if one or more of the valves in a valve body do not slide smoothly in their bores. You may use this procedure to free the valves in the valve bodies.

1. Soak a sheet of #600 abrasive paper in ATF for about 30 minutes.

2. Carefully tap the valve body so the sticking valve drops out of its bore.

   CAUTION: It may be necessary to use a small screwdriver to pry the the valve free. Be careful not to scratch the bore with the screwdriver.

3. Inspect the valve for any scuff marks. Use the ATF-soaked #600 pagper to polish off any burrs that are on the valve, than wash the valve in solvent and dry it with compressed air.

4. Roll up half a sheet of ATF-soaked paper and insert it in the valve bore of the sticking valve.
   Twist the paper slightly, so that it unrolls and fits the bore tightly, then polish the bore by twisting the paper as you push it in and out.

   CAUTION: The valve body is aluminum and doesn't require much polishing to remove any burrs.

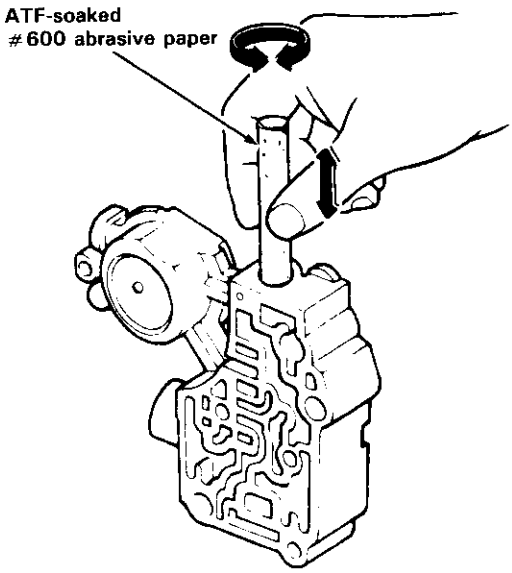

5. Remove the #600 paper and thoroughly wash the entire valve body in solvent, then dry with comperssed air.

6. Coat the valve with ATF then drop it into its bore. It should drop to the bottom of the bore under its own weight. If not, repeat step 4 then retest.

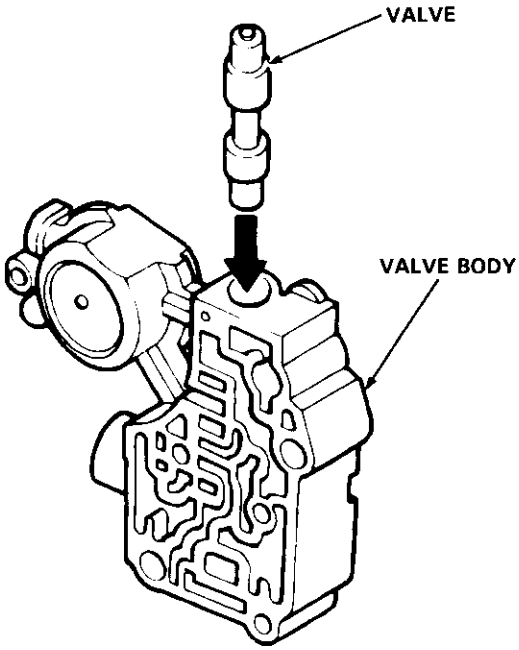

7. Remove the valve and thoroughly clean it and the valve body with solvent. Dry all parts with compressed air, then reassemble using ATF as a lubricant.

Valve

Assembly

NOTE:
Coat all parts with ATF before assembly.

- Install the valve, valve spring and cap in the valve body and secure with the roller.

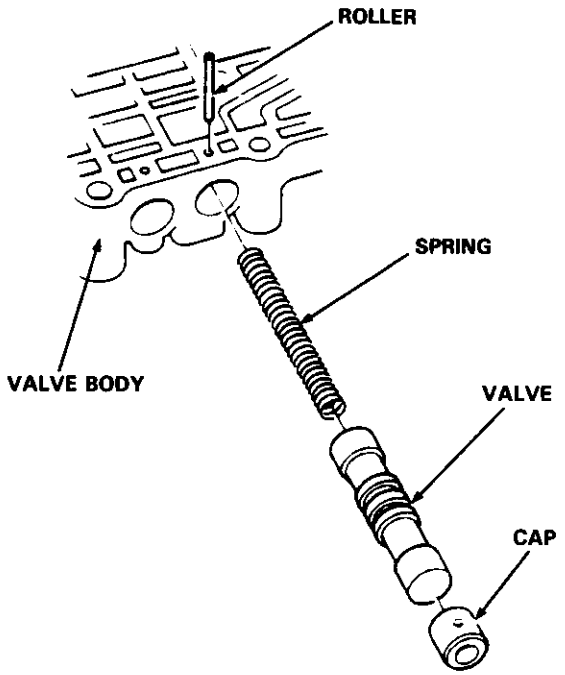

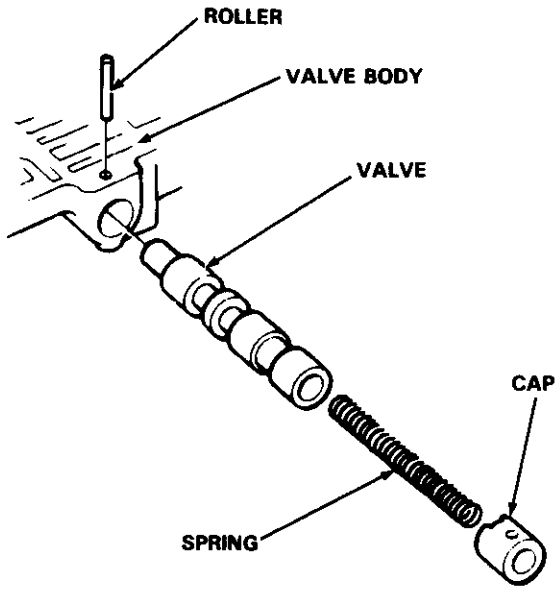

- Set the spring in the valve and install it in the valve body.
  Push the spring in with a screwdriver, then install the spring seat.

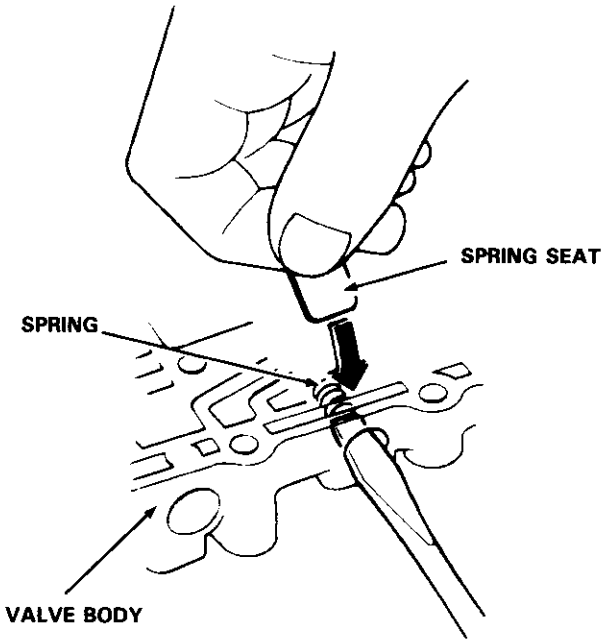

- Install the valve, spring and cap in the valve body. Push the cap, then install the clip.

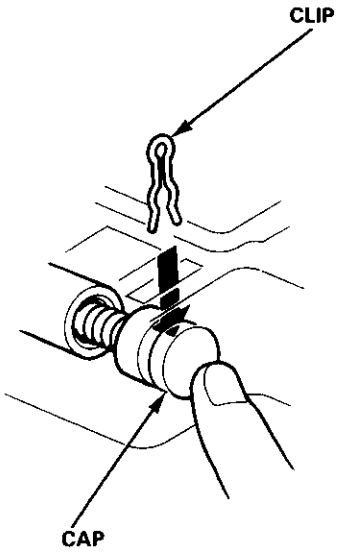

Inspection

1. Install the oil pump gears and oil pump driven gear shaft in the main valve body.

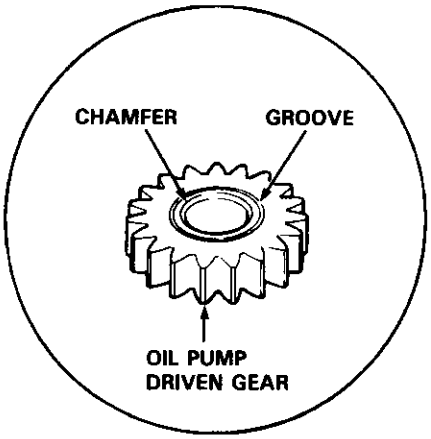

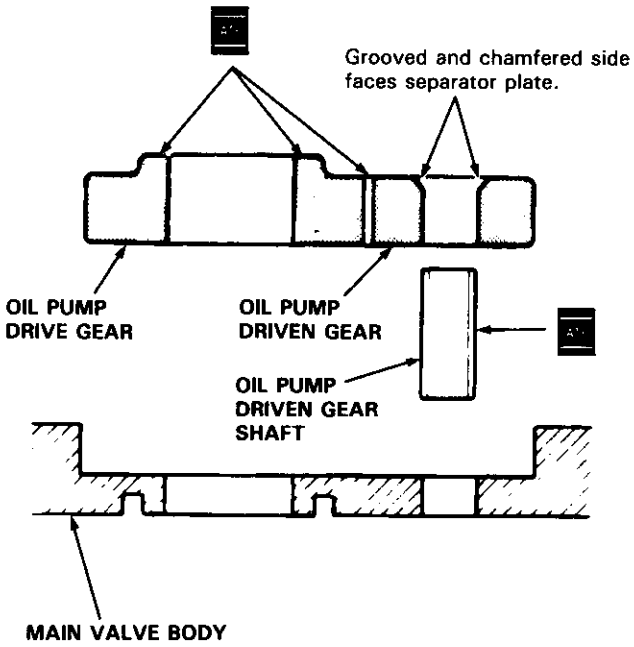

2. Measure the side clearance of the oil pump drive and driven gears.

Oil Pump Gears Side (Radial) Clearance:
Standard (New): Drive gear
0.210–0.265 mm (0.0083–0.0104 in)
Driven gear
0.070–0.125 mm (0.0028–0.0049 in)

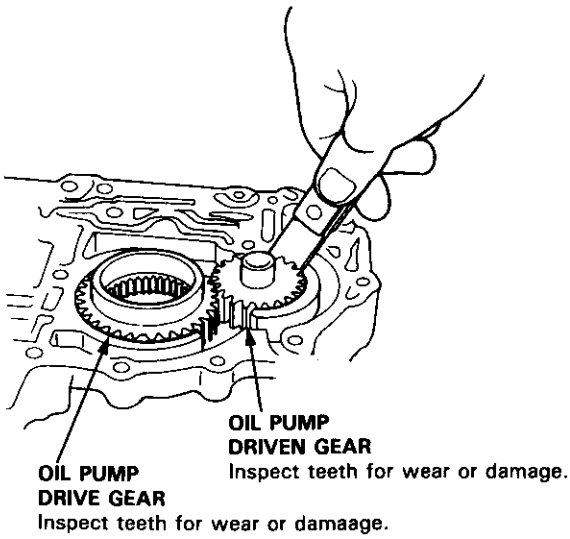

3. Remove the oil pump driven gear shaft, and measure the thrust clearance of the oil pump driven gear-to-main valve body.

Oil pump Drive/Driven Gear thrust (Axial) Clearance:
Standard (New):
0.03–0.05 mm (0.001–0.002 in)
Service Limit:
0.07 mm (0.003 in)

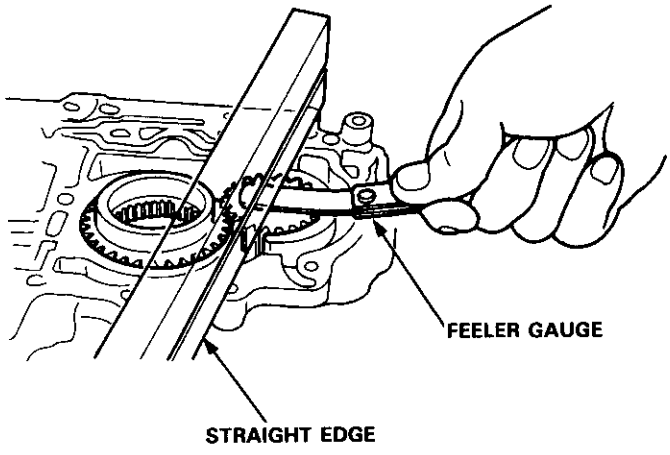

Main Valve Body

Disassembly/Inspection/Reassembly

NOTE:
- Clean all parts thoroughly in solvent or carburetor cleaner and dry with compressed air.
- Blow out all passages.
- Replace valve body as an assembly if any parts are worn or damaged.
- Check all valves for free movement. If any fail to slide freely, see Valve Body Repair on page 14-117.

CAUTION: Do not use a magnet to remove the check balls; it may magnetize the balls.

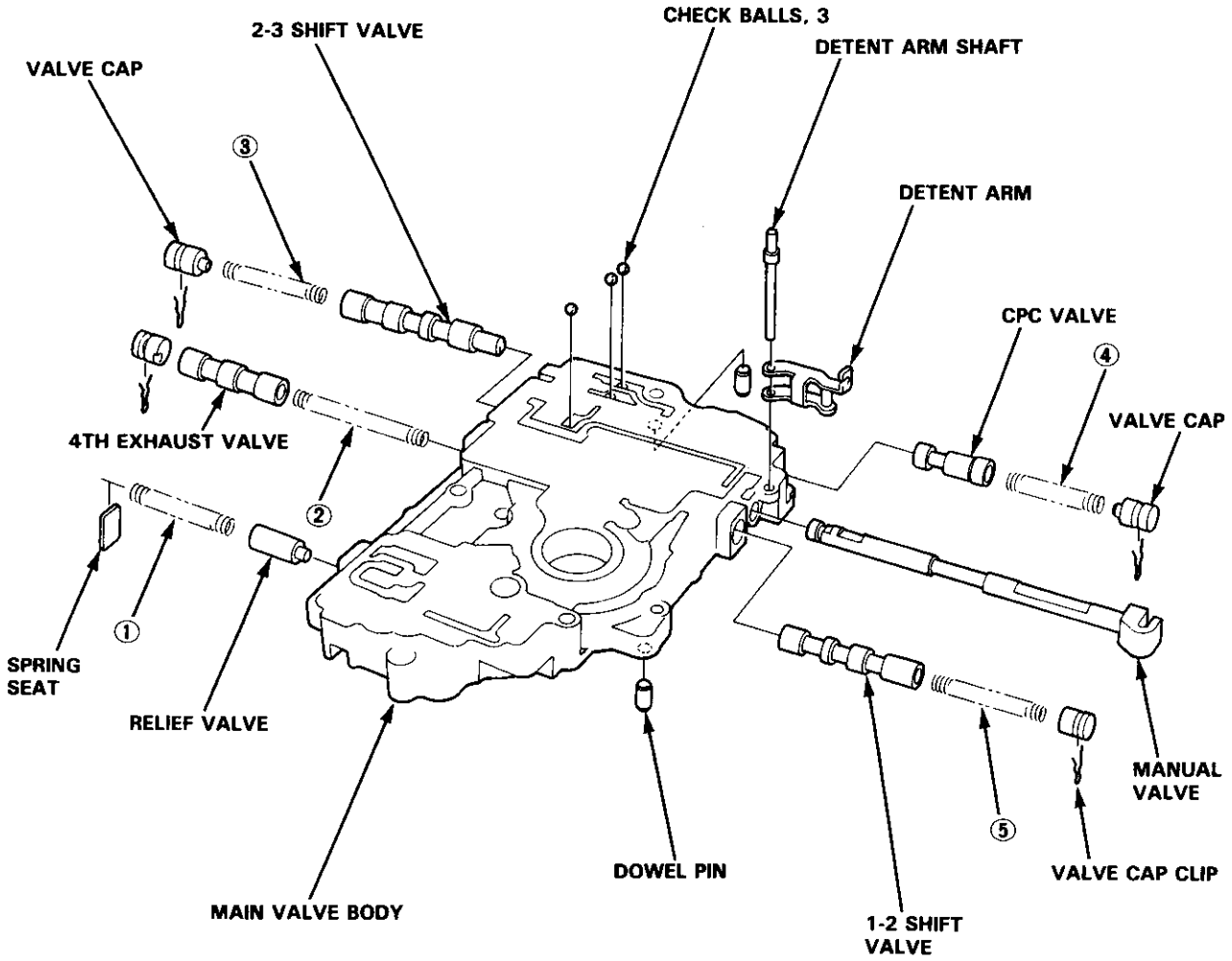

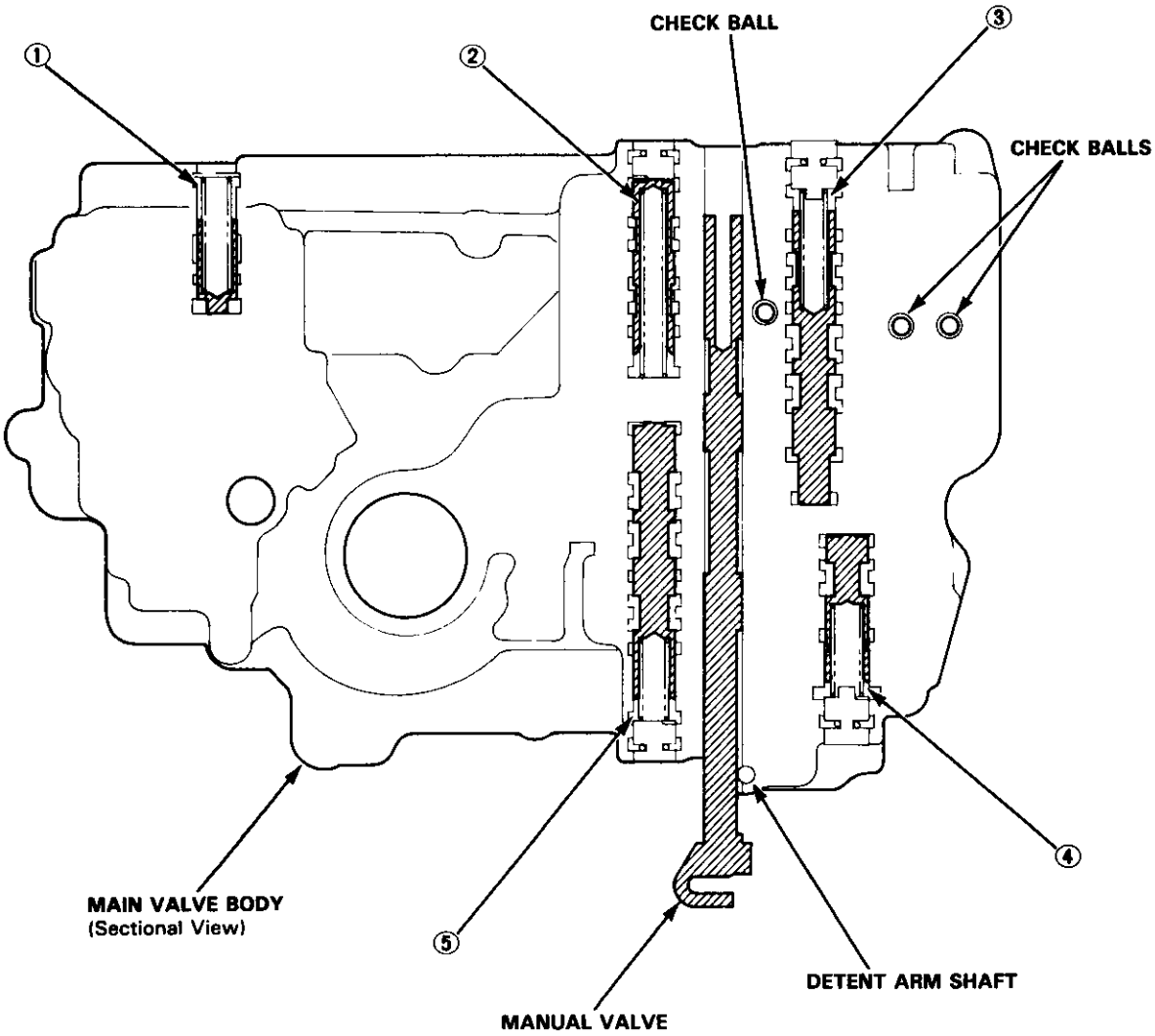

SPRING SPECIFICATIONS

Unit of length: mm (in)

No.	Spring	Standard (New)			
		Wire Dia.	O.D.	Free Length	No. of Coils
①	Relief valve spring	1.1 (0.043)	8.6 (0.339)	37.1 (1.461)	13.4
②	4th exhaust valve spring	1.0 (0.039)	7.1 (0.280)	60.3 (2.374)	18.5
③	2-3 shift valve spring	0.9 (0.035)	7.6 (0.299)	57.0 (2.244)	26.8
④	CPC valve spring	1.3 (0.051)	9.4 (0.370)	35.3 (1.390)	12.4
⑤	1-2 shift valve spring	0.9 (0.035)	8.6 (0.339)	40.4 (1.591)	14.5

Regulator Valve Body

Disassembly/Inspection/Reassembly

NOTE:
- Clean all parts thoroughly in solvent or carburetor cleaner, and dry with compressed air.
- Blow out all passages.
- Replace valve body as an assembly if any parts are worn or damaged.
- Check all valves for free movement. If any fail to slide freely, see Valve Body Repair on page 14-117.

1. Hold the regulator spring cap in place while removing the lock bolt. Once the bolt is removed, release the spring cap slowly.

   CAUTION: The regulator spring cap can pop out when the lock bolt is removed.

2. Reassembly is in the reverse order of the disassembly procedure.

   NOTE:
   - Coat all parts with ATF.
   - Align the hole in the regulator spring cap with the hole in the valve body, press the spring cap into the body and tighten the lock bolt.

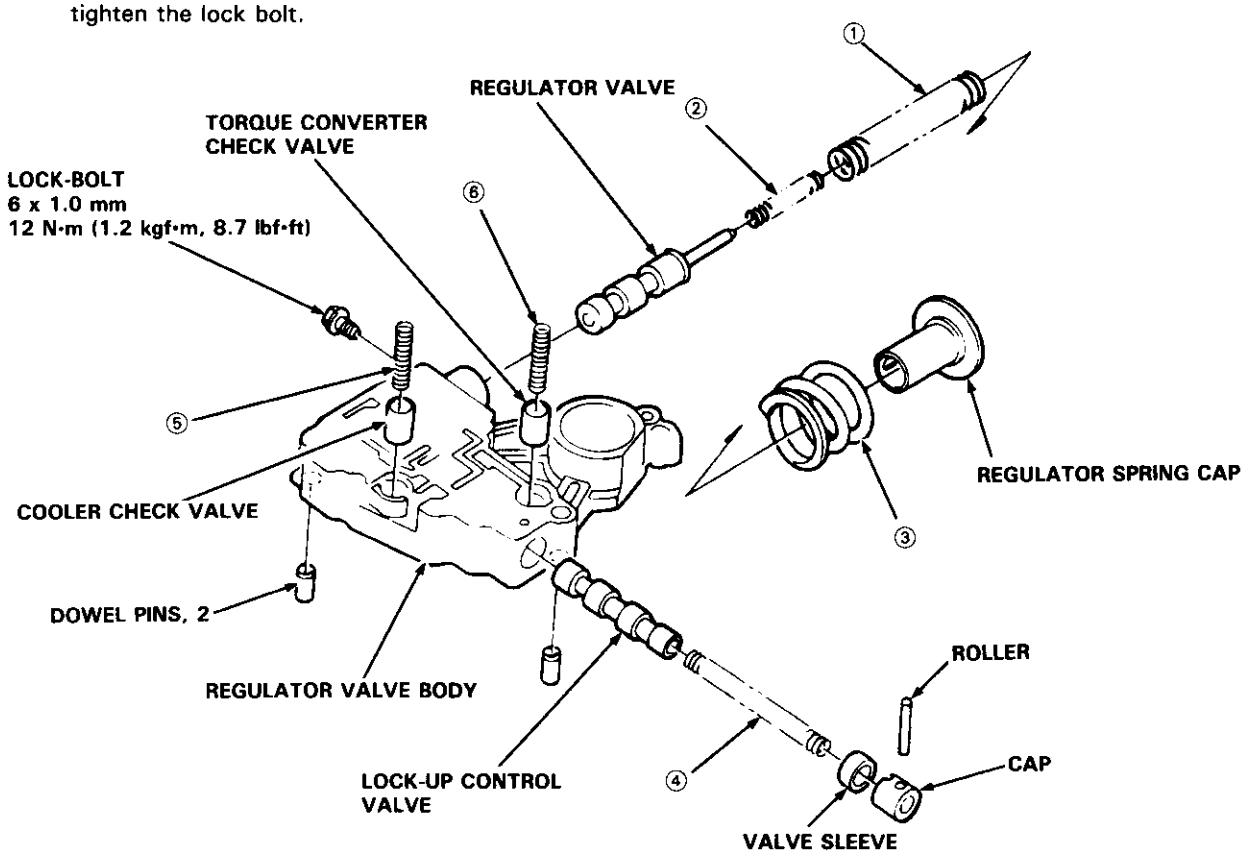

SPRING SPECIFICATIONS

Unit of length: mm (in)

No.	Spring	Standard (New)			
		Wire Dia.	O.D.	Free Length	No. of Coils
①	Regulator valve spring A	1.80 (0.071)	14.70 (0.579)	88.60 (3.488)	16.5
②	Regulator valve spring B	1.80 (0.071)	9.60 (0.378)	44.00 (1.732)	7.5
③	Stator reaction spring	5.50 (0.217)	*26.40 (1.039)	30.30 (1.193)	2.1
④	Lock-up control valve spring	0.80 (0.031)	6.60 (0.260)	39.50 (1.555)	25.0
⑤	Cooler check valve spring	1.10 (0.043)	8.40 (0.331)	33.80 (1.331)	12.5
⑥	Torque converter check valve spring	1.10 (0.043)	8.40 (0.331)	33.80 (1.331)	12.5

*: Inside Diameter

Lock-up Valve Body

Disassembly/Inspection/Reassembly

NOTE:
- Clean all parts thoroughly in solvent or carburetor cleaner, and dry with compressed air.
- Blow out all passages.
- Replace valve body as an assembly if any parts are worn or damaged.
- Check all valves for free movement. If any fail to slide freely, see Valve Body Repair on page 14-117.
- Coat all parts with ATF before reassembly.

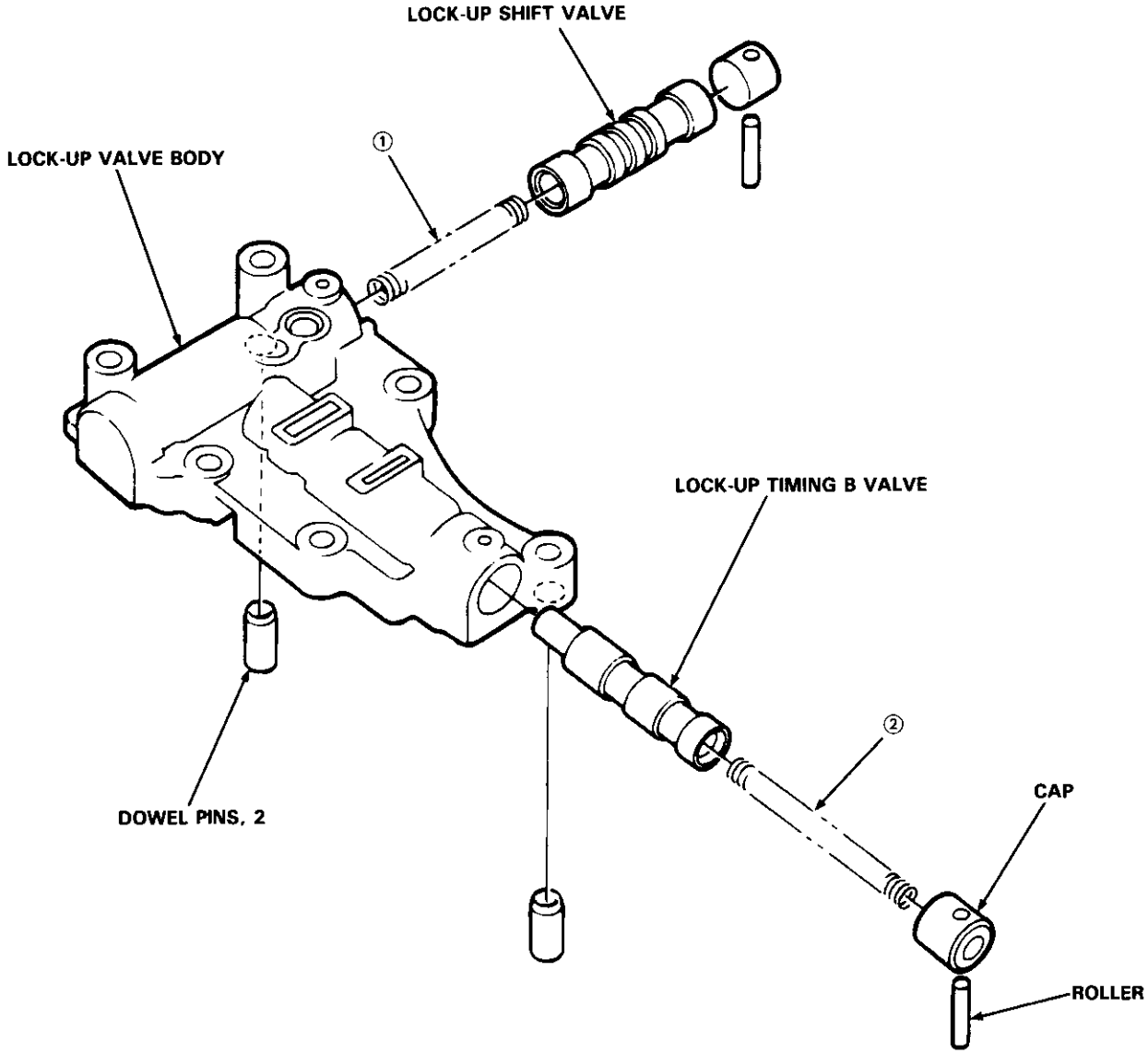

SPRING SPECIFICATIONS

Unit of length: mm (in)

No.	Spring	Standard (New)			
		Wire Dia.	O.D.	Free Length	No. of Coils
①	Lock-up shift valve spring	0.90 (0.035)	7.60 (0.299)	73.70 (2.902)	32.0
②	Lock-up timing B valve spring	0.80 (0.031)	6.60 (0.260)	60.80 (2.394)	22.1

Secondary Valve Body

Disassembly/Inspection/Reassembly

NOTE:
- Clean all parts thoroughly in solvent or carburetor cleaner, and dry with compressed air.
- Blow out all passages.
- Replace valve body as an assembly if any parts are worn or damaged.
- Check all valves for free movement. If any fail to slide freely, see Valve Body Repair on page 14-117.
- Coat all parts with ATF before reassembly.

CAUTION: Do not use a magnet to remove the check balls; it may magnetize the balls.

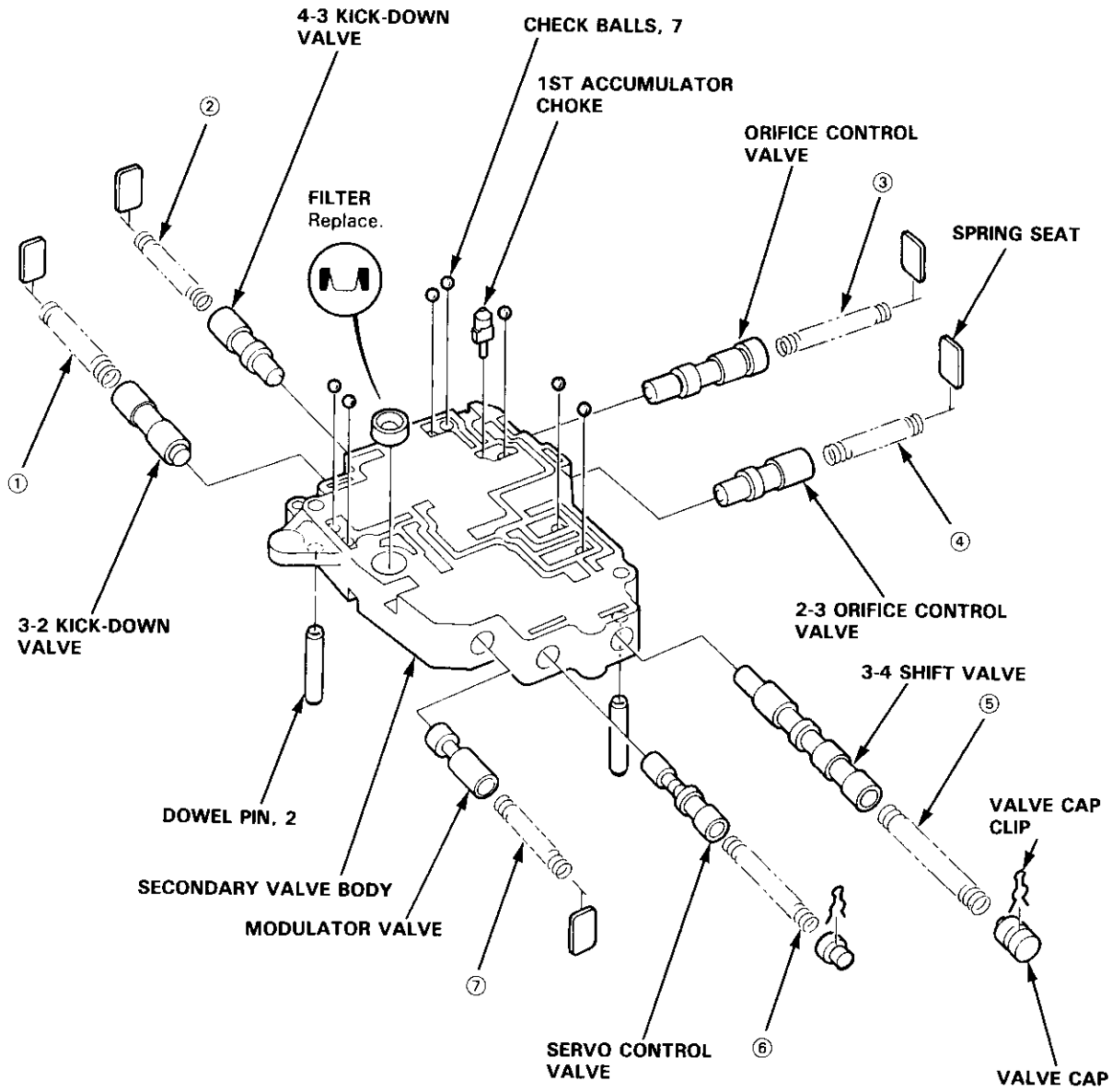

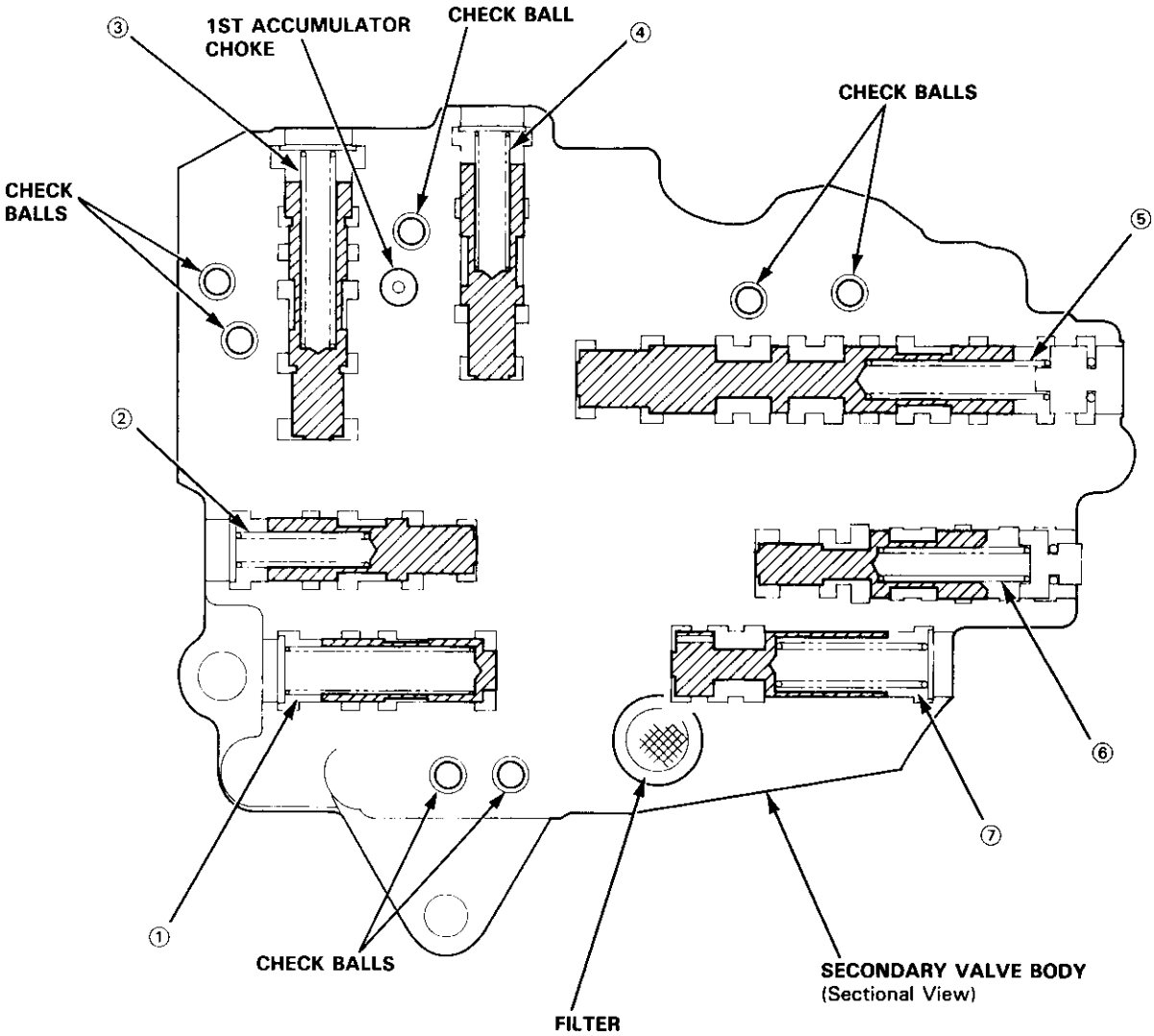

SPRING SPECIFICATIONS

Unit of length: mm (in)

No.	Spring	Standard (New)			
		Wire Dia.	O.D.	Free Length	No. of Coils
①	3-2 kick-down valve spring	1.3 (0.051)	8.6 (0.339)	45.6 (1.795)	17.0
②	4-3 kick-down valve spring	1.0 (0.039)	6.6 (0.260)	28.5 (1.122)	14.7
③	Orifice control valve spring	0.8 (0.031)	6.6 (0.260)	48.2 (1.898)	33.0
④	2-3 orifice control valve spring	0.9 (0.035)	6.6 (0.260)	33.0 (1.299)	14.9
⑤	3-4 shift valve spring	0.9 (0.035)	7.6 (0.299)	52.0 (2.047)	26.8
⑥	Servo control valve spring	0.9 (0.035)	6.4 (0.252)	34.1 (1.343)	17.5
⑦	Modulator valve spring	1.3 (0.051)	9.4 (0.370)	37.3 (1.469)	12.4

Servo Body

Disassembly/Inspection/Reassembly

NOTE:
- Clean all parts thoroughly in solvent or carburetor cleaner, and dry with compressed air.
- Blow out all passages.
- Replace valve body as an assembly if any parts are worn or damaged.
- Coat all parts with ATF before reassembly.
- Replace the O-rings.

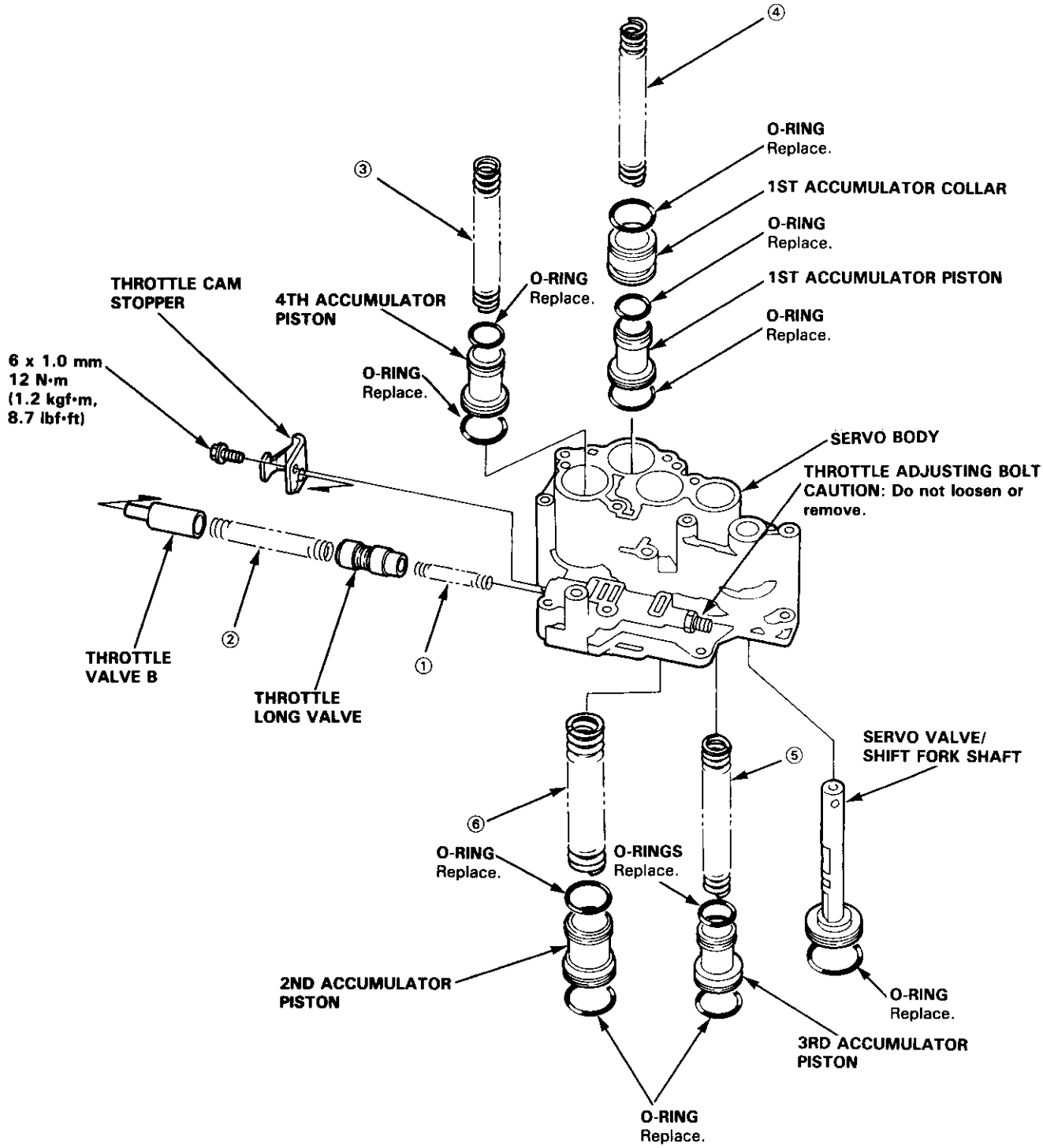

SPRING SPECIFICATIONS

Unit of length: mm (in)

No.	Spring	Standard (New)			
		Wire Dia.	O.D.	Free Length	No. of Coils
①	Throttle valve B adjusting spring	0.7 (0.028)	6.2 (0.244)	34.0 (1.339)	15.2
②	Throttle valve B spring	1.4 (0.055)	8.5 (0.335)	41.5 (1.634)	10.5
②	Throttle valve B spring	1.4 (0.055)	8.5 (0.335)	41.5 (1.634)	11.2
②	Throttle valve B spring	1.4 (0.055)	8.5 (0.335)	41.6 (1.638)	12.4
③	4th accumulator spring	2.6 (0.102)	16.3 (0.642)	103.3 (4.067)	21.2
④	1st accumulator spring	2.5 (0.098)	16.3 (0.642)	105.4 (4.150)	16 + 8.6
⑤	3rd accumulator spring	2.8 (0.110)	17.5 (0.689)	105.2 (4.142)	19.1
⑥	2nd accumulator spring	3.6 (0.142)	22.0 (0.866)	108.9 (4.287)	15.2

1st-hold Accumulator/Right Side Cover

Disassembly/Inspection/Reassembly

NOTE:
- Clean all parts thoroughly in solvent or carburetor cleaner, and dry with compressed air.
- Blow out all passages.
- Coat all parts with ATF before reassembly.

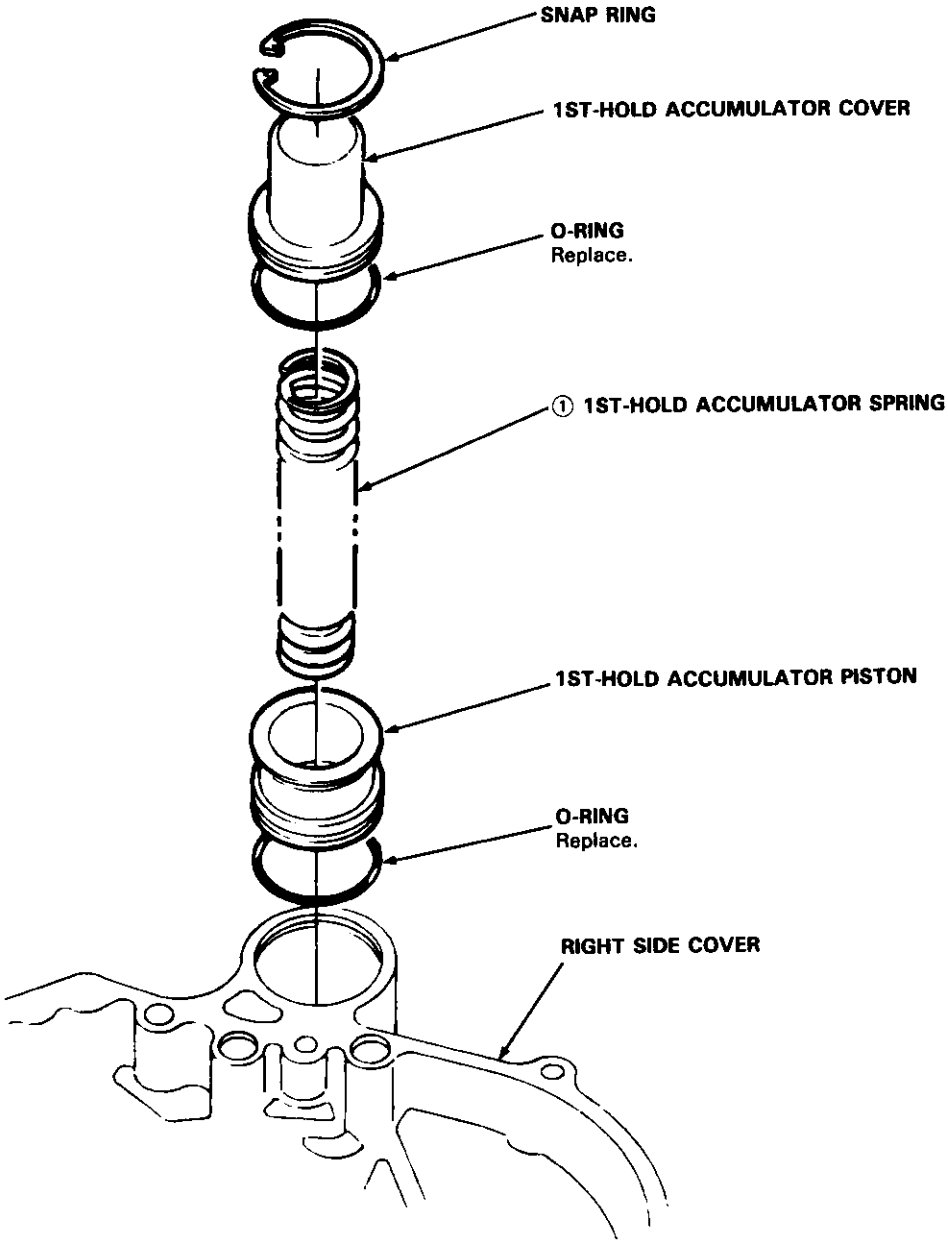

SPRING SPECIFICATIONS

Unit of length: mm (in)

No.	Spring	Standard (New)			
		Wire Dia.	O.D.	Free Length	No. of Coils
①	1st-hold accumulator spring	4.00 (0.157)	21.50 (0.846)	71.70 (2.823)	8.3

Mainshaft

Disassembly/Inspection/Reassembly

NOTE:
- Lubricate all parts with ATF during reassembly.
- Install the thrust needle bearings with unrolled edge of bearing retainer facing washer.
- Inspect the thrust needle bearings and the needle bearings for galling and rough movement.
- Before installing the O-rings, wrap the shaft splines with tape to prevent damaging the O-rings.
- Locknut has left-hand threads.

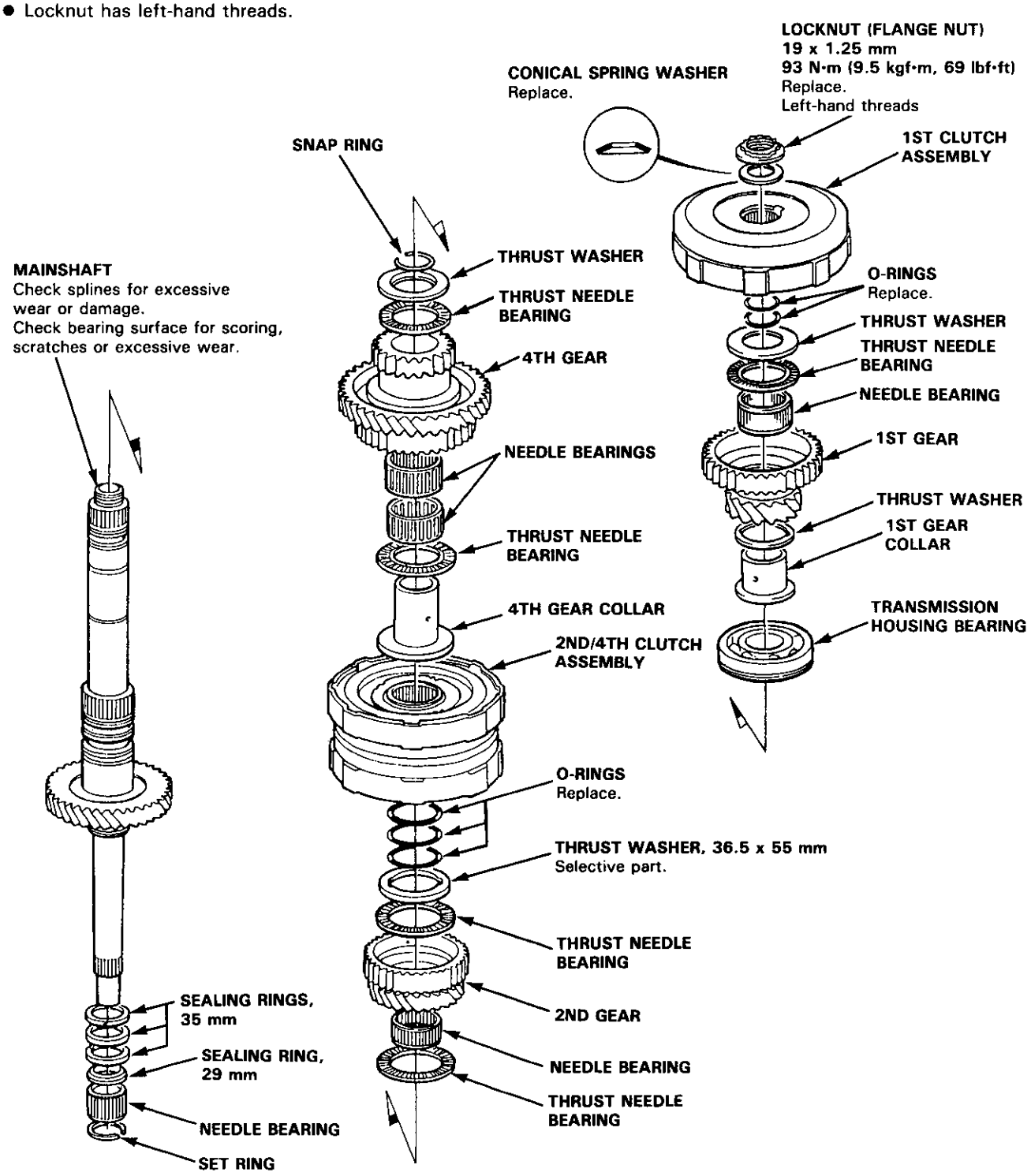

Inspection

- Clearance Measurement

NOTE: Lubricate all parts with ATF during assembly.

1. Remove the mainshaft bearing from the transmission housing (see page 14-152).

2. Assemble the parts below on the mainshaft.

   NOTE: Do not assemble the O-rings while inspecting.

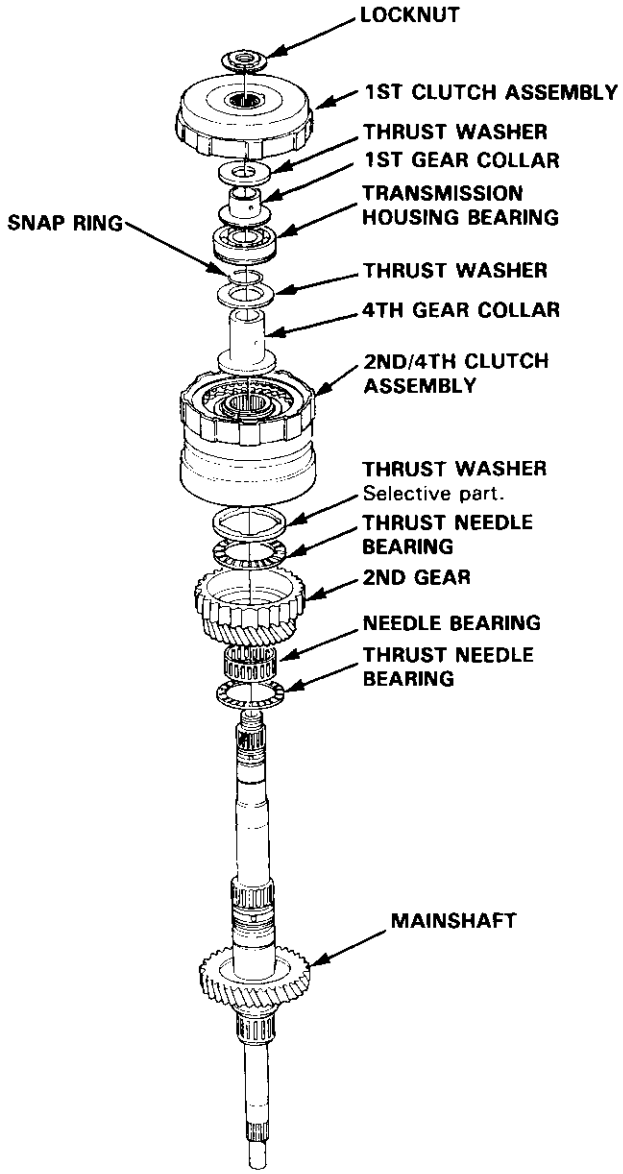

3. Torque the mainshaft locknut to 29 N•m (3.0 kgf•m, 22 lbf•ft).

   NOTE: Mainshaft locknut has left-hand threads.

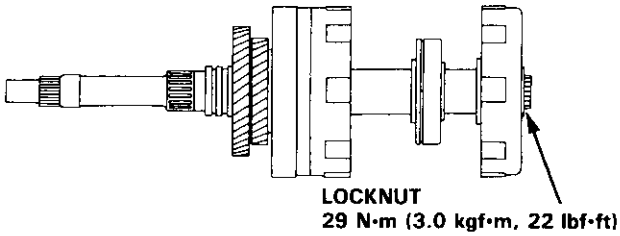

4. Hold 2nd gear against the 2nd clutch, then measure the clearance between 2nd gear and 3rd gear with a feeler gauge.

   NOTE: Take measurements in at least three places and take the average as the actual clearance.

   STANDARD: 0.05–0.13 mm (0.002–0.005 in)

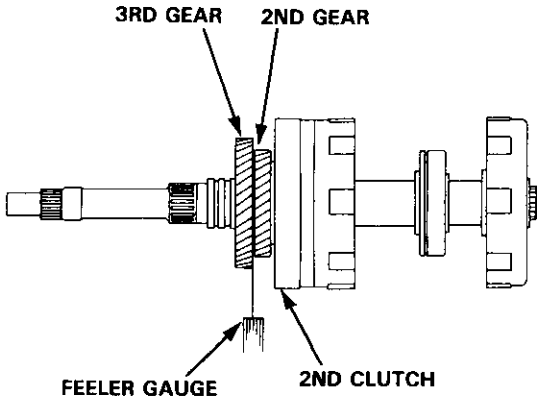

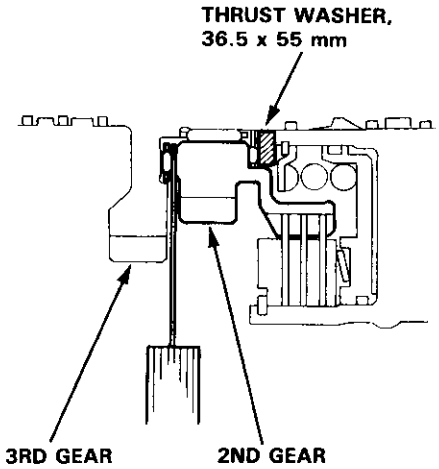

5. If the clearance is out of tolerance, remove the thrust washer and measure the thickness.

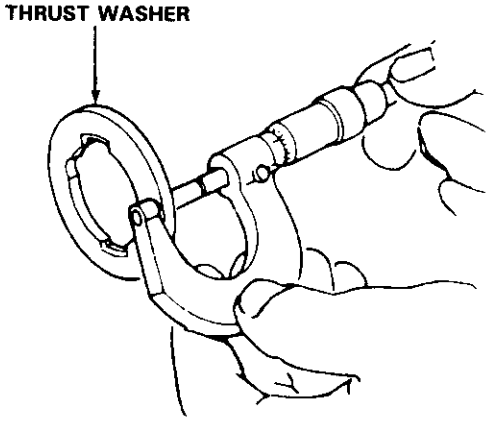

6. Select and install a new washer then recheck.

THRUST WASHER 36.5 x 55 mm

No.	Part Number	Thickness
1	90441–PG4–010	4.00 mm (0.157 in)
2	90442–PG4–010	4.05 mm (0.159 in)
3	90443–PG4–010	4.10 mm (0.161 in)
4	90444–PG4–010	4.15 mm (0.163 in)
5	90445–PG4–010	4.20 mm (0.165 in)
6	90446–PG4–010	4.25 mm (0.167 in)
7	90447–PG4–010	4.30 mm (0.169 in)
8	90448–PG4–010	4.35 mm (0.171 in)
9	90449–PG4–010	4.40 mm (0.173 in)

7. After replacing the thrust washer, make sure the clearance is within tolerance.

Countershaft

Disassembly/Inspection/Reassembly

NOTE:
- Lubricate all parts with ATF before reassembly.
- Install the thrust needle bearings with unrolled edge of bearing retainer facing washer.
- Inspect the thrust needle bearings and the needle bearings for galling and rough movement.
- Before installing the O-rings, wrap the shaft splines with tape to prevent damaging the O-rings.
- Locknut has left-hand threads.

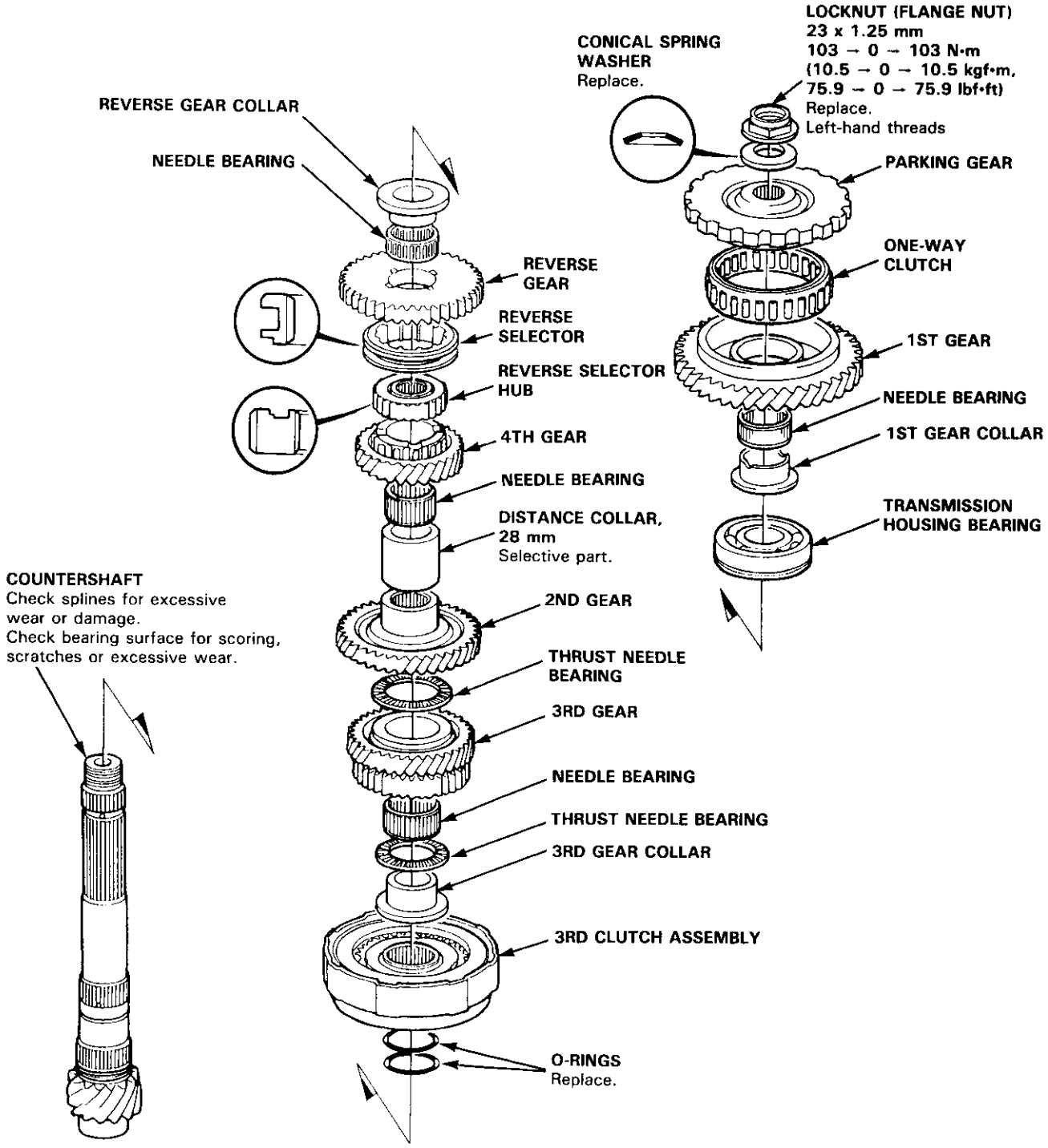

Disassembly/Reassembly

1. Using a hydraulic press, press out the countershaft while supporting 4th gear.

   NOTE: Place an attachment between the press and the countershaft to prevent damage to the shaft.

   CAUTION: Do not allow the countershaft to fall and hit the ground.

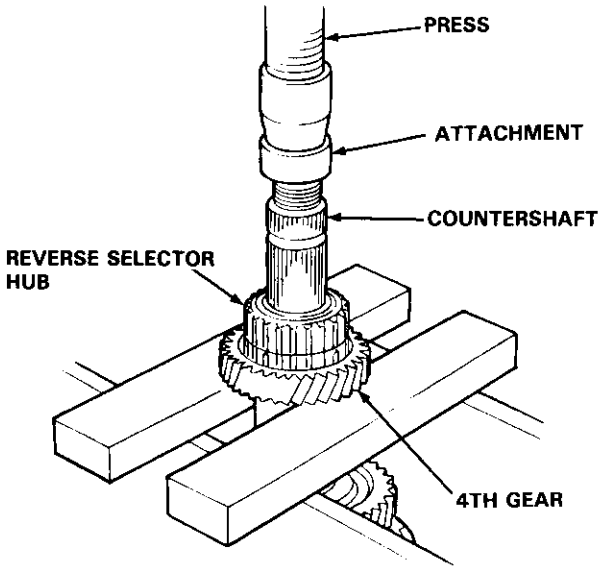

2. Assemble the parts on the countershaft as shown below.

   NOTE:
   - Lubricate all parts with ATF during assembling.
   - Before installing the O-rings, wrap the shaft splines with tape to prevent damaging the O-rings.

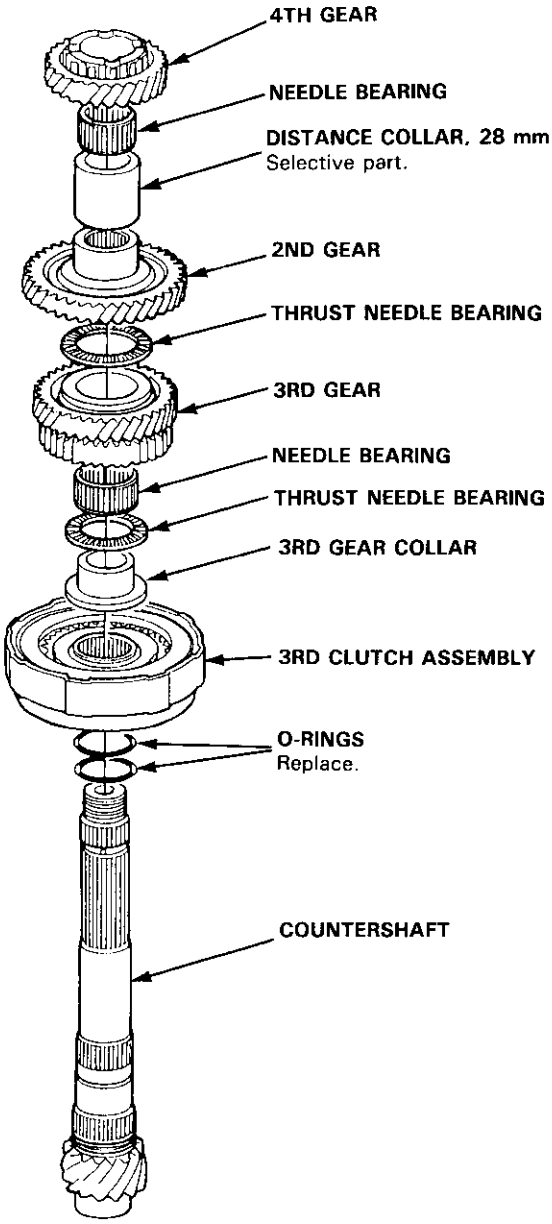

(cont'd)

Disassembly/Reassembly (cont'd)

3. Install the reverse selector hub on the countershaft sub-assembly, and then press the reverse selector hub using the special tool and a press as shown.

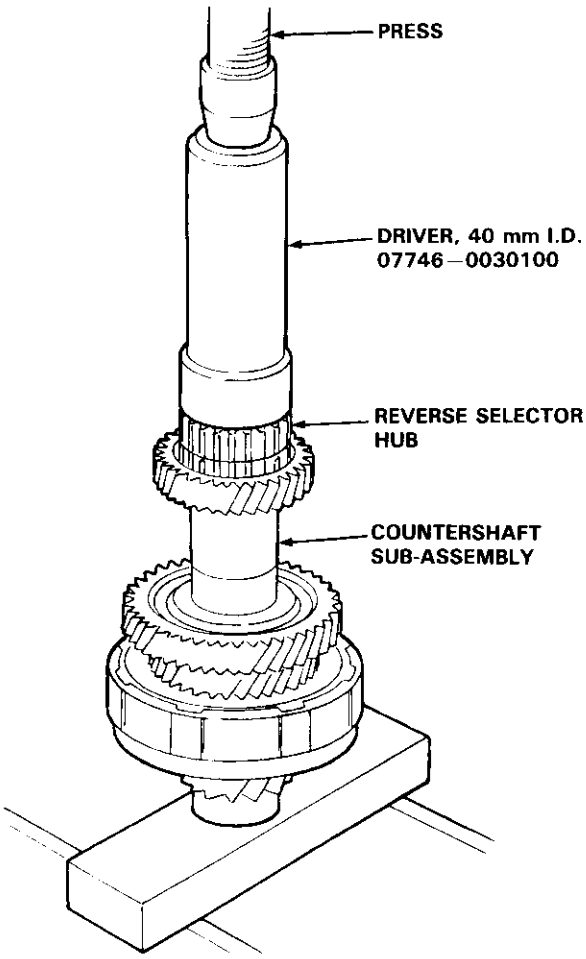

Inspection

- Clearance Measurement

NOTE: Lubricate all parts with ATF during assembly.

1. Remove the countershaft bearing from the transmission housing (see page 14-152).

2. Install the parts below on the countershaft using the special tool and a press as described on this page.

   NOTE: Do not assemble the O-rings while inspecting.

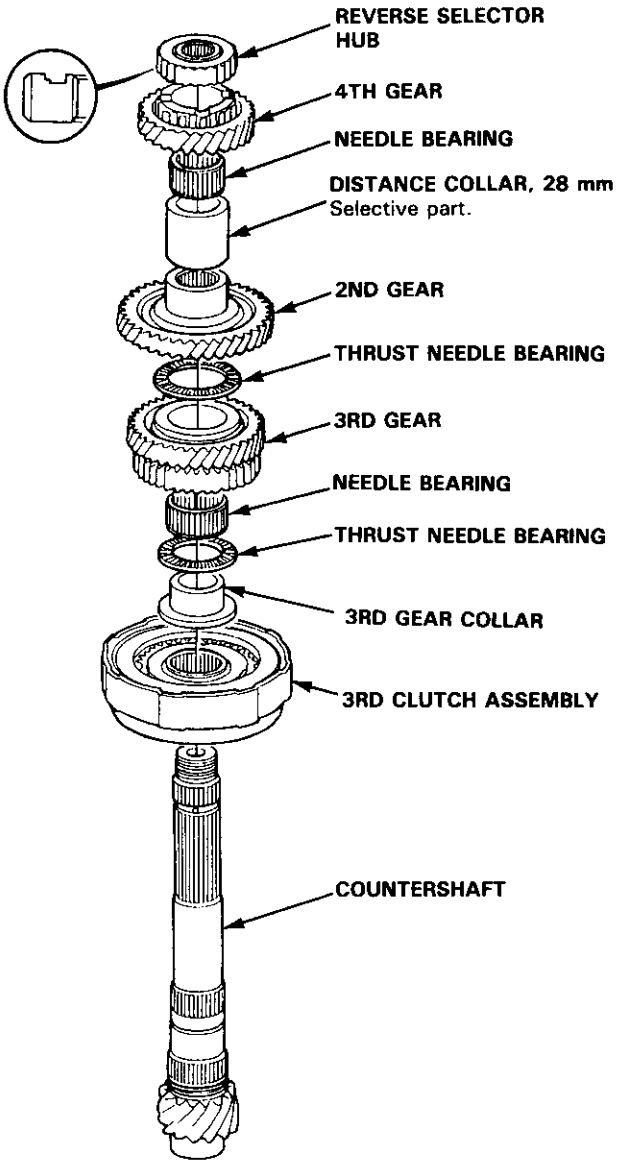

3. Install the parts below on the countershaft sub-assembly, then torque the locknut to 29 N•m (3.0 kgf•m, 22 lbf•ft).

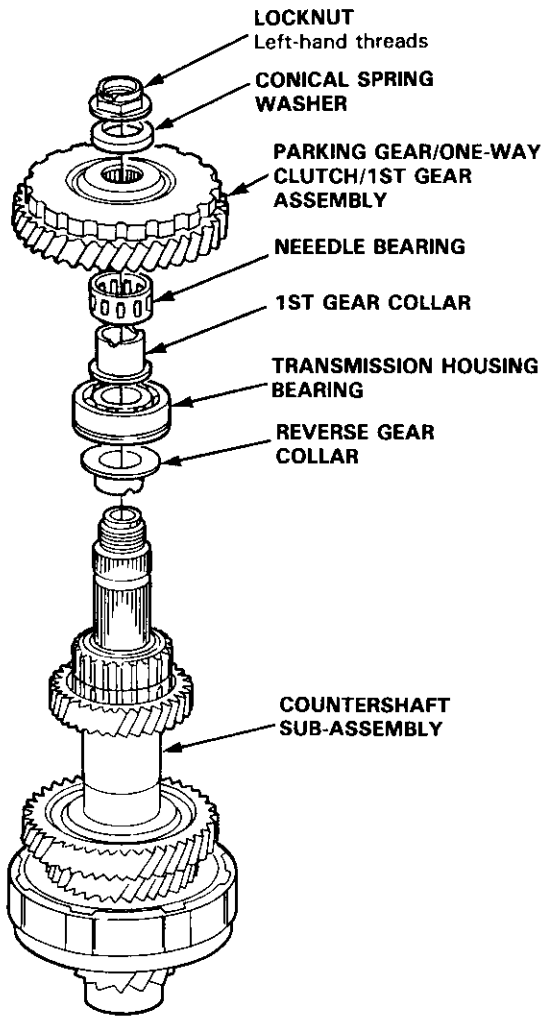

4. Measure the clearance between the 2nd gear and the distance collar, 28 mm with a feeler gauge.

NOTE: Take measurements in at least three places, and take the average as the actual clearance.

STANDARD: 0.05–0.13 mm (0.002–0.005 in)

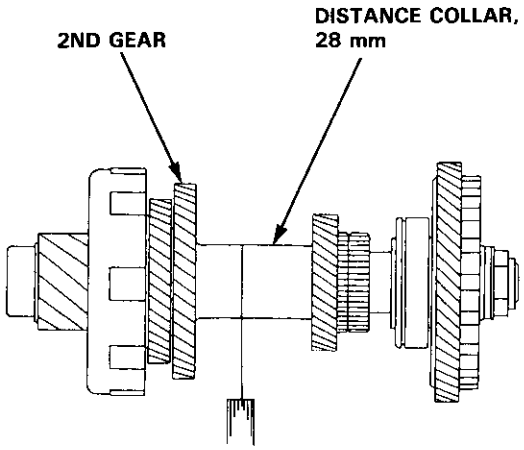

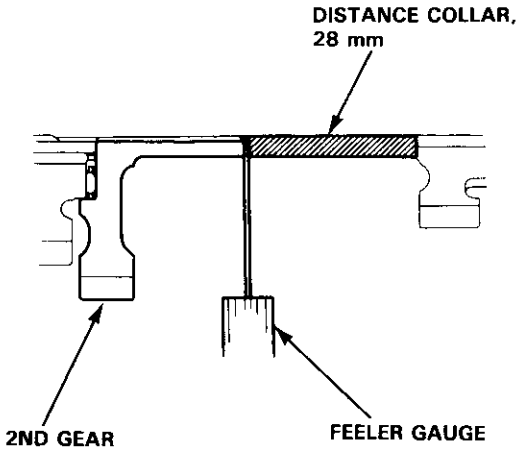

(cont'd)

Inspection (cont'd)

5. If the clearance is out of tolerance, remove the distance collar, 28 mm and measure the width.

6. Select and install a new distance collar, then recheck.

DISTANCE COLLAR, 28 mm

No.	Part Number	Width
1	90503–PC9–000	39.00 mm (1.535 in)
2	90504–PC9–000	39.10 mm (1.539 in)
3	90505–PC9–000	39.20 mm (1.543 in)
4	90507–PC9–000	39.30 mm (1.547 in)
5	90508–PC9–000	39.05 mm (1.537 in)
6	90509–PC9–000	39.15 mm (1.541 in)
7	90510–PC9–000	39.25 mm (1.545 in)
8	90511–PC9–000	38.90 mm (1.531 in)
9	90512–PC9–000	38.95 mm (1.533 in)

7. After selecting a new distance collar, recheck the clearance and make sure it is within tolerance.

One-way Clutch/Parking Gear

Disassembly/Inspection

1. Separate countershaft 1st gear from the parking gear by turning the parking gear in the direction shown.

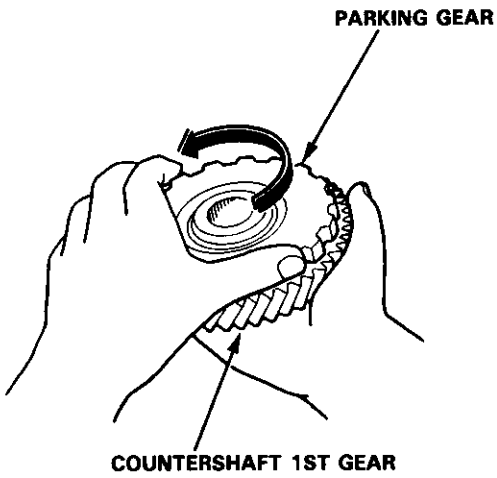

2. Remove the one-way clutch by prying it up with the end of a screwdriver.

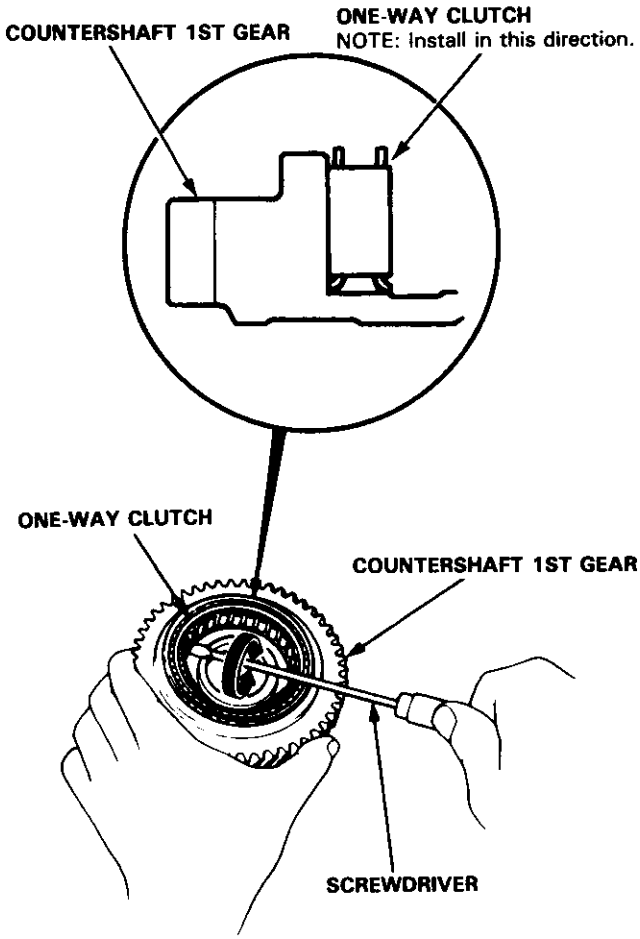

Inspect the parts as follows:

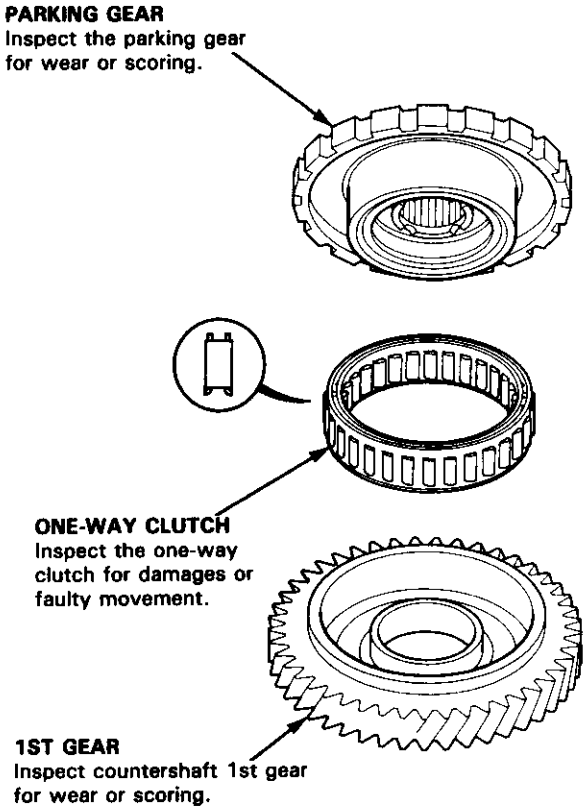

3. After the parts are assembled, hold countershaft 1st gear and turn the parking gear in the direction shown to be sure it turns freely.

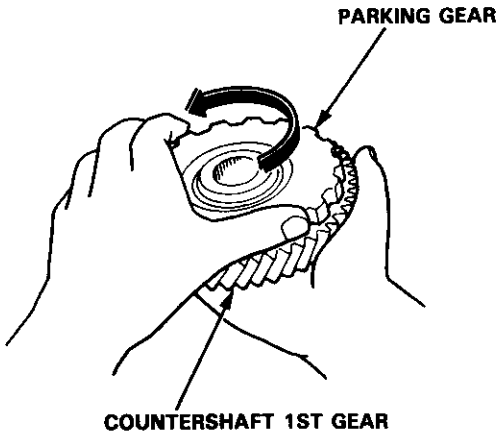

Sub-shaft

Disassembly/Inspection/Reassembly

NOTE:
- Lubricate all parts with ATF during reassembly.
- Install the thrust needle bearings with unrolled edge of bearing retainer facing washer.
- Inspect the thrust needle bearings and the needle bearings for galling and rough movement.
- Before installing the O-rings, wrap the shaft splines with tape to prevent damaging the O-rings.

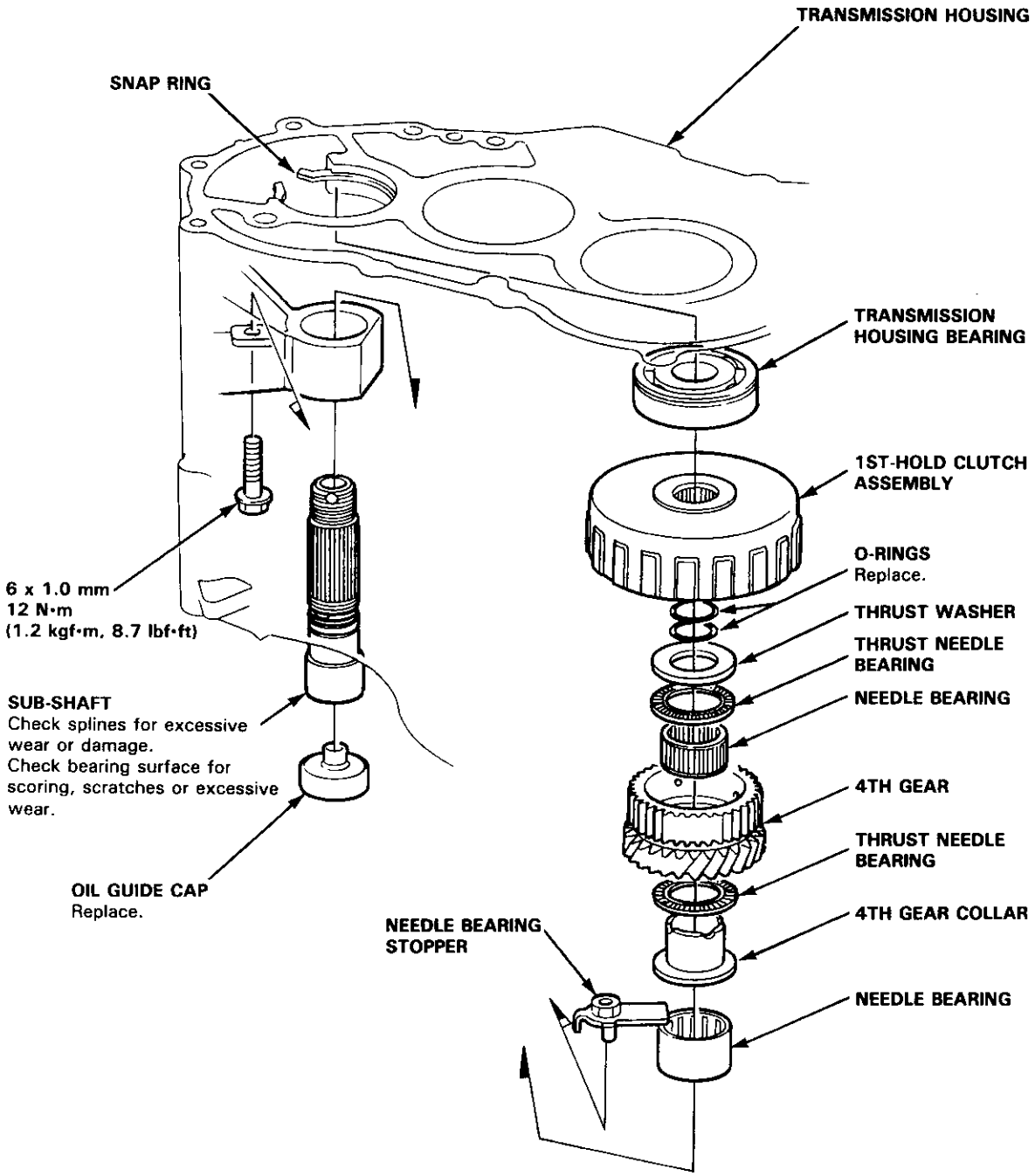

Disassembly/Reassembly

1. Remove the oil guide cap by pushing the sub-shaft inside the transmission housing.

2. Remove the 1st-hold clutch assembly by pulling the sub-shaft, then remove the sub-shaft.

3. Install new O-rings on the sub-shaft.

   NOTE: Wrap the shaft splines with tape to prevent damaging the O-rings.

4. Place the sub-shaft in the transmission housing and install the 1st-hold clutch assembly.

5. Install new oil guide cap using the special tools as shown.

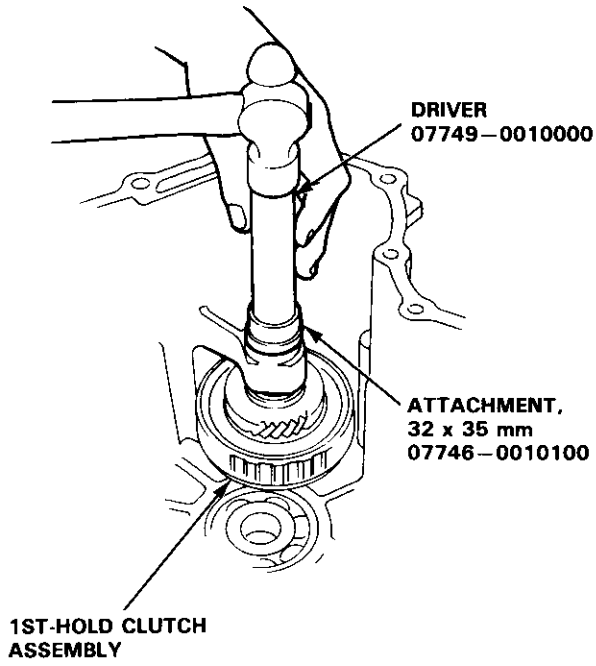

Sub-shaft Bearings

Replacement

NOTE: Lubricate all parts with ATF before reassembly.

1. To remove the sub-shaft ball bearing from the transmission housing, expand the snap ring with snap ring pliers, then push the bearing out using the special tools and a press as shown.

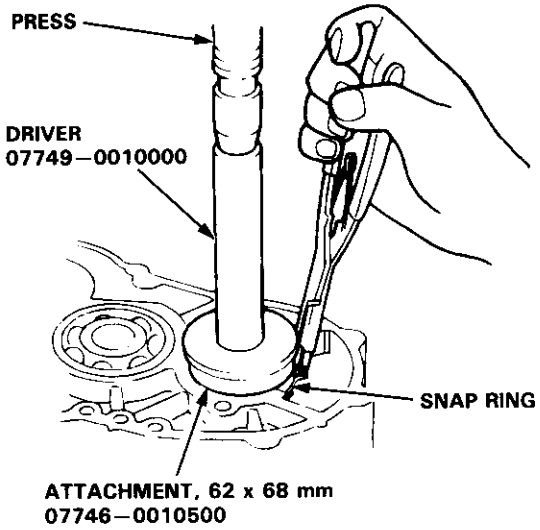

2. Remove the needle bearing stopper.

3. Remove the needle bearing from the transmission housing using a drift punch.

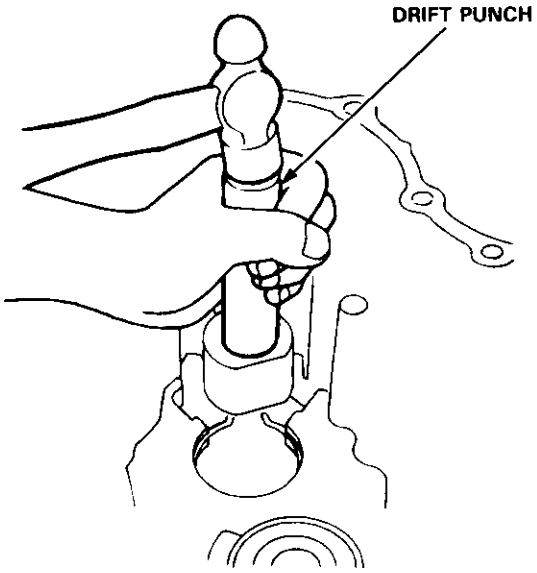

4. Install the new needle bearing in the transmission housing using the special tools and a press as shown.

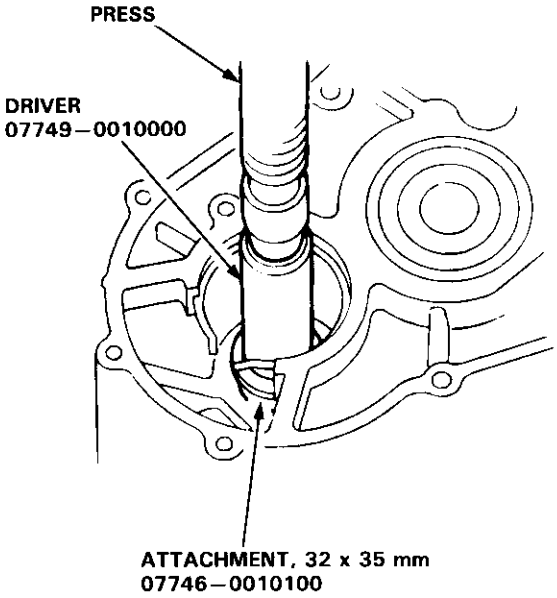

5. Expand the snap ring with snap ring pliers, then insert the ball bearing part-way into the housing using the special tools and a press as described in step 1. Install the bearing with the groove facing outside the housing.

6. Release the pliers, then push the bearing down into the housing until the snap ring snaps in place around it.

7. After installing the ball bearing, verify the following:

   - The snap ring is seated in the bearing and housing grooves.
   - The snap ring operates properly.
   - The ring end gap is correct.

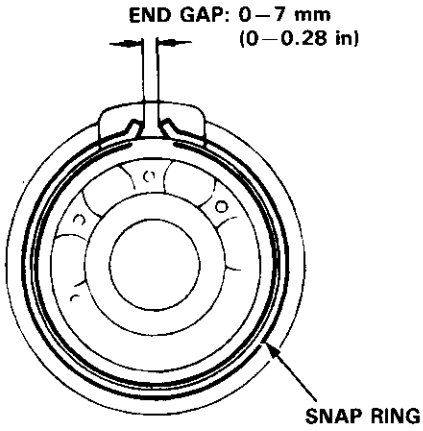

Illustrated Index

3RD CLUTCH

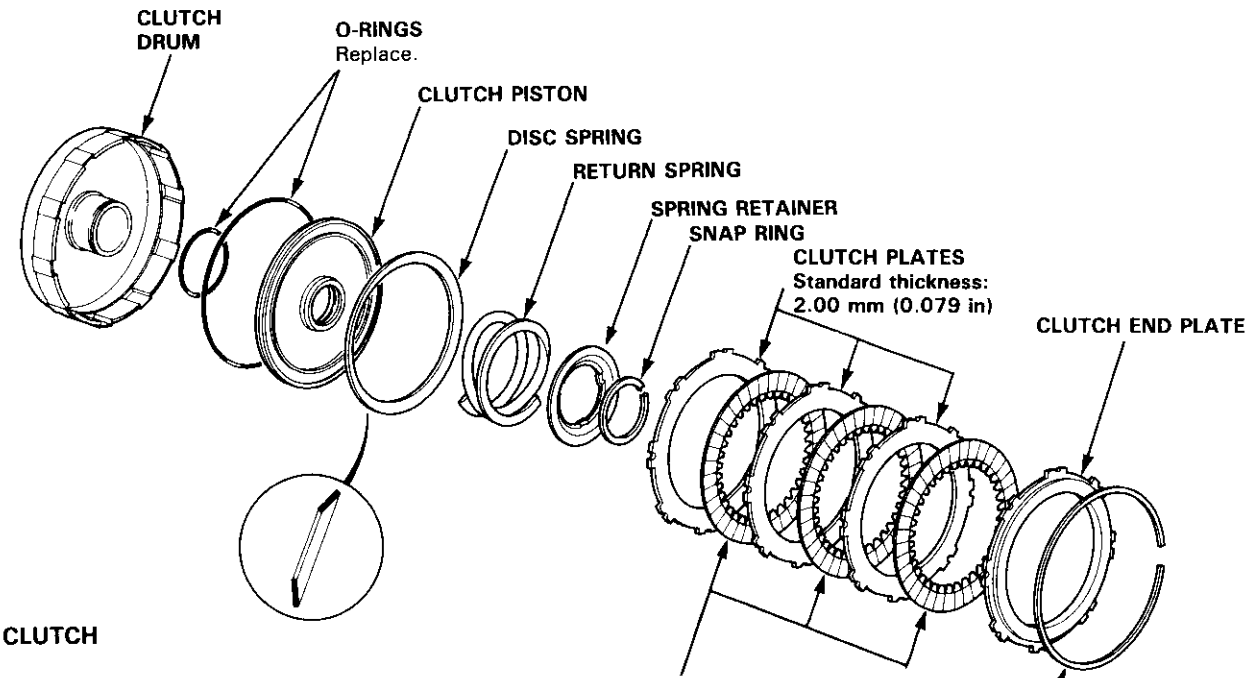

1ST CLUTCH

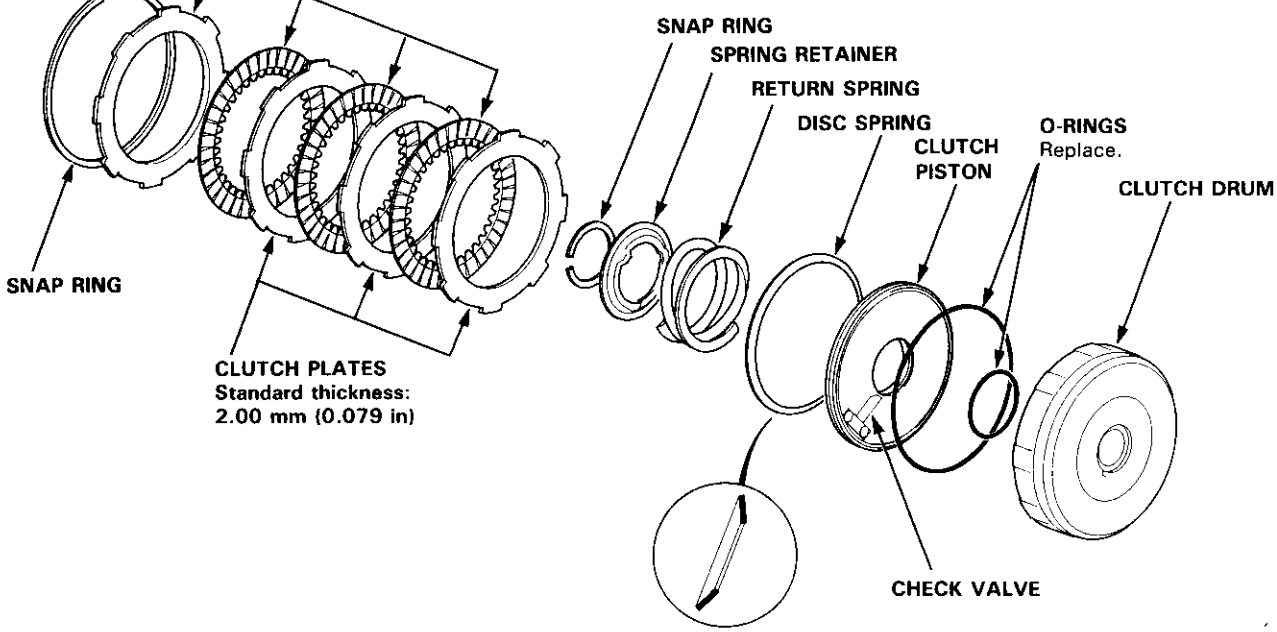

(cont'd)

Illustrated Index (cont'd)

2ND/4TH CLUTCH

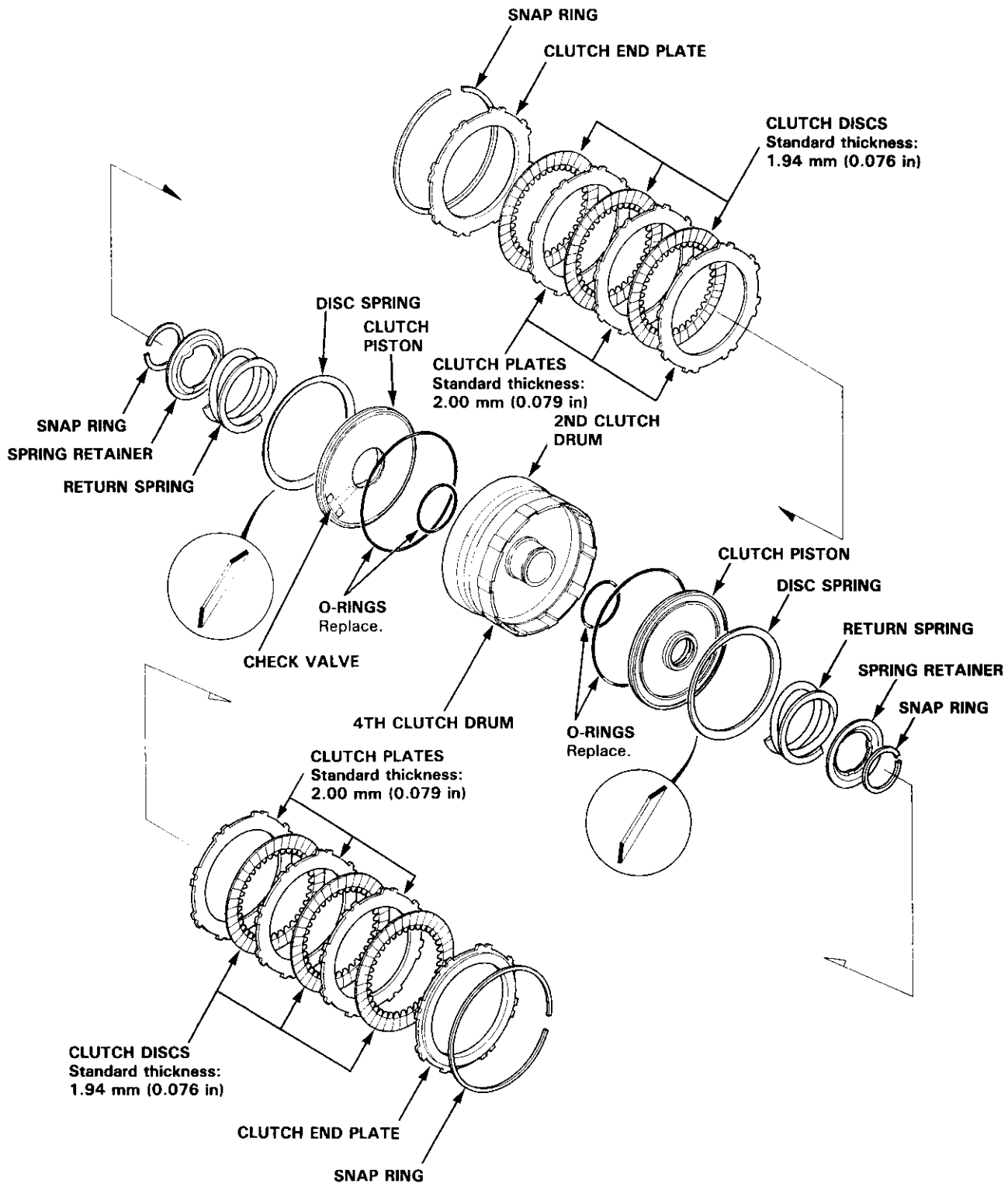

1ST-HOLD CLUTCH

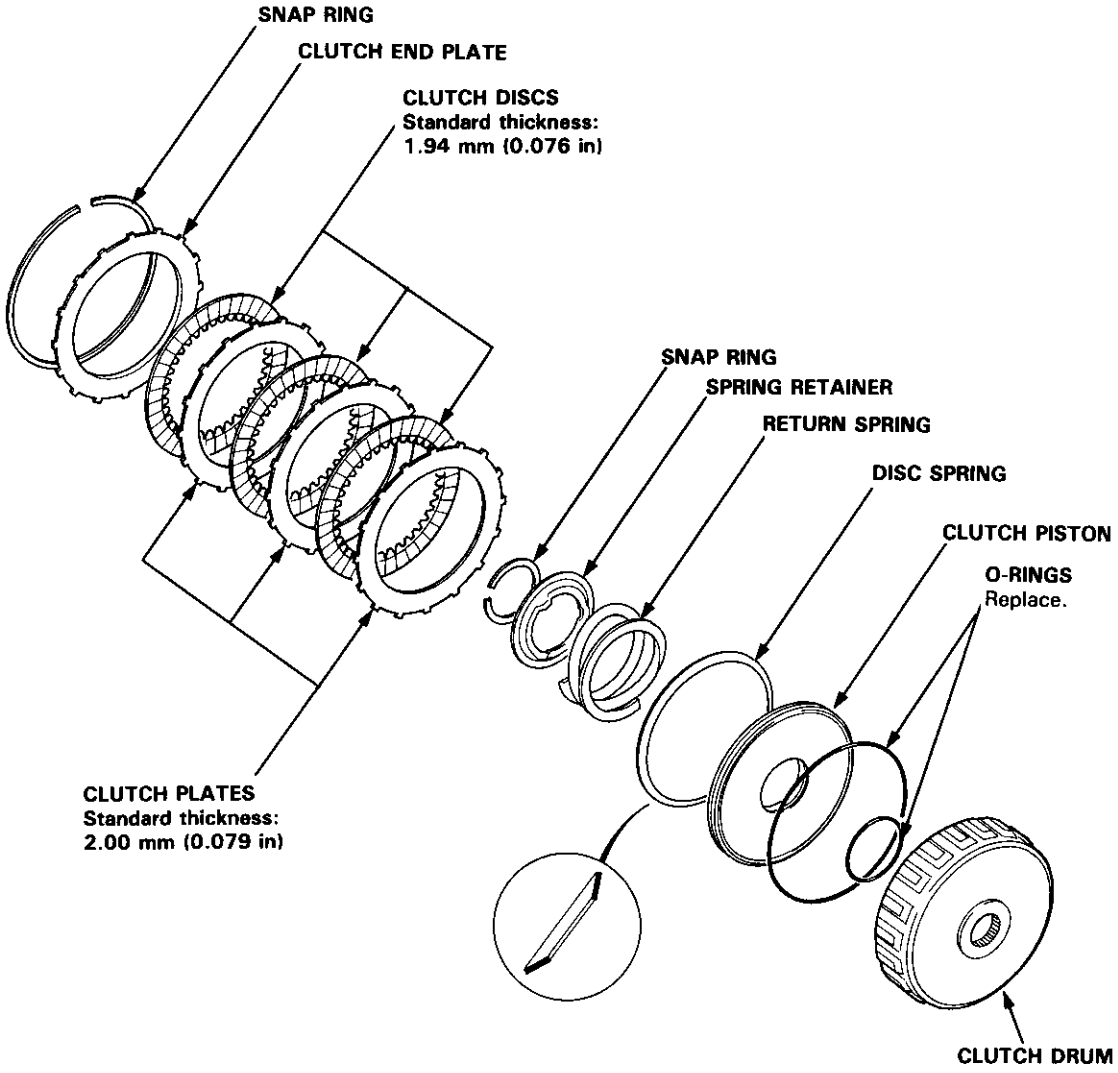

Disassembly

1. Remove the snap ring, then remove the clutch end plate, clutch discs and plates.

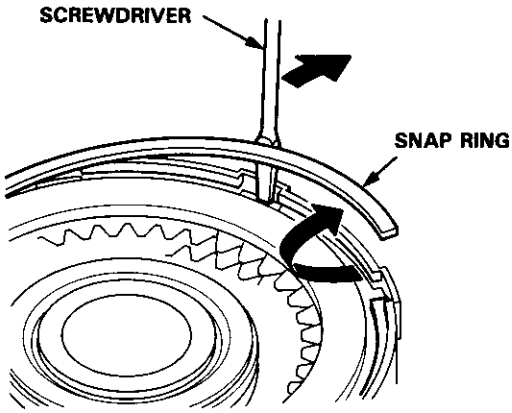

2. Remove the disc spring.

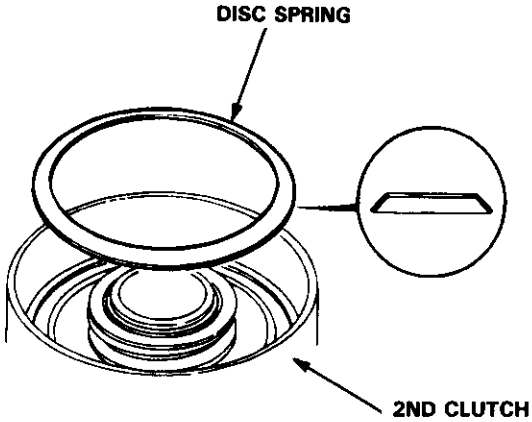

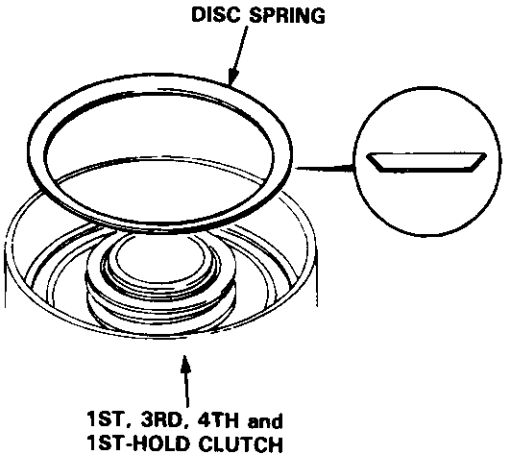

3. Install the special tools as shown.

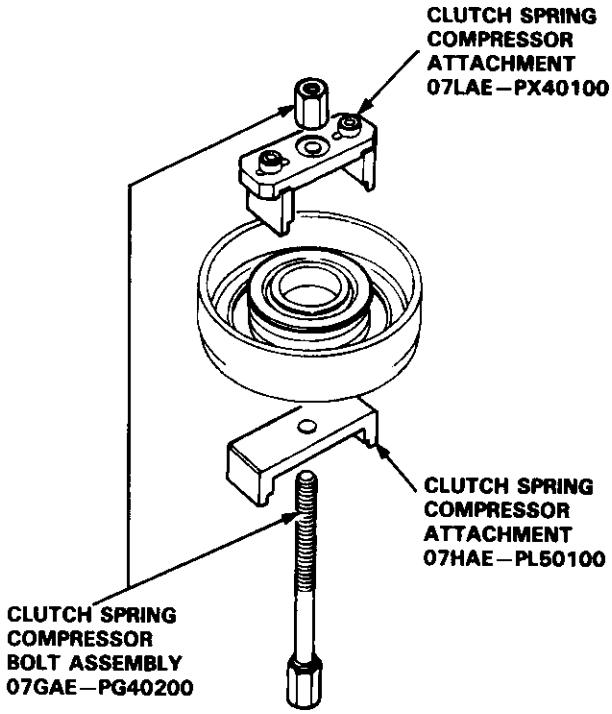

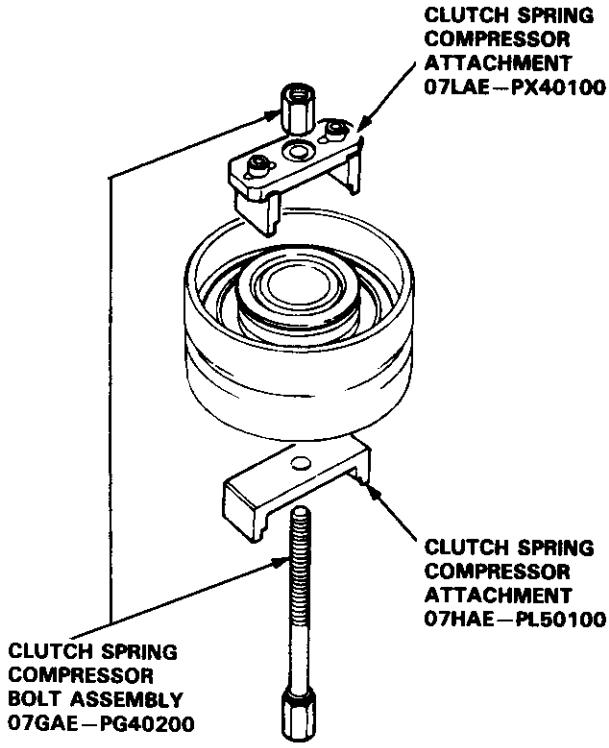

CAUTION: If either end of the compressor attachment is set over an area of the spring retainer which is unsupported by the return spring, the retainer may be damaged.

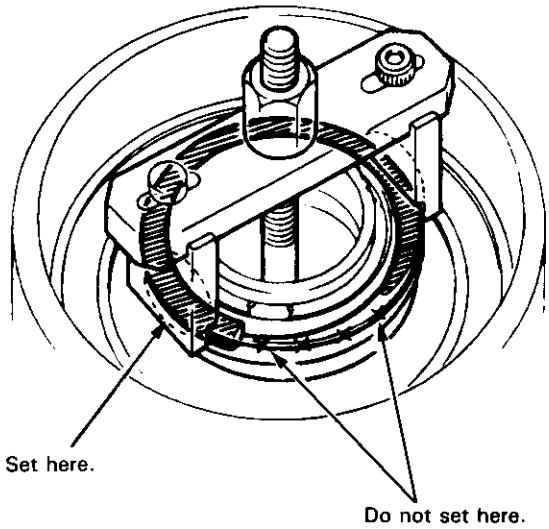

4. Compress the return spring.

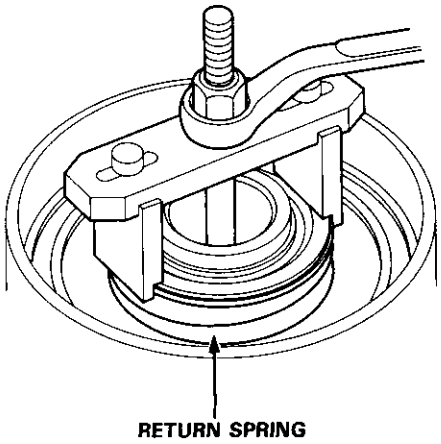

5. Remove the snap ring. Then remove the special tools, spring retainer and return spring.

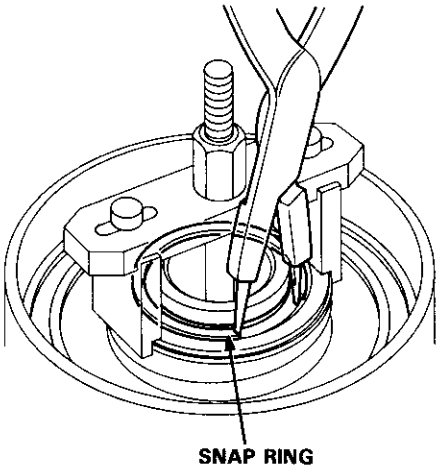

6. Wrap a shop towel around the clutch drum and apply air pressure to the oil passage to remove the piston. Place a finger tip on the other end while applying air pressure.

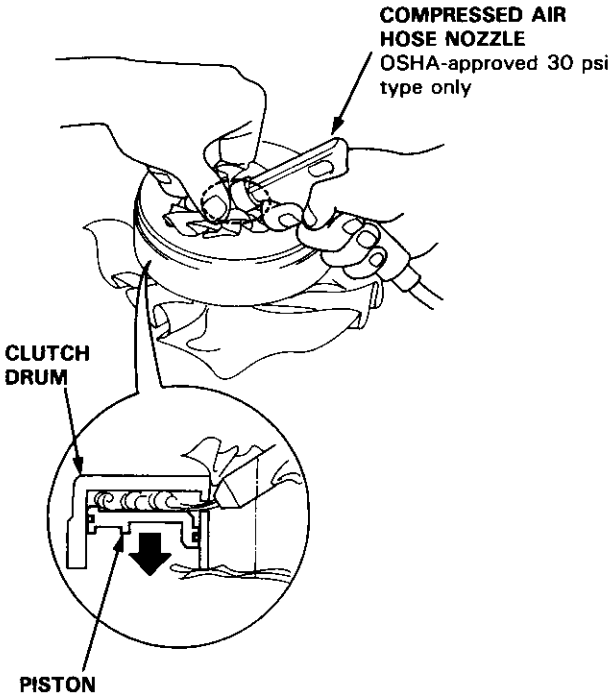

Reassembly

NOTE:
- Clean all parts thoroughly in solvent or carburetor cleaner, and dry them with compressed air.
- Blow out all passages.
- Lubricate all parts with ATF before reassembly.

1. Inspect the check valve; if it's loose, replace the piston.

   NOTE: Except 1st-hold clutch.

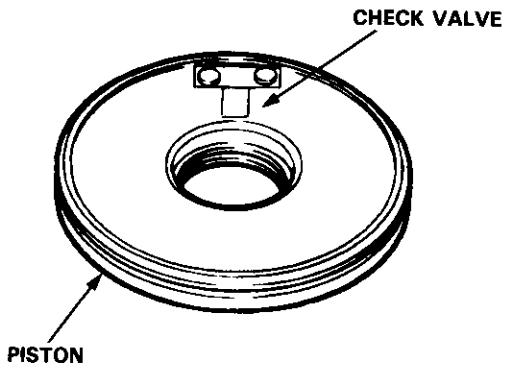

2. Install new O-rings on the clutch piston.

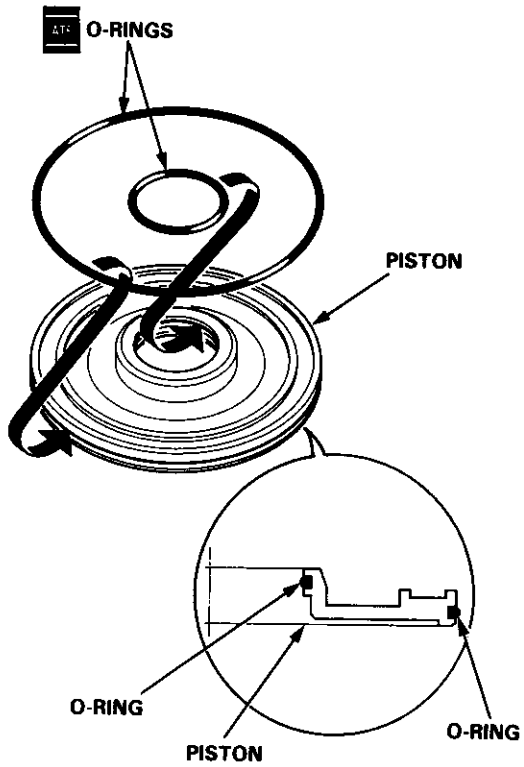

3. Install the piston in the clutch drum. Apply pressure and rotate to ensure proper seating.

   NOTE: Lubricate the piston O-ring with ATF before installing.

   CAUTION: Do not pinch the O-ring by installing the piston with too much force.

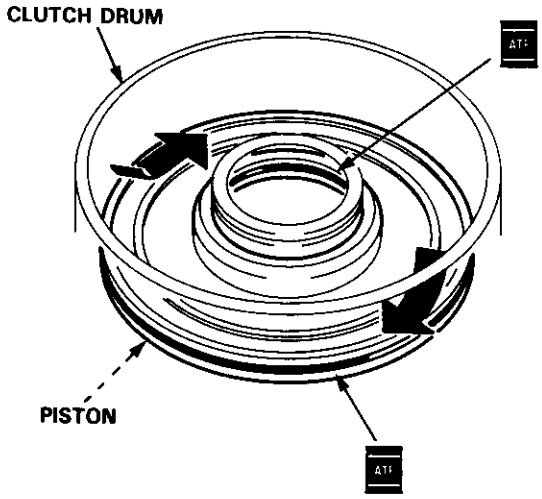

4. Install the return spring and spring retainer, and position the snap ring on the retainer.

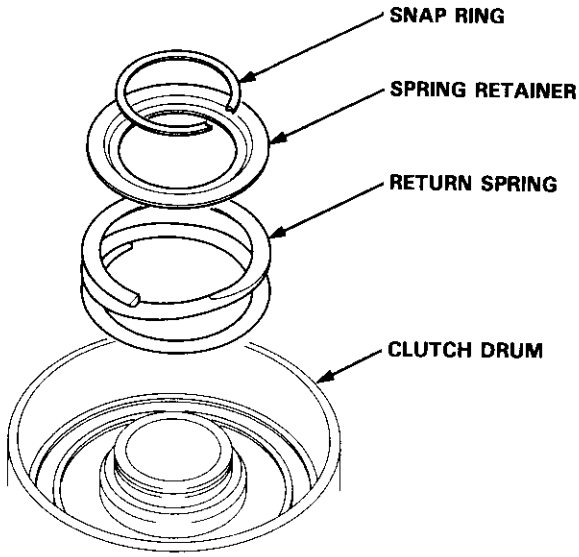

5. Install the special tools as shown.

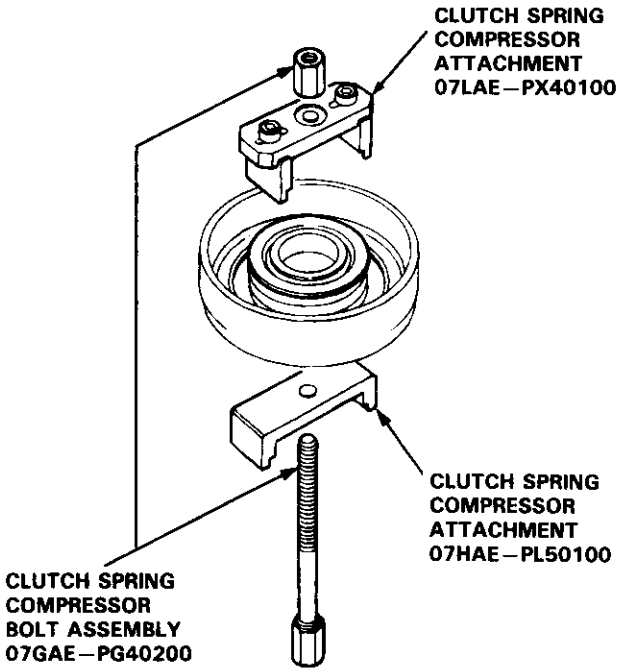

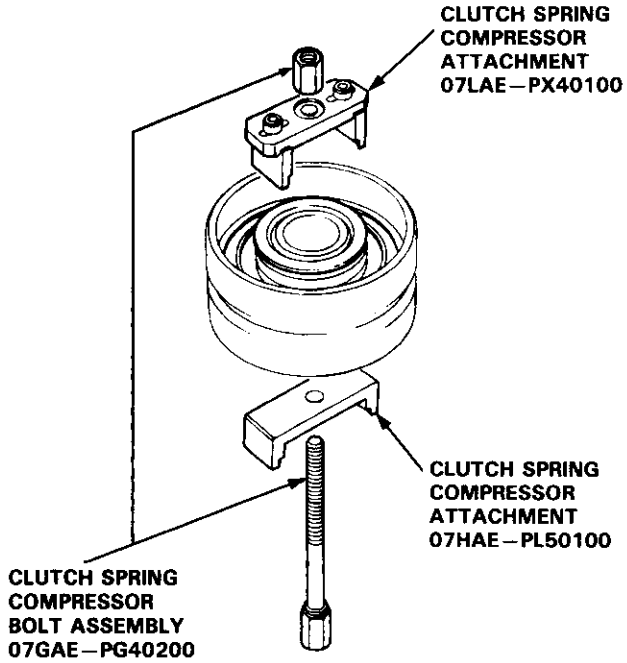

CAUTION: If either end of the compressor attachment is set over an area of the spring retainer which is unsupported by the return spring, the retainer may be damaged.

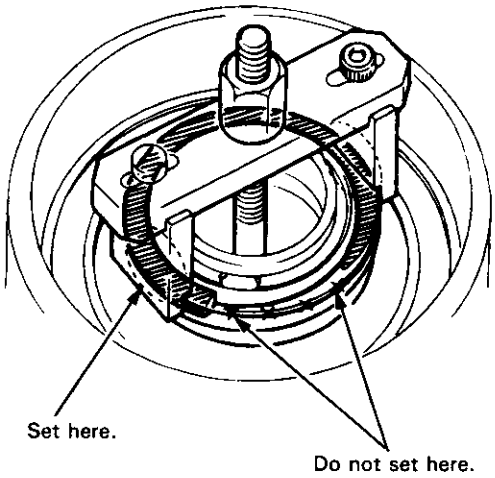

6. Compress the return spring.

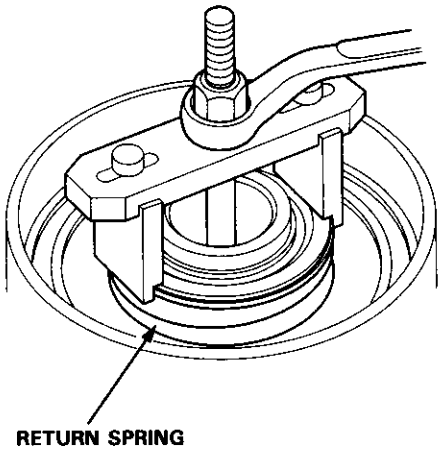

(cont'd)

Reassembly (cont'd)

7. Install the snap ring.

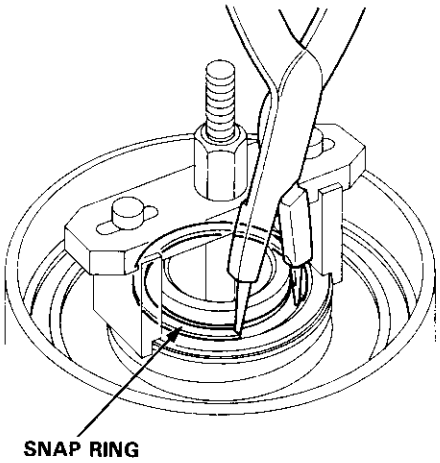

8. Remove the special tools.

9. Install the disc spring.

   NOTE: Install the disc spring in the direction shown.

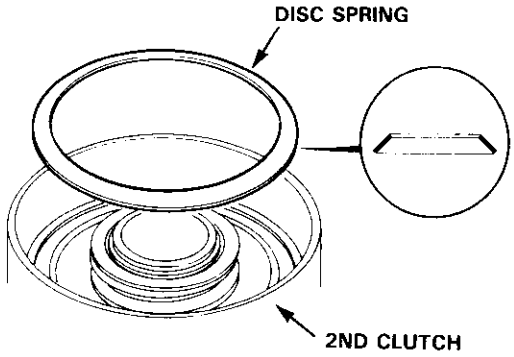

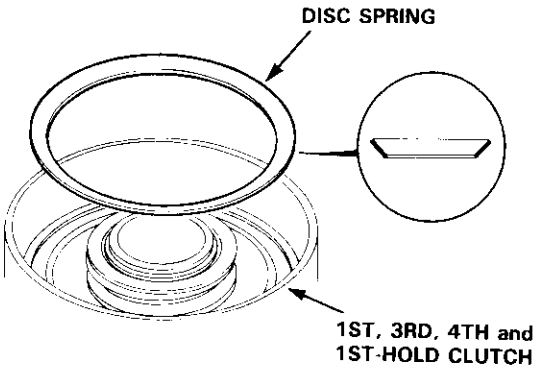

10. Soak the clutch discs thoroughly in ATF for a minimum of 30 minutes.

11. Starting with a clutch plate, alternately install the clutch plates and discs. Install the clutch end plate with flat side toward the disc.

    NOTE: Before installing the plates and discs, make sure the inside of the clutch drum is free of dirt or other foreign matter.

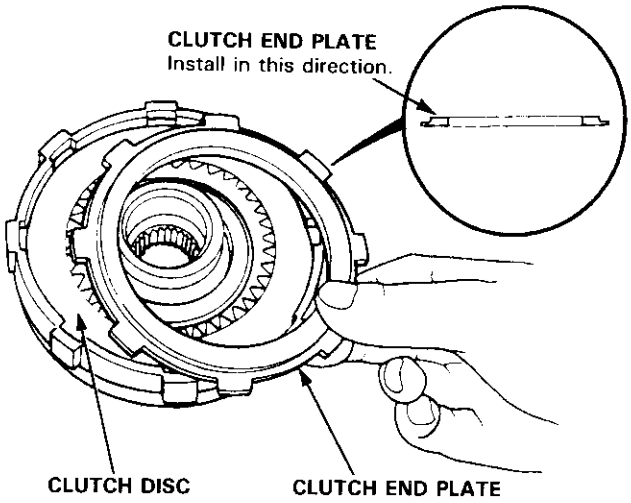

12. Install the snap ring.

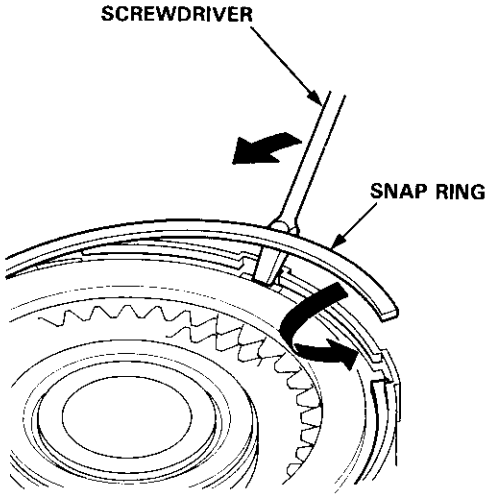

13. Measure the clearance between the clutch end plate and top disc with a dial indicator. Zero the dial indicator with the clutch end plate lowered and lift it up to the snap ring. The distance that the clutch end plate moves is the clearance between the clutch end plate and top disc.

NOTE: Measure at three locations.

Clutch End Plate-to-Top Disc Clearance:

Clutch	Service Limit
1st	0.65–0.85 mm (0.026–0.033 in)
2nd	0.65–0.85 mm (0.026–0.033 in)
3rd	0.40–0.60 mm (0.016–0.024 in)
4th	0.40–0.60 mm (0.016–0.024 in)
1st-hold	0.50–0.80 mm (0.020–0.031 in)

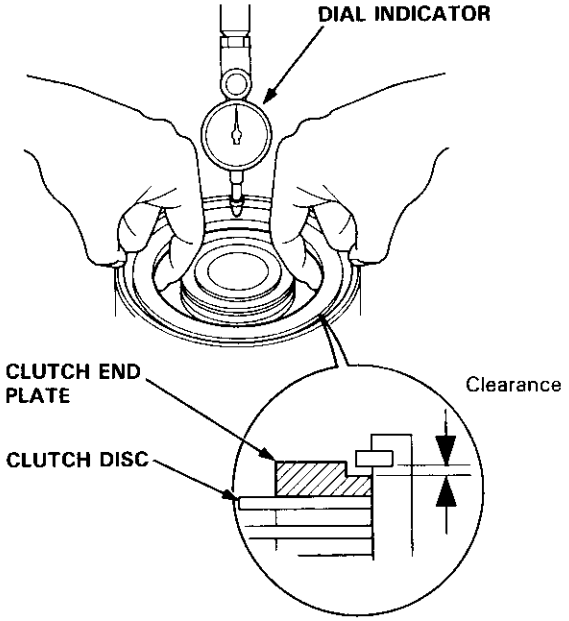

14. If the clearance is not within the service limits, select a new clutch end plate from the following table.

NOTE: If the thickest clutch end plate is installed, but the clearance is still over the standard, replace the clutch discs and clutch plates.

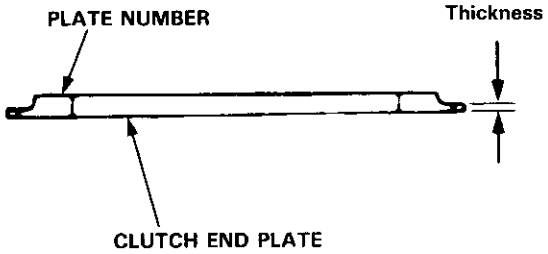

1ST CLUTCH END PLATE

Plate No.	Part Number	Thickness
1	22551–PF4–000	2.1 mm (0.083 in)
2	22552–PF4–000	2.2 mm (0.087 in)
3	22553–PF4–000	2.3 mm (0.091 in)
4	22554–PF4–000	2.4 mm (0.094 in)
5	22555–PF4–000	2.5 mm (0.098 in)
6	22556–PF4–000	2.6 mm (0.102 in)
7	22557–PF4–000	2.7 mm (0.106 in)
8	22558–PF4–000	2.8 mm (0.110 in)
9	22559–PF4–000	2.9 mm (0.114 in)
10	22560–PF4–000	3.0 mm (0.118 in)
11	22561–PF4–000	3.1 mm (0.122 in)
12	22562–PF4–000	3.2 mm (0.126 in)
13	22563–PF4–000	3.3 mm (0.130 in)
14	22564–PF4–000	3.4 mm (0.134 in)

2ND, 3RD and 4TH CLUTCH END PLATE

Plate No.	Part Number	Thickness
1	22551–P56–N00	2.1 mm (0.083 in)
2	22552–P56–N00	2.2 mm (0.087 in)
3	22553–P56–N00	2.3 mm (0.091 in)
4	22554–P56–N00	2.4 mm (0.094 in)
5	22555–P56–N00	2.5 mm (0.098 in)
6	22556–P56–N00	2.6 mm (0.102 in)
7	22557–P56–N00	2.7 mm (0.106 in)
8	22558–P56–N00	2.8 mm (0.110 in)
9	22559–P56–N00	2.9 mm (0.114 in)
10	22560–P56–N00	3.0 mm (0.118 in)

1ST-HOLD CLUTCH END PLATE

Plate No.	Part Number	Thickness
1	22551–PS5–003	2.10 mm (0.083 in)
2	22552–PS5–003	2.20 mm (0.087 in)
3	22553–PS5–003	2.30 mm (0.091 in)
4	22554–PS5–003	2.40 mm (0.094 in)
5 (No mark)	22555–PS5–003	2.50 mm (0.098 in)
6	22556–PS5–003	2.60 mm (0.102 in)
7	22557–PS5–003	2.70 mm (0.106 in)

Torque Converter Housing Bearings

Mainshaft Bearing/Oil Seal Replacement

1. Drive out or pull up the mainshaft bearing and oil seal, using the special tools as shown.

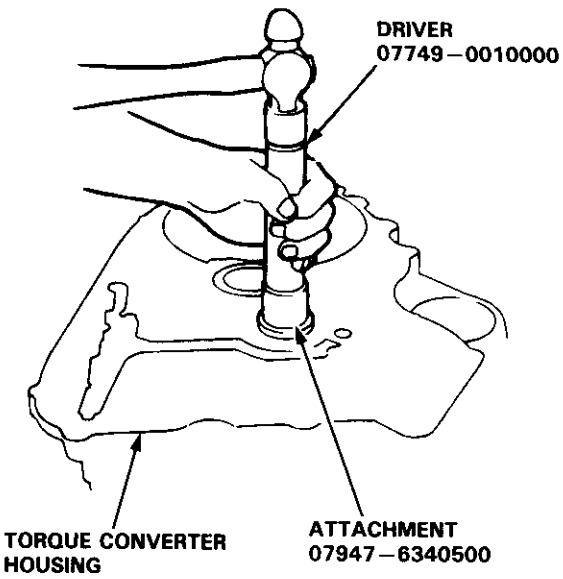

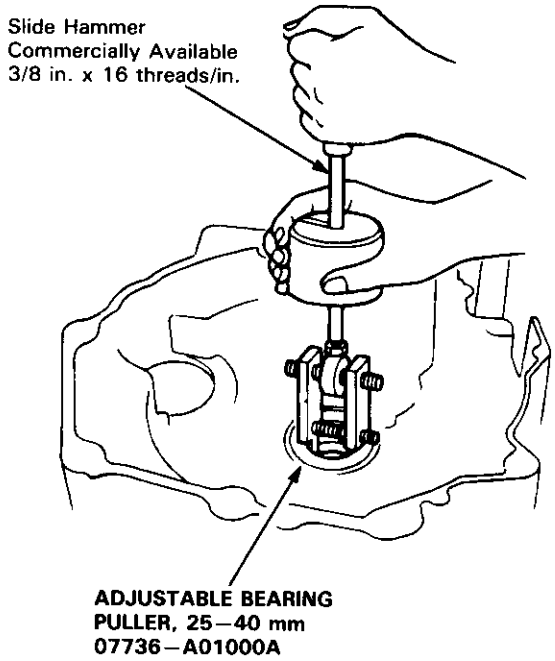

2. Drive in the new mainshaft bearing until it bottoms in the housing, using the special tools as shown.

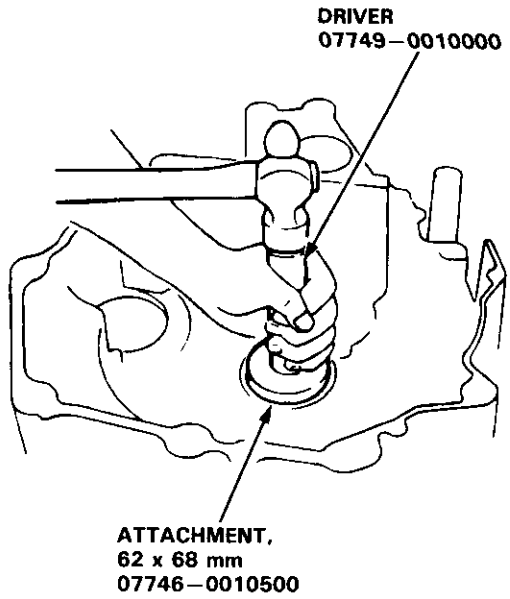

3. Install the new oil seal flush with the housing using the special tools as shown.

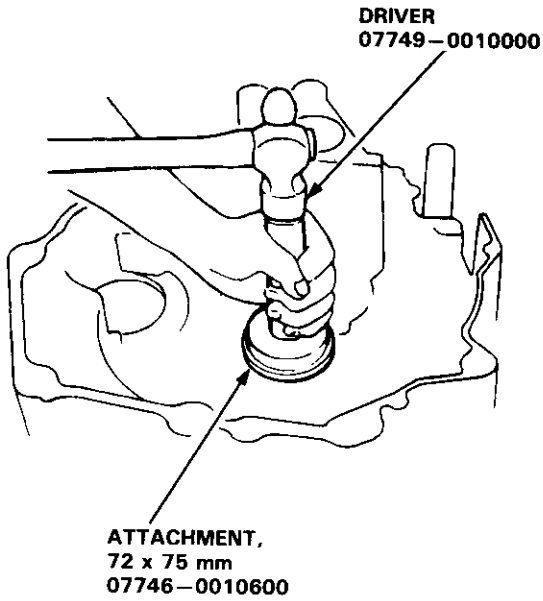

Countershaft Bearing Replacement

1. Remove the countershaft bearing using the special tools as shown.

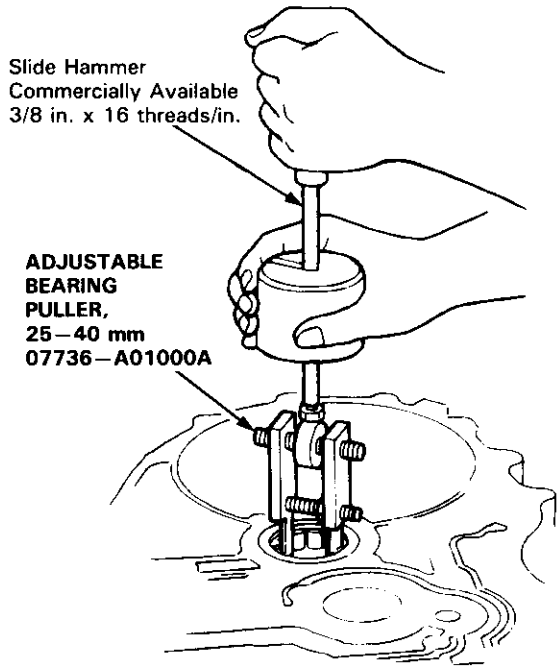

2. Install the oil guide plate.

3. Drive the new bearing into the housing using the special tools as shown.

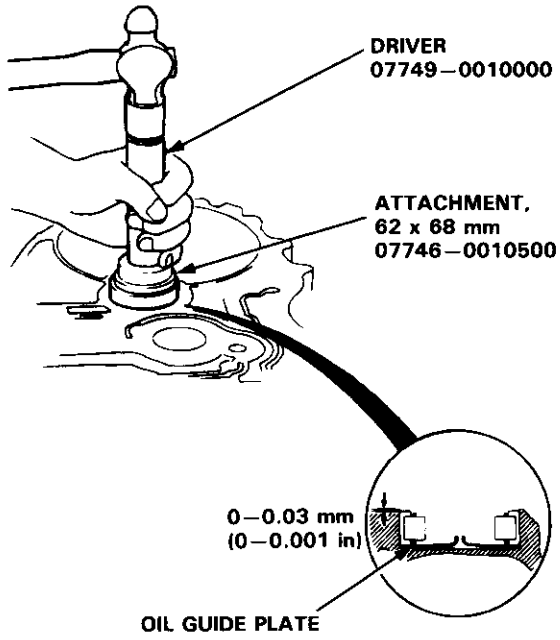

Transmission Housing Bearings

Mainshaft/Countershaft Bearing Replacement

1. To remove the mainshaft and countershaft bearings from the transmission housing, expand each snap ring with snap ring pliers, then push the bearing out using the special tools and a press as shown.

   NOTE: Do not remove the snap rings unless it's necessary to clean the grooves in the housing.

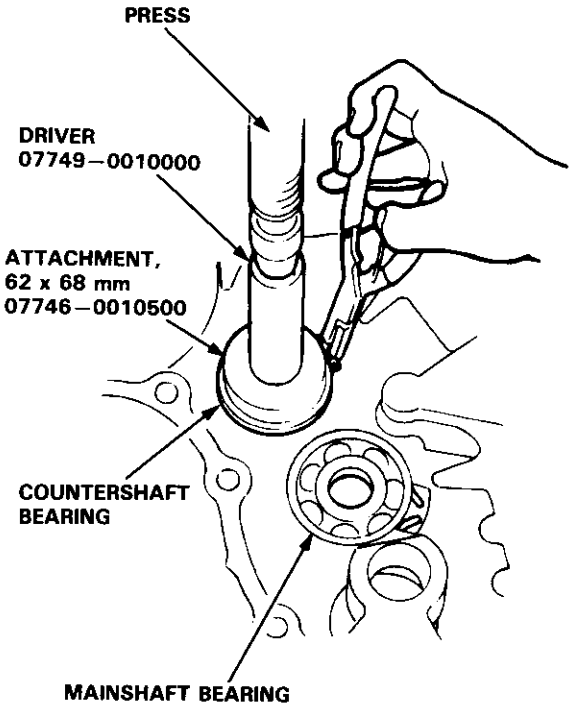

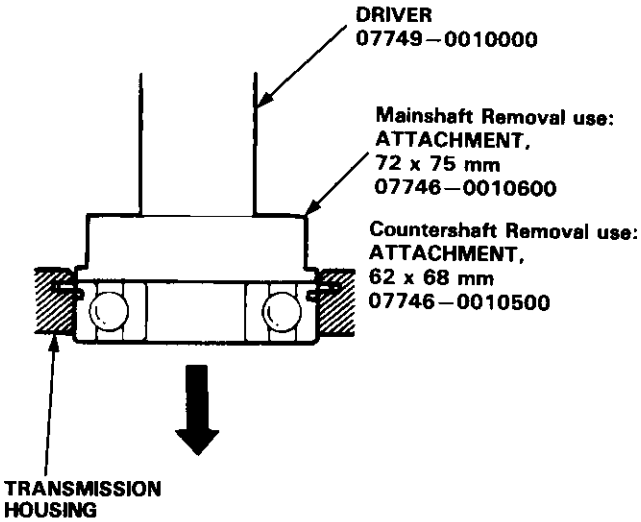

2. Expand each snap ring with snap ring pliers, insert the new bearing part-way into the housing using the special tools and a press as shown. Install the bearing with the groove facing outside the housing.

   NOTE: Coat all parts with ATF.

3. Release the pliers, then push the bearing down into the housing until the ring snaps in place around it.

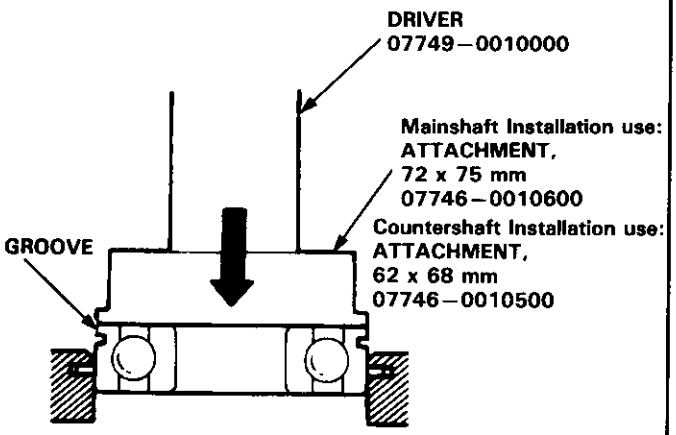

4. After installing the bearing verify the following:

   - The snap ring is seated in the bearing and housing grooves.
   - The snap ring operates properly.
   - The ring end gap is correct.

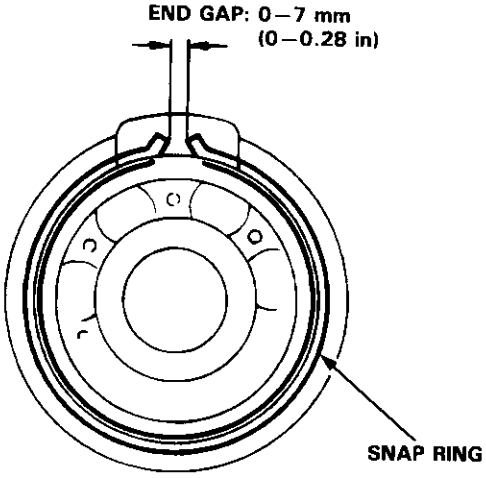

Sub-shaft Bearing Replacement

1. To remove the sub-shaft bearing from the transmission housing, expand the snap ring with snap ring pliers, then push the bearing out using the special tools and a press as shown.

   NOTE: Do not remove the snap ring unless it's necessary to clean the groove in the housing.

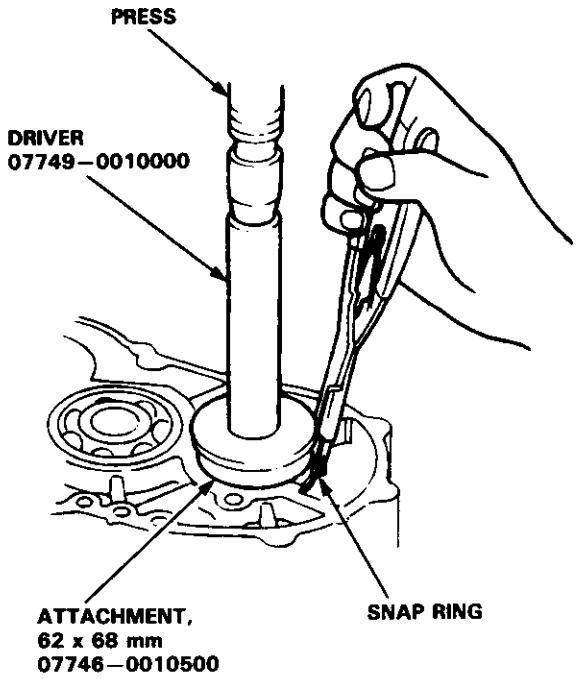

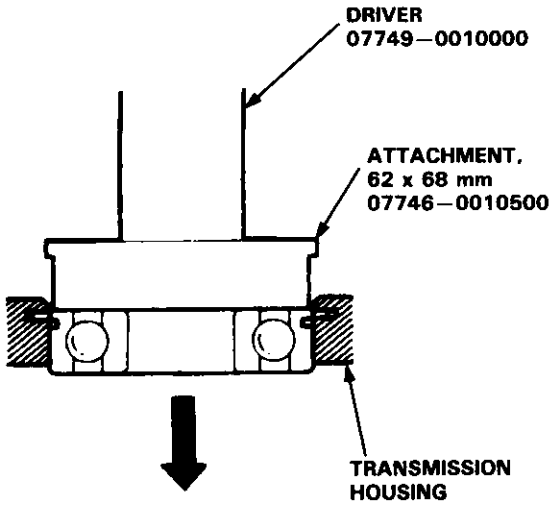

2. Expand the snap ring with snap ring pliers, insert the new bearing part-way into the housing using the special tools and a press as shown. Install the bearing with the groove facing outside the housing.

   NOTE: Coat all parts with ATF.

3. Release the pliers, then push the bearing down into the housing until the ring snaps in place around it, using the special tools as shown.

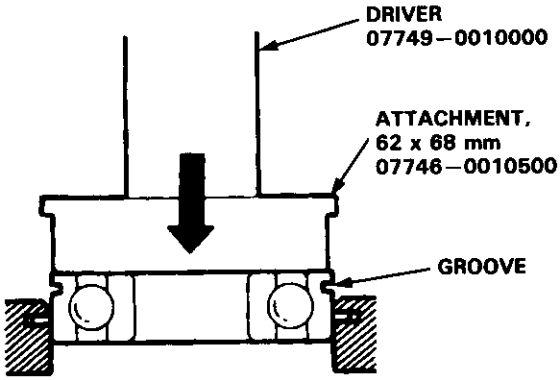

4. After installing the bearing verify the following:

   - The snap ring is seated in the bearing and housing grooves.
   - The snap ring operates properly.
   - The ring end gap is correct.

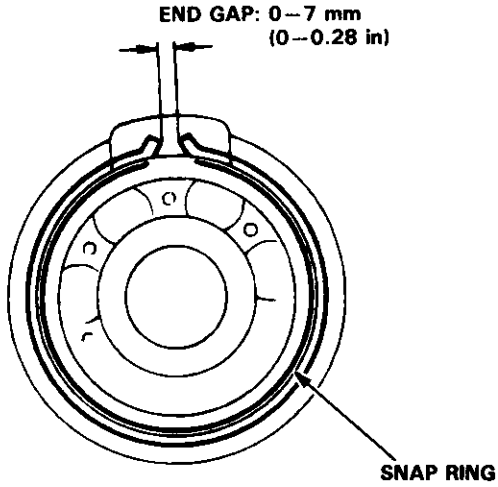

Reverse Idler Gear

Installation

1. Install the reverse idler gear.

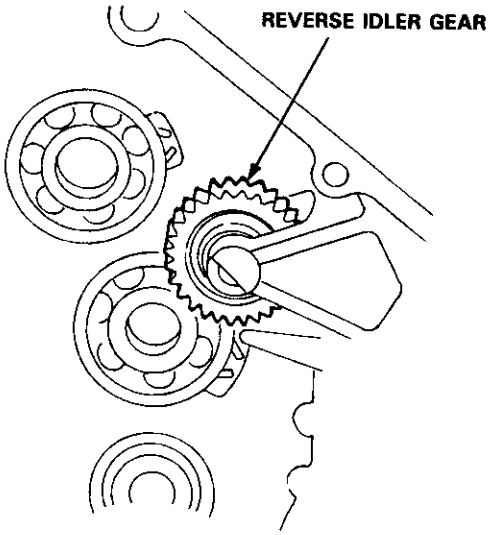

2. Install the reverse idler gear shaft holder and needle bearing into the transmission housing, then tighten the bolts.

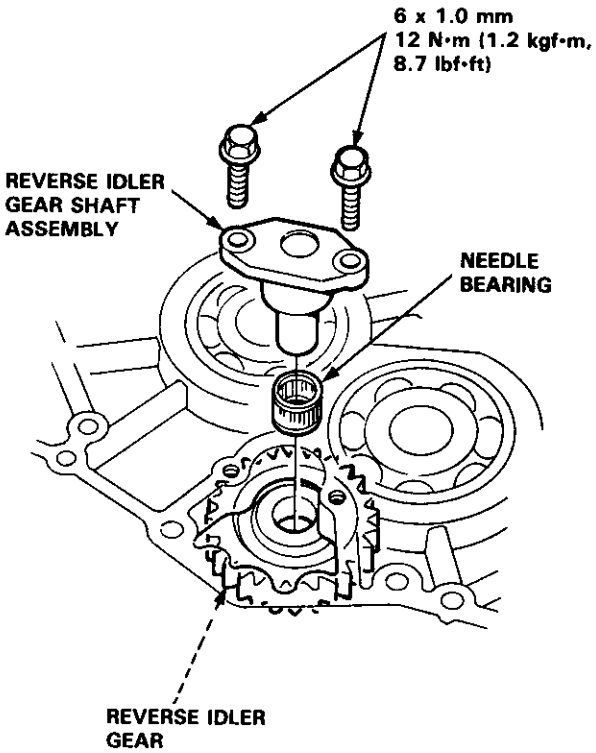

Parking Brake Stopper

Inspection/Adjustment

1. Set the parking brake lever in the [P] position.
2. Measure the distance between the parking brake pawl shaft and the parking brake lever roller pin as shown.

STANDARD: 72.9–73.9 mm (2.87–2.91 in)

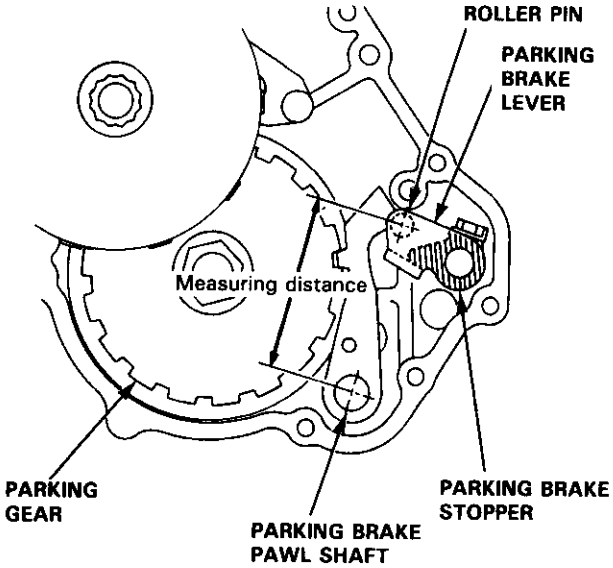

3. If the measurement is out of tolerance, select and install the appropriate parking brake stopper from the table below.

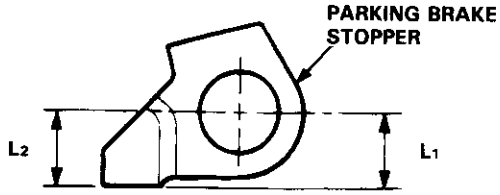

PARKING BRAKE STOPPER

Mark	Part Number	L_1	L_2
1	24537–PA9–003	11.00 mm (0.433 in)	11.00 mm (0.433 in)
2	24538–PA9–003	10.80 mm (0.425 in)	10.65 mm (0.419 in)
3	24539–PA9–003	10.60 mm (0.417 in)	10.30 mm (0.406 in)

4. After replacing the parking brake stopper, make sure the distance is within tolerance.

Reassembly

NOTE:
- Coat all parts with ATF.
- Replace the parts below:
  - O-rings
  - Lock washers
  - Gaskets
  - Locknuts
  - Conical spring washers
  - Sealing washers

TORQUE: 12 N·m (1.2 kgf·m, 8.7 lbf·ft)

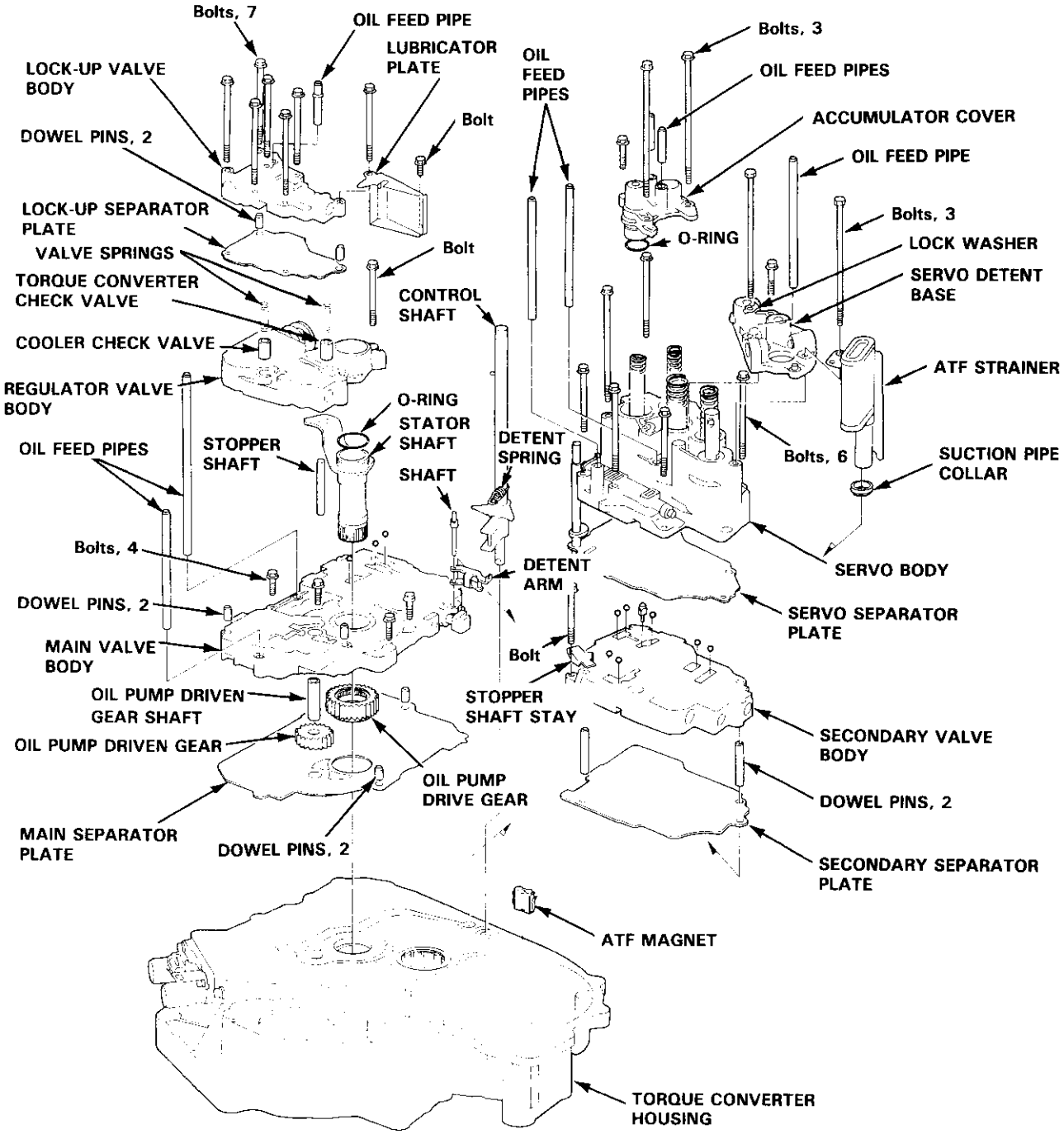

1. Install the ATF magnet and suction pipe collar in the torque converter housing.

2. Install the main separator plate with two dowel pins on the torque converter housing. Then install the oil pump drive gear, driven gear and driven gear shaft.

   NOTE: Install the oil pump driven gear with its grooved and chamfered side facing down.

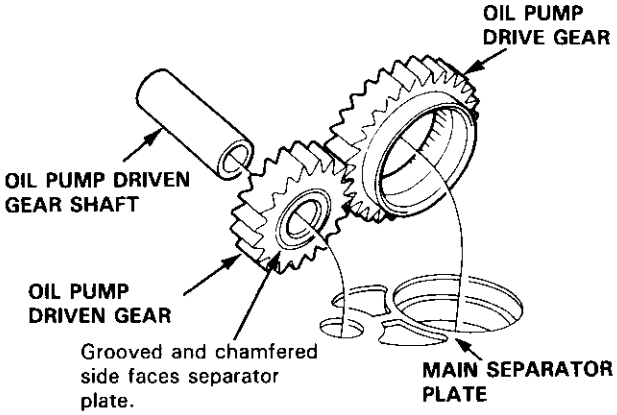

3. Loosely install the main valve body with four bolts. Make sure the oil pump drive gear rotates smoothly in the normal operating direction and the oil pump driven gear shaft moves smoothly in the axial and normal operating directions.

4. Install the secondary valve body, separator plate and two dowel pins on the main valve body.

5. Install the control shaft in the housing, with the control shaft and manual valve together.

6. Install the detent arm and arm shaft in the main valve body, then hook the detent spring to the detent arm.

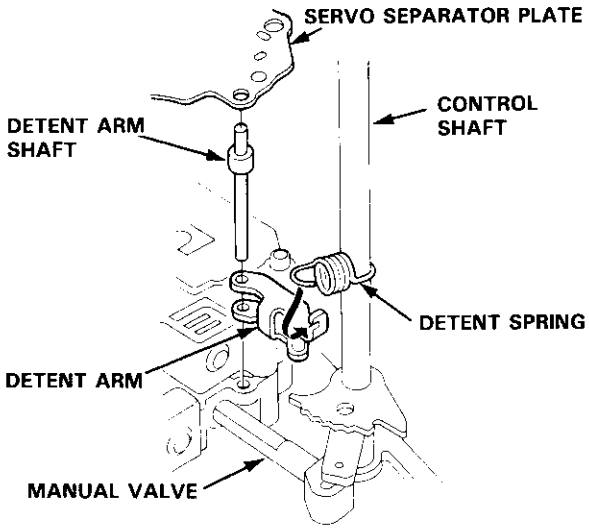

7. Install the servo body and separator plate with six bolts.

8. Install the accumulator cover with three bolts.

9. Install the servo detent base and ATF strainer with three bolts and new lock washers.

10. Tighten the four bolts to 12 N•m (1.2 kgf•m, 8.7 lbf•ft) on the main valve body.
    Make sure the oil pump drive gear and oil pump driven gear shaft move smoothly same as in the step 3.

11. If the oil pump drive gear and oil pump driven gear shaft do not move freely, loosen the four bolts on the main valve body and disassemble the valve bodies.
    Realign the oil pump driven gear shaft and reassemble the valve bodies, then retighten the bolts to the specified torque.

    CAUTION: Failure to align the oil pump driven gear shaft correctly will result in a seized oil pump drive gear or oil pump driven gear shaft.

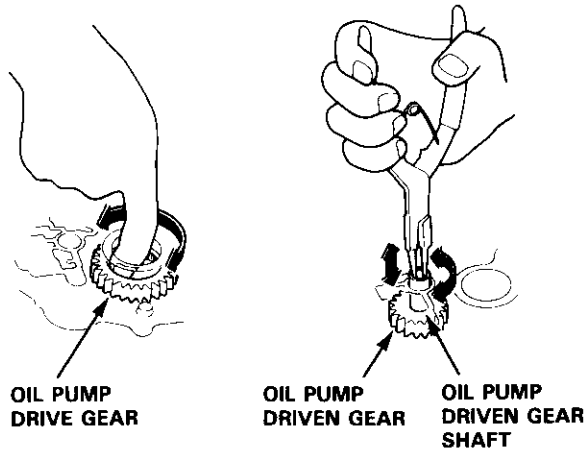

12. Install the stator shaft and stopper shaft.

13. Install the stopper shaft stay on the secondary valve body with the bolt.

14. Install the regulator valve body with the bolt.

15. Install the torque converter check valve, cooler check valve and valve springs in the requlator valve body.

16. Install the lock-up valve body, separator plate, two dowel pins and lubricator plate with the eight bolts.

17. Install the oil feed pipes. (cont'd)

Reassembly (cont'd)

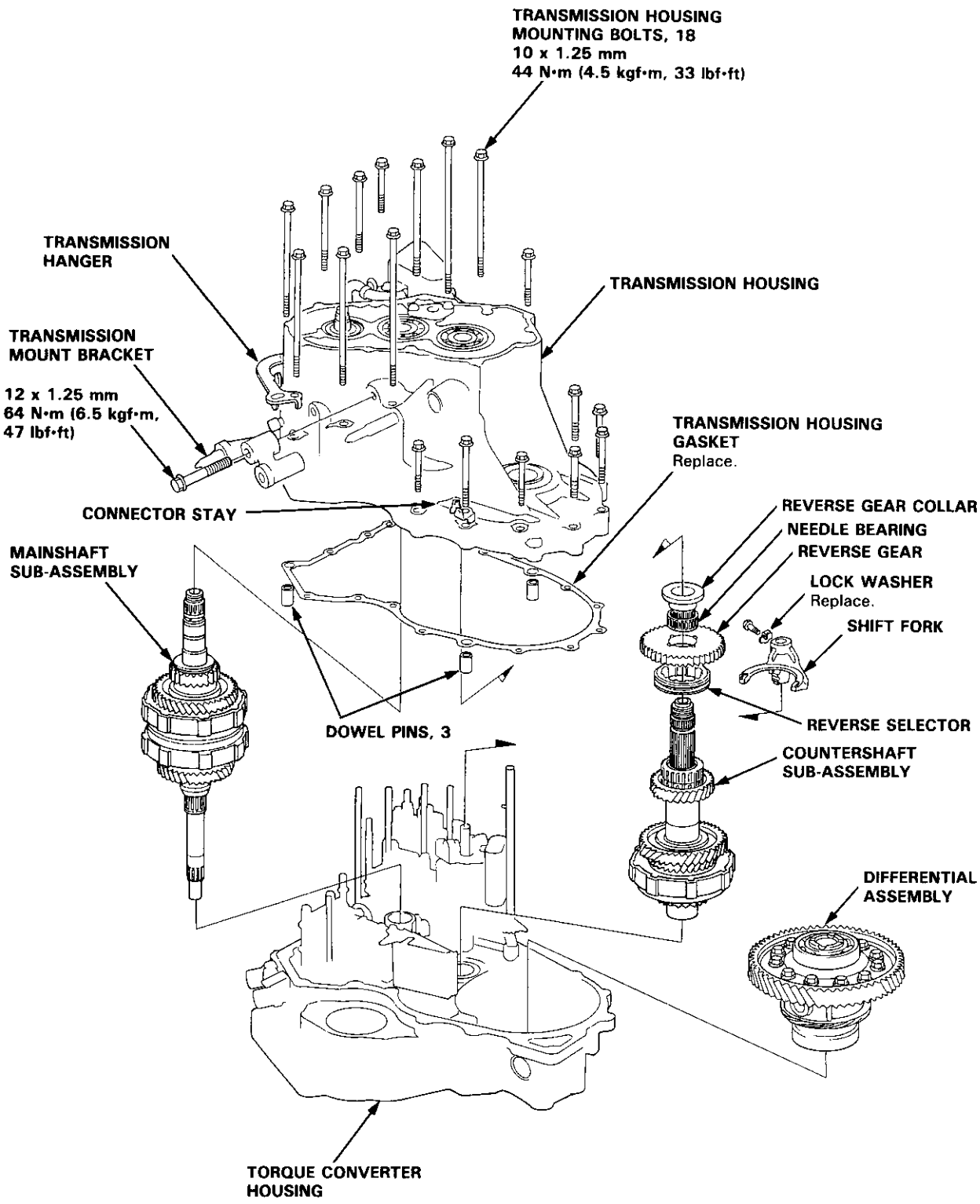

18. Install the sub-shaft assembly in the transmission housing (see page 14-138).

19. Install the reverse idler gear and gear shaft holder (see page 14-154).

20. Install the differential assembly in the torque converter housing.

21. Install the mainshaft and countershaft sub-assembly together in the torque converter housing.

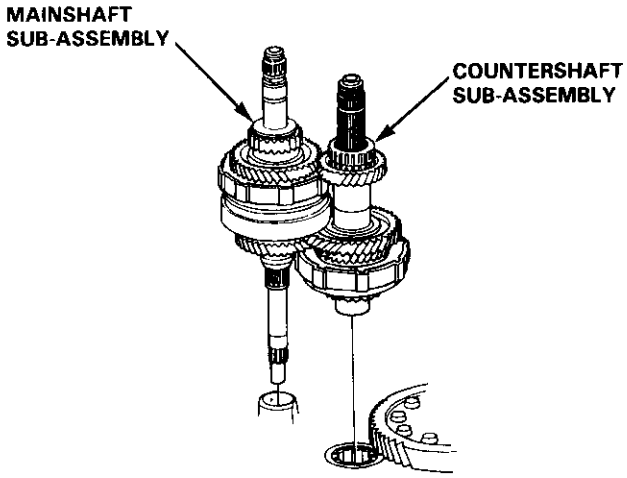

22. Turn the shift fork so the large chamfered hole is facing the fork bolt hole, then install the shift fork with the reverse selector and torque the lock bolt. Bend the lock tab against the bolt head.

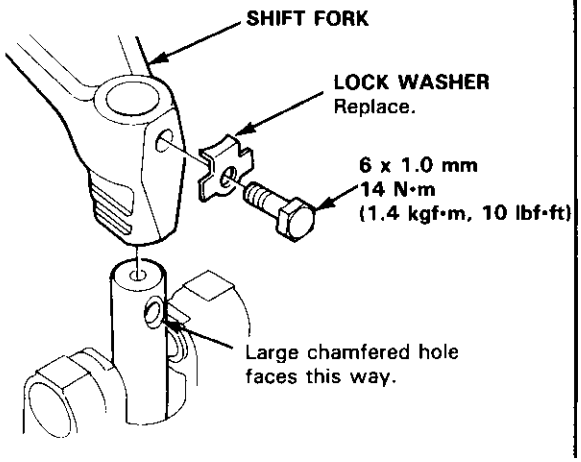

23. Install the reverse gear with the collar and needle bearing on the countershaft.

24. Align the spring pin of the control shaft with the transmission housing groove by turning the control shaft.

25. Place the transmission housing on the torque converter housing with a new gasket and the dowel pins.

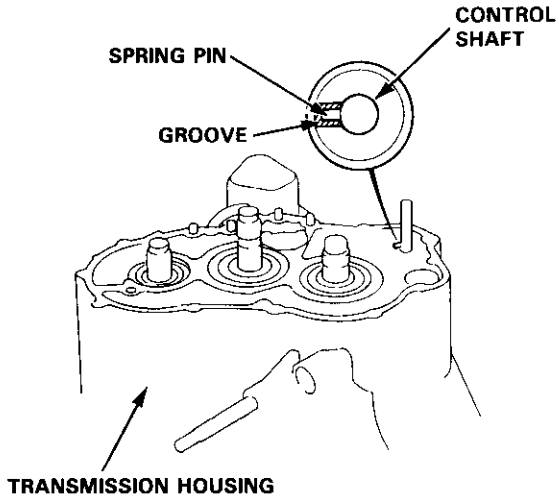

26. Install the transmission housing bolts along with the transmission hanger and the connector stay, then torque the bolts in two or more steps in the sequence shown.

TORQUE: 44 N•m (4.5 kgf•m, 33 lbf•ft)

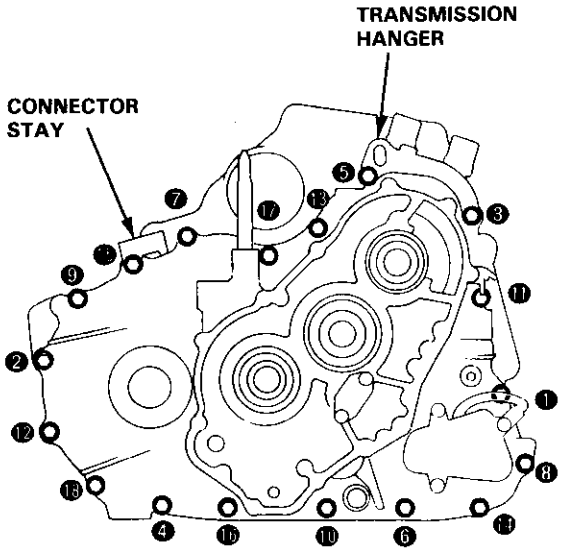

Reassembly (cont'd)

27. Slip the special tool onto the mainshaft as shown.

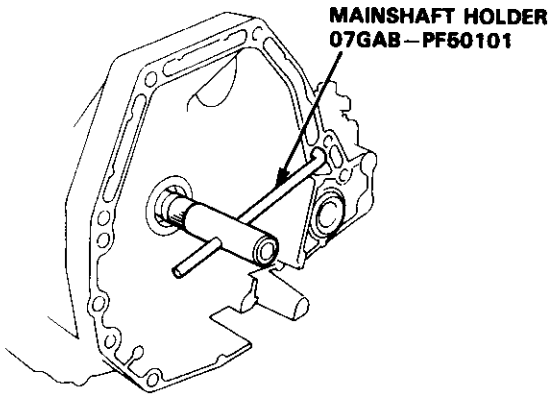

28. Install the parking brake lever on the control shaft.

29. Install the mainshaft 1st gear collar and thrust washer on the mainshaft.

30. Install the countershaft 1st gear collar and needle bearing, then install the countershaft 1st gear/one-way clutch/parking gear assembly on the countershaft.

31. Install the parking brake pawl in the transmission housing, then engage it with the parking gear.

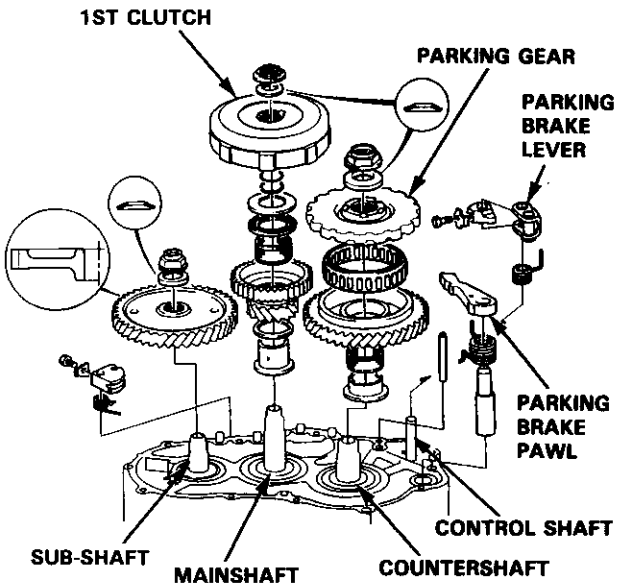

32. Use the old locknut and old conical spring washer to tighten the parking gear to the specified torque, then loosen the locknut.

TORQUE: 103 N·m (10.5 kgf·m, 75.9 lbf·ft)

NOTE: Locknut has left-hand threads.

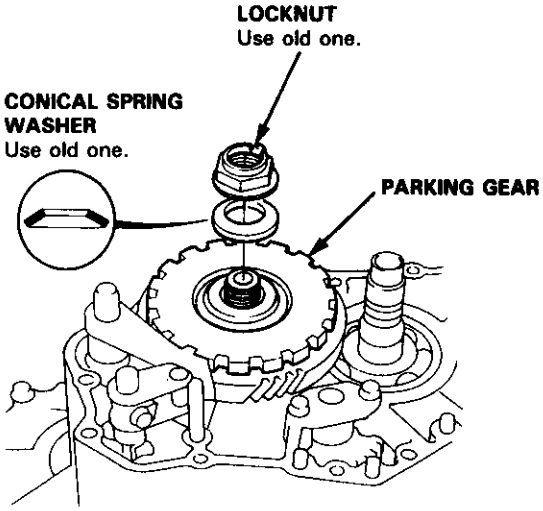

33. Install the sub-shaft 1st gear on the sub-shaft.

34. Install new O-rings on the mainshaft.

NOTE: Wrap the shaft splines with tape to prevent damage to the O-rings.

35. Assemble the thrust washer, thrust needle bearing, needle bearing and mainshaft 1st gear on the 1st clutch assembly, then install them on the mainshaft.

36. Align the hole of the sub-shaft 1st gear with the hole of the transmission housing, then insert a pin to lock the sub-shaft while tightening the sub-shaft locknut.

37. Install new conical spring washers and new locknuts on each shaft.

CAUTION: Install the conical spring washers in the direction shown.

38. Tighten the locknuts to the specified torque.

TORQUE:

MAINSHAFT	**93 N·m (9.5 kgf·m, 69 lbf·ft)**
COUNTERSHAFT	**103 N·m (10.5 kgf·m, 75.9 lbf·ft)**
SUB-SHAFT	**93 N·m (9.5 kgf·m, 69 lbf·ft)**

NOTE: Mainshaft and countershaft locknuts have left-hand threads.

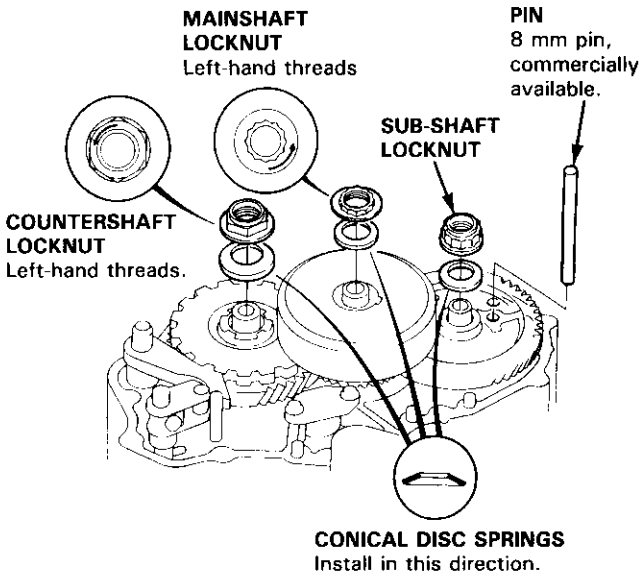

39. Stake each locknut using a 3.5 mm punch.

• **MAINSHAFT**

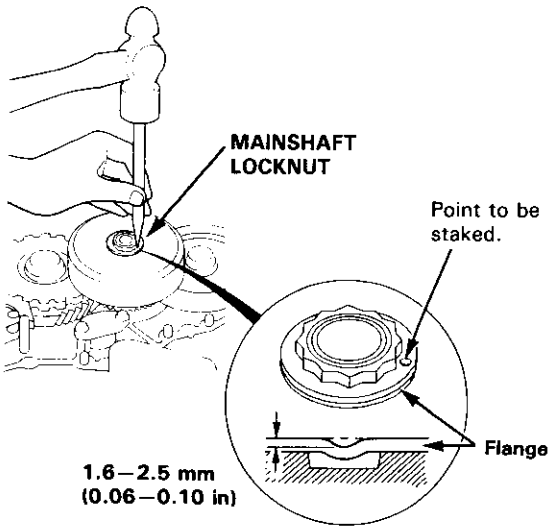

• **COUNTERSHAFT**

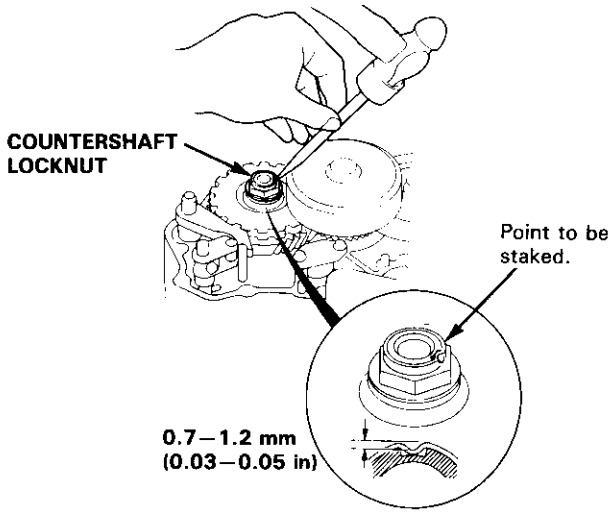

• **SUB-SHAFT**

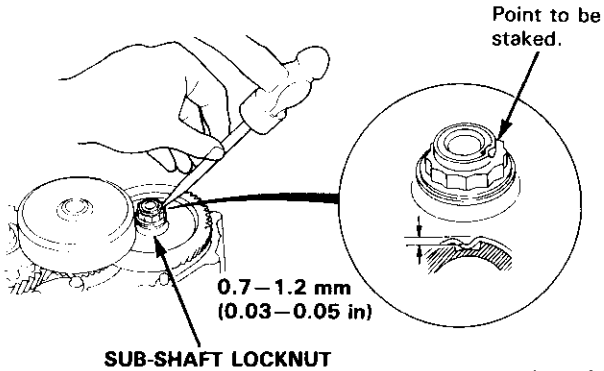

(cont'd)

Reassembly (cont'd)

40. Set the parking brake lever in the [P] position, then verify that the parking brake pawl engages the parking gear.

41. If the pawl does not engage fully, check the parking brake pawl stopper clearance as described on page 14-154.

42. Tighten the lock bolt and bend the lock tab.

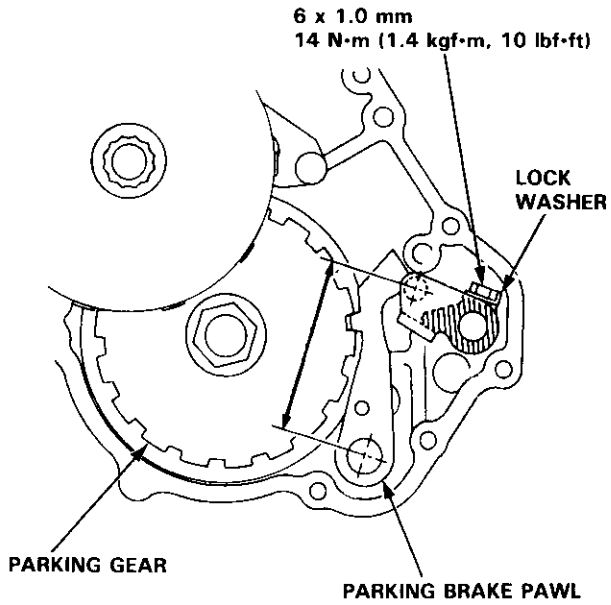

43. Install the right side cover and right side cover protector.

TORQUE: 12 N·m (1.2 kgf·m, 8.7 lbf·ft)

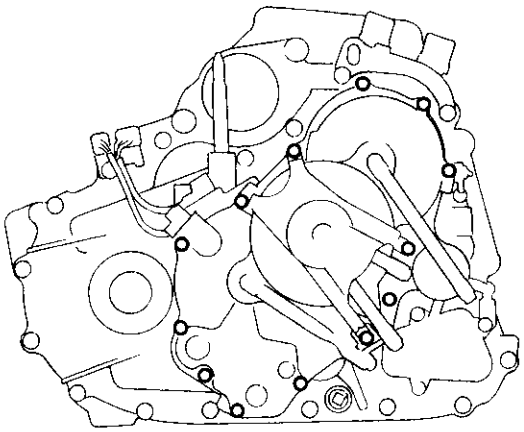

44. Install the throttle control lever with the lever spring on the throttle control shaft.

TORQUE: 7.8 N·m (0.8 kgf·m, 5.8 lbf·ft)

45. Install the tramsmission mount bracket.

TORQUE: 64 N·m (6.5 kgf·m, 47 lbf·ft)

46. Install the ATF cooler pipes and ATF level gauge.

Torque Converter/Drive Plate

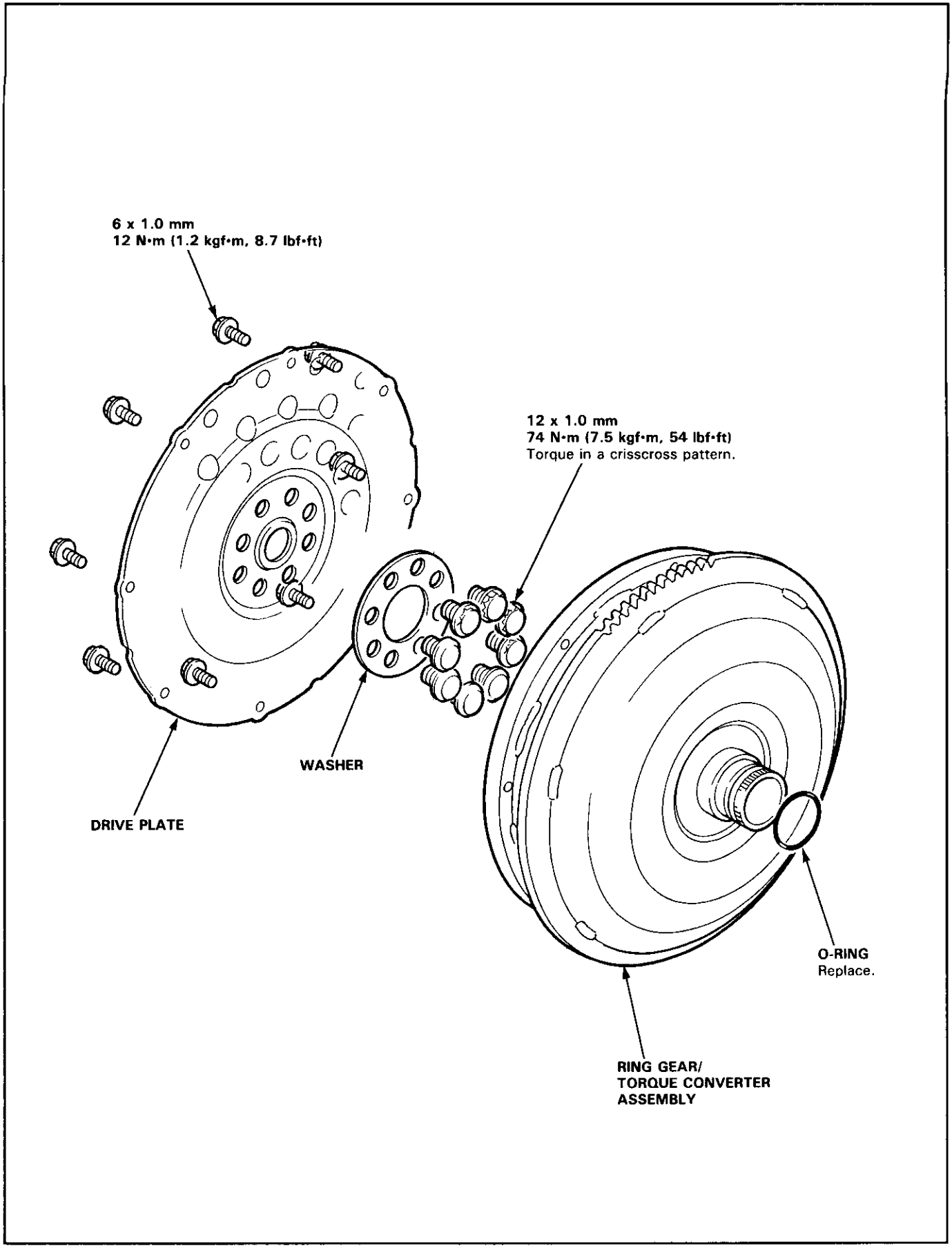

Installation

1. Flush the ATF cooler as described on pages 14-168 thru 169.

2. Install the starter motor on the transmission housing, then install the 14 mm dowel pins in the torque converter housing.

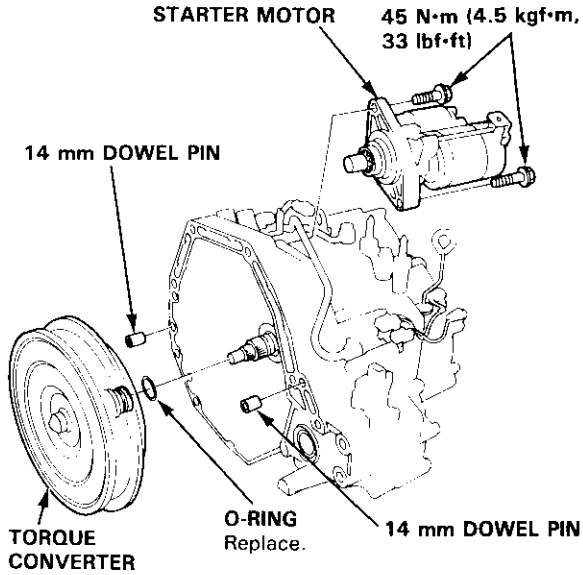

3. Place the transmission on a transmission jack, and raise to the engine level.

4. Attach the transmission to the engine, then install the transmission housing mounting bolts and two rear engine mounting bolts with new washers.

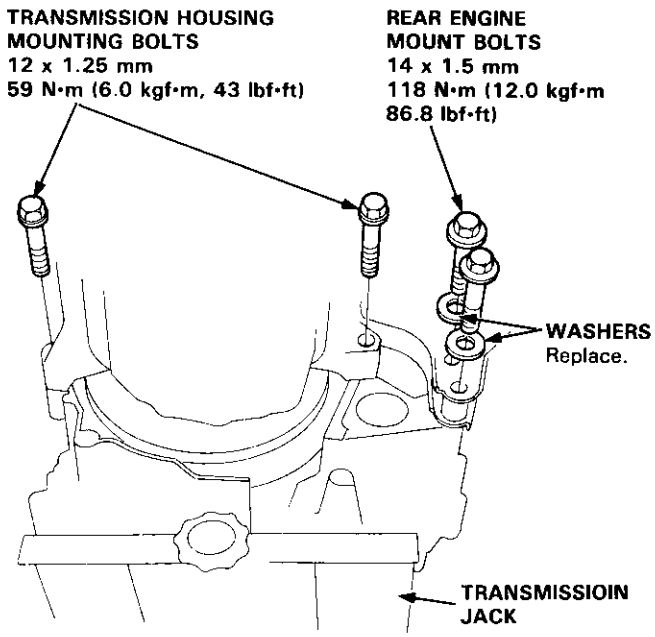

5. Install the transmission mount.

6. Install the transmission housing mounting bolts.

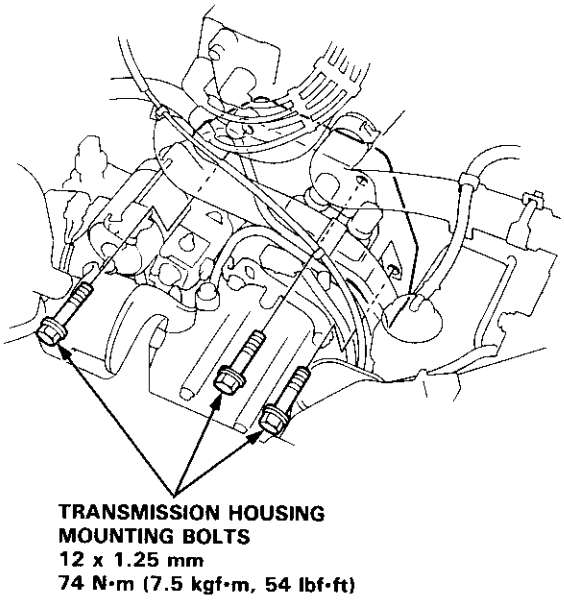

7. Remove the transmission jack.

8. Attach the torque converter to the drive plate with eight bolts and torque:
   Rotate the crankshaft as necessary to tighten the bolts to 1/2 of the specified torque, then to the final torque, in a crisscross pattern.
   After tighten the last bolts, check that the crankshaft rotates freely.

   TORQUE: 12 N·m (1.2 kgf·m, 8.7 lbf·ft)

9. Install the torque converter cover and engine stiffener.

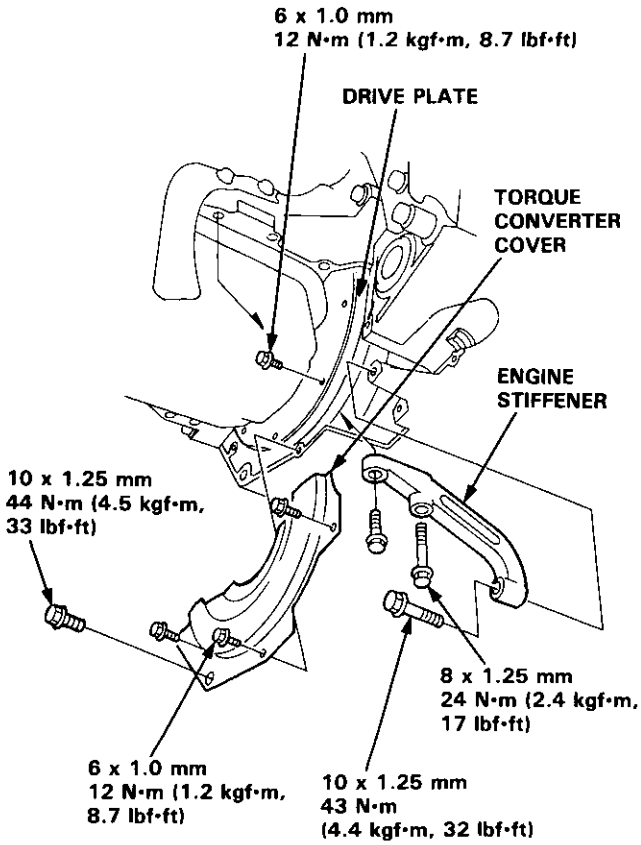

10. Tighten the crankshaft pulley bolt to specified torque.

    TORQUE: 177 N·m (18.0 kgf·m, 130 lbf·ft)

11. Connect the ATF cooler hoses to the joint pipes.

12. Connect the throttle control cable to the throttle control lever and install the right front mount/bracket.

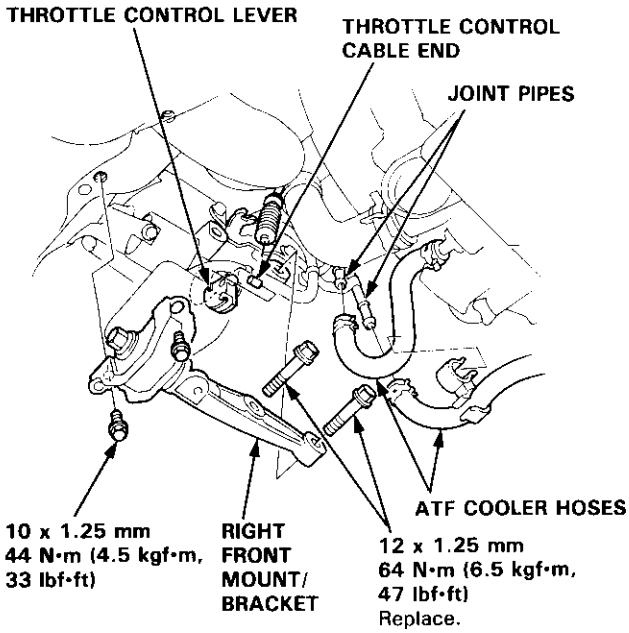

13. Install the control lever with a new lock washer to the control shaft, then install the shift cable cover.

    CAUTION: Take care not to bend the shift cable.

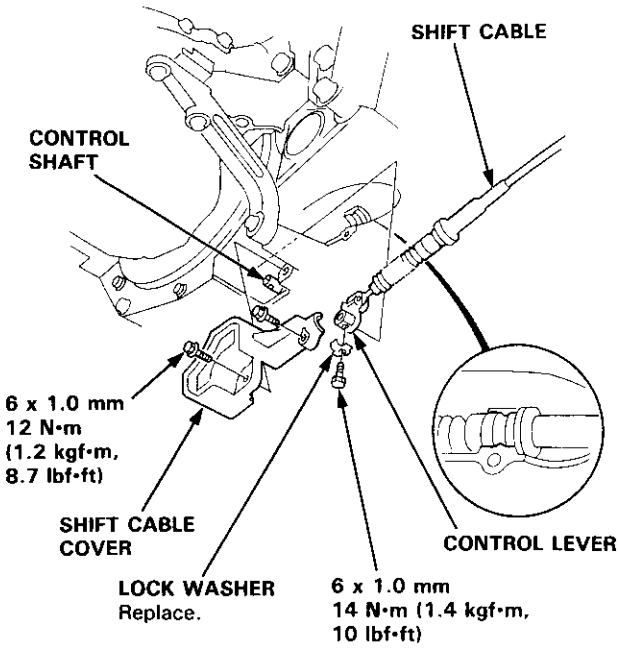

(cont'd)

Installation (cont'd)

14. Install new set rings on the end of the intermediate shaft and the driveshaft.

15. Install the intermediate shaft.

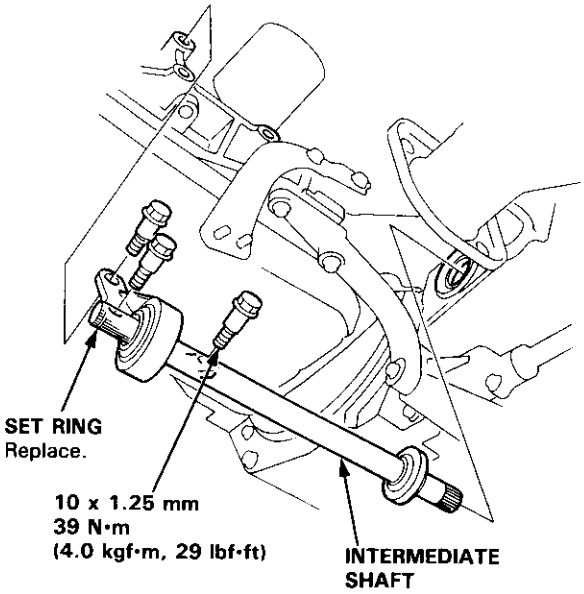

16. Install exhaust pipe A, and connect the heated oxygen sensor (HO2S) connector.

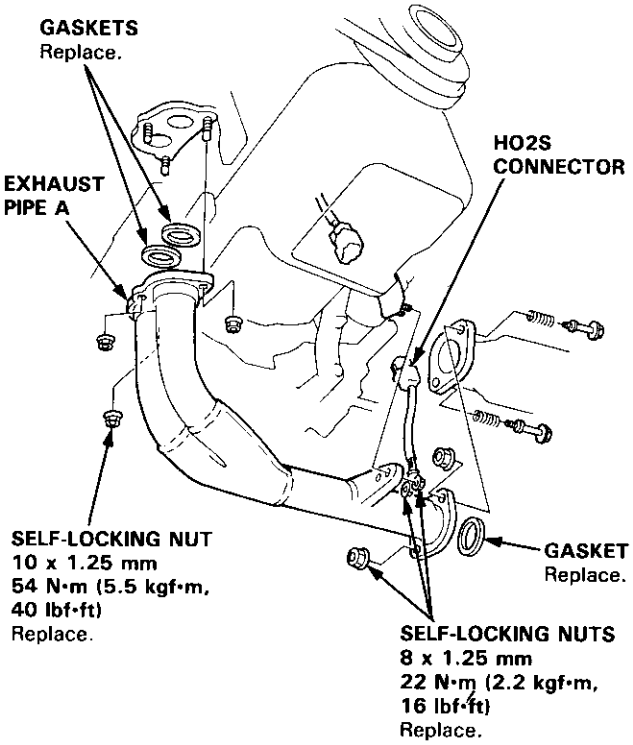

17. Install the right and left drivershafts (see section 16).

NOTE: Turn the right and left steering knuckle fully outward, and slide the right driveshaft into the differential until you feel its spring clip engages the side gear. Slide the left driveshaft into the intermediate shaft until you feel the spring clip of the intermediate shaft engage the driveshaft.

18. Install right damper fork, then install the right and left ball joints to each lower arm with the castle nuts and new cotter pins.

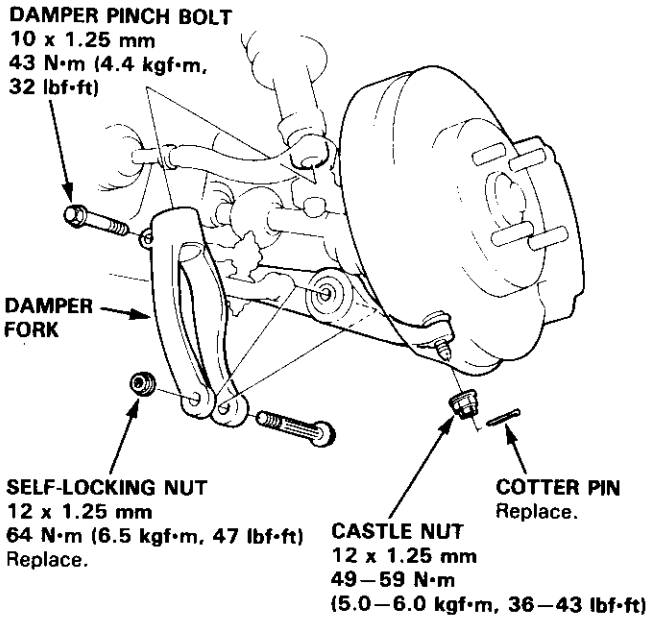

19. Install the splash shield.

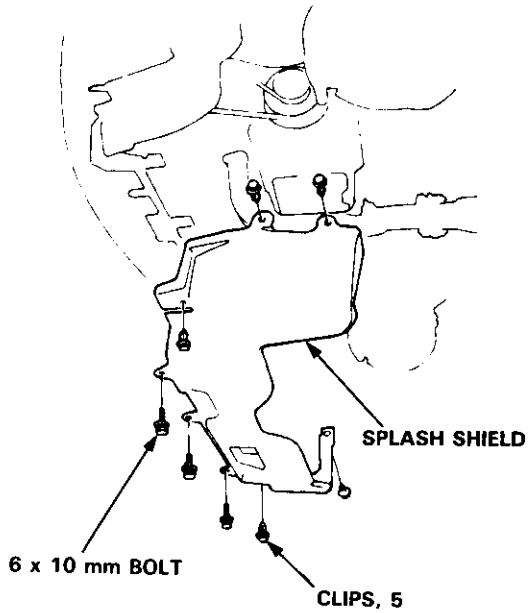

20. Connect the vehicle speed sensor (VSS), mainshaft *speed sensor and countershaft speed sensor con*nectors.

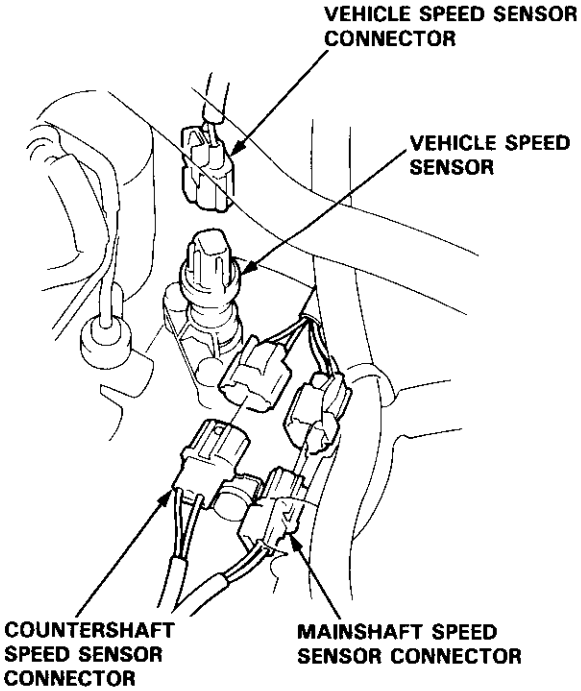

21. Connect the lock-up control solenoid valve connector and shift control solenoid valve connector, then clamp the lock-up control solenoid harness with the harness stay.

22. Connect the transmission ground cable.

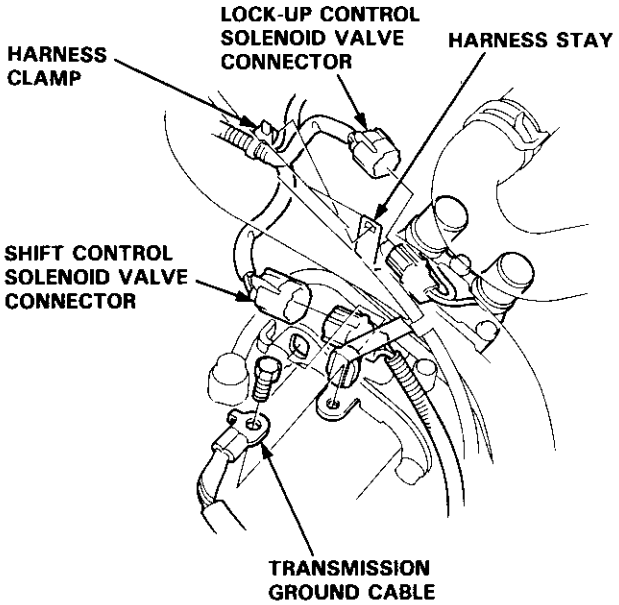

23. Connect the starter cable to the starter motor, and *install the cable holder.*

NOTE: When installing the starter motor cable, make sure that the crimped side of the ring terminal is facing out (see section 23).

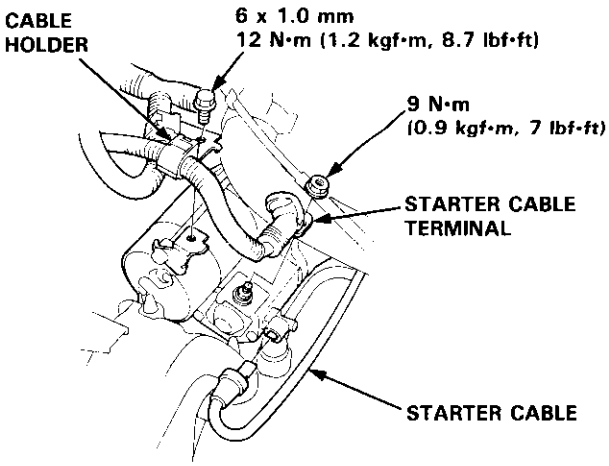

24. Install the air cleaner housing assembly and intake air duct.

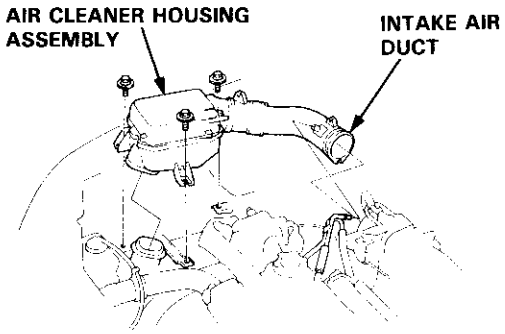

25. Refill the transmission with ATF(see page 14-93).

26. Connect the battery positive (+) and negative (−) cables to the battery.

27. Start the engine. Set the parking brake, and shift the transmission through all gears three times.

28. Check shift cable adjustment as described on page 14-171.

29. Check that front wheel alignment (see section 18).

30. Let the engine reach operating temperature (the cooling fan comes on) with the transmission in [N] or [P] position, then turn it off and check the fluid level.

31. Road test as described on page 14-90 and 91.

Cooler Flushing

⚠ WARNING To prevent injury to face and eyes, always wear safety glasses or a face shield when using the transmission flusher.

NOTE: This procedure should be performed before reinstalling the transmission.

1. Check tool and hoses for wear or cracks before using.
   If wear or cracks are found, replace the hoses before using.

2. Using the measuring cup, fill the tank with 21 ounces (approximately 2/3 full) of biodegradable flushing fluid (J35944-20). Do not substitute with any other fluid.
   Follow the handling procedure on the fluid container.

3. Secure the flusher filler cap and pressurize the tank with compressed air to between 550–829 kPa (5.6–8.45 kgf/cm², 80–120 psi).

   NOTE: The air line should be equipped with a water trap to ensure a dry air system.

4. Hang the tool under the vehicle.

5. Attach the discharge hose of the tank to the return line of the transmission cooler using a clamp.

6. Connect the drain hose to the inlet line of the transmission cooler using a clamp. Securely clamp the opposite end of the drain hose to a bucket or floor drain.

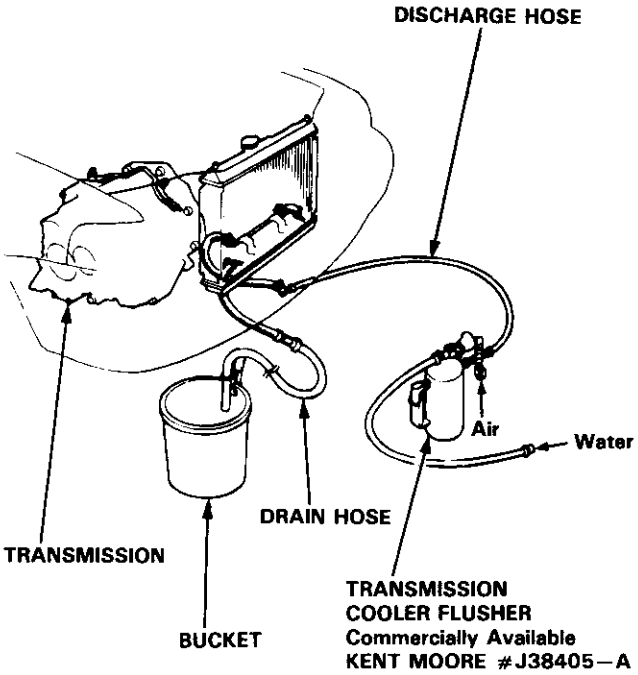

7. With the water and air valves off, attach the water and air supplies to the flusher. (Hot water if available.)

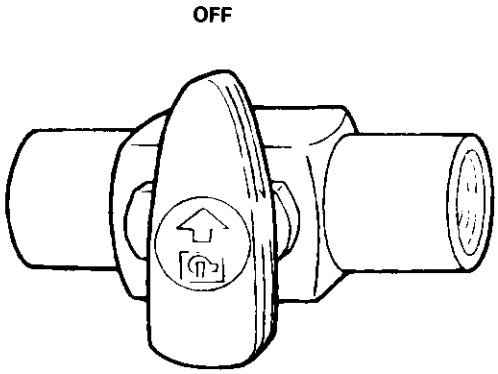

8. Turn on the flusher water valve so water will flow through the oil cooler for 10 seconds. If water does not flow through the oil cooler it is completely plugged, cannot be flushed, and must be replaced.

9. Depress the trigger to mix the flushing fluid into the water flow. Use the wire clip to hold the trigger down.

10. While flushing with the water and flushing fluid for 2 minutes, turn the air valve on for 5 seconds every 15–20 seconds to create a surging action.
    AIR PRESSURE:
    MAX 829 kPa (8.45 kgf/cm², 120 psi)

11. Turn the water valve off. Release the trigger, then reverse the hoses to the cooler so you can flush in the opposite direction. Repeat steps 8 through 10.

12. Release the trigger and allow water only to rinse the cooler with water for one minute.

13. Turn the water valve off and turn off the water supply.

14. Turn the air valve on to dry the system out with air for two full minutes or until no moisture is visible leaving the drain hose.

    CAUTION: Residual moisture in the oil cooler or pipes can damage the transmission.

15. Remove the flusher from the cooler line. Attach the drain hose to a oil container.

16. Install the transmission and leave the drain hose attached to the cooler line.

17. Make sure the transmission is in [P] position. Then fill the transmission with ATF and run the engine for 30 seconds or until approximately one quart is discharged.

18. Remove the drain hose and reconnect the cooler return hose to the transmission.

19. Refill the transmission with ATF to the proper level.

TOOL MAINTENANCE

1. Empty and rinse after each use. Fill the can with water and pressurize the can. Flush the discharge line to ensure that the unit is clean.

2. If discharge liquid does not foam, the orifice may be blocked.

3. To clean, disconnect the plumbing from the tank at the large coupling nut.

4. Remove the in-line filter from the discharge side and clean if necessary.

5. The fluid orifice is located behind the filter. Clean it with the pick stored in the bottom of the tank handle or blow it clean with air. Securely reassemble all parts.

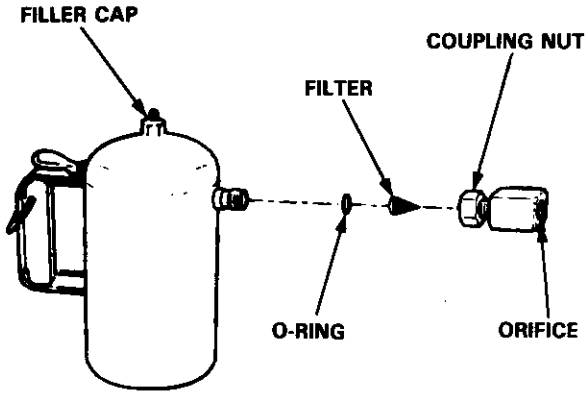

Shift Cable

Removal/Installation

CAUTION:
- **All SRS electrical wiring harnesses are covered with yellow insulation.**
- **Before disconnecting any part of the SRS wire harness, connect the short connectors (see page 23-70).**
- **Replace the entire affected SRS harness assembly if it has an open circuit or damaged wiring.**

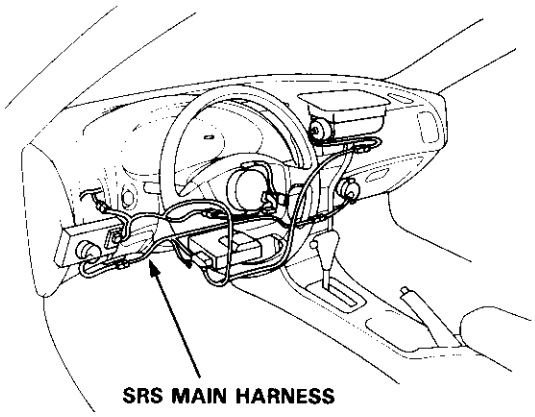

⚠ WARNING Make sure lifts are placed properly (see section 1).

1. Remove the center console (see section 20).
2. Shift to [N] position, then remove the lock pin from the cable adjuster.

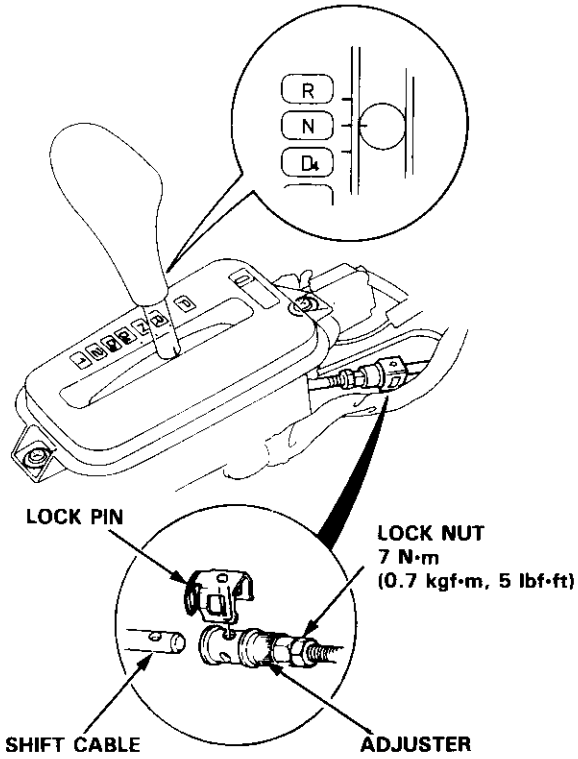

3. Remove the shift cable bracket.

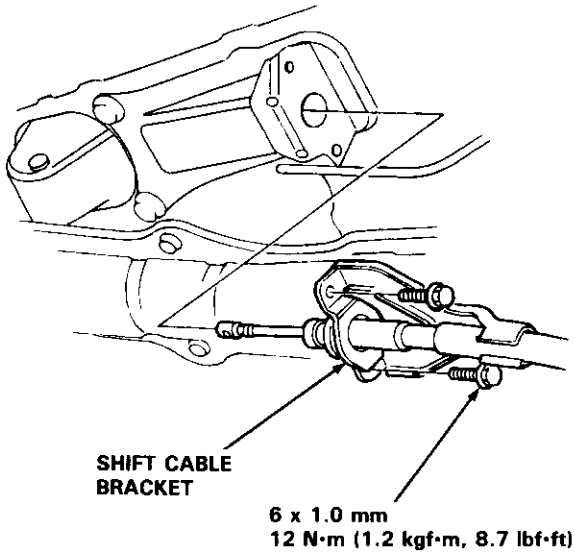

4. Remove the shift cable holder.
5. Remove the shift cable cover.
6. Remove the control lever from the control shaft, then remove the shift cable. Take care not to bend the cable when removing/installing it.

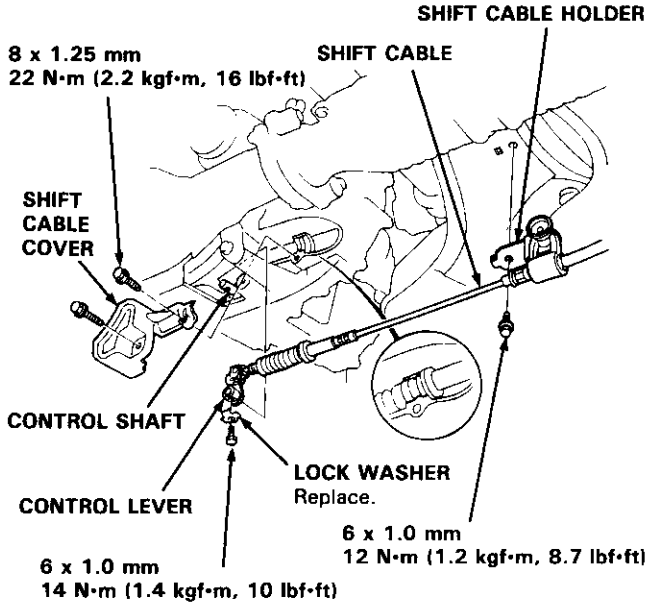

7. Install the shift cable in the reverse order of removal.
8. Check the cable adjustment on reassembly, on page 14-171.

Adjustment

CAUTION:

- **All SRS electrical wiring harnesses are covered with yellow insulation.**
- **Before disconnecting any part of the SRS wire harness, connect the short connectors (see page 23-70).**
- **Replace the entire affected SRS harness assembly if it has an open circuit or damaged wiring.**

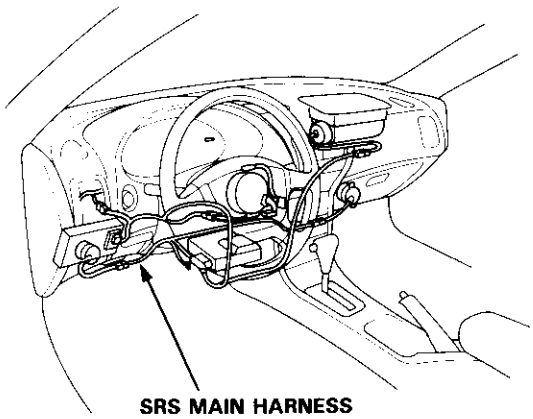

⚠ WARNING Make sure lifts are placed properly (see section 1).

1. Start the engine. Shift to [P] position to see if the reverse gear engages. If so, refer to troubleshooting on page 14-86 thru 89.

2. With the engine off, remove the center console (see section 20).

3. Shift to [N] position, then remove the lock pin from the cable adjuster.

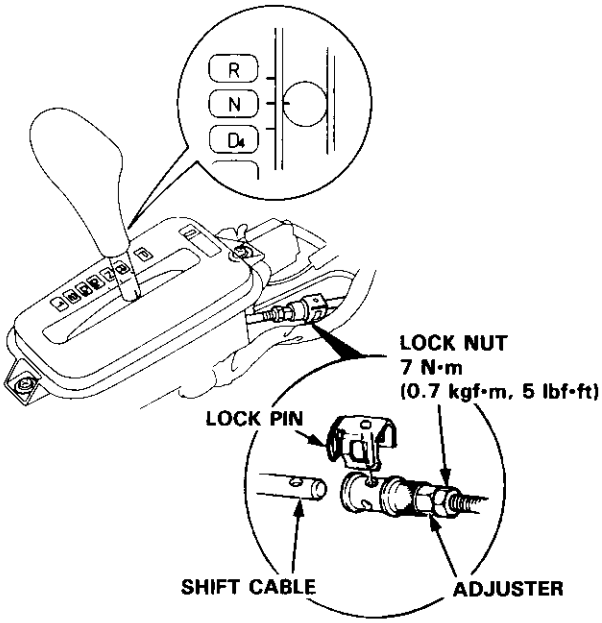

4. Check that the hole in the adjuster in perfectly aligned with the hole in the shift cable. There are two holes in the end of the shift cable. They are positioned 90° apart to allow cable adjustment in 1/4 turn increments.

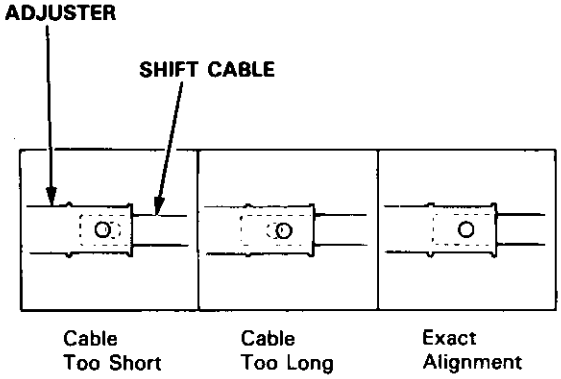

5. If not perfectly aligned, loosen the locknut on the shift cable and adjust as required.

6. Tighten the locknut to 7 N•m (0.7 kgf•m, 5 lbf•ft).

7. Install the lock pin on the adjuster. If you feel the lock pin binding as you reinstall it, the cable is still out of adjustment and must be readjusted.

8. Move the selector to each gear and verify that the automatic transaxle gear position indicator follows the automatic transaxle gear position switch.

9. Start the engine and check the shift lever in all gears. If any gear does not work properly, refer to troubleshooting on page 14-86 thru 89.

10. Insert the ignition key into the key cylinder on the shift indicator panel, verify that the shift lock lever is released.

Gearshift Selector

Disassembly/Reassembly

CAUTION:

- **All SRS electrical wiring harnesses are covered with yellow insulation.**
- **Before disconnecting any part of the SRS wire harness, connect the short connectors (see page 23-70).**
- **Replace the entire affected SRS harness assembly if it has an open circuit or damaged wiring.**

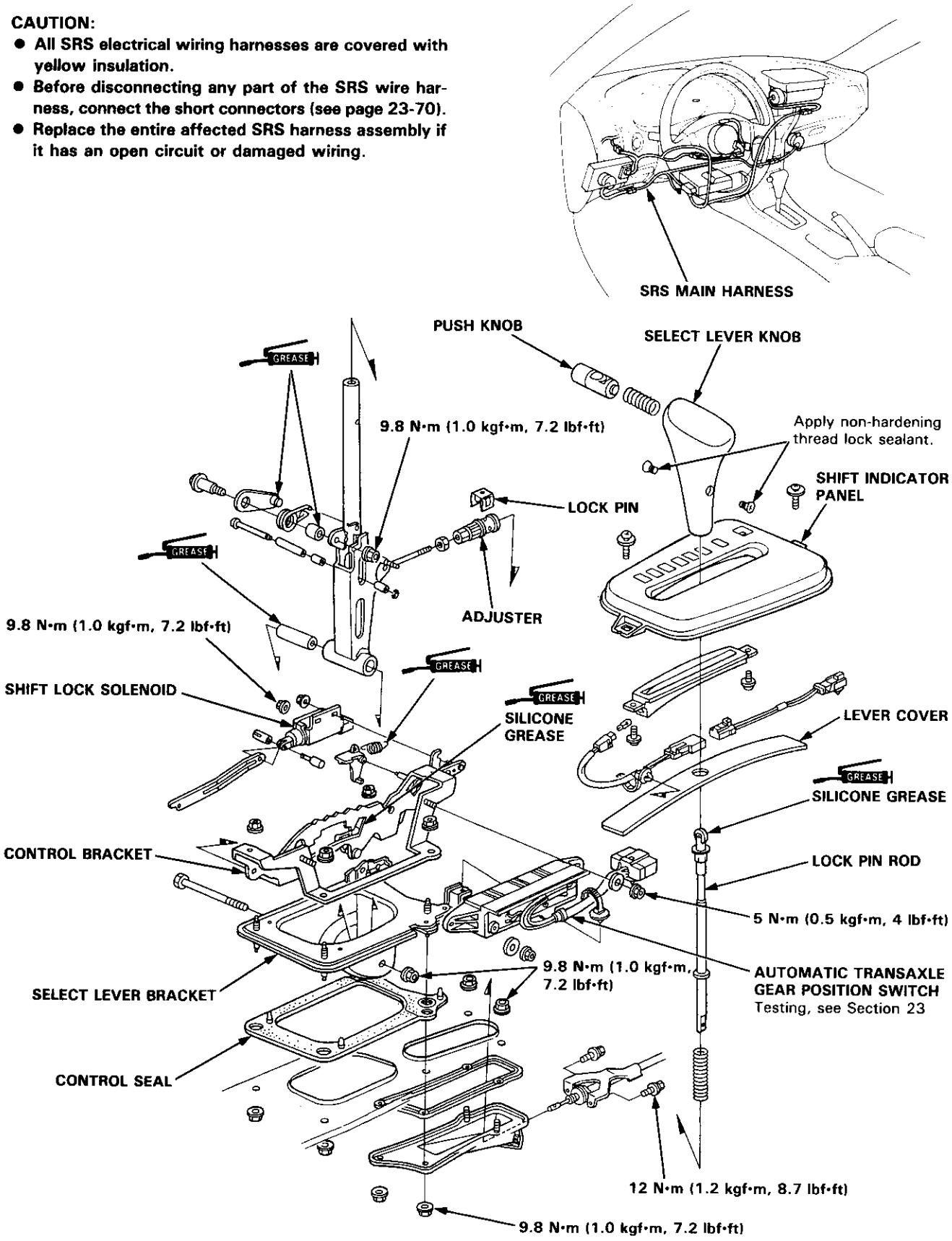

Adjustmet

CAUTION:
- **All SRS electrical wiring harnesses are covered with yellow insulation.**
- **Before disconnecting any part of the SRS wire harness, connect the short connectors (see page 23-70).**
- **Replace the entire affected SRS harness assembly if it has an open circuit or damaged wiring.**

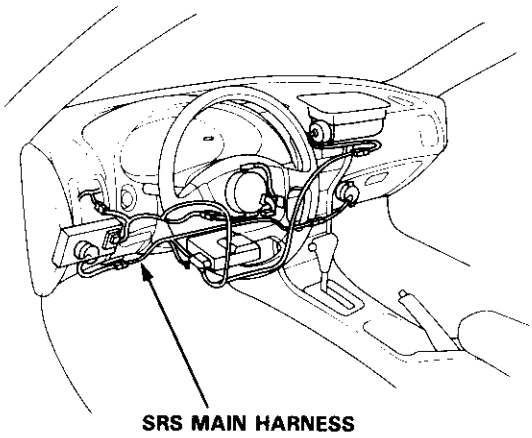

1. Check that the index mark on the indicator aligns with the [N] mark on the shift indicator panel when the transmission in NEUTRAL.

2. If not aligned, remove the center console (see section 20).

3. Remove the shift indicator panel mounting screws and adjust by moving the panel.

   NOTE: Whenever the shift indicator panel is removed, reinstall the panel as described above.

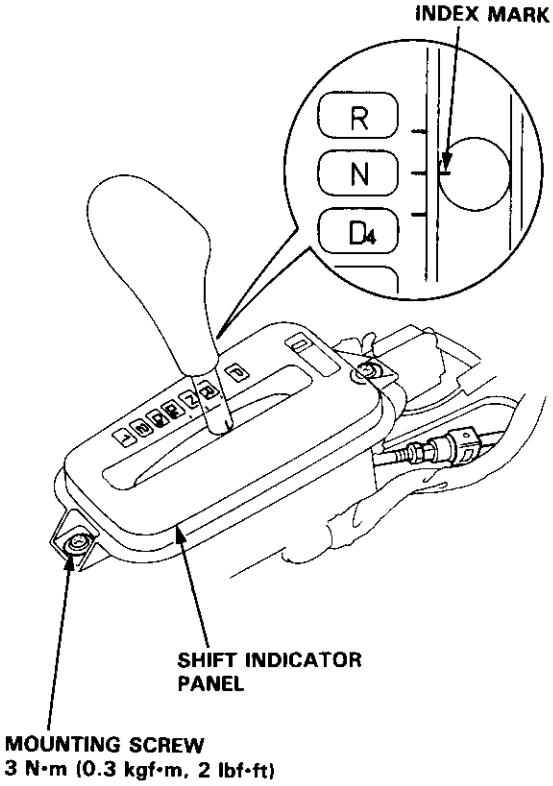

Throttle Control Cable

Inspection

NOTE: Before inspecting the throttle control cable, make sure:

- Throttle cable free play is correct (see section 11).
- Idle speed is correct (see section 11).
- To warm up the engine to normal operating temperature (the cooling fan comes on).

1. Verify that the throttle control cable is clamped correctly with three positions.

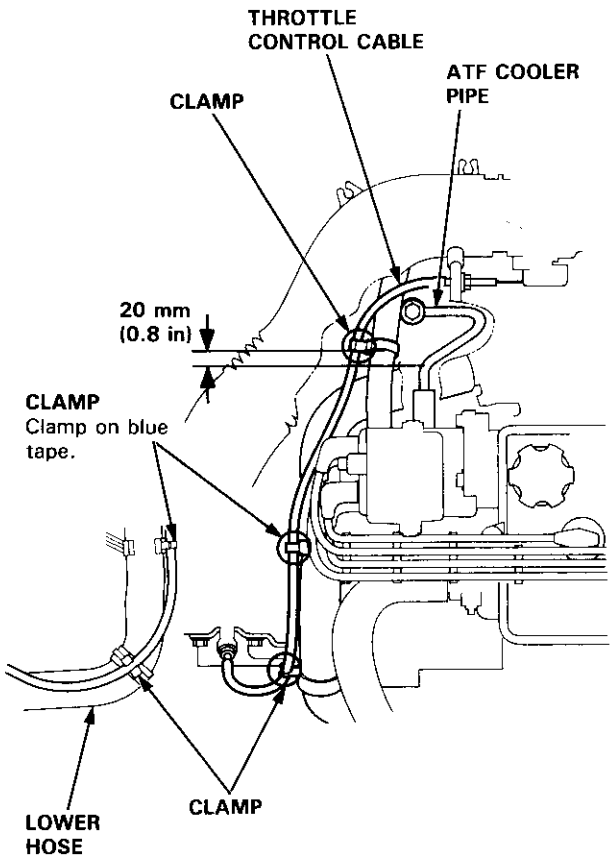

2. Verify that the throttle control level is synchronized with the throttle linkage while depressing and releasing the accelerator pedal.

3. If the throttle control lever is not synchronized with the throttle linkage, adjust the throttle control cable.

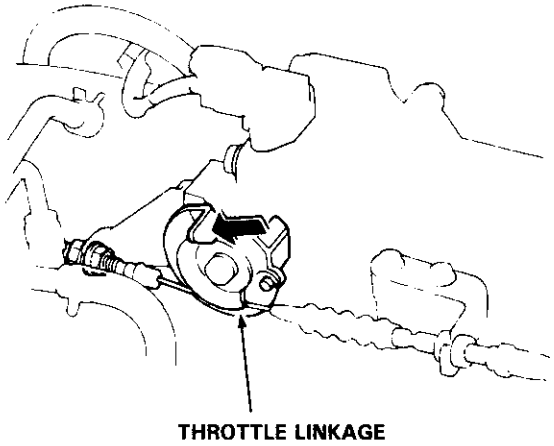

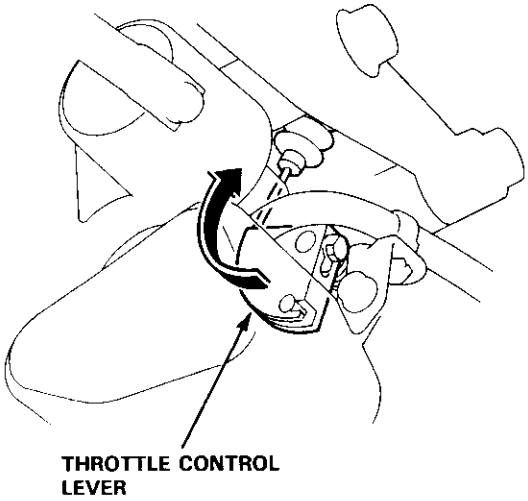

4. Check that there is play in the throttle control lever while depressing the accelerator pedal to the full throttle position.

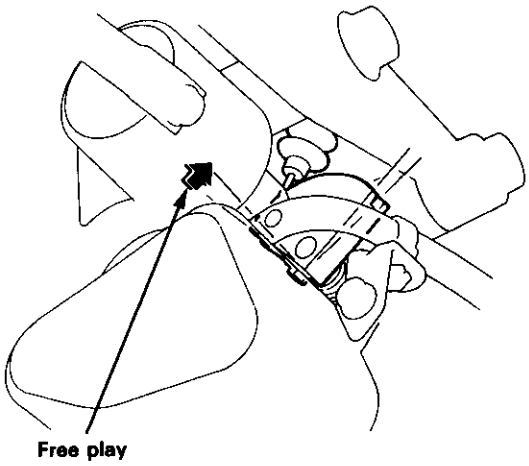

5. Remove the cable end of the throttle control cable from the throttle control lever.

6. Check that the throttle control lever moves smoothly.

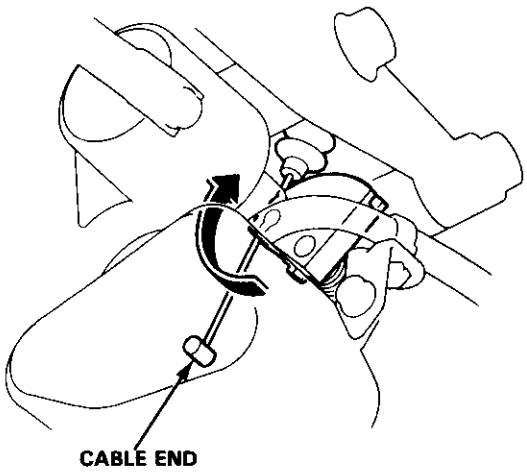

Throttle Control Cable

Adjustment

NOTE: Before adjusting the throttle control cable, make sure:

- Throttle cable free play is correct (see section 11).
- Idle speed is correct (see section 11).
- To warm up the engine to normal operating temperature (the cooling fan comes on).

1. Verify that the throttle control cable is clamped correctly with three positions.

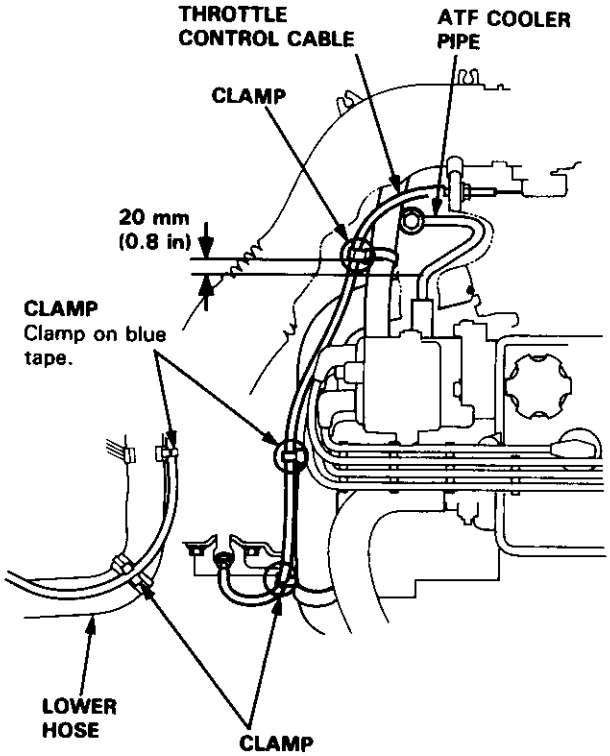

2. Verify that the throttle linkage is in the full-closed position.

3. Loosen the locknut of the throttle control cable at the throttle linkage.

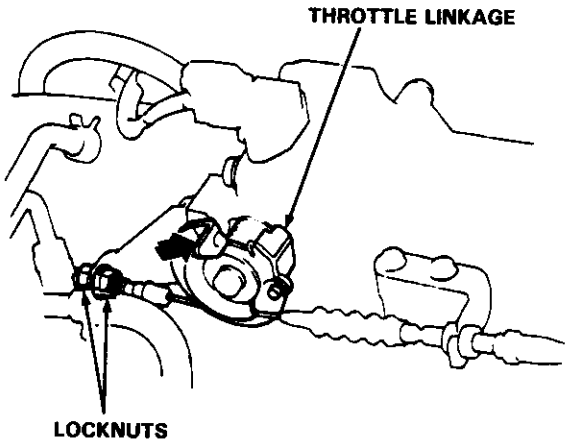

4. Remove the free play of the throttle control cable with the locknut, while pushing the throttle control lever to the full-closed potision as shown.

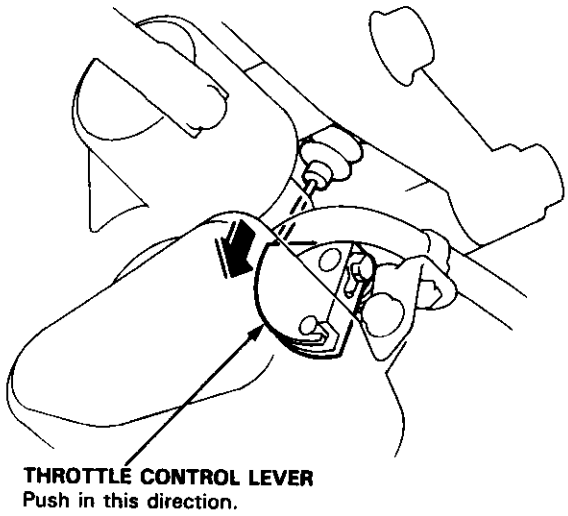

5. Tighten the locknuts.

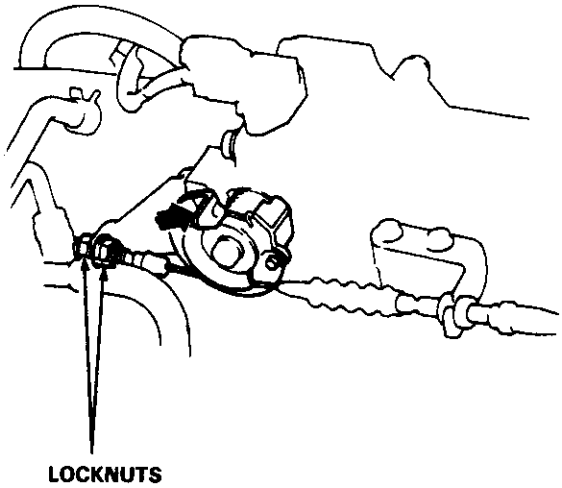

6. After tightening the locknuts, inspect the synchronization and throttle control lever movement.

Differential

Manual Transmission
B18B1 engine 15-1
B18C1 engine 15-9
Automatic Transmission 15-19

Differential (B18B1 engine)

Special Tools 15-2
Differential
Illustrated Index 15-3
Backlash Inspection 15-4
Final Driven Gear Replacement 15-4
Bearing Replacement 15-5
Oil Seal Removal 15-5
Side Clearance Adjustment 15-6
Oil Seal Installation 15-8

Special Tools

Ref. No.	Tool Number	Description	Qty	Page Reference
①	07JAD-PH80101	Seal Driver Attachment	1	15-8
②	07746-0030100	Driver, 40 mm I.D.	1	15-5, 6
③	07749-0010000	Driver	1	15-8
④	07947-SD90200	Seal Driver Attachment	1	15-8

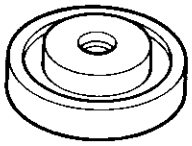

①

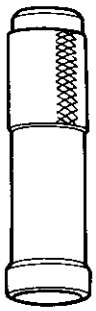

②

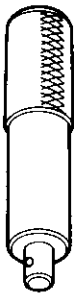

③

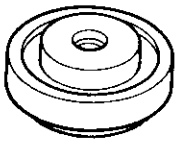

④

Illustrated Index

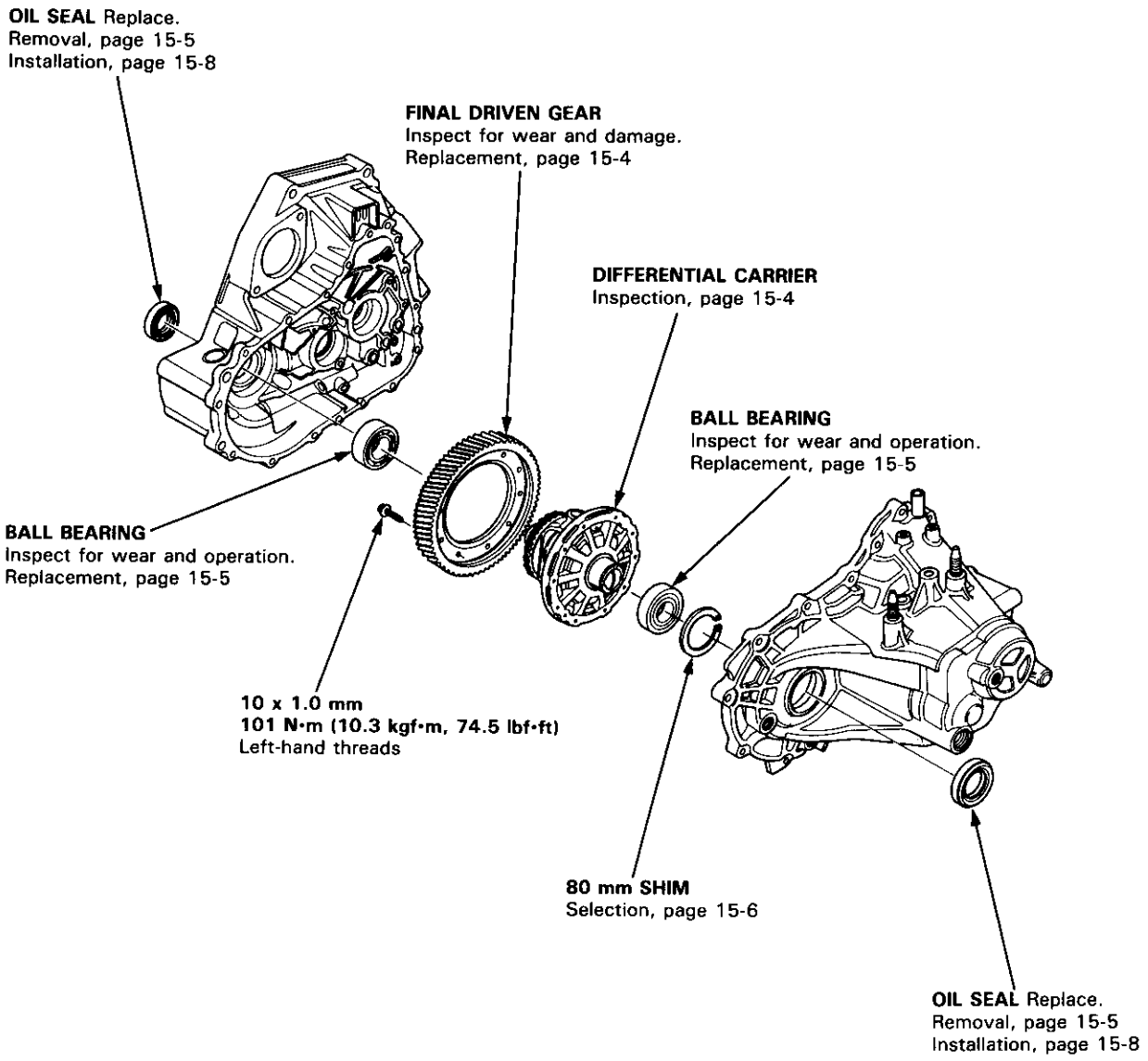

Differential (B18B1 engine)

Backlash Inspection

1. Place differential assembly on V-blocks and install both axles.

2. Measure the backlash of both pinion gears.

   Standard (New): 0.05-0.15 mm (0.002—0.006 in)

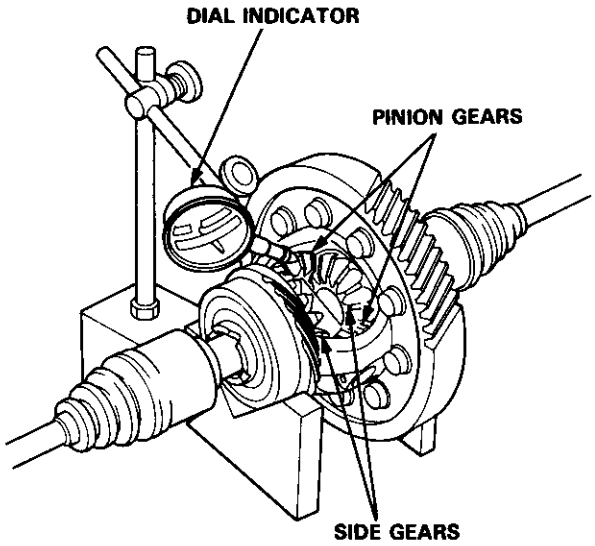

3. If the backlash is not within the standard, replace the differential carrier.

Final Driven Gear Replacement

1. Remove the bolts in a crisscross pattern in several steps, and remove the final driven gear from the differential carrier.

   NOTE: The final driven gear bolts have left-hand threads.

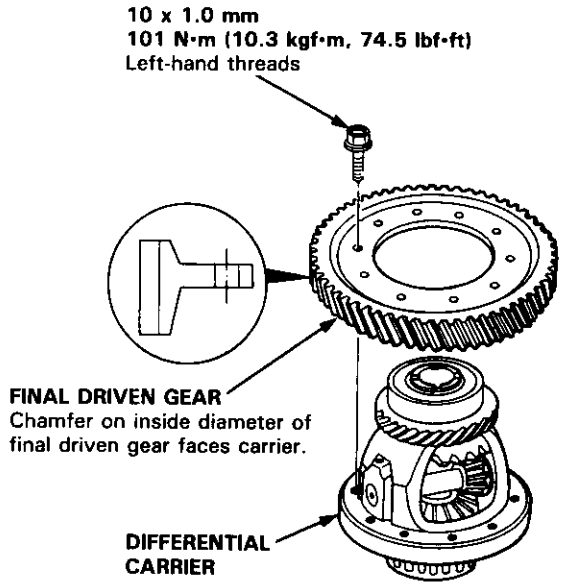

2. Install the final driven gear by tightening the bolts in a crisscross pattern in several steps.

Bearing Replacement

NOTE: Check the ball bearings for wear and rough rotation. If bearings are OK, removal is not necessary.

1. Remove the ball bearings using a standard bearing puller and bearing separator as shown.

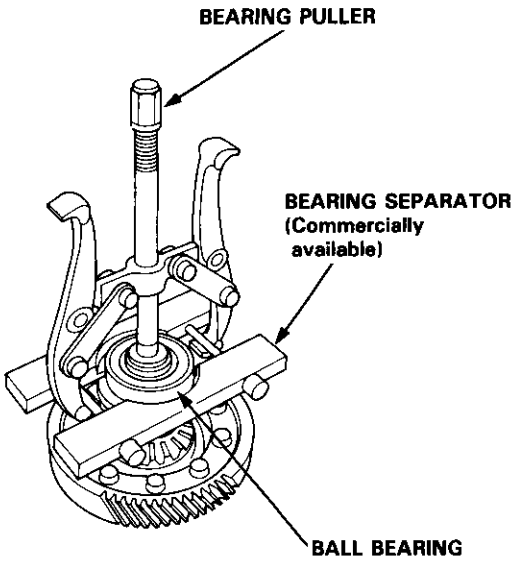

2. Install new ball bearings using the special tool as shown.

   NOTE: Drive the bearings squarely until they bottom against the carrier.

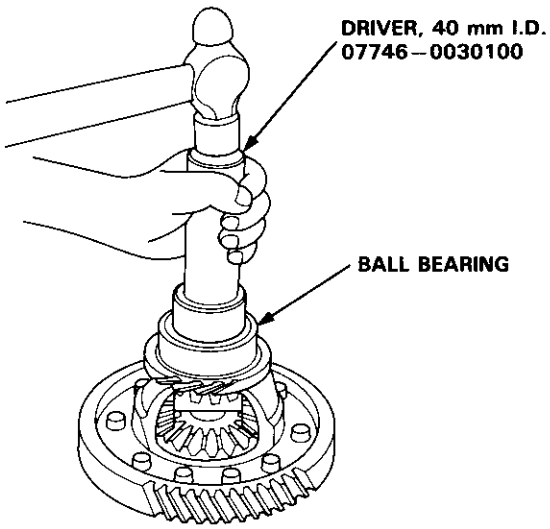

Oil Seal Removal

1. Remove the differential assembly.
2. Remove the 80 mm shim from the transmission housing.

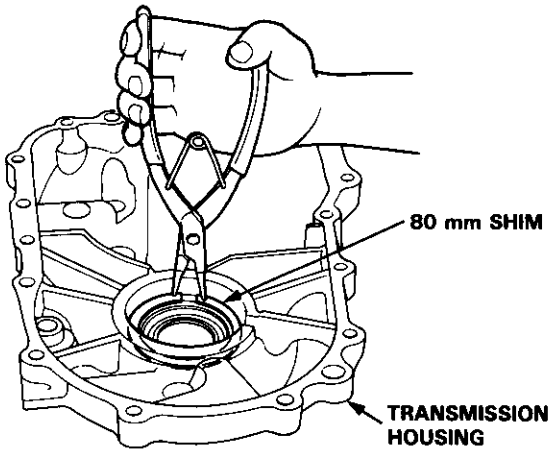

3. Remove the oil seal from the transmission housing.

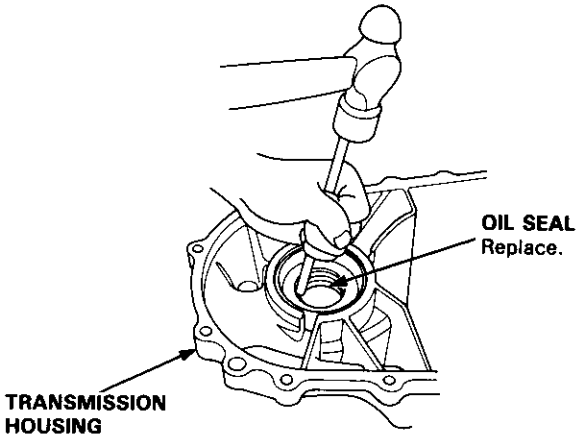

4. Remove the oil seal from the clutch housing.

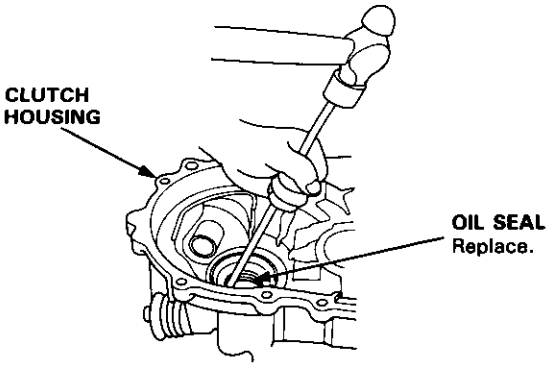

Side Clearance Adjustment

1. Install the differential assembly, making sure it bottoms in the clutch housing, using the special tool as shown.

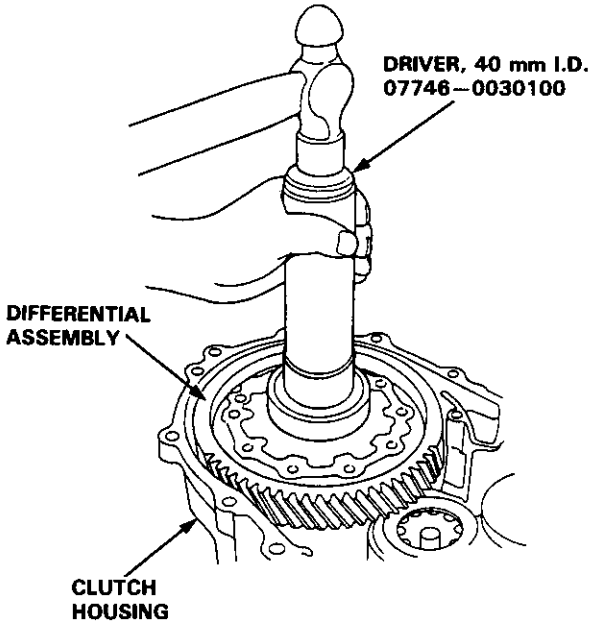

2. Install the 80 mm shim.

   NOTE: Install the 80 mm shim that was removed.

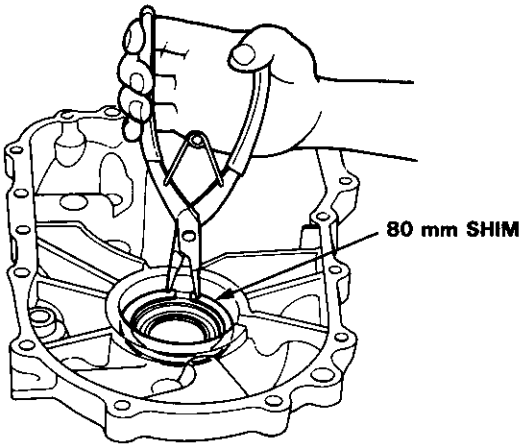

3. Install the transmission housing (see section 13).

   NOTE: Do not apply liquid gasket to the mating surface of the clutch housing.

4. Tighten the transmission housing attaching bolts (see section 13).

   8 x 1.25 mm
   27 N·m (2.8 kgf·m, 20 lbf·ft)

5. Use the special tool to bottom the differential assembly in the clutch housing.

6. Measure clearance between the 80 mm shim and bearing outer race in the transmission housing.

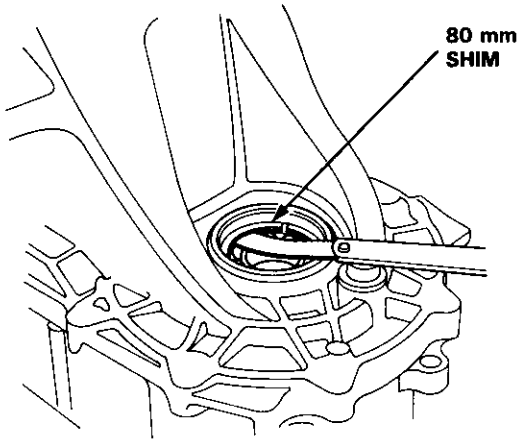

7. If the clearance is not within the standard, select a new 80 mm shim from the following table.

Standard: 0—0.10 mm (0.004 in)

80 mm Shim

	Part Number	Thickness
A	41441—PL3—B00	1.0 mm (0.0394 in)
B	41442—PL3—B00	1.1 mm (0.0433 in)
C	41443—PL3—B00	1.2 mm (0.0472 in)
D	41444—PL3—B00	1.3 mm (0.0512 in)
E	41445—PL3—B00	1.4 mm (0.0551 in)
F	41446—PL3—B00	1.5 mm (0.0591 in)
G	41447—PL3—B00	1.6 mm (0.0630 in)
H	41448—PL3—B00	1.7 mm (0.0669 in)
J	41449—PL3—B00	1.8 mm (0.0709 in)
K	41450—PL3—B00	1.05 mm (0.0413 in)
L	41451—PL3—B00	1.15 mm (0.0453 in)
M	41452—PL3—B00	1.25 mm (0.0492 in)
N	41453—PL3—B00	1.35 mm (0.0532 in)
P	41454—PL3—B00	1.45 mm (0.0571 in)
Q	41455—PL3—B00	1.55 mm (0.0610 in)
R	41456—PL3—B00	1.65 mm (0.0650 in)
S	41457—PL3—B00	1.75 mm (0.0689 in)
T	41441—P21—000	1.85 mm (0.0728 in)
U	41442—P21—000	1.90 mm (0.0748 in)
V	41443—P21—000	1.95 mm (0.0768 in)

NOTE: If the clearance measured in step 6 is within the standard, it is not necessary to go to step 9.

8. Remove the bolts and transmission housing.

9. Replace the 80 mm shim selected in step 7, then recheck the clearance.

10. Reassemble the transmission and install the transmission housing (see section 13).

Oil Seal Installation

1. Install the oil seal into the transmission housing using the special tools as shown.

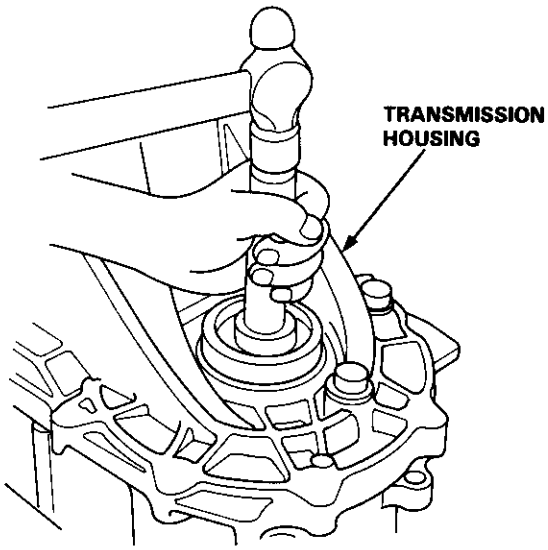

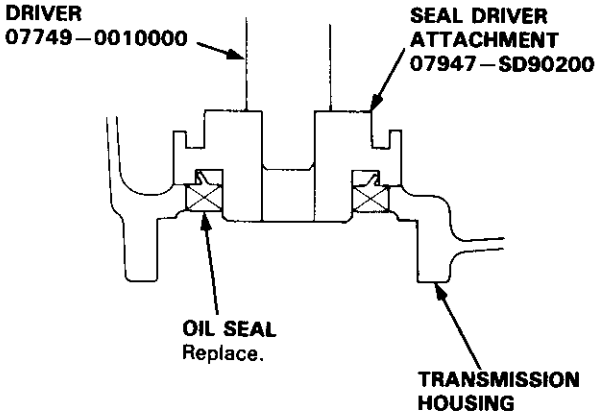

2. Install the oil seal into the clutch housing using the special tools as shown.

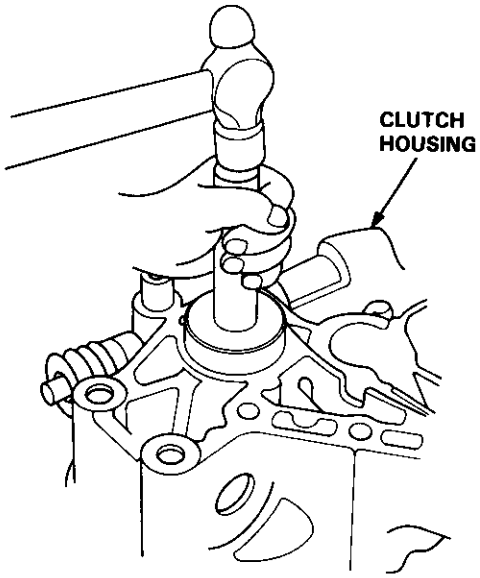

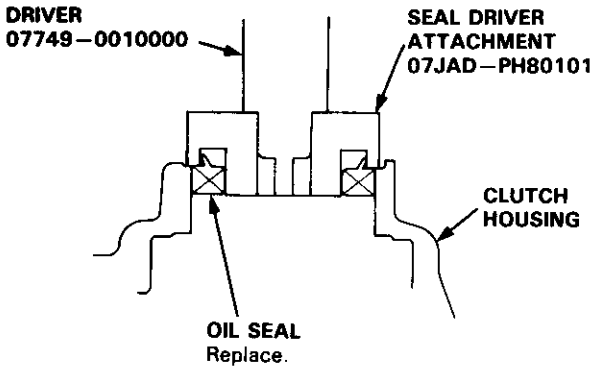

Differential (B18C1 engine)

Special Tools 15-10
Differential
Illustrated Index 15-11
Backlash Inspection 15-12
Final Driven Gear Replacement 15-12
Tapered Roller Bearing Replacement. 15-13
Oil Seal Removal 15-13
Bearing Outer Race Replacement ... 15-14
Tapered Roller Bearing Preload Adjustment 15-15
Oil Seal Installation 15-17

Special Tools

Ref. No.	Tool Number	Description	Qty	Page Reference
①	07HAJ-PK40201	Preload Inspection Tool	1	15-15
②	07JAD-PH80101	Seal Driver Attachment	1	15-14, 17
③	07NAD-PX40100	Driver Attachment	1	15-14
④	07746-0030100	Driver, 40 mm I.D.	1	15-13, 14
⑤	07749-0010000	Driver	1	15-14, 17
⑥	07947-SD90200	Seal Driver Attachment	1	15-17

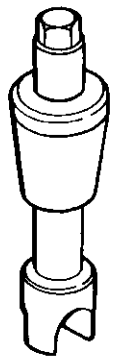

①

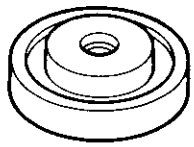

②

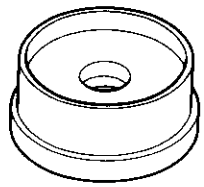

③

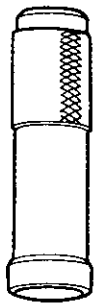

④

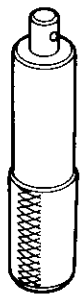

⑤

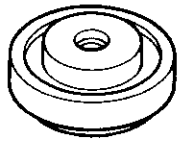

⑥

Differential (B18C1 engine)

Illustrated Index

NOTE: If the * mark parts were replaced, the tapered roller bearing preload must be adjusted (see page 15-15).

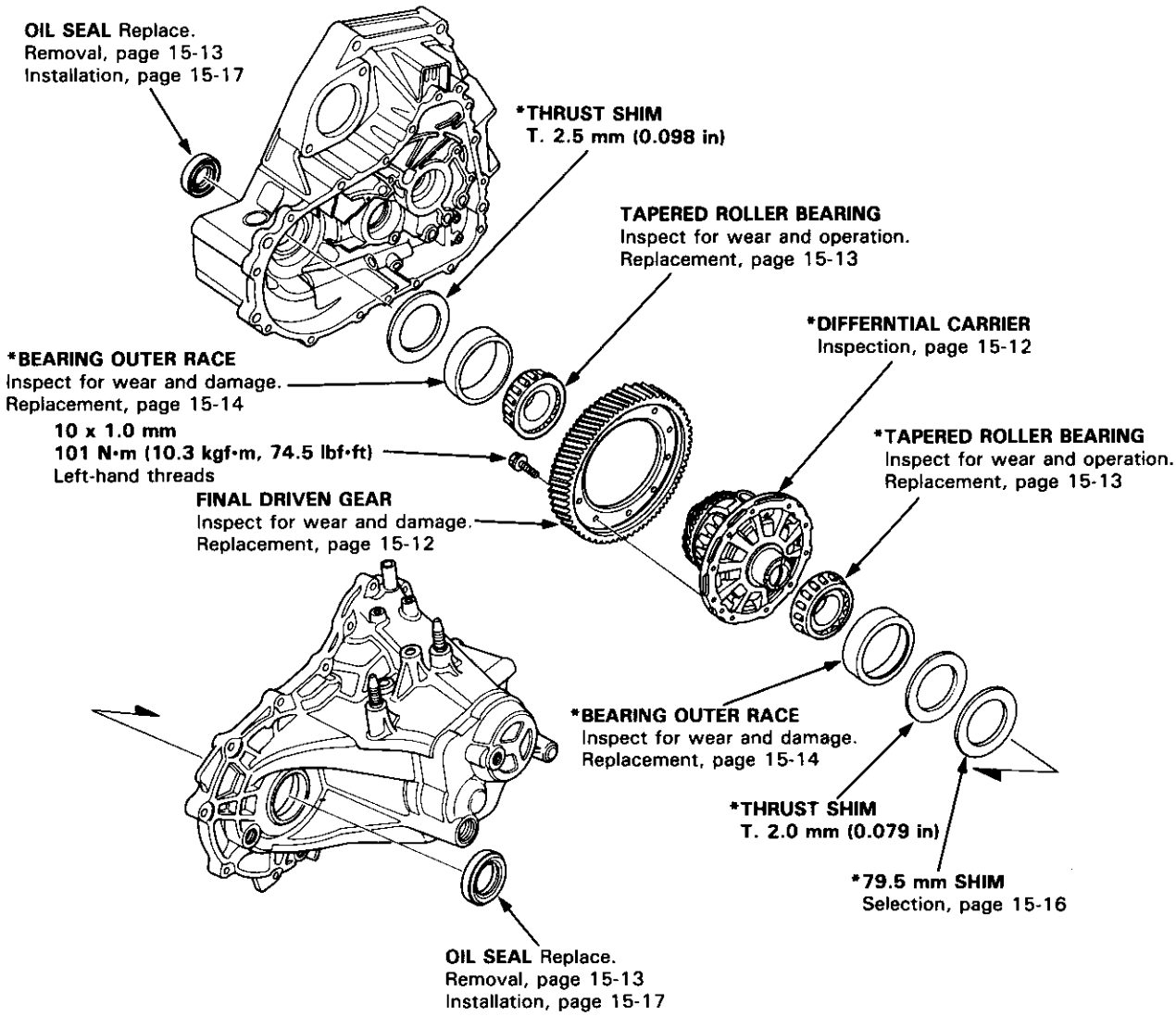

Differential (B18C1 engine)

Backlash Inspection

1. Place differential assembly on V-blocks and install both axles.

2. Measure the backlash of both pinion gears.

   Standard (New): 0.05–0.15 mm (0.002–0.006 in)

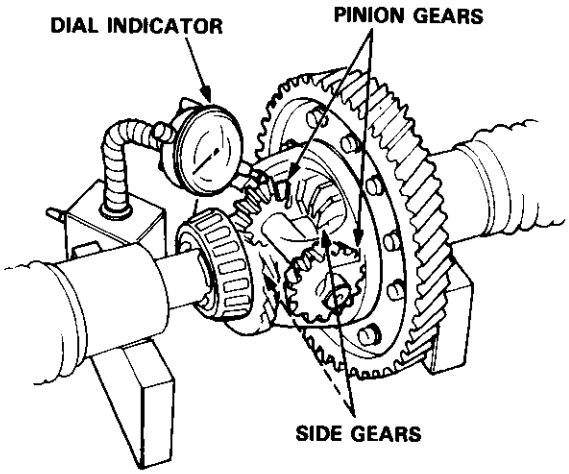

3. If the backlash is not within the standard, replace the differential carrier.

Final Driven Gear Replacement

1. Remove the bolts in a crisscross pattern in several steps, and remove the final driven gear from the differential carrier.

   NOTE: The final driven gear bolts have left-hand threads.

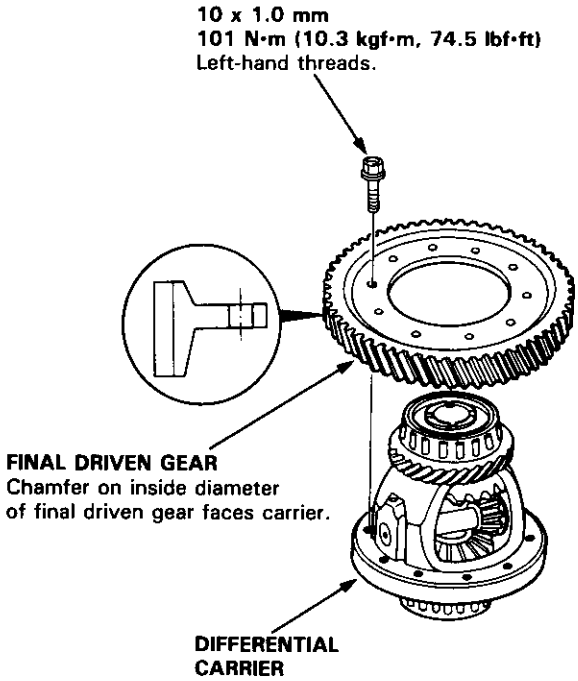

2. Install the final driven gear by tightening the bolts in a crisscross pattern in several steps.

Tapered Roller Bearing Replacement

NOTE:
- The tapered roller bearing and bearing outer race should be replaced as a set.
- Inspect and adjust the tapered roller bearing preload whenever the tapered roller bearing is replaced.
- Check the tapered roller bearings for wear and rough rotation. If tapered roller bearings are OK, removal is not necessary.

1. Remove the tapered roller bearings using a bearing puller and bearing separator as shown.

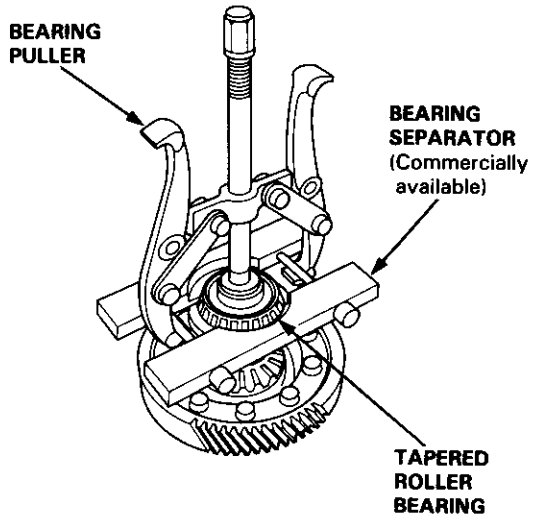

2. Install new tapered roller bearings using the special tool as shown.

   NOTE: Drive the tapered roller bearings on until they bottom against the differential carrier.

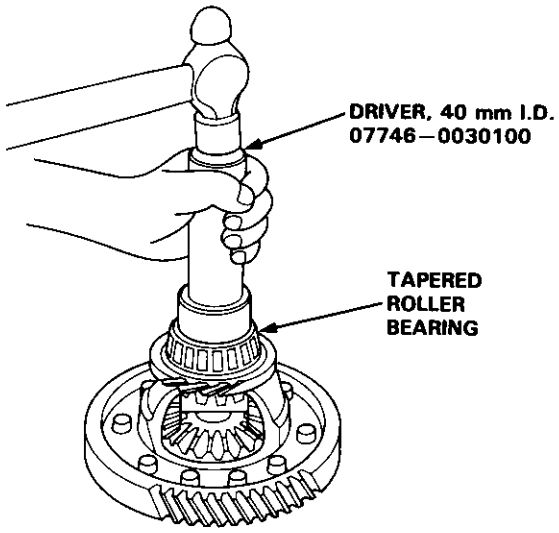

Oil Seal Removal

1. Remove the differential assembly.
2. Remove the oil seal from the transmission housing.

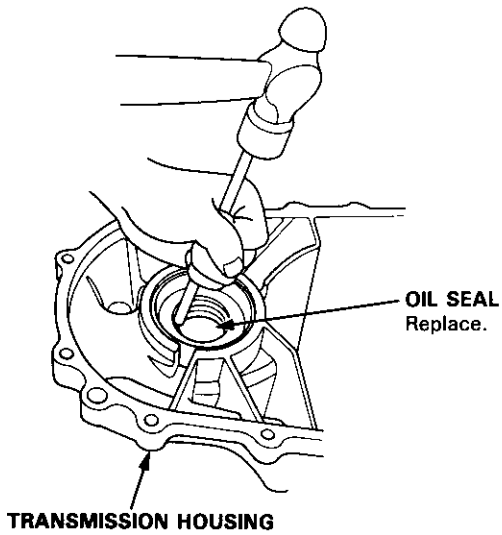

3. Remove the oil seal from the clutch housing.

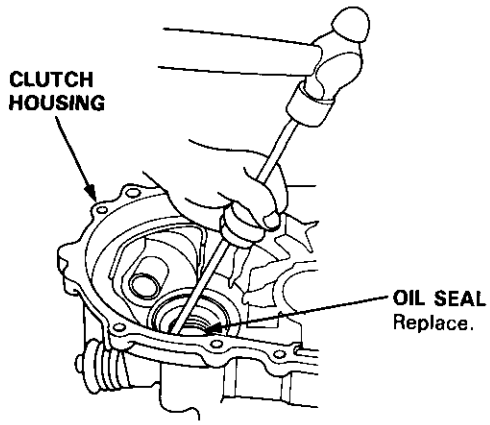

Bearing Outer Race Replacement

CAUTION: Do not reuse the thrust shim and the 79.5 mm shim if the outer race was driven out.

NOTE:
- The bearing outer race and tapered roller bearing should be replaced as a set.
- Inspect and adjust the tapered roller bearing preload whenever the tapered roller bearing is replaced.

1. Remove the oil seals from the transmission housing and clutch housing (see page 15-13).

2. Remove the bearing outer race, the thrust shim, and the 79.5 mm shim from the transmission housing.

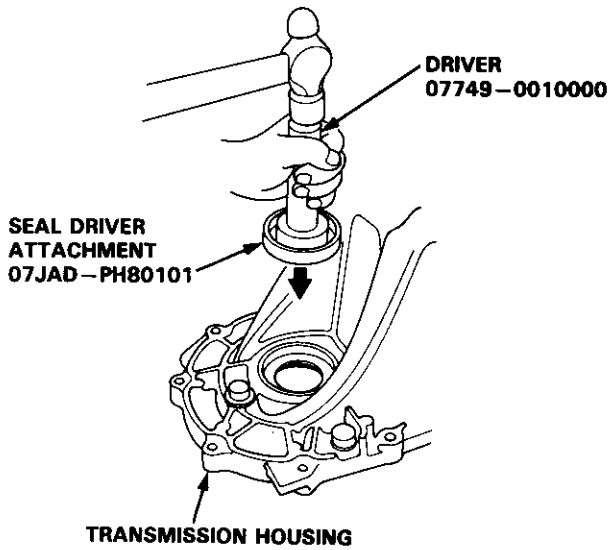

3. Remove the bearing outer race and thrust shim from the clutch housing.

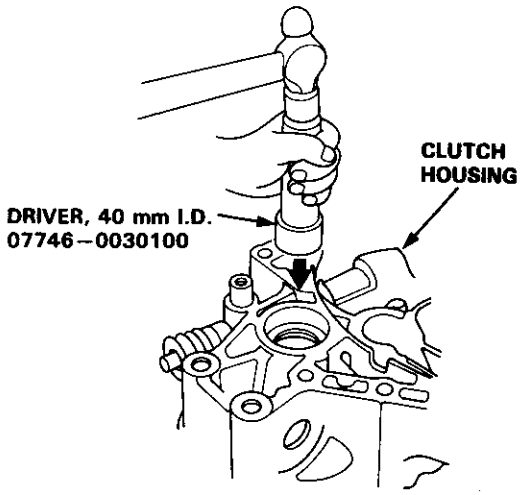

4. Install the new thrust shim and 79.5 mm shim, then drive the bearing outer races in the both housings using the special tools as shown.

   NOTE:
   - Install the bearing outer race squarely.
   - Check that there is no clearance between the bearing outer race, thrust shim, and transmission housing.

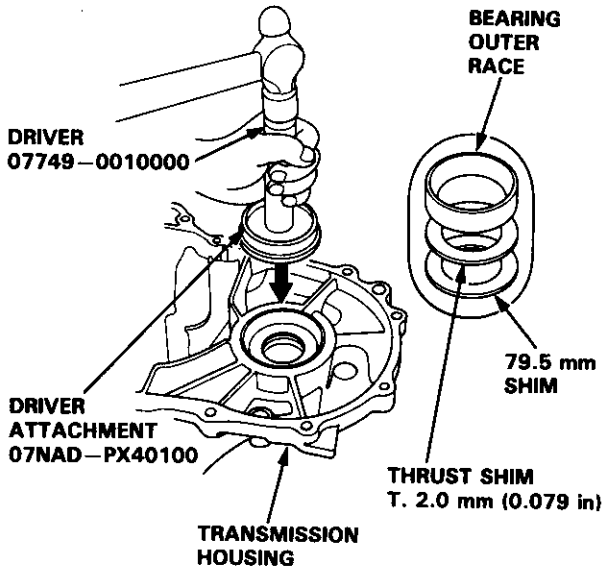

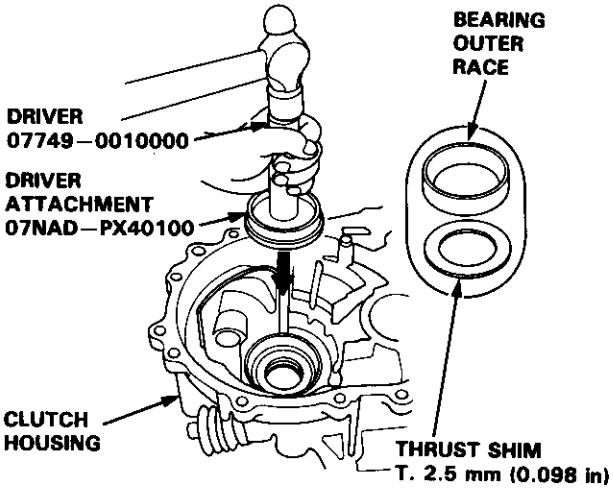

5. Install the oil seal (see page 15-17).

Tapered Roller Bearing Preload Adjustment

NOTE: If any of the items listed below were replaced, the tapered roller bearing preload must be adjusted.

- Transmission housing
- Clutch housing
- Differential carrier
- Tapered roller bearing and bearing outer race
- Thrust shim

1. Remove the bearing outer race, the thrust shim, and the 79.5 mm shim from the transmission housing (see page 15-14).

   CAUTION: Do not reuse the thrust shim if the bearing outer race was driven out.

2. First try the same size 79.5 mm shim that was removed.

   CAUTION: Do not use more than two shims.

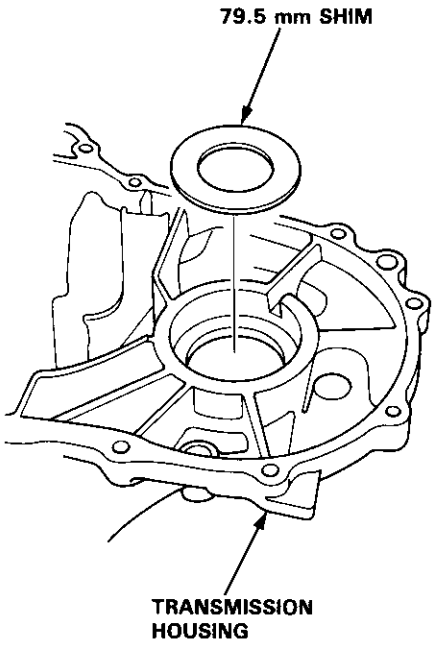

3. Install the thrust shim and 79.5 mm shim, then drive the bearing outer race in the transmission housing (see page 15-14).

   NOTE:
   - Install the bearing outer race squarely.
   - Check that there is no clearance between the bearing outer race, thrust shim and transmission housing.

4. With the mainshaft and countershaft removed, install the differential assembly, and torque the clutch housing and transmission housing.

   8 x 1.25 mm
   27 N·m (2.8 kgf·m, 20 lbf·ft)

   NOTE: It is not necessary to use sealing agent between the housings.

5. Rotate the differential assembly in both directions to seat the tapered roller bearings.

6. Measure the starting torque of the differential assembly with the special tool and a torque wrench.

   NOTE: Measure the tapered roller bearing preload in both directions.

   STANDARD: 2.11–3.04 N·m (21.5–31.0 kgf·cm, 18.7–26.9 lbf·in)

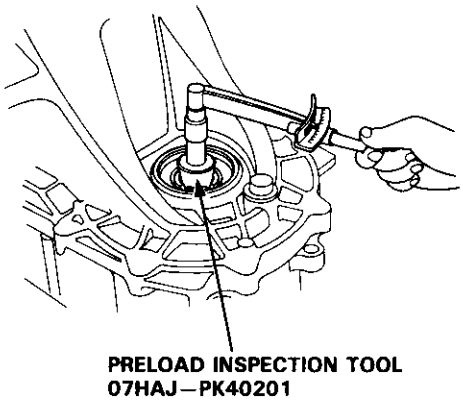

(cont'd)

Tapered Roller Bearing Preload Adjustment (cont'd)

7. If the tapered roller bearing preload is not within the standard, select the 79.5 mm shim from the following table which will give the tapered roller bearing preload closest to the standard mean value of 2.50 N•m (25.5 kgf•cm, 22 lbf•in).

   NOTE: Changing the 79.5 mm shim to the next size will increase or decrease tapered roller bearing preload about 0.3–0.4 N•m (3–4 kgf•cm, 2.6–3.5 lbf•in).

   79.5 mm SHIM

	Part Number	Thickness
AA	41460-PY4-000	0.66 mm (0.0260 in)
AB	41461-PY4-000	1.17 mm (0.0461 in)
AC	41462-PY4-000	1.20 mm (0.0472 in)
AD	41463-PY4-000	1.23 mm (0.0484 in)
AE	41464-PY4-000	1.26 mm (0.0496 in)
AF	41465-PY4-000	1.29 mm (0.0508 in)
AG	41466-PY4-000	1.32 mm (0.0520 in)
AH	41467-PY4-000	1.35 mm (0.0531 in)
AI	41468-PY4-000	1.38 mm (0.0543 in)
AJ	41469-PY4-000	1.41 mm (0.0555 in)
AK	41470-PY4-000	1.44 mm (0.0567 in)
AL	41471-PY4-000	1.47 mm (0.0579 in)
AM	41472-PY4-000	1.50 mm (0.0591 in)
AN	41473-PY4-000	1.53 mm (0.0602 in)
AO	41474-PY4-000	1.56 mm (0.0614 in)
AP	41475-PY4-000	1.59 mm (0.0626 in)
AQ	41476-PY4-000	1.62 mm (0.0638 in)
AR	41477-PY4-000	1.65 mm (0.0650 in)
AS	41478-PY4-000	1.68 mm (0.0661 in)
AT	41479-PY4-000	1.71 mm (0.0673 in)
AU	41480-PY4-000	1.74 mm (0.0685 in)
AV	41481-PY4-000	1.77 mm (0.0697 in)
AW	41482-PY4-000	1.80 mm (0.0709 in)
AX	41483-PY4-000	1.83 mm (0.0720 in)

8. Recheck the tapered roller bearing preload.

9. How to select the correct 79.5 mm shim:
   – 1) Compare the tapered roller bearing preload you get with the 79.5 mm shim that was removed with the specified mean preload of 2.50 N•m (25.5 kgf•cm, 22 lbf•in).
   – 2) If your measured tapered roller bearing preload is less than specified, subtract your's from the specified.
   If your's is more than specified, subtract the specified from your measurement.

   For example with a 1.38 mm (0.0543 in) shim:

   Ⓐ specified 2.50 N•m (25.5 kgf•cm, 22 lbf•in)
   – you measure 0.54 N•m (5.5 kgf•cm, 5 lbf•in)
   2.0 N•m (20 kgf•cm, 18 lbf•in) less

   Ⓑ you measure 3.29 N•m (33.5 kgf•cm, 29 lbf•in)
   – specified 2.50 N•m (25.5 kgf•cm, 22 lbf•in)
   0.8 N•m (8 kgf•cm, 7 lbf•in) more

   – 3) Each shim size up or down from standard makes about 0.3–0.4 N•m (3–4 kgf•cm, 2.6–3.5 lbf•in) difference in tapered roller bearing preload.

   - In example Ⓐ, your measured tapered roller bearing preload was 2.0 N•m (20 kgf•cm, 18 lbf•in) less than standard so you need a 79.5 mm shim five sizes thicker than standard (try the 1.53 mm (0.0602 in) shim and recheck).
   - In example Ⓑ, your's was 0.8 N•m (8 kgf•cm, 7 lbf•in) more than standard, so you need a thrust shim two sizes thinner (try the 1.32 mm (0.0520 in) shim and recheck).

10. After adjusting the tapered roller bearing preload, assemble the transmission, and install the transmission housing (see section 13).

    8 x 1.25 mm
    27 N•m (2.8 kgf•m, 20 lbf•ft)

11. Rotate the differential assembly in both directions to seat the tapered roller bearings.

Oil Seal Installation

1. Install the oil seal into the transmission housing using the special tools as shown.

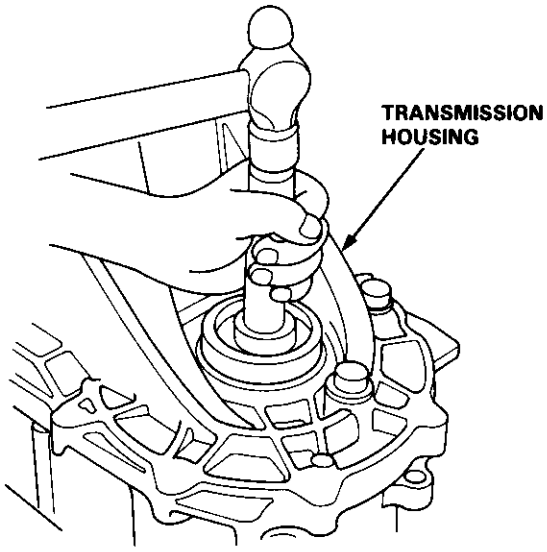

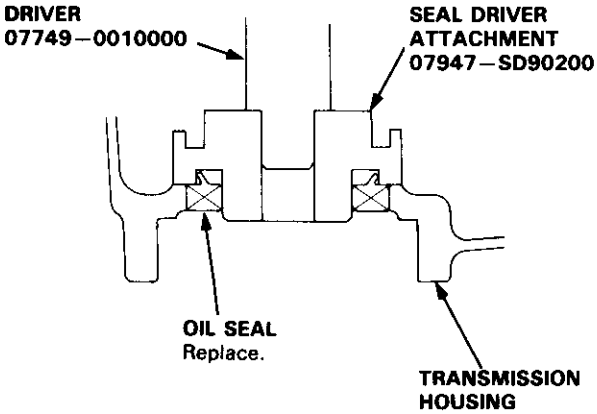

2. Install the new oil seal into the clutch housing using the special tools as shown.

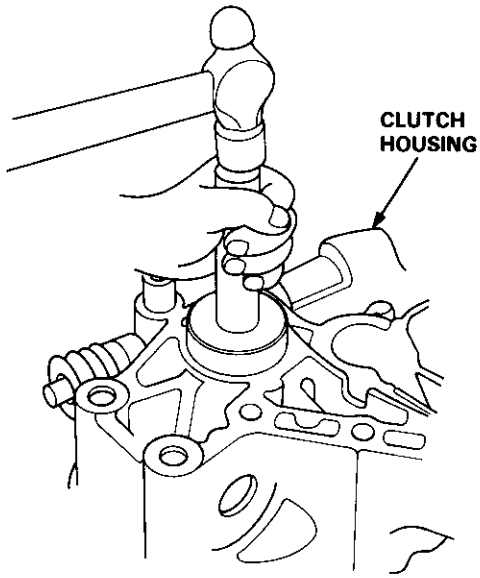

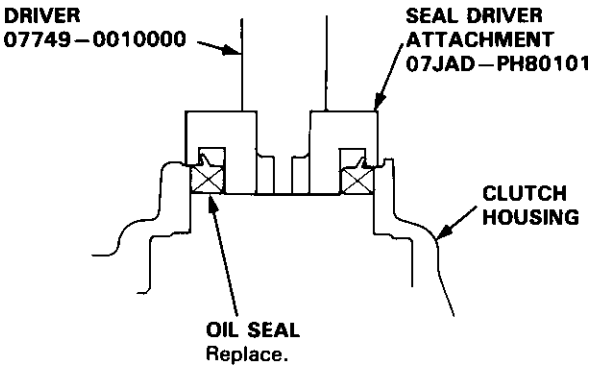

Differential (Automatic Transmission)

Special Tools 15-20
Differential (Automatic Transmission)
Illustrated Index 15-21
Backlash Inspection 15-22
Bearing Replacement 15-22
Differential Carrier Replacement 15-23
Oil Seal Removal 15-24
Oil Seal Installation/
Side Clearance 15-24

Ref. No.	Tool Number	Description	Qty	Page Reference
①	07JAD–PH80200	Pilot, 26 x 30 mm	1	15-26
②	07NAD–P200100	Driver, 52 x 55 mm	1	15-26
③	07746–0030100	Driver, 40 mm I.D.	1	15-22, 24, 25
④	07749–0010000	Driver	1	15-26
⑤	07947–SD90200	Driver Attachment	1	15-26

①

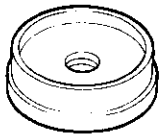

②

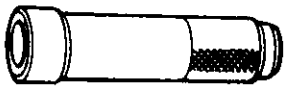

③

④

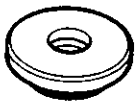

⑤

Illustrated Index

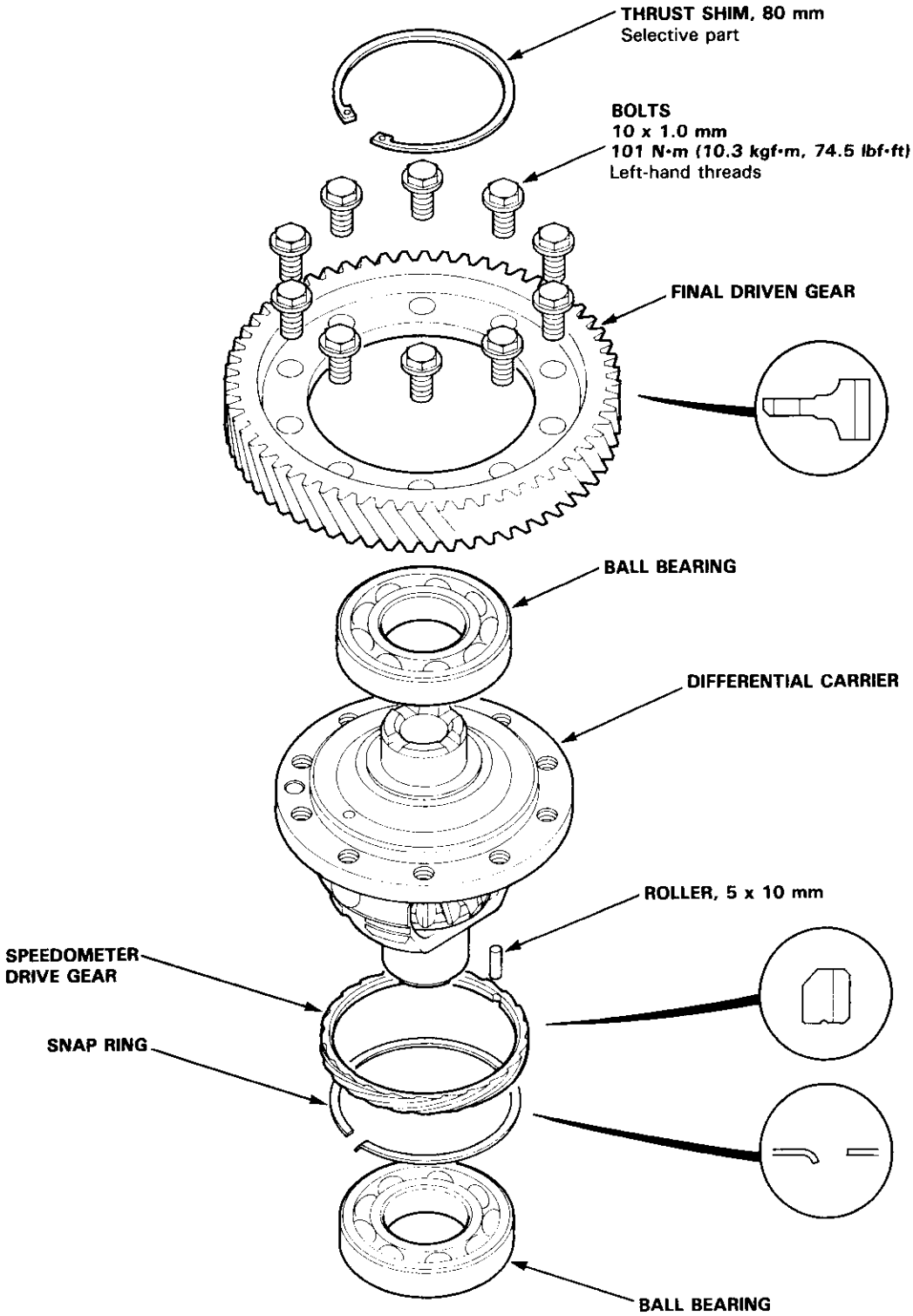

Differential (Automatic Transmission)

Backlash Inspection

1. Place the differential assembly on V-blocks and install both axles.

2. Check backlash of both pinion gears.

   Standard (New): 0.05–0.15 mm (0.002–0.006 in)

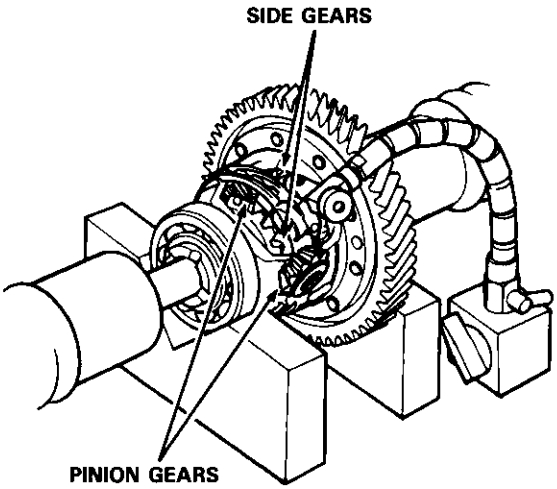

3. If backlash is out of tolerance, replace the differential carrier.

Bearing Replacement

NOTE: Check the bearings for wear and rough rotation. If the bearings are OK, removal is not necessary.

1. Remove the ball bearings using a bearing puller.

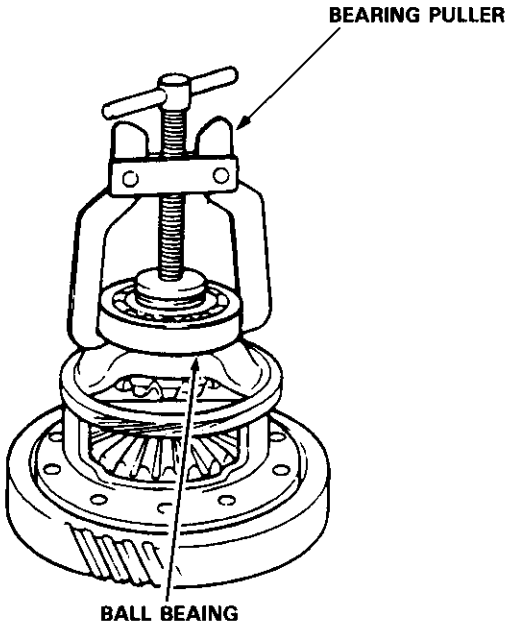

2. Install the new ball bearings using the special tool with a press as shown.

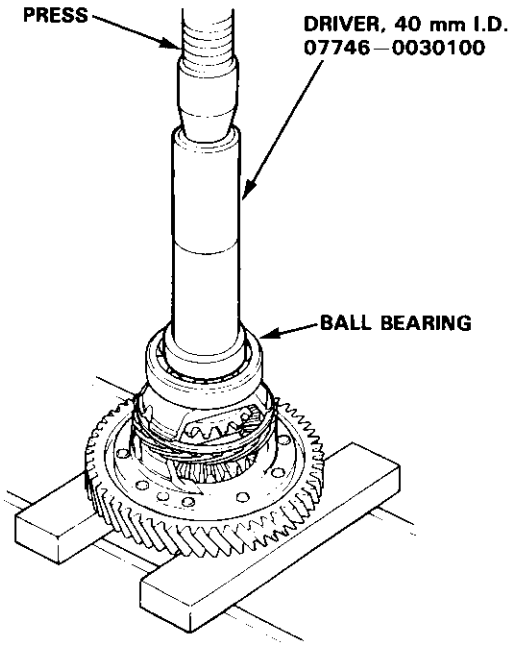

Differential Carrier Replacement

1. Remove the final driven gear from the differential carrier.

   NOTE: The final driven gear bolts have left-hand threads.

2. Pry the snap ring off differential carrier, then remove the speedometer drive gear and 5 x 10 mm roller.

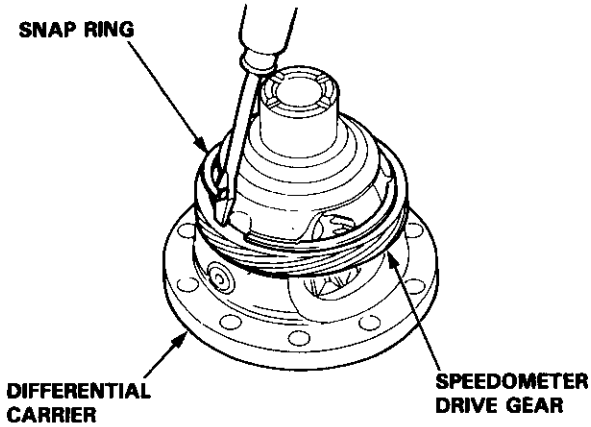

3. Install the 5 x 10 mm roller in the differential carrier.

4. Install the speedometer drive gear with its chamfered side facing the carrier. Align the cutout on the bore of the speedometer drive gear with the 5 x 10 mm roller.

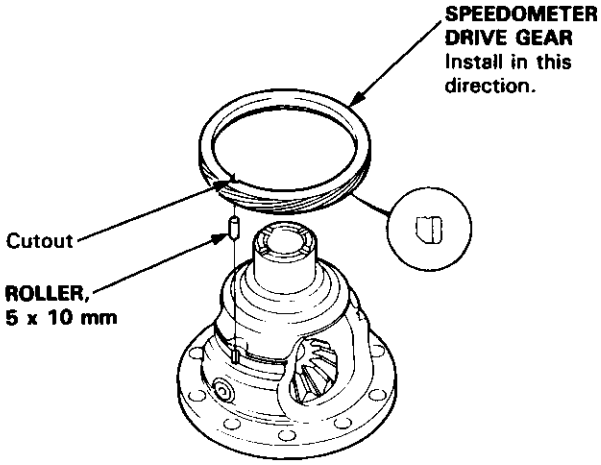

5. Align the hooked end of the snap ring with the pinion shaft as shown, then install the snap ring in the differential carrier groove.

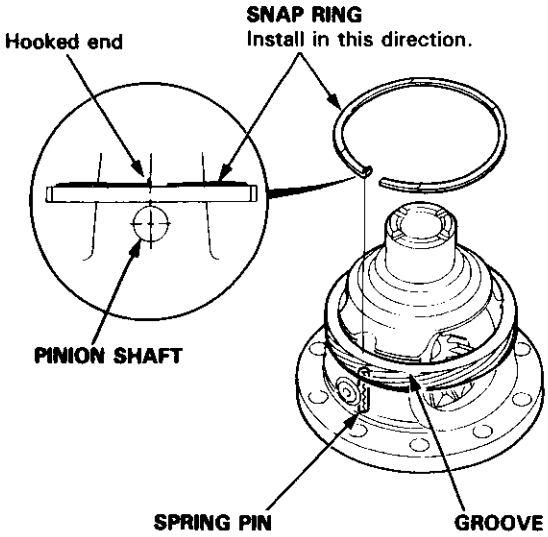

6. Install the final driven gear, then tighten the bolts to the specified torque.

   TORQUE: 101 N·m (10.3 kgf·m, 74.5 lbf·ft)

   NOTE: The final driven gear bolts have left-hand threads.

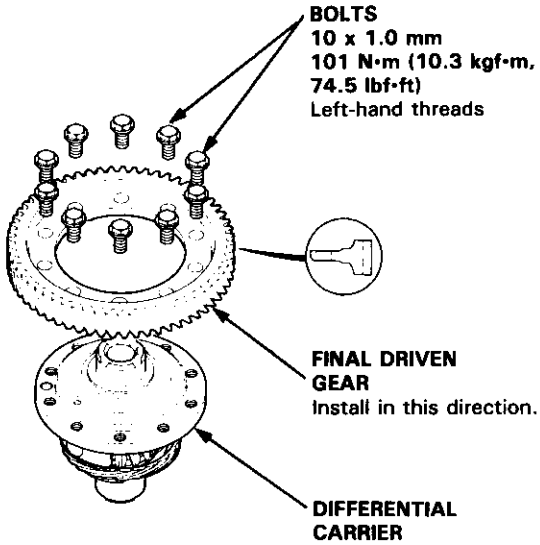

7. Install the ball bearings (see page 15-22).

Differential (Automatic Transmission)

Oil Seal Removal

1. Remove the differential assembly.
2. Remove the oil seal from the transmission housing.

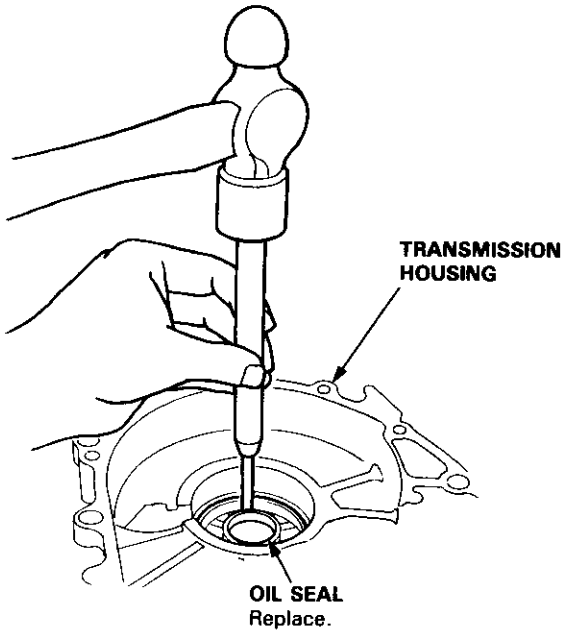

3. Remove the oil seal from the torque converter housing.

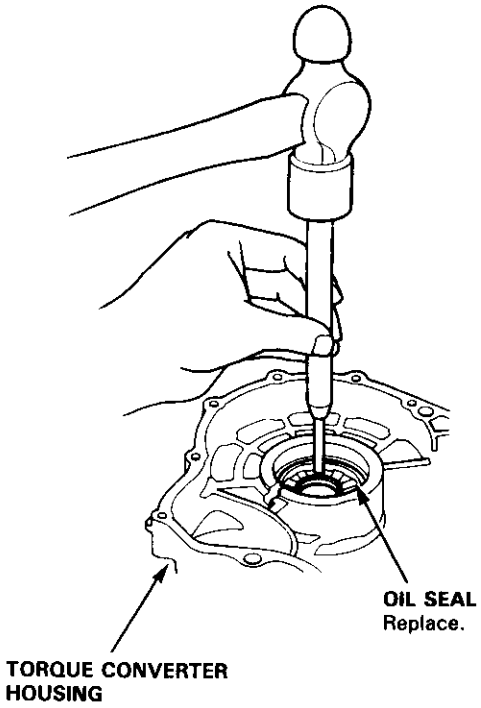

Oil Seal Installation/Side Clearance

1. Install a 2.50 mm (0.098 in) thrust shim in the transmission housing.

   NOTE: Do not install the oil seal yet.

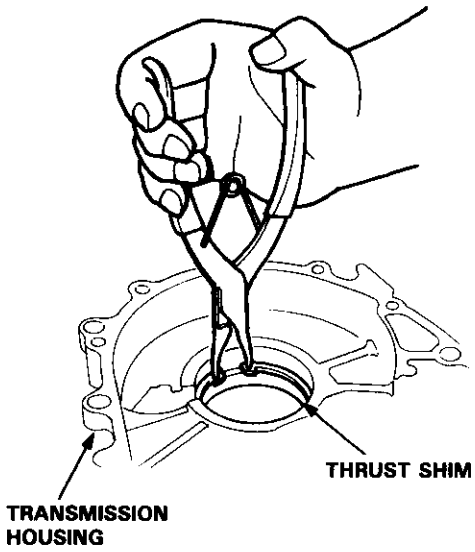

2. Install the differential assembly into the torque converter housing using the special tool as shown.

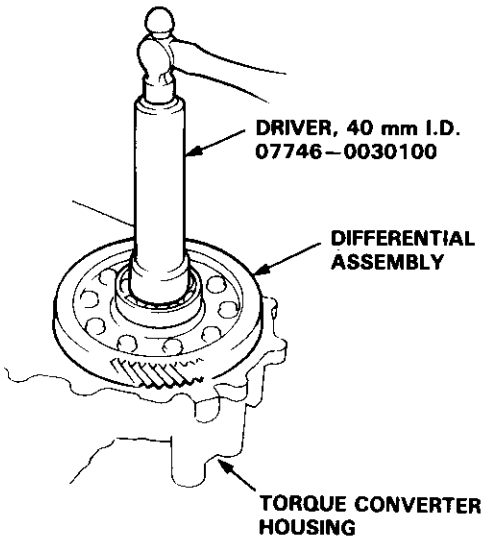

3. Assemble the transmission (see section 14). Install the transmission housing and tighten the bolts (see section 14).

4. Tap on the transmission housing side of the differential assembly with the special tool to seat the differential assembly in the torque converter housing.

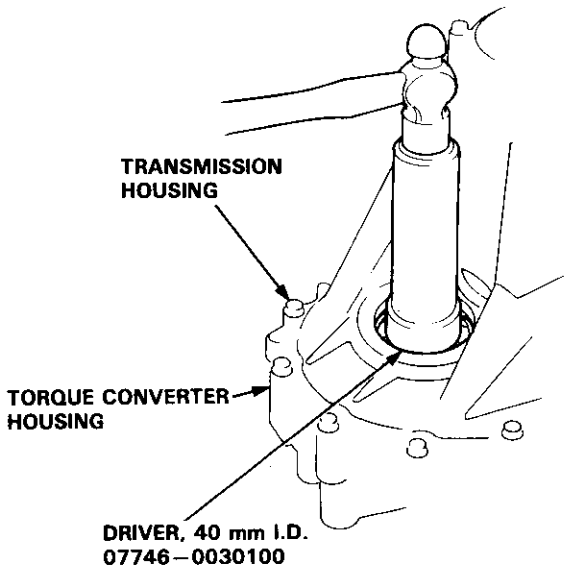

5. Measure the clearance between the thrust shim and outer race of the ball bearing in the transmission housing.

STANDARD: 0–0.15 mm (0–0.006 in)

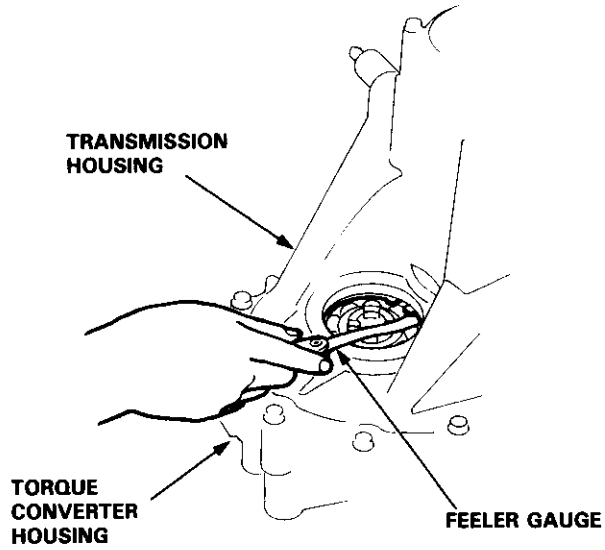

6. If out of limits, select a new thrust shim from the following table:

THRUST SHIM, 80 mm

Part Number	Thickness
90414–689–000	2.50 mm (0.09843 in)
90415–689–000	2.60 mm (0.10236 in)
90416–689–000	2.70 mm (0.10630 in)
90417–689–000	2.80 mm (0.11024 in)
90418–689–000	2.90 mm (0.11416 in)
90419–PH8–000	3.00 mm (0.11811 in)

NOTE: If the thrust shim-to-ball bearing outer race clearance measured in step 5 is less than the specification, it is not necessary to perform steps 7 and 8.

7. Remove the transmission housing.

8. Replace the 2.50 mm (0.098 in) thrust shim with the one of the correct thickness selected in step 6.

9. Install the transmission housing (see section 14).

(cont'd)

Oil Seal Installation/Side Clearance (cont'd)

9. Install the oil seal in the transmission housing using the special tools as shown.

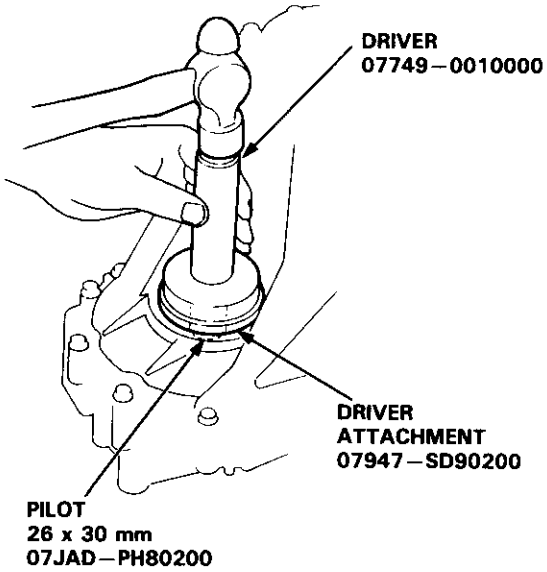

10. Install the oil seal in the torque converter housing using the special tools as shown.

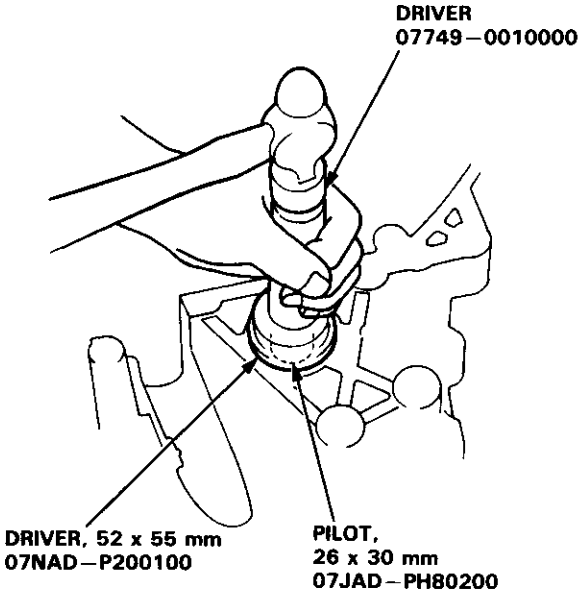

Driveshafts

Special Tools 16-2
Driveshafts
  Inspection 16-3
  Removal 16-3
  Disassembly 16-5
  Reassembly 16-7
  Installation 16-10
Intermediate Shaft
  Removal 16-12
  Disassembly 16-12
  Reassembly 16-13
  Installation 16-15

Special Tools

Ref. No.	Tool Number	Description	Qty	Page Reference
①	07JAF – SH20400	Support Base Attachment	1	16-13
②	07LAD – PW50601	Attachment, 40 x 50 mm I.D.	1	16-14
③	07MAC – SL00200	Ball Joint Remover, 28 mm	1	16-4
④	07746 – 0010300	Attachment, 42 x 47 mm	1	16-13
⑤	07746 – 0010400	Attachment, 52 x 55 mm	1	16-14
⑥	07746 – 0030400	Attachment, 35 mm I.D.	1	16-14
⑦	07749 – 0010000	Driver	1	16-13, 14
⑧	07965 – SD90100	Support Base	1	16-13

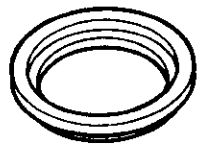

①

②

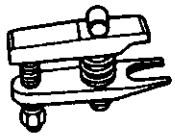

③

④

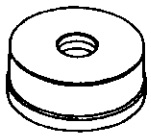

⑤

⑥

⑦

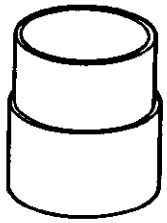

⑧

Inspection

Driveshaft Boot
Check the boots on the driveshaft for cracks, damage, leaking grease or loose boot bands.
If any damage is found, replace the boot and boot bands.

Loose Splines
Turn the driveshaft by hand and make sure the splines and joint are not excessively loose.
If damage is found, replace the inboard joint.

Twisted or Cracked
Make sure the driveshaft is not twisted or cracked.
Replace it if necessary.

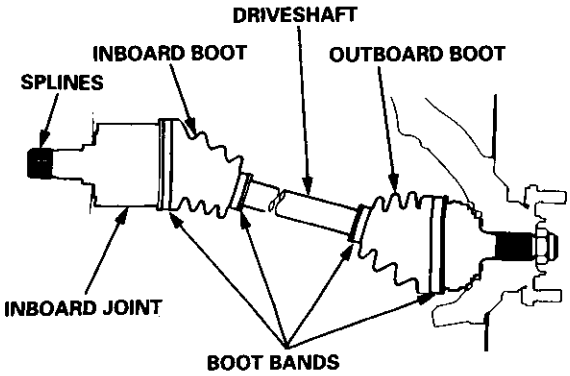

Removal

1. Loosen the wheel nuts slightly.
2. Raise the front of car and support it with safety stands in the proper locations (see section 1).
3. Remove the wheel nuts and front wheels.
4. Drain the transmission oil or fluid (see section 13 or 14).

   NOTE: It is not necessary to drain the differential oil when the left driveshaft is removed.

5. Raise the locking tab on the spindle nut, then remove the nut.

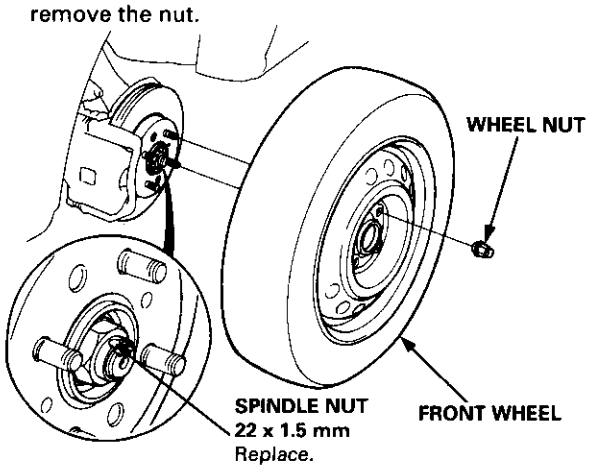

6. Remove the self-locking nut and self-locking bolt.

   CAUTION: Replace the self-locking bolts if you can easily thread a non-self-locking nut past their nylon locking inserts.
   (If should require 1 N·m (0.1 kgf·m, 0.7 lbf·ft) of torque to turn the nut on the bolt).

7. Remove the damper fork.

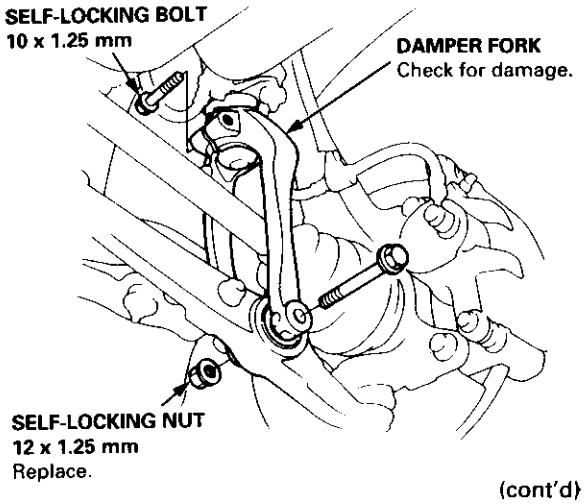

(cont'd)

Removal (cont'd)

8. Remove the cotter pin from the lower arm ball joint castle nut, and remove the nut.

9. Install a 12 mm hex nut on the ball joint. Be sure that the hex nut is flush with the ball joint pin end, or the threaded section of the ball joint pin might be damaged by the ball joint remover.

10. Use the ball joint remover, 28 mm, as shown on page 18-11, to separate the ball joint and lower arm.

    CAUTION: Be careful not to damage the ball joint boot.

    NOTE: If necessary, apply penetrating type lubricant to loosen the ball joint.

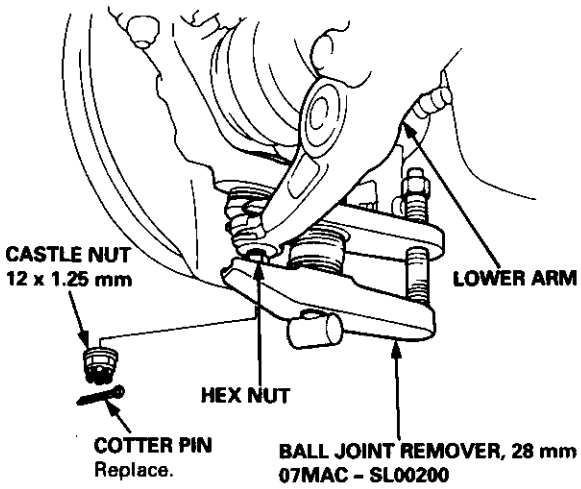

11. Pry the driveshaft assembly with a screwdriver, as shown, to force the set ring at the driveshaft end past the groove.

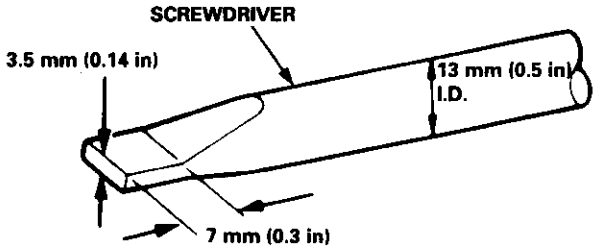

12. Pull the inboard joint, and remove the right driveshaft from the differential case as an assembly.

    CAUTION:
    - **Do not pull on the driveshaft, as the inboard joint may come apart.**
    - **Use care when prying out the assembly, and pull it straight to avoid damaging the differential oil seal or the intermediate shaft outer seal.**

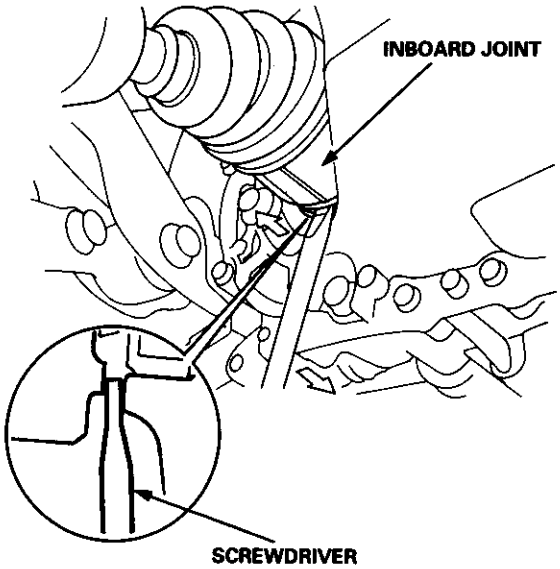

— Left Driveshaft:
Remove the left driveshaft from the bearing support by tapping the inboard joint of the driveshaft with a plastic hammer.

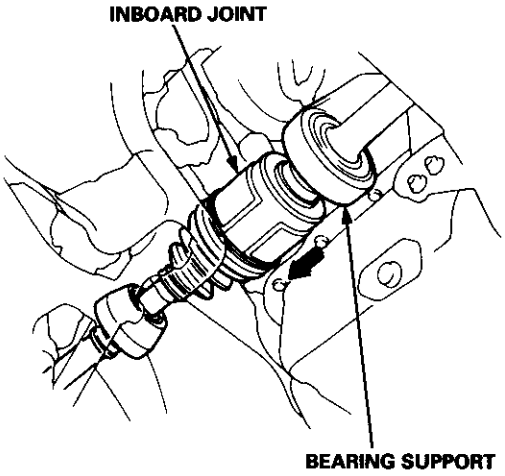

13. Pull the knuckle outward, and remove the driveshaft outboard joint from the front wheel hub using a plastic hammer.

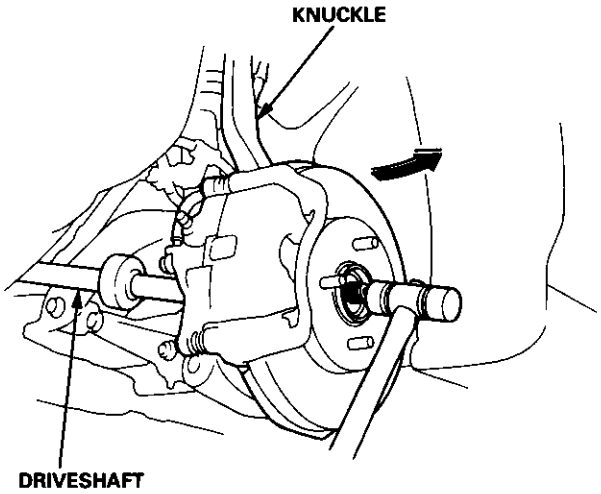

Disassembly

1. Remove the set ring from the inboard joint.

2. To remove the boot band, pry up the locking tabs with a screwdriver and raise the end of the band.

CAUTION: Take care not to damage the boot.

NOTE: Carefully clamp the driveshaft in a vise with soft jaws.

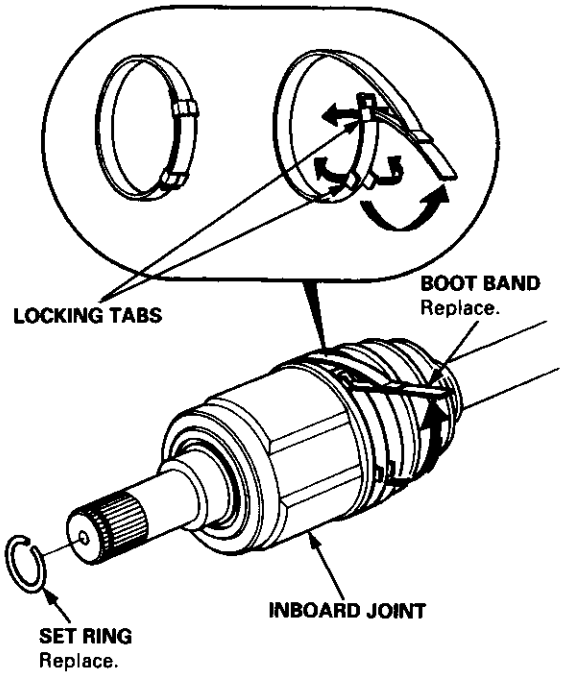

— If the boot band is the welded type, cut it off as shown.

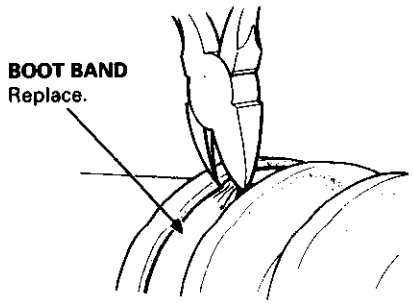

(cont'd)

Disassembly (cont'd)

3. Mark each roller and inboard joint to identify the locations of rollers and grooves in the inboard joint. Then remove the inboard joint on the shop towel.

   NOTE: Be careful not to drop the rollers when separating them from the inboard joint.

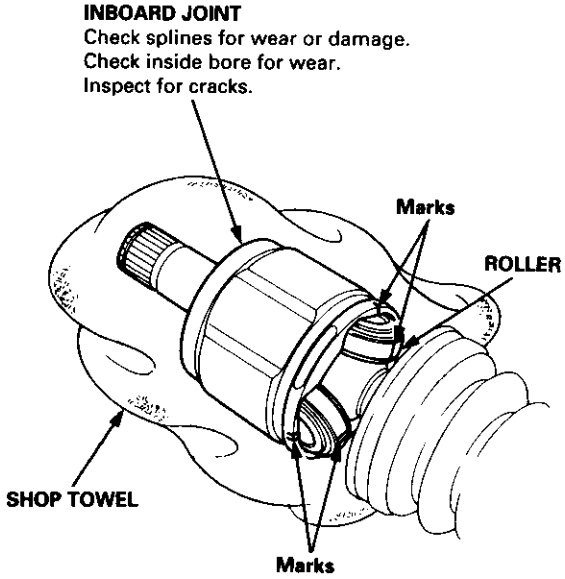

4. Mark the rollers and spider to identify the locations of rollers on the spider. Then remove the rollers.

5. Remove the circlip.

6. Mark the spider and driveshaft to identify the position of the spider on the shaft.

7. Remove the spider using a commercially available bearing remover.

8. Remove the stopper ring.

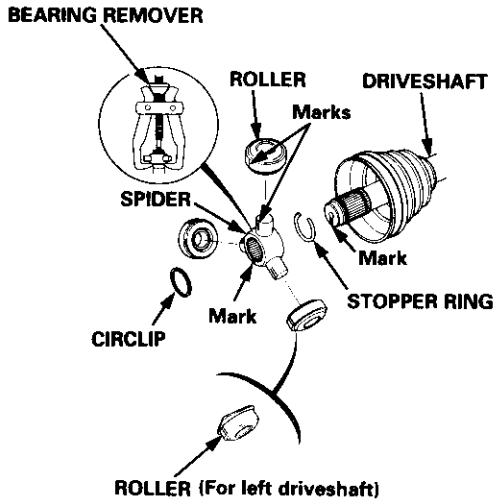

9. Wrap the splines on the driveshaft with vinyl tape to prevent damage to the boots and dynamic damper.

10. Remove the boot band and inboad boot.

    CAUTION: Take care not to damage the boot.

11. Remove the dynamic damper band and dynamic damper.

    CAUTION: Take care not to damage the dynamic damper.

12. Remove the boot bands and outboard boot, then remove the vinyl tape.

    CAUTION: Take care not to damage the boot.

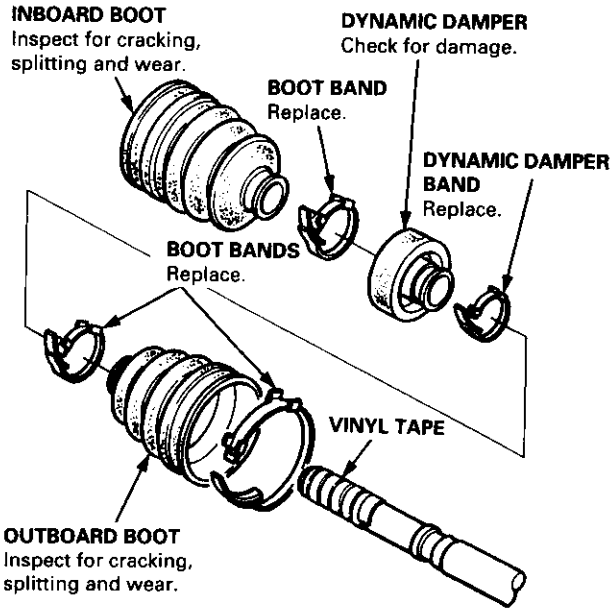

13. Inspect the outboard joint for faulty movement and wear. If any roughness or excess play is felt, replace the outboard joint.

14. Check the outboard ring for damage.

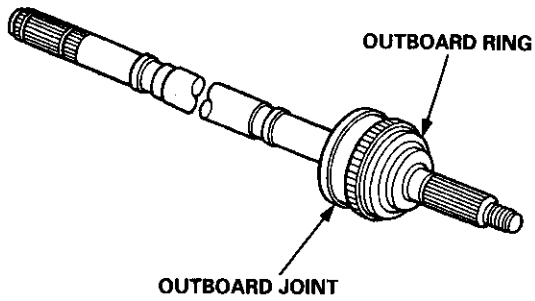

Reassembly

NOTE:

- Clean the disassembled parts with solvent, and dry them throughly with compressed air. Do not wash the rubber parts with solvent.
- GREASE : Thoroughly pack the inboard joint and both joint boots with the joint grease included in the new driveshaft set.

Grease quantity:

Inboard Joint	120 – 130 g (4.2 – 4.6 oz)
Outboard Joint	90 – 100 g (3.2 – 3.5 oz)

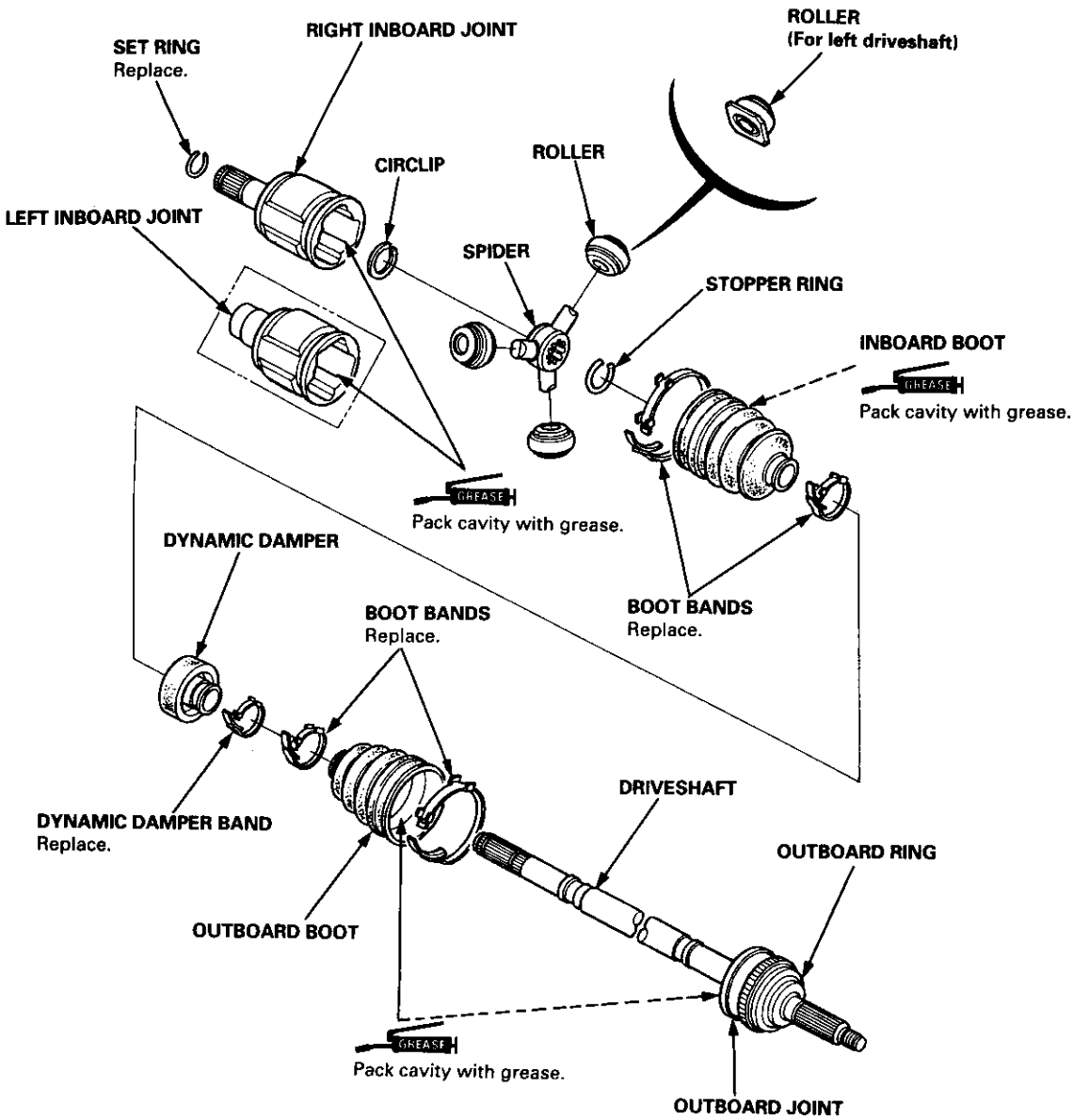

(cont'd)

Reassembly (cont'd)

1. Wrap the splines with vinyl tape to prevent damage to the boots and dynamic damper.

2. Install the outboard boot, dynamic damper and inboard boot to the driveshaft, then remove the vinyl tape.

   CAUTION: Take care not to damage the boots and dynamic damper.

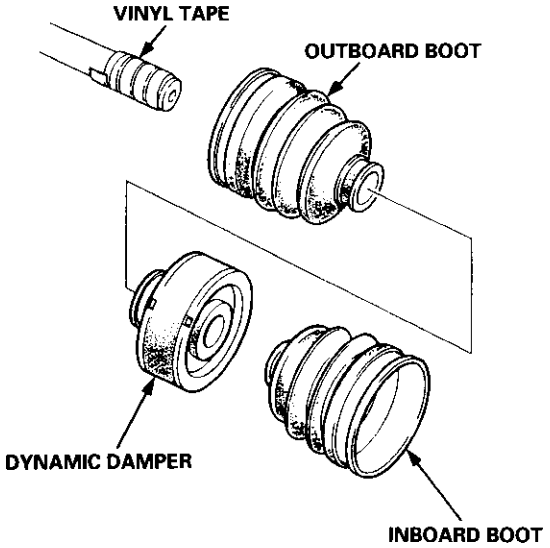

3. Install the stopper ring into the driveshaft groove.

   NOTE: Always rotate the stopper ring in its groove to be sure it is fully seated.

4. Install the spider on the driveshaft by aligning the marks on the spider and end of the driveshaft.

5. Fit the circlip into the driveshaft groove.

   NOTE: Always rotate the circlip in its groove to be sure it is fully seated.

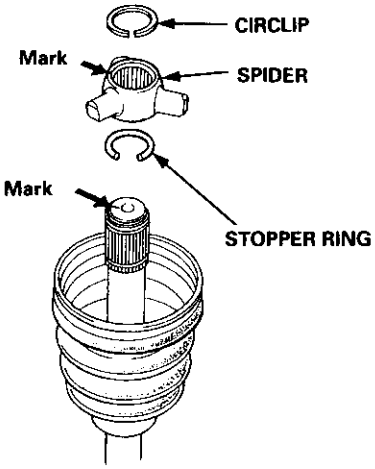

6. Pack the outboard joint with the joint grease included in the new driveshaft set.

   Grease quantity: 90 – 100 g (3.2 – 3.5 oz)

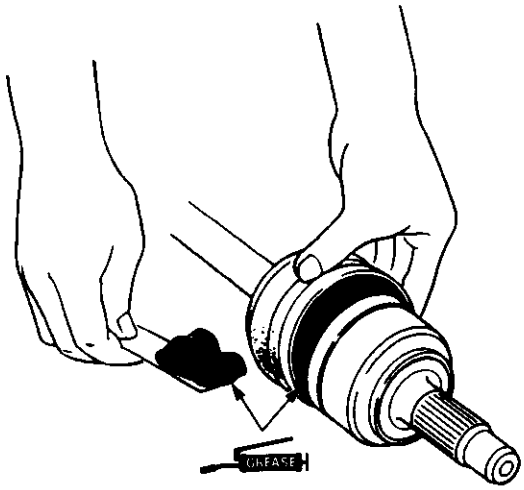

7. Fit the rollers to the spider with their high shoulders facing outward.

   NOTE:
   - Reinstall the rollers in their original positions on the spider by aligning the marks.
   - Hold the driveshaft pointed up to prevent the rollers from falling off.

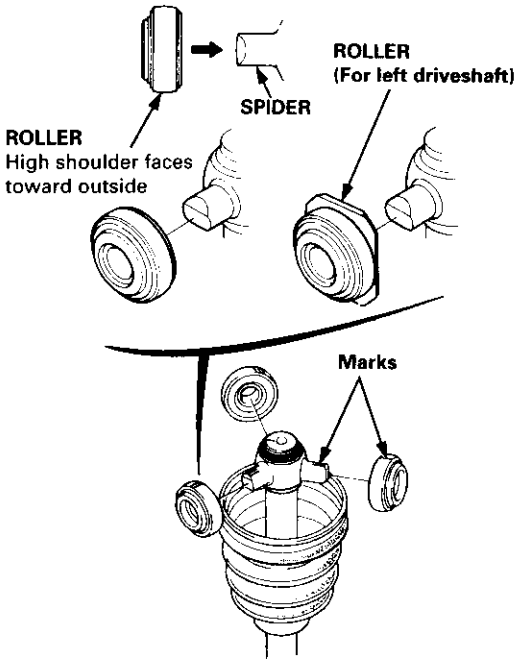

8. Pack the inboard joint with the joint grease included in the new driveshaft set.

   Grease quantity: 120 – 130 g (4.2 – 4.6 oz)

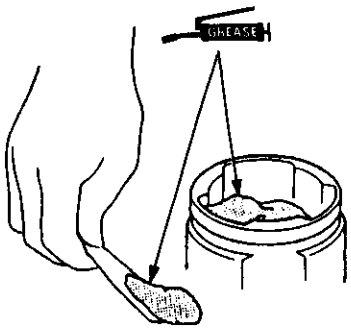

9. Fit the inboard joint onto the driveshaft.

   NOTE:
   - Reinstall the inboard joint onto the driveshaft by aligning the marks on the inboard joint and the rollers.
   - Hold the driveshaft so the inboard joint points up to prevent it from falling off.

Left driveshaft:
Align the holder direction of the rollers toward the slot of inboard joint as shown below.

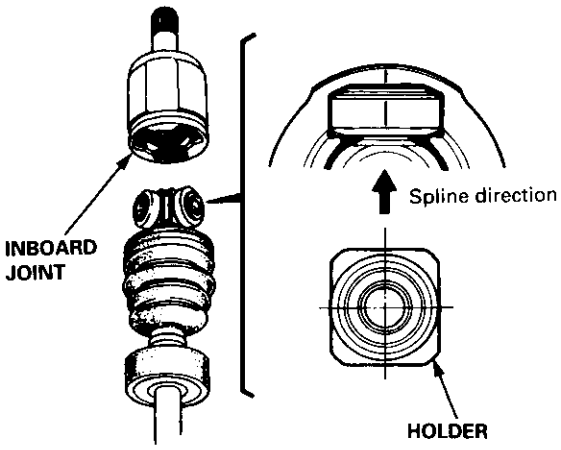

10. Adjust the length of the driveshafts to the figure below, then adjust the boots to halfway between full compression and full extension.

    NOTE: The ends of boots seat in the groove of the driveshaft and joint.

Left: 475 – 480 mm (18.7 – 18.9 in)

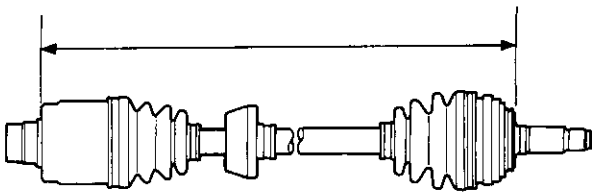

Right: 475 – 480 mm (18.7 – 18.9 in)

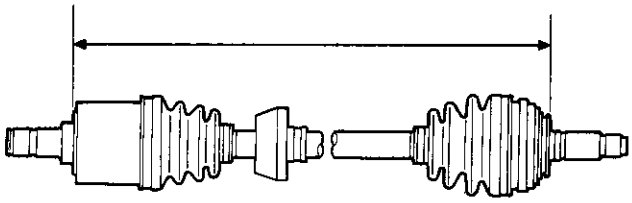

11. Install new boot bands on the boots, and bend both sets of locking tabs.

12. Lightly tap on the doubled-over portions to reduce their height.

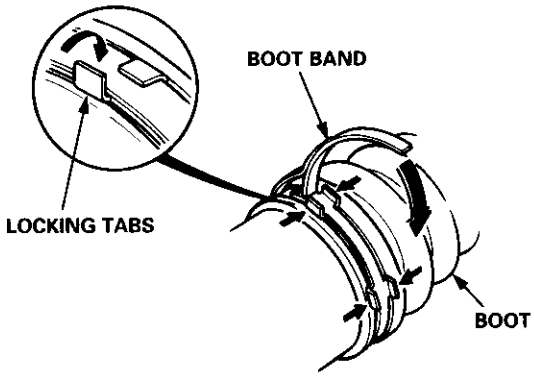

(cont'd)

Reassembly (cont'd)

13. Position the dynamic damper as shown below.
    - Install a new dynamic damper band, and bend down both sets of locking tabs.
    - Lightly tap on the doubled-over portion of the band to reduce its height.

    Left/Right: 29 ± 2 mm (1.1 ± 0.1 in)

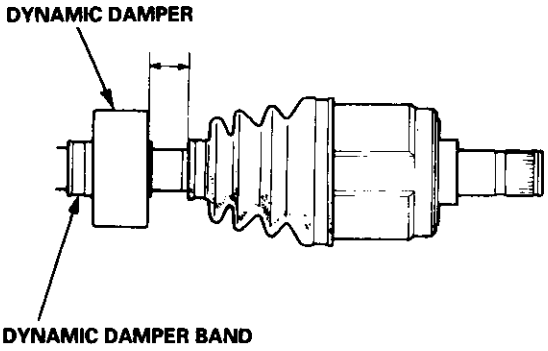

Installation

1. Install the outboard joint into the knuckle.

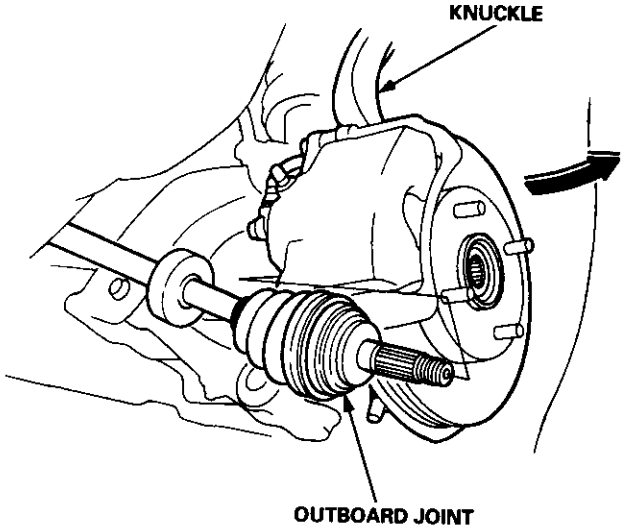

2. Apply 1.0 – 1.5 g (0.04 – 0.05 oz) of specified grease to the whole splined surface of the intermediate shaft.

   NOTE: After applying grease, remove the grease from the splined grooves at intervals of 2 – 3 splines and from the set ring groove so air can bleed from the inboard joint.

3. Install the new set ring onto the driveshaft or intermediate shaft groove.

   CAUTION: Always use a new set ring whenever the driveshaft is being installed.

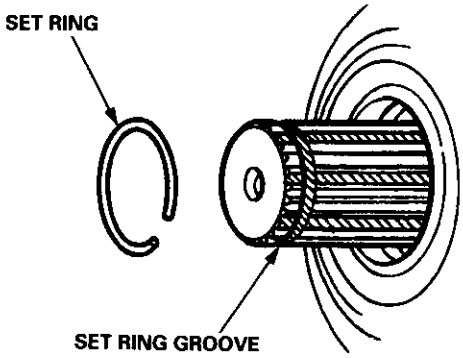

4. Insert the inboard end of the driveshaft into the differential or intermediate shaft until the set ring locks in the groove.

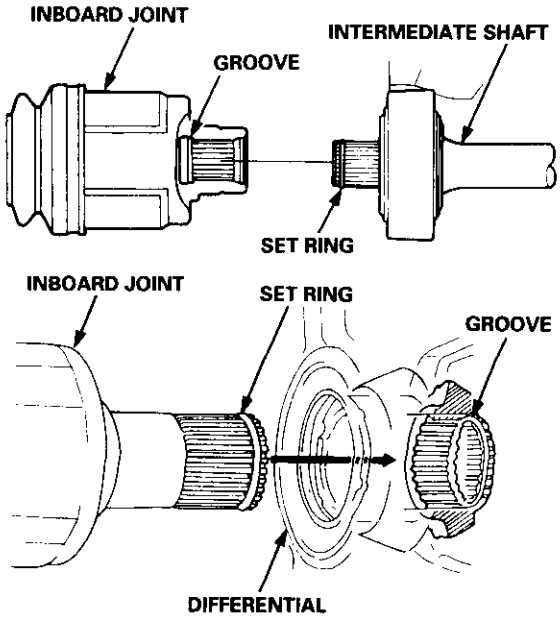

5. Install the damper fork over the driveshaft and onto the lower arm. Install the damper in the damper fork so the aligning tab is aligned with the slot in the damper fork.

6. Loosely install the self-locking bolt and the new self-locking nut.

   NOTE: The bolts and nut should be tightened with the vehicle's weight on the damper.

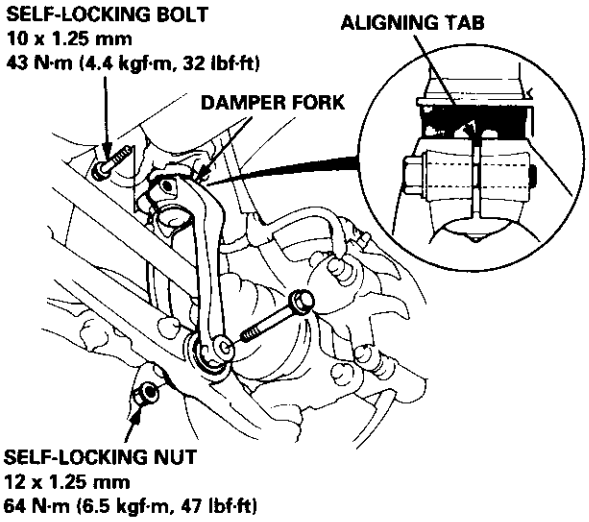

7. Install the knuckle on the lower arm, then tighten the castle nut and install a new cotter pin.

   NOTE: Wipe off the grease before tightening the nut at the ball joint.

   CAUTION:
   - **Be careful not to damage the ball joint boot.**
   - **Torque the castle nut to the lower torque specification, then tighten it only far enough to align the slot with the pin hole. Do not align the nut by loosening.**

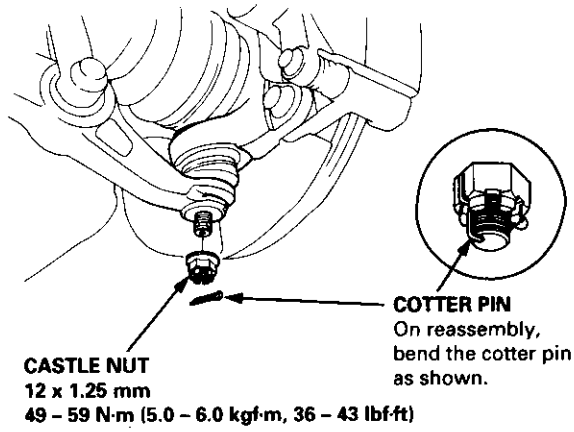

8. Install a new spindle nut, then tighten the nut.

9. Install the front wheel with the wheel nuts.

   NOTE: Before installing the wheel, clean the mating surfaces of the brake disc and the wheel.

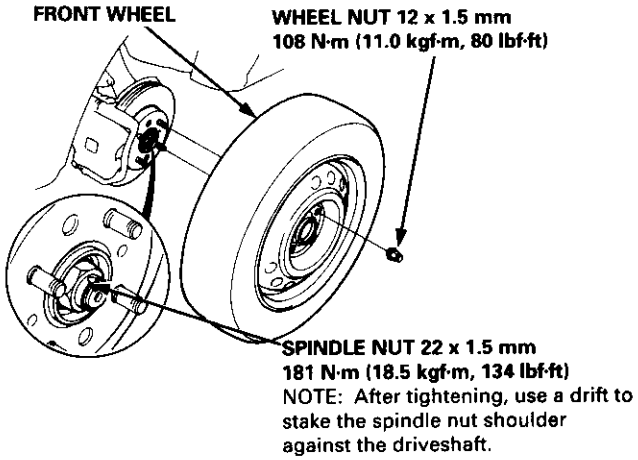

10. Tighten the self-locking bolt and the new self-locking nut with the vehicle's weight on the damper.

11. Refill the transmission with recommended oil or fluid (see section 13 or 14).

12. Check the front wheel alignment and adjust if necessary (see page 18-4).

Intermediate shaft

Removal

1. Drain the transmission oil or fluid (see section 13 or 14).
2. Remove the left driveshaft (see page 16-3).
3. Remove the three dowel bolts.

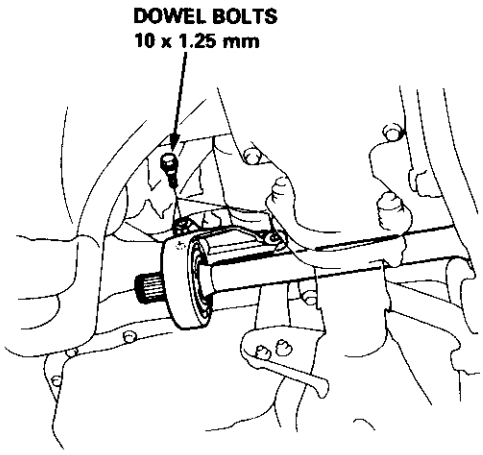

4. Remove the intermediate shaft from the differential.

CAUTION: Hold the intermediate shaft horizontal until it is clear of the differential to prevent damage to the differential oil seal.

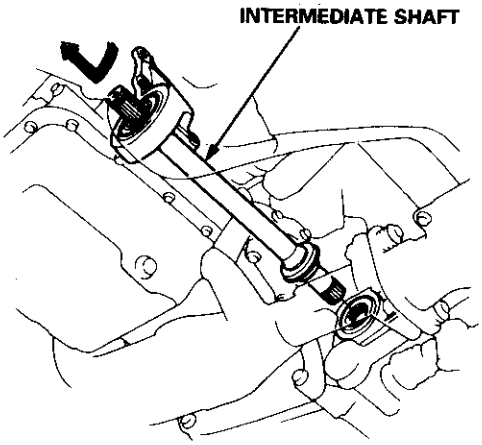

Disassembly

NOTE: Be careful not to damage the metal rings on the intermediate shaft during disassembly.

1. Remove the set ring.
2. Remove the intermediate shaft outer seal from the bearing support.
3. Remove the external circlip.

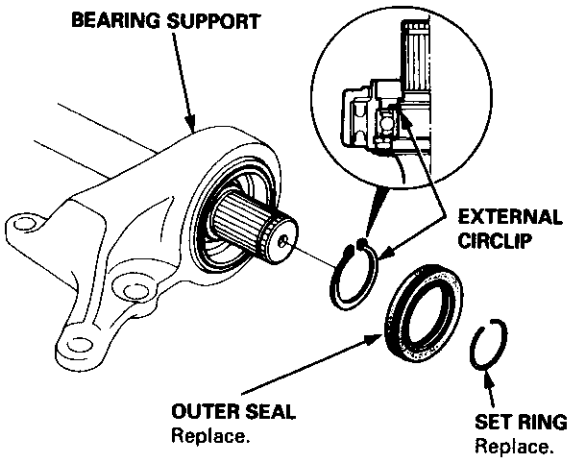

Disassembly

4. Press the intermediate shaft out of the shaft bearing using the special tools and a press as shown.

5. Remove the internal circlip.

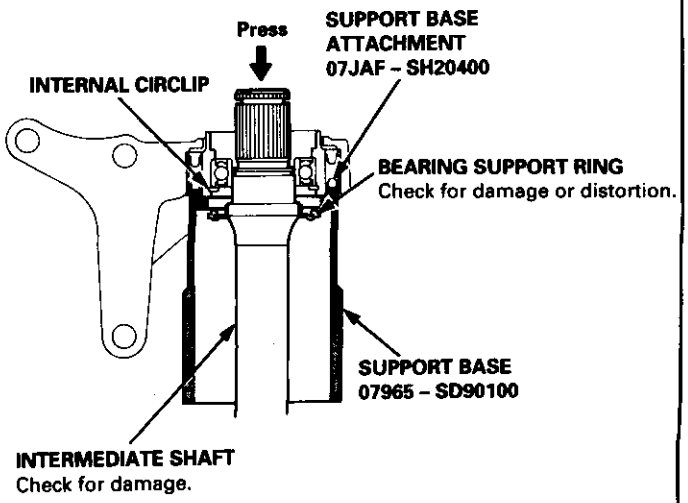

6. Press the intermediate shaft bearing out of the bearing support using the special tools and a press as shown.

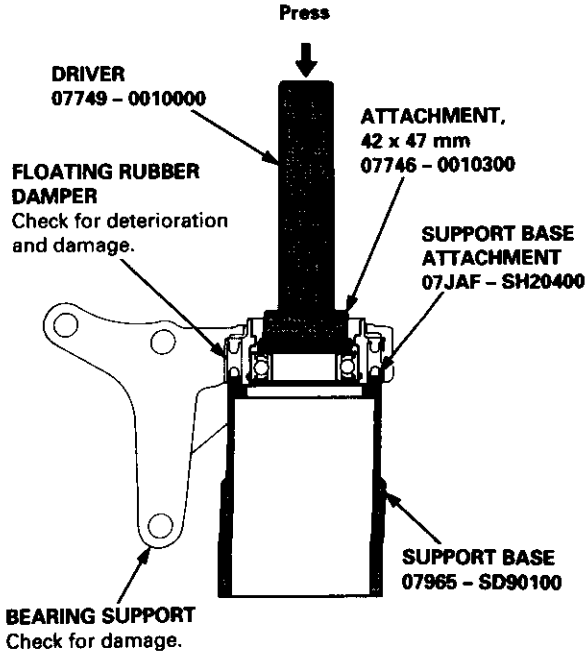

Reassembly

NOTE:
- Clean the disassembled parts with solvent, and dry them thoroughly with compressed air. Do not wash the rubber parts with solvent.
- Be careful not to damage the metal rings on the intermediate shaft during reassembly.

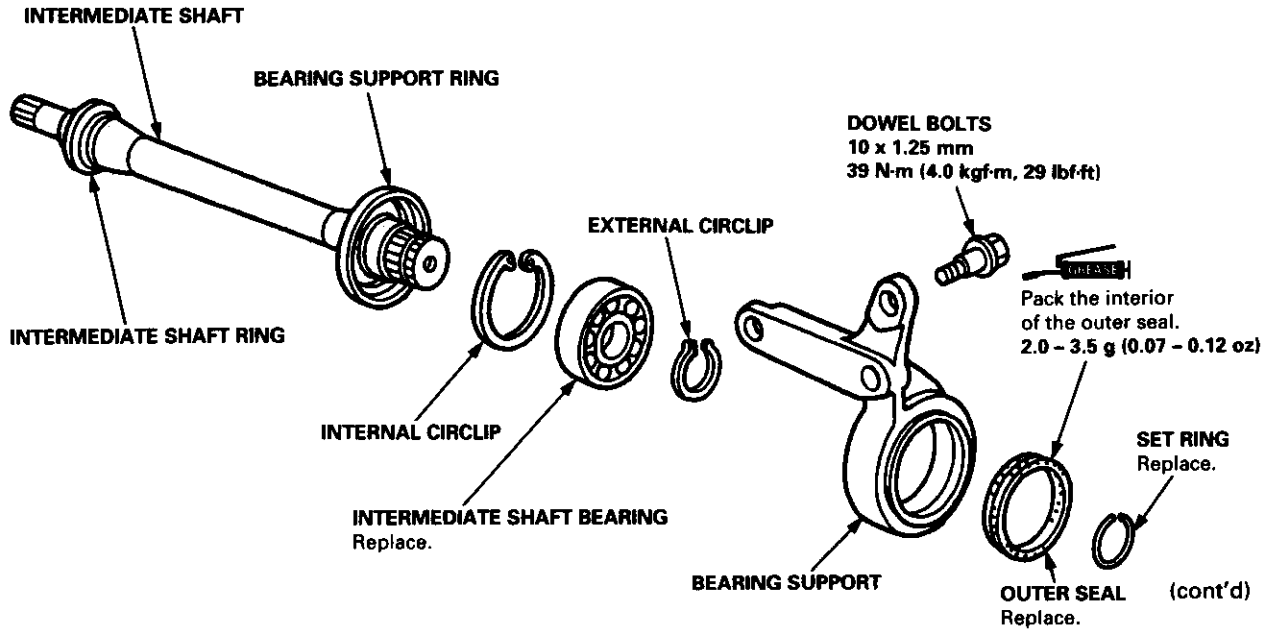

(cont'd)

Reassembly (cont'd)

1. Press the intermediate shaft bearing into the bearing support using the special tools and a press as shown.

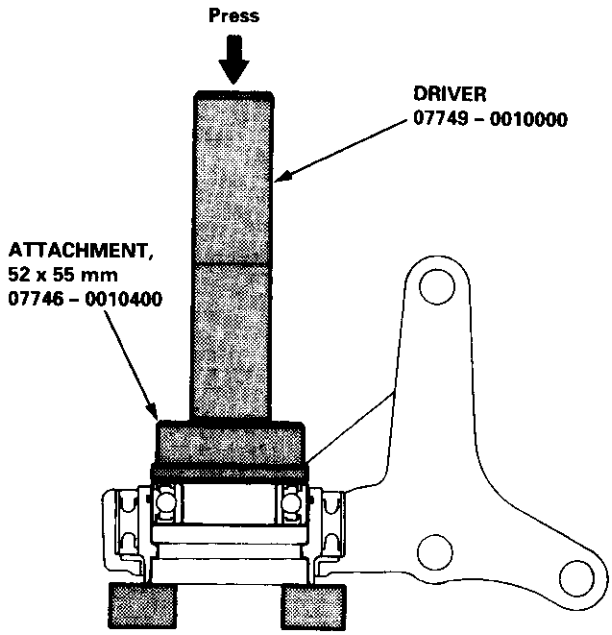

2. Seat the internal circlip in the groove of the bearing support.

   CAUTION: Install the circlip with the tapered end facing out.

3. Press the intermediate shaft into the shaft bearing using the special tools and a press.

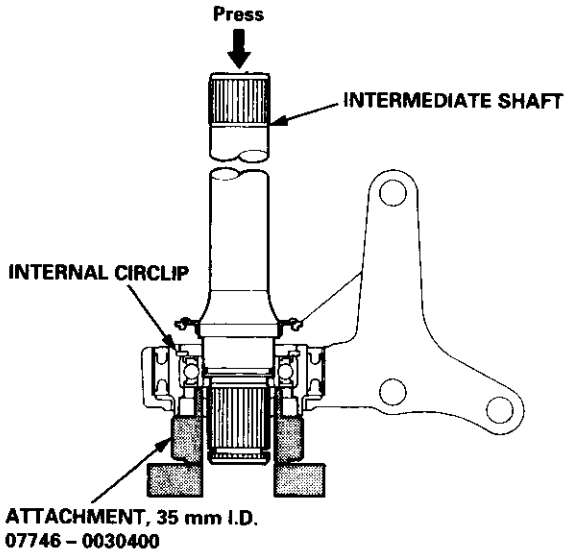

4. Seat the external circlip in the groove of the intermediate shaft.

   NOTE: Install the circlip with the tapered end facing out.

5. Install the outer seal into the bearing support using the special tools as shown.

   NOTE: Install the seal flush with the bearing support.

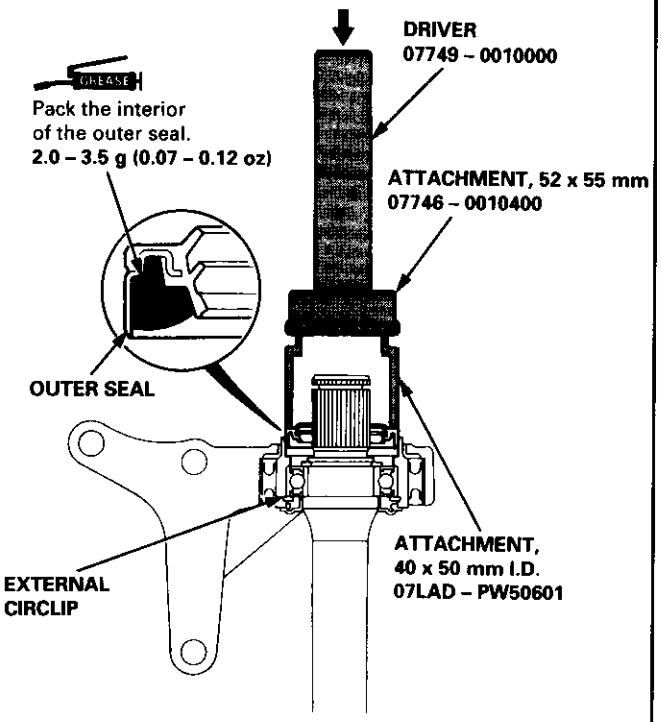

6. Install the new set ring in the intermediate shaft groove.

Installation

1. Insert the intermediate shaft assembly into the differential.

   CAUTION: Hold the intermediate shaft horizontal to prevent damage to the differential oil seal.

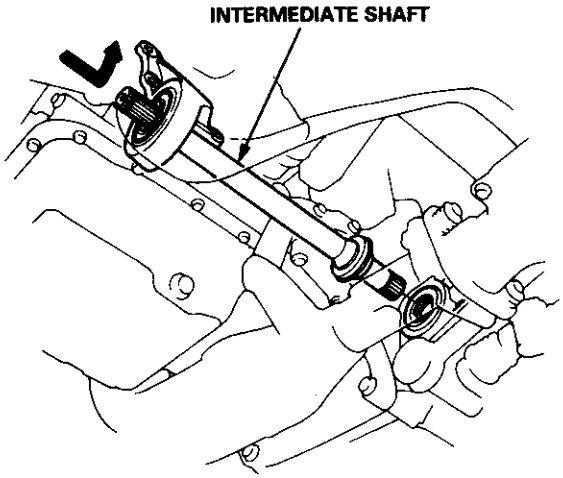

2. Install the three dowel bolts, then tighten them.

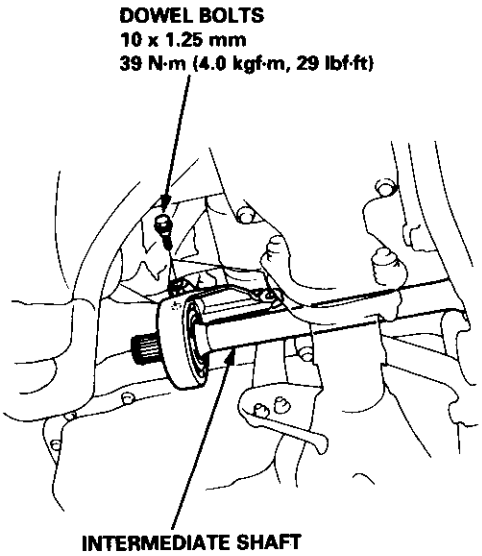

Steering

Special Tools 17-2
Component Location
  Index 17-3
System Description
  Fluid Flow Diagram 17-4
  Steering Pump 17-5
  Steering Gearbox 17-7
Troubleshooting
  General Troubleshooting 17-10
  Noise and Vibration 17-14
  Fluid Leaks 17-16
Inspection and Adjustment
  Steering Operation 17-18
  Power Assist Check
    with Car Parked 17-18
  Steering Linkage and Gearbox 17-19
  Pump Belt 17-20
  Rack Guide Adjustment 17-21
  Fluid Replacement 17-21
  Pump Pressure Check 17-22
  Fluid Leakage Inspection 17-23
*Steering Wheel
  Removal 17-24
  Disassembly/Reassembly 17-25
  Installation 17-26
*Steering Column
  Removal 17-28
  Inspection 17-30
  Installation 17-31
Power Steering Hoses, Pipes
  Replacement 17-34
Power Steering Pump
  Removal 17-35
  Disassembly 17-35
  Reassembly 17-40
  Installation 17-44
Steering Gearbox
  Removal 17-45
  Disassembly 17-48
  Reassembly 17-53
  Installation 17-63
  Ball Joint Boot Replacement 17-65

SUPPLEMENTAL RESTRAINT SYSTEM (SRS)

The Integra SRS includes a driver's airbag, located in the steering wheel hub. In addition, all models except the RS model for Canada have a front passenger's airbag located in the dashboard above the glove box. Information necessary to safely service the SRS is included in this Service Manual. Items marked with an asterisk (*) on the contents page include, or are located near, SRS components. Servicing, disassembling or replacing these items will require special precautions and tools, and should therefore be done by an authorized Acura dealer.

⚠ WARNING

- **To avoid rendering the SRS inoperative, which could lead to personal injury or death in the event of a severe frontal collision, all SRS service work must be performed by an authorized Acura dealer.**
- **Improper service procedures, including incorrect removal and installation of the SRS, could lead to personal injury caused by unintentional activation of the airbags.**
- **All SRS electrical wiring harnesses are covered with yellow insulation. Related components are located in the steering column, front console, dashboard, and dashboard lower panel, and in the dashboard above the glove box. Do not use electrical test equipment on these circuits.**

NOTE: The original radio has a coded theft protection circuit. Be sure to get the customer's code number before
– disconnecting the battery.
– removing the No. 32 (7.5 A) fuse from the under-hood fuse/relay box.
– removing the radio.
After service, reconnect power to the radio and turn it on. When the word "CODE" is displayed, enter the customer's 5-digit code to restore radio operation.

Special Tools

Ref. No.	Tool Number	Description	Q'ty	Page Reference
①	07GAF – PH70100	Pilot Collar	1	17-52
②	07GAF – SD40700	Hub Dis/Assembly Base	1	17-39
③	07GAG – SD40100	Piston Seal Ring Guide	1	17-57
④	07GAG – SD40200	Piston Seal Ring Sizing Tool	1	17-57
⑤	07GAG – SD40400	Cylinder End Seal Guide	1	17-59
⑥	07JGG – 001010A	Belt Tension Gauge	1	17-20
⑦	07MAC – SL00200	Ball Joint Remover, 28 mm	1	17-45
⑧	07MAG – SL00100	Ball Joint Boot Clip Guide	1	17-55, 65
⑨	07NAD – SR30200	Cylinder End Seal Remover Attachment	1	17-50
⑩	07NAG – SR30900	Valve Seal Ring Sizing Tool	1	17-54
⑪	07NAK – SR3011A	P/S Joint Adapter (Pump)	1	17-22
⑫	07NAK – SR3012A	P/S Joint Adapter (Hose)	1	17-22
⑬	07406 – 0010001	P/S Pressure Gauge	1	17-22
⑬-1	07406 – 0010300	Pressure Control Valve	1	17-22
⑬-2	07405 – 0010400	Pressure Gauge	1	17-22
⑭	07725 – 0030000	Universal Holder	1	17-35, 53
⑮	07746 – 0010100	Attachment, 32 x 35 mm	1	17-55, 56
⑯	07746 – 0010200	Attachment, 37 x 40 mm	1	17-41
⑰	00749 – 0010000	Driver	1	17-55
⑱	07916 – SA50001	Locknut Wrench, 40 mm	1	17-21
⑲	07947 – 6340500	Driver Attachment	1	17-41
⑳	07974 – 6890801	Cylinder End Seal Slider	1	17-57, 58
㉑	07974 – SA50200	Sleeve Seal Ring Sizing Tool	1	17-55

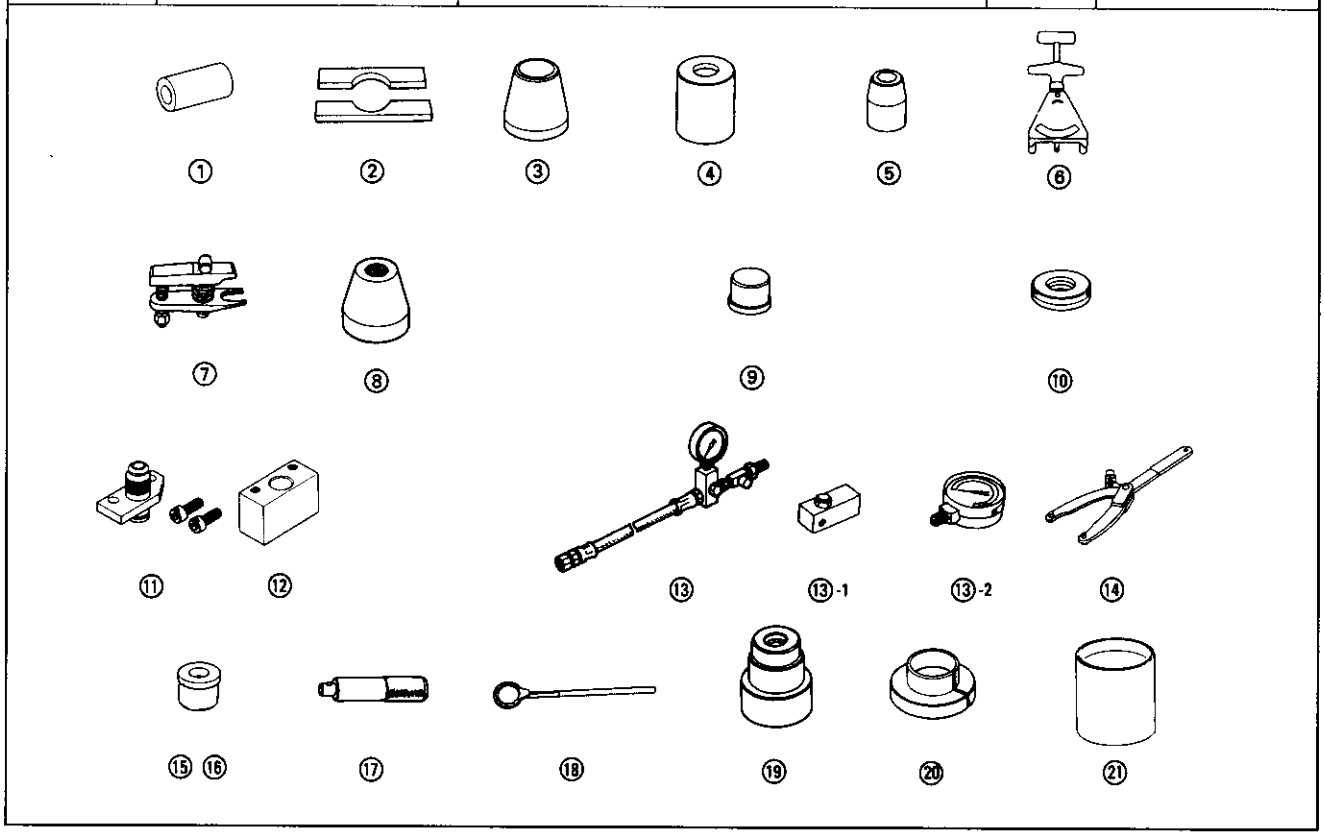

Component Location

Index

Power Steering:

NOTE:
- If an intact airbag assembly has been removed from a scrapped car or has been found defective or damaged during transit, storage or service, it should be deployed (see section 23).
- Before removing the gearbox, remove the ignition key to keep the steering shaft from turning.
- After installing the gearbox, check the wheel alignment and adjust if necessary.

CAUTION:
- **All SRS electrical wiring harnesses are covered with yellow insulation.**
- **Before disconnecting any part of the SRS wire harness, connect the short connector(s).**
- **Replace the entire affected SRS harness assembly if it has an open circuit or damaged wiring.**

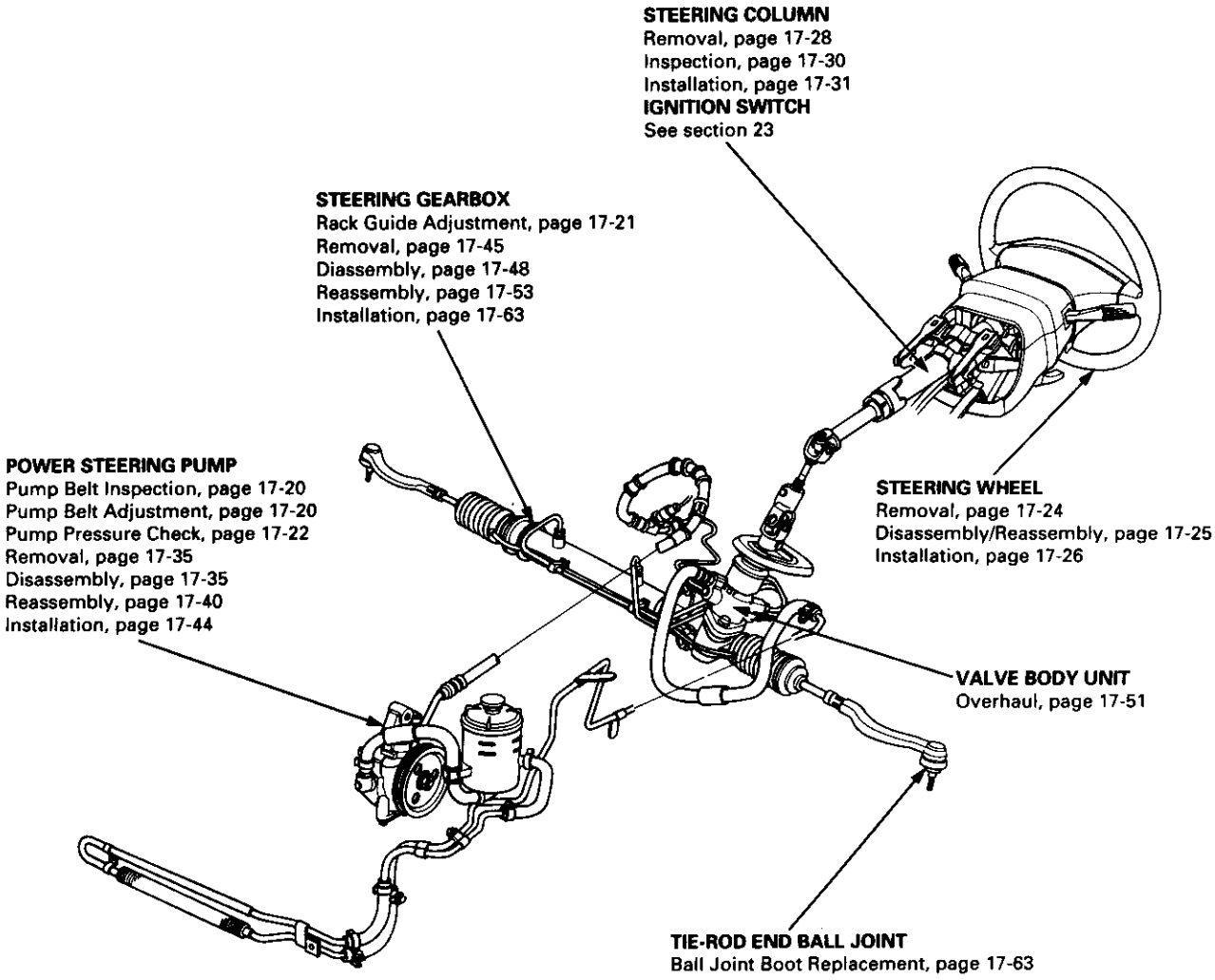

System Description

Fluid Flow Diagram

The system is a compact rotary-valve-type power steering, connected to the steering gearbox. The fluid pressure is provided by a vane-type pump which is driven by the engine crank pulley. The amount of fluid and pressure is regulated by the flow control valve built into the pump. The fluid pressure from the pump is delivered to the valve unit around the pinion of the steering gearbox. The valve inside the valve unit controls the hydraulic pressure and changes the direction of the flow. The fluid then flows to the power cylinder, where rack thrust is generated. Fluid returning from the power cylinder flows back to the reservoir, where the fluid is "filtered" and supplied to the pump again.

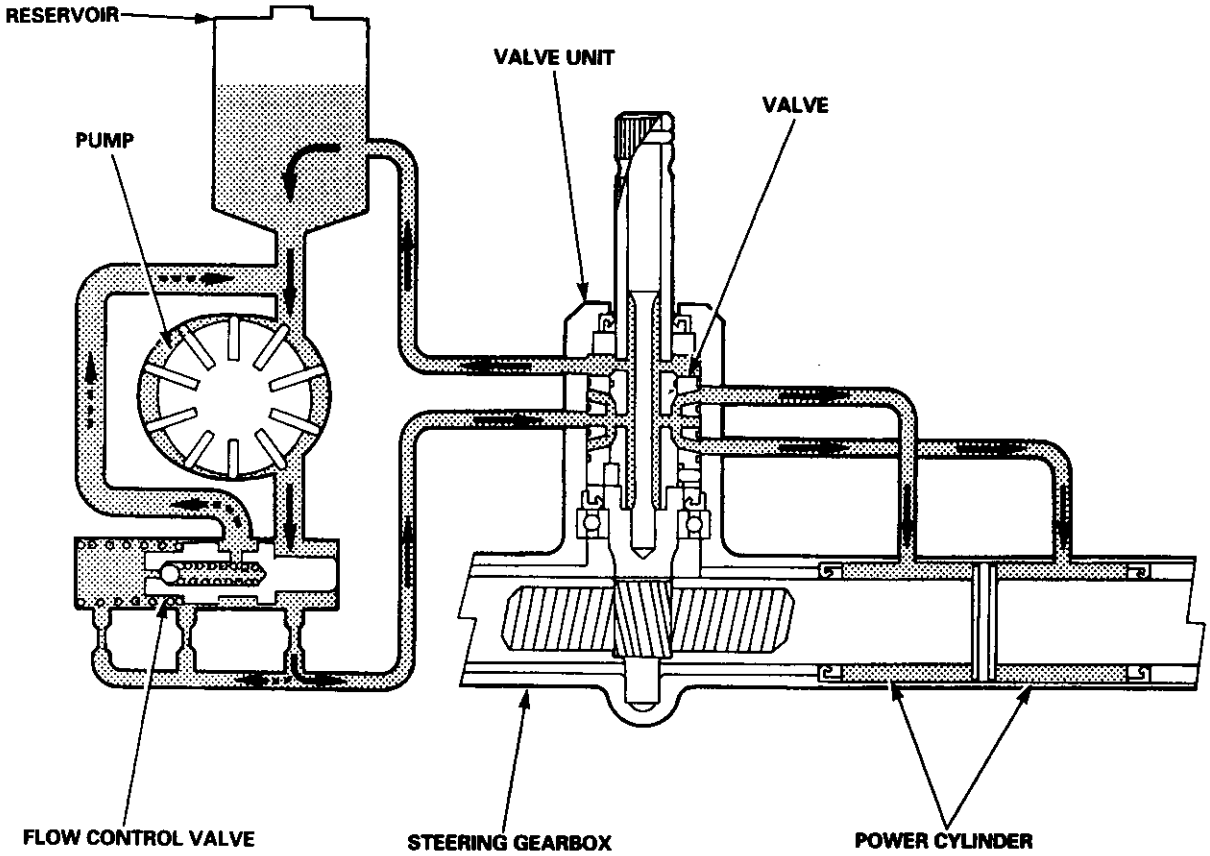

Steering Pump

Construction

The pump is a vane-type incorporating a flow control valve (with an integrated relief valve) and is driven by a V-belt from the crank pulley. The pump features 10 vanes. Each vane performs two intake/discharge operations for every rotation of the rotor. This means that the hydraulic fluid pressure pulse becomes extremely small during discharge.

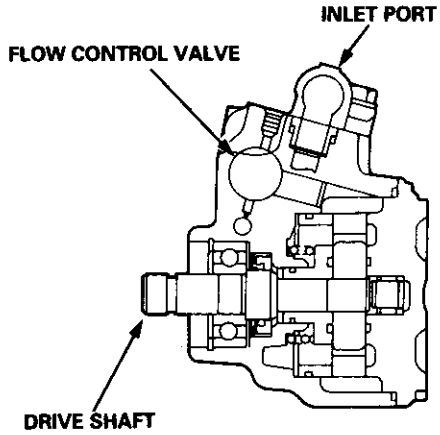

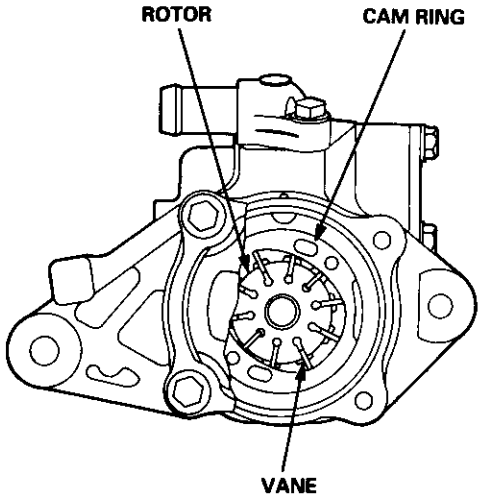

Operation

The belt-driven pulley rotates the rotor through the drive shaft. As the rotor rotates, the hydraulic pressure is applied to the vane chamber of the rotor and the vanes will rotate while being pushed onto the inner circumference of the cam ring. The inner circumference of the cam ring has an extended portion with respect to the center of the shaft, so the rollers move downward in the axial direction as the carrier rotates. As a result of this roller movement, the internal volume of the vane chamber will change, resulting in fluid intake and discharge.

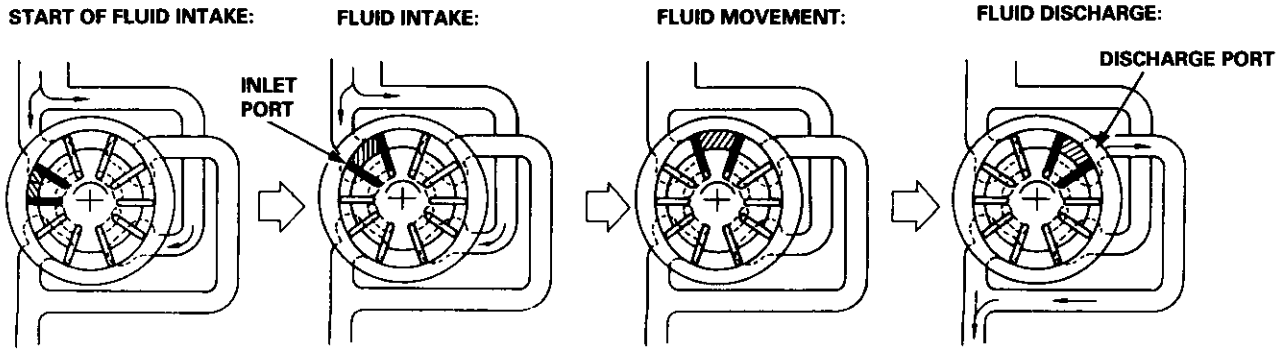

The vanes are pushed onto the inner circumference of the cam ring.

The volume of the vane chamber increases so that fluid is sucked in.

The sucked-in fluid moves toward the discharge port.

As the vanes return to the their original position on the inner side, the volume of the vane chamber decreases so the fluid is discharged from the discharge port.

(cont'd)

Steering Pump (cont'd)

Flow Control

The flow control valve in the pump performs the following steps ① through ④ to control the flow of fluid, i.e. to increase the discharge volume when engine speed is low and to decrease it when the engine speed increases. The assistance thrust of the steering gearbox changes in compliance with the change in the discharge volume.

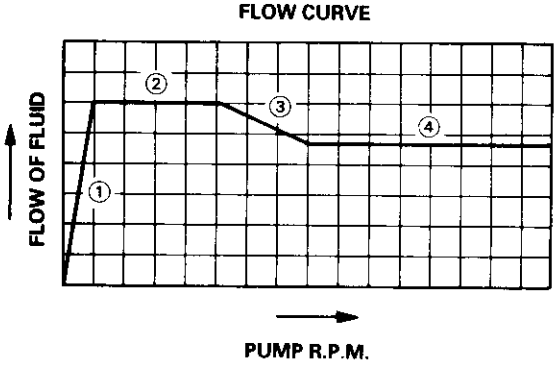

① When the engine starts, fluid discharged from the discharge port starts to run through the metering orifice in the pump. The discharge volume increases as the engine speed increases.

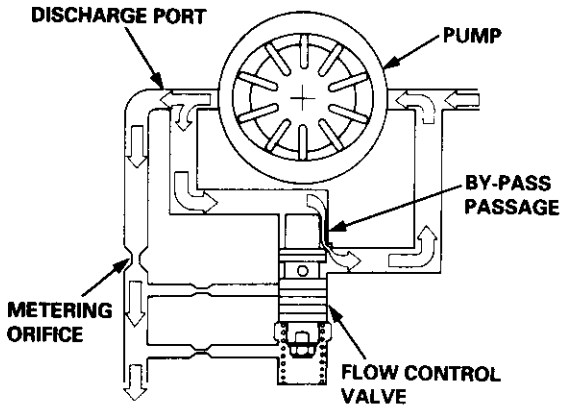

② As the flow has already been regulated by the metering orifice when the engine speed is at or near the idle speed, a constant and regulated amount of fluid is discharged until the engine speed reaches the middle speed range. As the engine speed increases, the pressure difference between the ends of the metering orifice increases. A pressure difference is created between the top and bottom ends of the flow control valve, too, pushing the flow control valve to open the by-pass passage. This allows the excess fluid to return to the inlet port preventing pressure at the discharge port from rising excessively.

③ As the engine speed continues to increase, the flow control valve is pushed back further. When the engine speed reaches a given speed, the return passage outside the metering orifice is connected to the inlet port, and the opening to the inlet port widens in proportion to the increase in engine speed. This makes part of the fluid regulated by the metering orifice return to the inlet port of the pump; there by discharged fluid from the pump is decreased slowly by this amount.

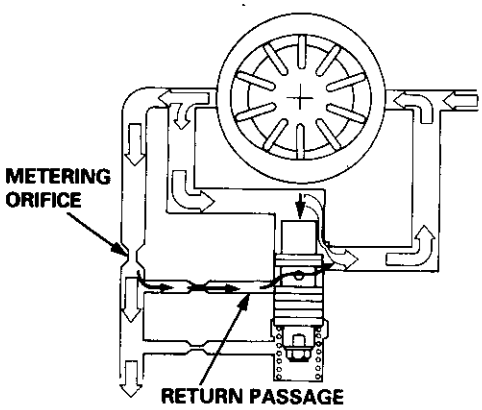

④ The orifice in the return passage regulates and maintains the flow of fluid discharged from the pump at a given level until the engine speed reaches the high speed range.

Pressure Relief

Pressure outside of the metering orifice is directed to the bottom of the flow control valve. When the pressure builds up, the relief valve in the flow control valve opens to relieve the pressure. As the flow control valve is pushed back by the pressure difference this time, the flow of fluid in the bypass passage increases, controlling the pressure outside the metering orifice. The above operations are repeated to provide constant discharge pressure from the pump.

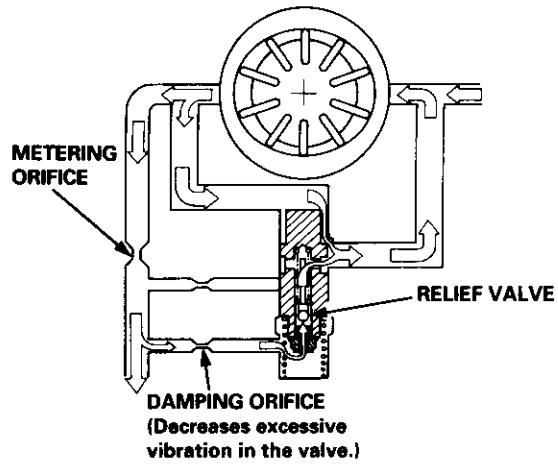

(cont'd)

System Description

Steering Gearbox

The rack-and-pinion type steering gearbox has a valve unit incorporated with the pinion to control the steering fluid pressure. Steering fluid from the pump is regulated by a rotary valve in the valve unit and is sent through the cylinder pipe to the power cylinder, where hydraulic pressure is applied. The steering fluid in the other side of the power cylinder returns through the cylinder pipe and valve unit to the reservoir.

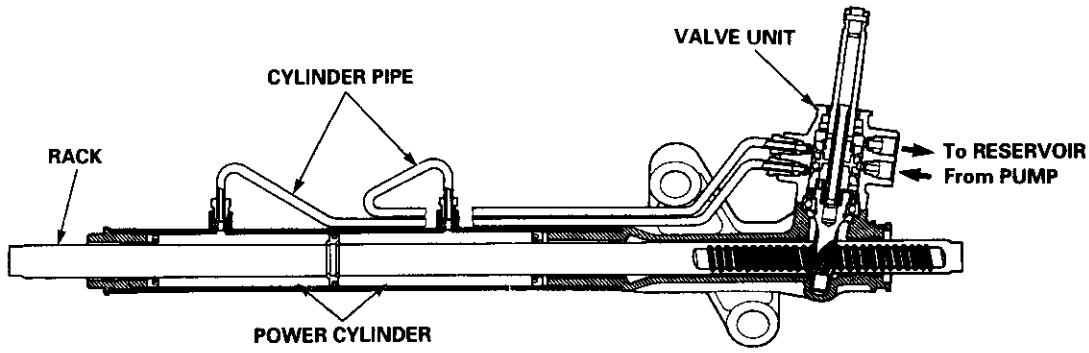

Valve Unit

Inside the valve unit is the valve, which is coaxial with the pinion shaft, and controls the steering fluid pressure. The valve housing is connected with the fluid pipe from the pump, return pipe to the pump, and the two cylinder pipes from the respective power cylinder.
The pinion shaft is double – structured with the input shaft connected to the pinion gear, both of which are interconnected with the torsion bar.
The pin inserted in the valve and the pinion shaft groove engage; this allows the pinion shaft to rotate together with the valve.
Because of this construction, the difference in angle in the circumferential direction between the input shaft and the valve becomes larger according to the torsional strength of the pinion or steering resistance. However, maximum torsion between the shafts is regulated by the engaged splines of the shafts at the pin engagement section to hold the torsion bar within the set value.
This allows the steering system to function as an ordinary rack-and-pinion type steering if the steering fluid is not pressurized because of a faulty pump.

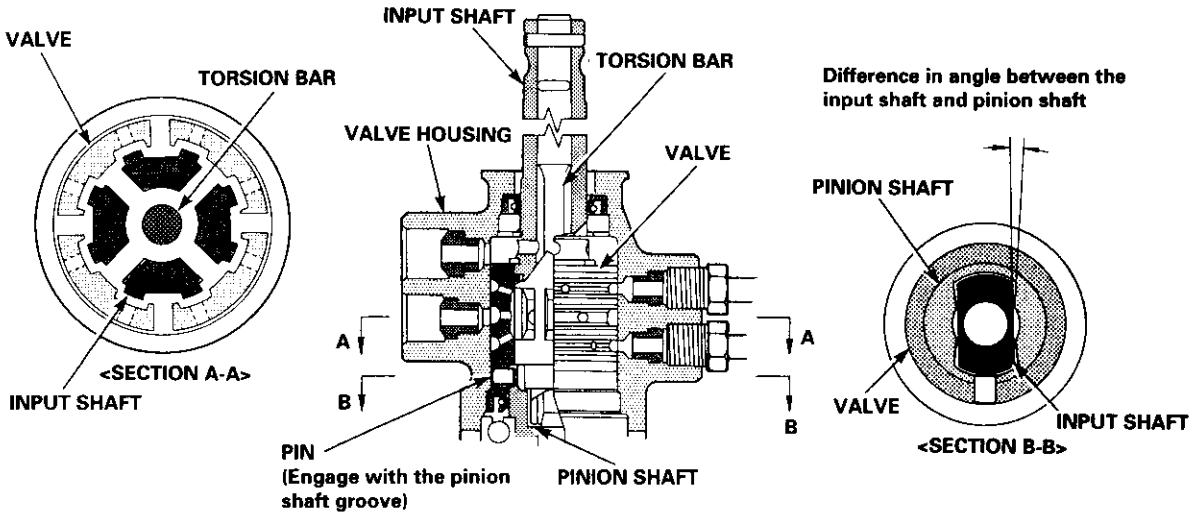

Pressure Control

Low assist at higher speeds:
When steering resistance is low, such as when driving at high speeds, or when driving straight ahead, the input shaft is near or in the neutral position, so there is little or no flow to any of the power cylinder orifices. Most of the feed pressure from the pump is bypassed to the reservoir. Because of this, the pressure stays the same in both sides of the power cylinder, resulting in low or no assist.

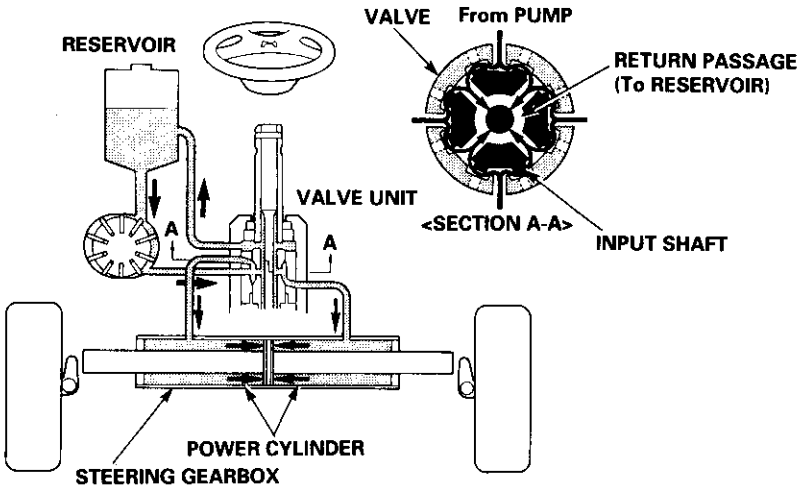

High assist at lower speeds:
When steering resistance is high, such as when driving at low speed, or when turning the wheel with the car stopped, the difference in angle created between the input shaft and the valve opens the fluid passage on one side, and closes the fluid passage on the other side, at each pair of orifices. The fluid pressure increases in the side of the power cylinder fed by the larger fluid passage. This increased pressure pushes on the rack piston, allowing the steering wheel to be turned with light effort. On the other side of the power cylinder, the return passage opens allowing the steering fluid to return through the input shaft to the reservoir. The fluid passages to the power cylinder automatically change in size, increasing as the steering resistance increases. In other words, the passages become larger and power assist increases when the steering effort would normally be high, (for example, when parking or making low speed turns), and the passages become smaller and power assist decreases when the steering effort would normally be low, (for example, when driving at high speeds or straight ahead).

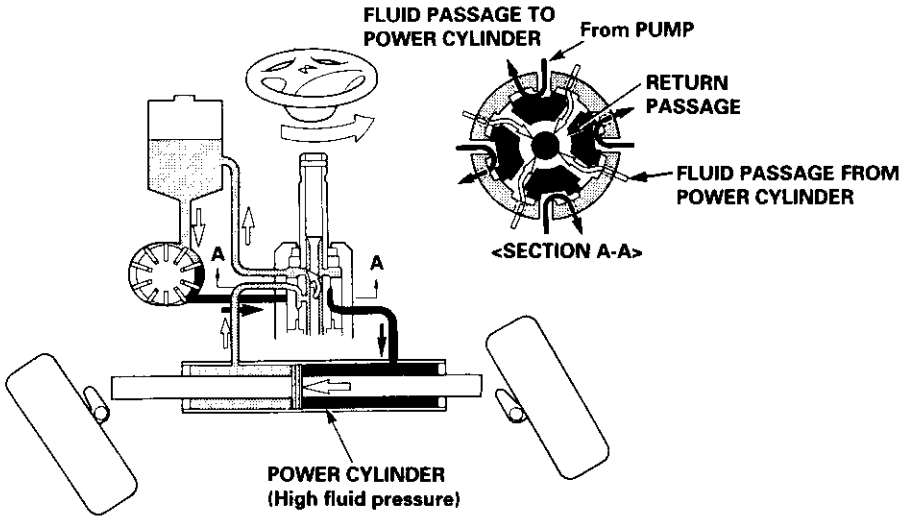

General Troubleshooting

Check the following before you begin:

- Has the suspension been modified in a way that would affect steering?
- Are tire sizes and air pressure correct?
- Is the steering wheel original equipment or equivalent?
- Is the power steering pump belt properly adjusted?
- Is steering fluid reservoir filled to proper level?
- Is the engine idle speed correct and steady?

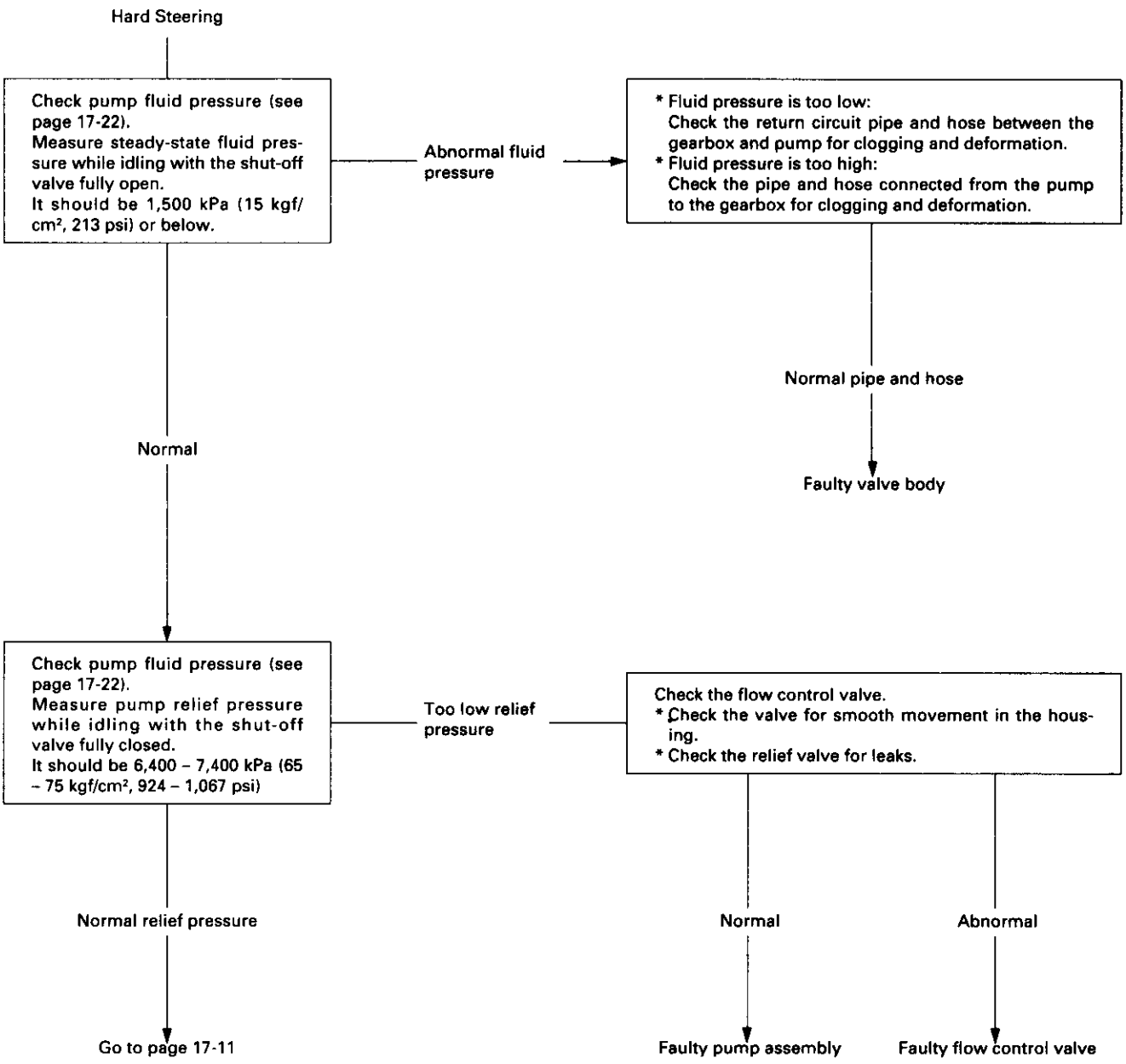

Check force required to turn the wheel (see page 17-18).
Start the engine and measure force required to turn the wheel to the right and left. Difference of the force required to turn the wheel to the right and to the left should be 5 N (0.5 kgf, 1 lbf) or below.

- Abnormal → Check the cylinder pipe A and B for deformation.
  - Not deformed → Faulty valve unit
  - Deformed → Faulty cylinder pipe
- Normal ↓

Check pump fluid pressure (see page 17-22).
Turn the steering wheel fully to the right and left while idling with the shut-off valve fully open, and measure the fluid pressure. It should be 6,400 – 7,400 kPa (65 – 75 kgf/cm², 924 – 1,067 psi).

- Abnormal → Faulty gearbox
- Normal ↓

Check the gearbox.
Remove the gearbox and measure the pinion torque.
The torque should be;
* 0.7 – 1.2 N·m (7 – 12 kgf·cm, 6 – 10 lbf·in) with the steering rack in the straight driving position.

- Abnormal → Check the other parts than the gearbox-related parts for proper rotation.
  * Improper rotation of the steering column-related part(s)
  * Faulty steering joint
  * Faulty rack end/tie-rod end ball joints
  * Interference in the steering system
- Normal ↓

Adjust the rack guide (see page 17-21).
Adjust the rack guide and recheck the pinion torque.

- Normal → Improperly adjusted rack guide
- Abnormal ↓ Faulty gearbox

(cont'd)

General Troubleshooting (cont'd)

Assist (excessively light steering) at high speed.

- Check the rack guide proper adjustment (see page 17-21).
- If the problem is not corrected by adjusting the rack guide, adjust the front wheel alignment (see section 18).

Shock or vibration when wheel is turned to full lock.

- Check the rack guide for proper adjustment (see page 17-21).
- Rack guide was backed off excessively.
- Adjust.
- If the problem is not corrected by adjusting the rack guide, replace the gearbox.
- Rack guide is adjusted properly.
- Check the belt for slip and adjust as necessary (see page 17-20).

Wheel will not return smoothly.

- Check the cylinder pipe A and B for deformation.
- If either one or both of the cylinder pipe A and B is/are deformed, replace.
- If the cylinder pipe A and B are normal, remove the gearbox from the frame and measure the pinion torque on the gearbox.
- It should be 0.7 – 1.2 N·m (7 – 12 kgf·cm, 6 – 10 lbf·in) or below with the steering rack in the straight ahead driving position.
- If the measurements are out of specifications, adjust the rack guide.
- If the problem is not corrected by adjusting the rack guide, replace the gearbox.

Uneven or rough steering.	Improperly adjusted rack guide.	Adjust rack guide (see page 17-21). If the problem is not corrected by adjusting the rack guide, replace the gearbox.
	Belt slipping on pulley.	Adjust belt tension. Replace belt, if necessary (see page 17-20).
	Idle speed low or erratic.	If the engine stalls when wheel is turned while car is stopped or moving at low speed, adjust idle speed (see section 11).
	Air in reservoir, or check power steering fluid level.	Check power steering fluid level. If level is excessively low, check for leaks in the system. Add fluid to the specified level. If fluid level is OK, check O-rings and seals on both ends of the pump inlet hose, and the oil pump housing mating surfaces for suction leaks. Replace parts as necessary.
Steering kicks back during wide turns.	Pump belt slipping on pulley (pump stops momentarily).	Adjust belt tension (see page 17-20) or replace belt.
	Set the power steering pressure gauge. Close the shut-off valve fully and measure the pump pressure (see page 17-22).	Check if pump pressure is within the range 6,400 – 7,400 kPa (65 – 75 kgf/cm², 924 – 1,067 psi) and the gauge needle travel is ±500 kPa (±5 kgf/cm², ±71 psi) or less. Check the flow control valve if the needle travel exceeds ±500 kPa (±5 kgf/cm², ±71 psi). If the flow control valve is normal, replace the pump as an assembly.

Noise and Vibration

NOTE: Pump noise in first 2 – 3 minutes after starting in cold weather (–20°C, –4°F or colder) is normal.

Humming	Humming due to pulsation of fluid is normal, particularly when wheel is turned with car stopped.	
	If equipped with automatic transmission, the hum could be torque converter or pump noise.	Confirm by temporarily removing pump belt.
	High pressure line touching the frame.	Reposition the line.
Squeaking	Pinion shaft grommet not lubricated.	Grease it.
	Right cylinder end seal squeak	Grease it.
Rattle or chattering	Loose steering shaft connector, tie-rod, or ball joint.	Check and tighten, or replace parts as necessary.
	Column shaft wobbling.	Replace column assembly.
	Check the rack guide for proper adjustment (see page 17-21).	Adjust, if necessary.
	Rattling sound and feeling when turning the steering wheel right and left with the engine OFF is a sound when the valve unit contacts the stopper. This is normal.	
	Striking sound when turning the steering wheel fully right or left is a sound when the rack end contacts the stopper. This is normal.	
Hissing	Pump noise, though not loud, from the valve body unit can be heard when turning the steering wheel right or left. This is normal.	

Grating noise from pump	Cavitation caused by air bubbles in fluid.	Check fluid level. If low, fill reservoir to proper level, and check for leaks. Tighten or replace as necessary.
		Check for crushed suction hose or a loose hose clamp allowing air into the system. Tighten or replace as necessary.
Pump gear noise	NOTE: Pump noise up to 2 – 3 minutes after starting in cold weather (–20°C, –4°F or colder) is normal. Compare pump noise at operating temperature to another car.	If pump noise is abnormally loud, check the pump ball bearing and any parts (see page 17-35).

Fluid Leaks

- Check the gearbox assembly for oil leaks carefully. Oil can leak out of various points, depending on location of the faulty oil seals/seal rings. Check the following before removing the gearbox from the frame.

Steering Gearbox

- Leaking from the oil seal on the top of the valve housing. → Replace the valve oil seal from the valve housing.
- Leaking from cylinder end into left tie-rod boot. → Replace the valve oil seal from the pinion shaft. / Replace the cylinder end seal.
- Leaking from cylinder end into right tie-rod boot. → Replace the cylinder end seal or cylinder end.
- Leaking from the valve body unit/housing mounting section. → Tighten attaching bolts or replace the valve body unit or gear housing.

Pipes

- Leaking from cylinder pipe A or B connection (at flare nut). → Tighten connector. If still leaking, replace the pipe, cylinder or valve housing unit.
- Leaking caused by damaged cylinder pipe A or B. → Replace the cylinder pipe A or B.
- Leaking from feed pipe and return pipe of the valve body unit (at flare nut). → Tighten connector. If still leaking, replace the pipe or valve housing.

Pump	*Front seal leaking.*	*Replace front seal.*
	Pump housing leaks at either end.	Replace housing O-rings. If the housing still leaks, replace the pump.
Reservoir	Leaking from around cap.	Reservoir overfilled. Pull off the hose and drain to proper level.
		Air leak in suction side of system (reservoir, inlet hose, front pump seal).
Pump outlet line (high pressure)	Leaking at threaded fitting.	Tighten fitting. If still leaking, replace hose.
	Leaking at swagged joint.	Replace hose.
Low pressure hoses	Leaking because of damage, deterioration, or improper assembly.	Replace or repair as necessary.
Pipes	Leaking at gearbox connection. (at flare nut).	Tighten connector. If still leaking, replace the pipe or valve housing.

Steering Operation

Place the front wheels in the straight ahead position and measure the distance the steering wheel can be turned without moving the front wheels.

ROTATIONAL PLAY: 0 – 10 mm (0 – 0.39 in)

If the play exceeds the service limit, perform rack guide adjustment (see page 17-21).
If the play is still excessive after rack guide adjustment, inspect the steering linkage and gearbox as described on the next page.

ROTATIONAL PLAY

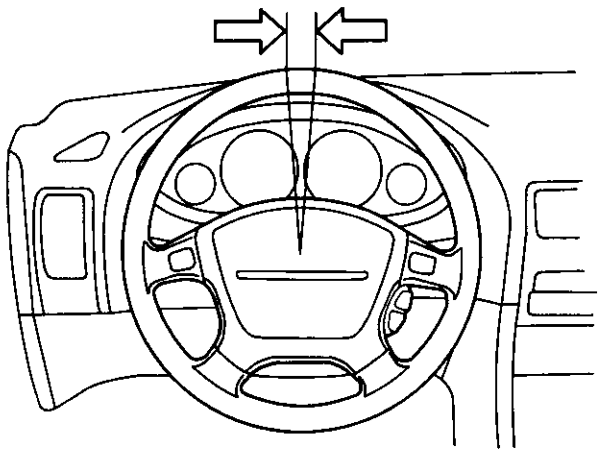

Power Assist Check with Car Parked

1. Check the power steering fluid level (see page 17-21) and pump belt tension (see page 17-20).

2. Start the engine, allow it to idle, and turn the steering wheel from lock-to-lock several times to warm up the fluid.

3. Attach a spring scale to the steering wheel. With the engine idling and the car on a clean, dry floor, pull the scale as shown and read it as soon as the tires begin to turn.

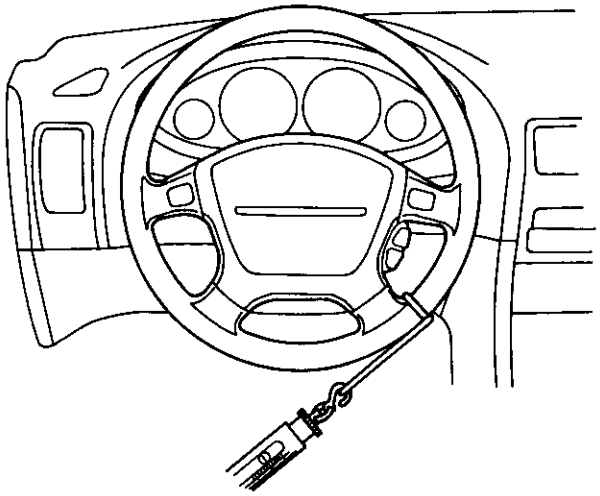

4. The scale should read no more than 33 N (3.4 kgf, 7.5 lbf). If it reads more or less, check the gearbox and pump.

Steering Linkage and Gearbox

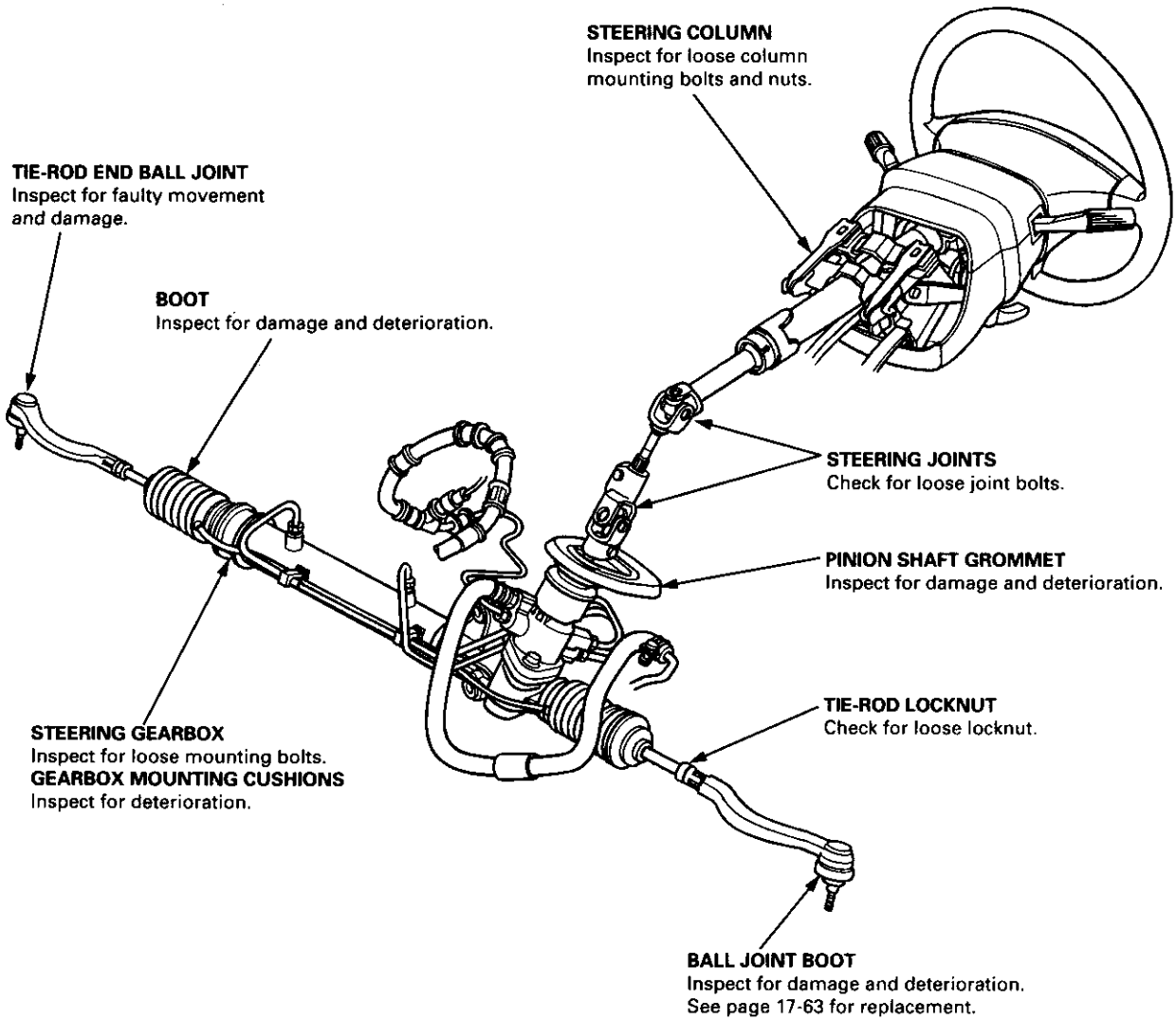

Pump Belt

NOTE: When using a new belt, first adjust the deflection or tension to the values for the new belt, then readjust the deflection or tension to the values for the used belt after running engine for five minutes.

Inspection

Attach the belt tension gauge to the belt and measure the tension of the belt.

Tension:
Used Belt: 390 – 540 N (40 – 55 kgf, 88 – 120 lbf)
New Belt: 740 – 880 N (75 – 90 kgf, 170 – 200 lbf)

NOTE:
- If there are cracks or any damage evident on the belt, replace it with a new one.
- Follow the manufacturer's instructions for the tension gauge.

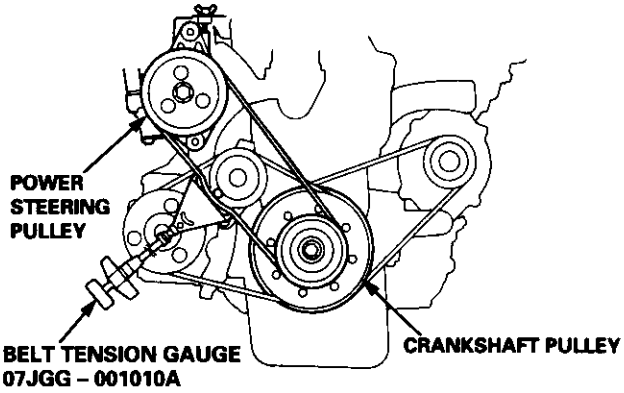

Inspect the pump belt for cracks or any damage. Replace the belt with a new one if necessary.

Measurement without Belt Tension Gauge:
Apply a force of 98 N (10 kgf, 22 lbf) and measure the deflection between the power steering pump and the crankshaft pulleys.

Deflection:
Used Belt: 11.5 – 13.5 mm (0.45 – 0.53 in)
New Belt: 8.0 – 10.0 mm (0.31 – 0.39 in)

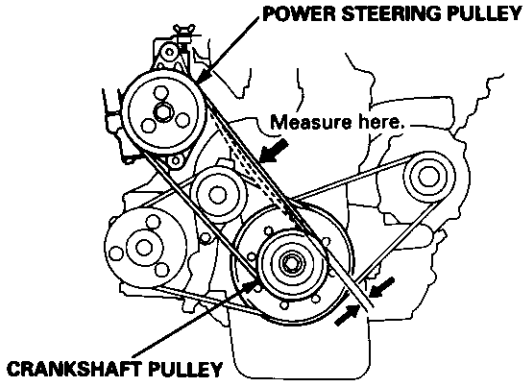

Adjustment

1. Loosen the power steering pump mounting bolts.
2. Turn the adjusting bolt to get the proper belt tension, then retighten the bolts.
3. Start the engine and turn the steering wheel from lock-to-lock several times, then stop the engine and recheck the deflection of the belt.

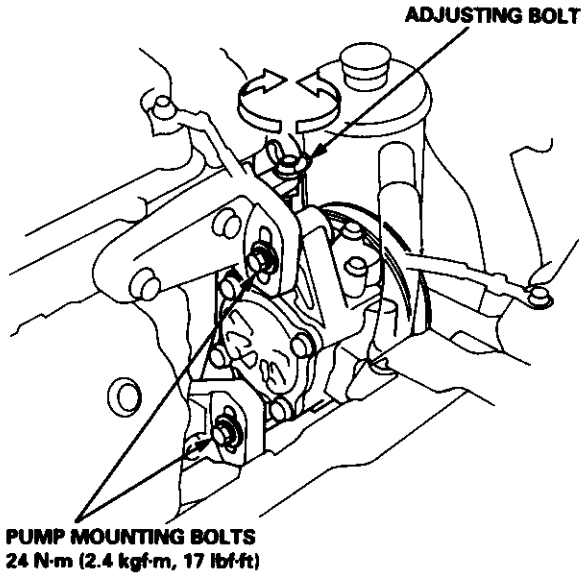

Rack Guide Adjustment

NOTE: Perform rack guide adjustment with the wheels in the straight ahead position.

1. Loosen the rack guide screw locknut with the special tool, then loosen the rack guide screw.

2. Tighten the rack guide screw until it compresses the spring and seats against the rack guide, then loosen it.

3. Retighten the rack guide screw to 3.9 N·m (0.4 kgf·m, 2.9 lbf·ft), then back it off to specified angle.

   Specified Return Angle: 20 ± 5°

4. Tighten the locknut while holding the rack guide screw.

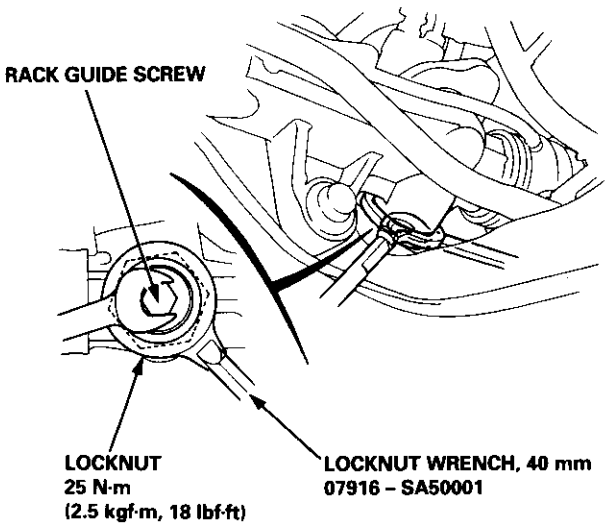

5. Check for tight or loose steering through the complete turning travel.

6. Perform following inspections:
   - Steering operation (see page 17-18).
   - Power assist with car parked.

Fluid Replacement

Check the reservoir at regular intervals, and add fluid as necessary.

CAUTION: Use only Genuine Honda Power Steering Fluid-V. Using other fluids such as ATF or other manufacturer's power steering fluid will damage the system.

SYSTEM CAPACITY:
1.06 liter (1.12 US. qt, 0.93 Imp.qt) at disassembly
RESERVOIR CAPACITY:
0.79 liter (0.83 US. qt, 0.70 Imp.qt)

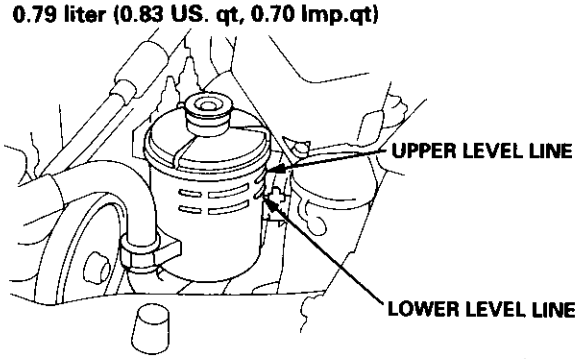

1. Raise the reservoir and disconnect the return hose that goes to the oil cooler.
2. Connect a hose of suitable diameter to the disconnected return hose and put the hose end in a suitable container.

   CAUTION: Take care not to spill the fluid on the body and parts. Wipe off the spilled fluid at once.

3. Start the engine, let it run at idle, and turn the steering wheel from lock-to-lock several times. When fluid stops running out of the hose, shut off the engine. Discard the fluid.

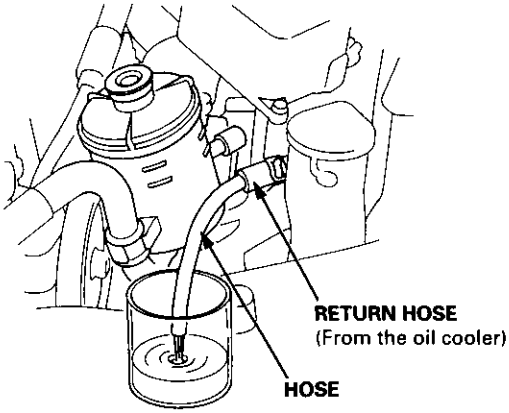

4. Refit the return hose on the reservoir.
5. Fill the reservoir to the upper level line.
6. Start the engine and run it at fast idle, then turn the steering from lock-to-lock several times to bleed air from the system.
7. Recheck the fluid level and add some if necessary.

   CAUTION: Do not fill the reservoir beyond the upper level line.

Pump Pressure Check

Check the fluid pressure as follows to determine whether the trouble is in the pump or gearbox.

NOTE: First check the power steering fluid level and pump belt tension.

CAUTION: Disconnect the high pressure hose with care so as not to spill the power steering fluid on the frame and other parts.

1. Disconnect the outlet hose from the pump outlet fitting, and install the pump joint adapter on the pump outlet.

2. Connect the hose joint adapter to the power steering pressure gauge, then connect the outlet hose to the adaptor.

3. Install the power steering pressure gauge to the pump joint adaptor as shown.

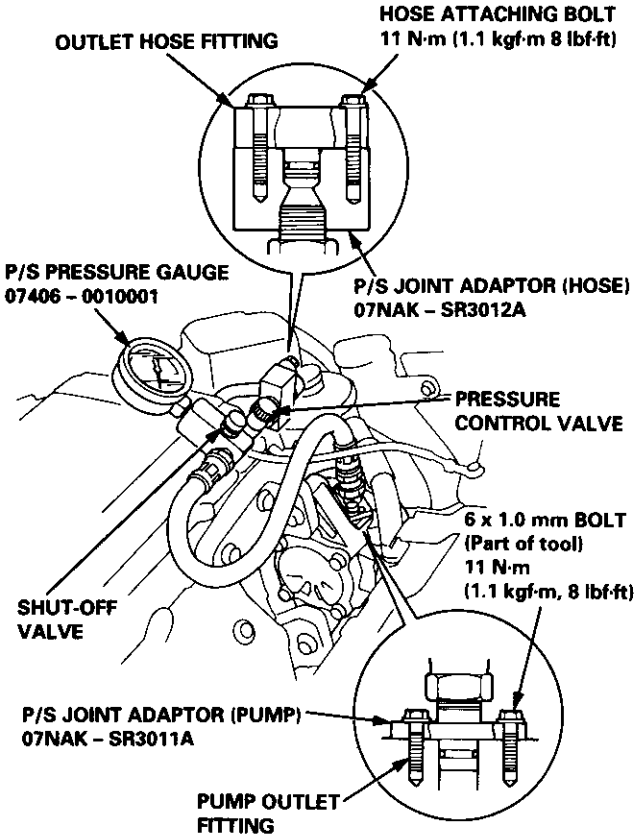

4. Open the shut-off valve fully.

5. Open the pressure control valve fully.

6. Start the engine and let it idle.

7. Turn the steering wheel from lock-to-lock several times to warm the fluid to operating temperature.

8. Measure steady-state fluid pressure while idling with the shut-off valve fully open. If the pump is in good condition, the gauge should read less than 1500 kpa (15 kgf/cm², 213 psi).
   If it reads high, check the feed line or valve body unit (see General Troubleshooting 17-10).

9. Close the shut-off valve, then close the pressure control valve gradually until the pressure gauge needle is stable. Read the pressure.

10. Immediately open the shut-off valve fully.

    CAUTION: Do not keep the shut-off valve closed more then 5 seconds or the pump could be damaged by over-heating.

    If the pump is in good condition, the gauge should read at least 6,400 – 7,400 kpa (65 – 75 kgf/cm², 924 – 1,067 psi). A low reading means pump output is too low for full assist. Repair or replace the pump.

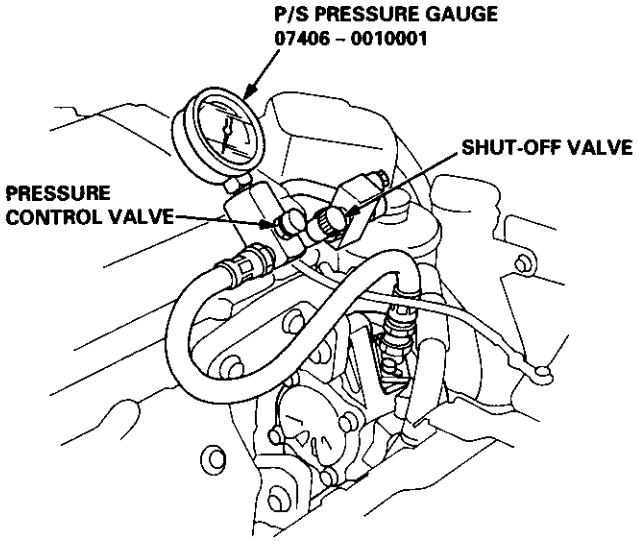

Fluid Leakage Inspection

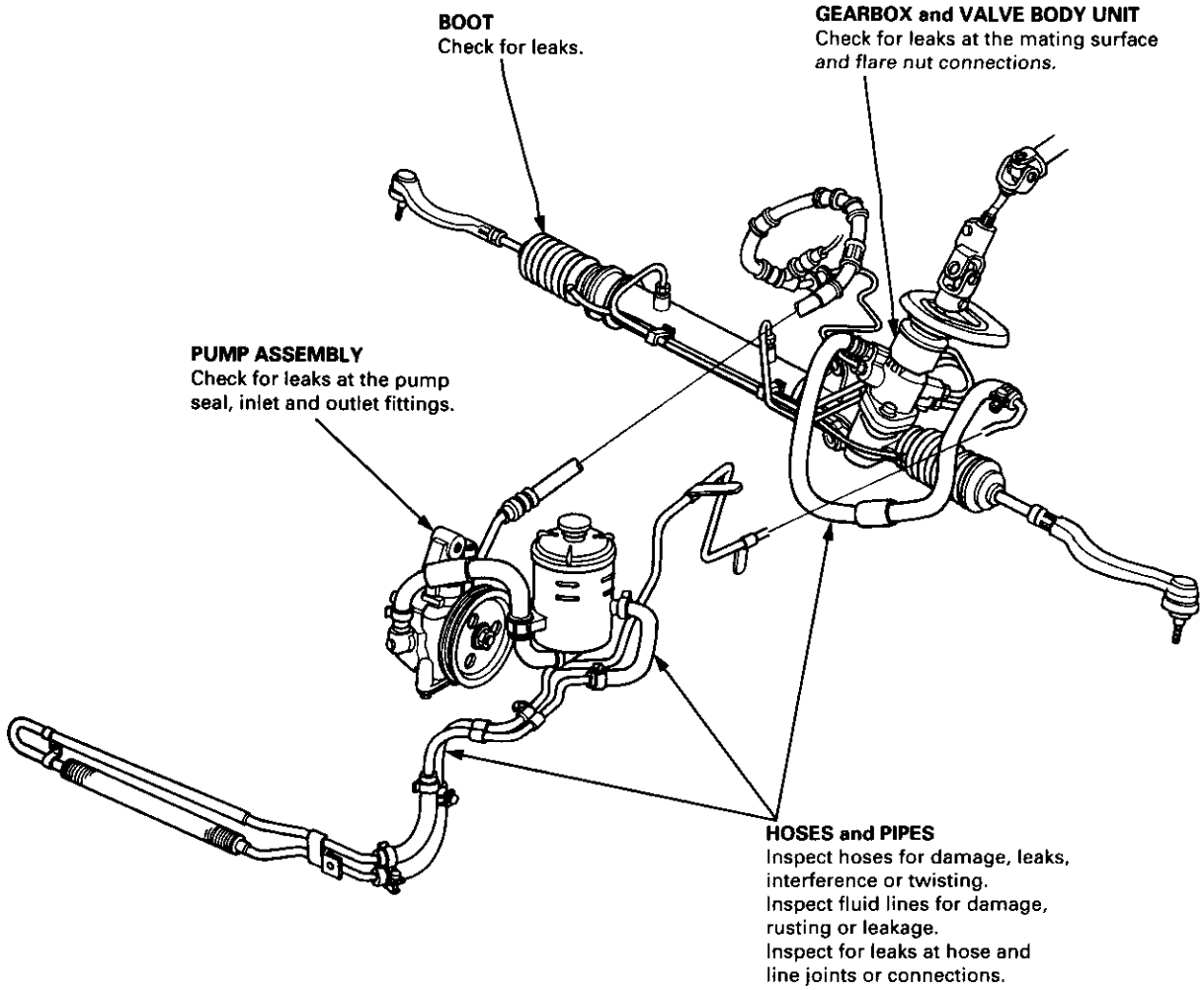

Removal

Airbag Removal

CAUTION:
- **All SRS electrical wiring harnesses are covered with yellow insulation.**
- **Before disconnecting any part of the SRS wire harness, connect the short connector(s).**
- **Replace the entire affected SRS harness assembly if it has an open circuit or damaged wiring.**

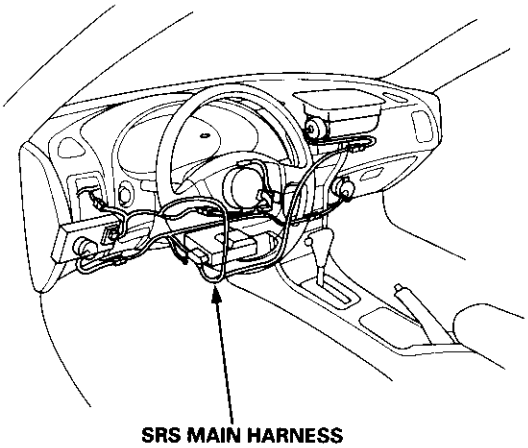

1. Disconnect the negative and positive cable from the battery.
2. Remove the access panel from the steering wheel lower cover, then remove the short connector.
3. Disconnect the connector between the airbag and cable reel.
4. Connect the short connector to the airbag side of the connector.

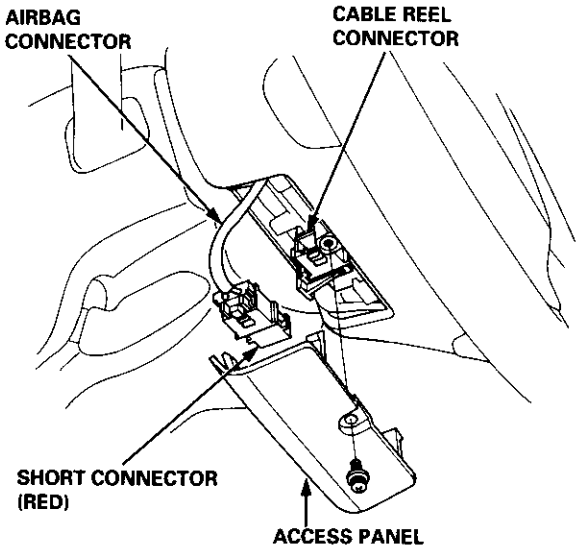

5. Remove the lid B and cruise control set/resume switch cover.
6. Remove the TORX® T30 bit bolts then remove the airbag assembly.

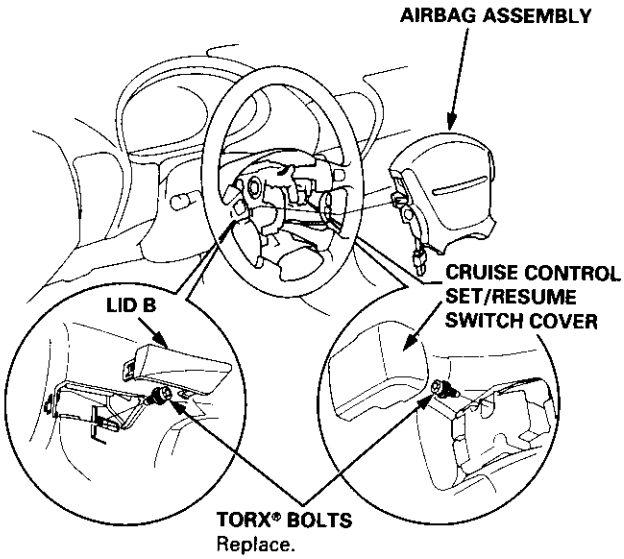

Removal

7. Disconnect the connectors from the horn and cruise control set/resume switches.

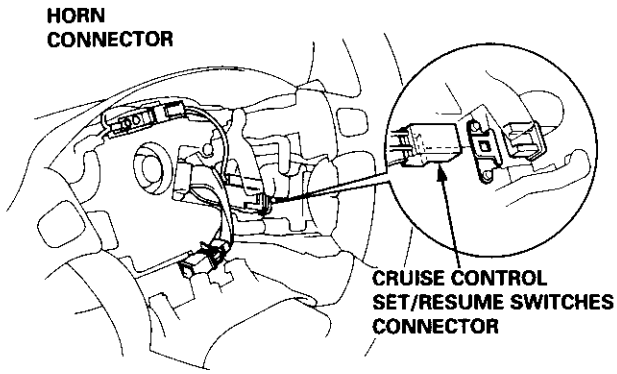

8. Remove the steering wheel nut.

9. Remove the steering wheel by rocking it slightly from side-to-side as you pull steadily with both hands.

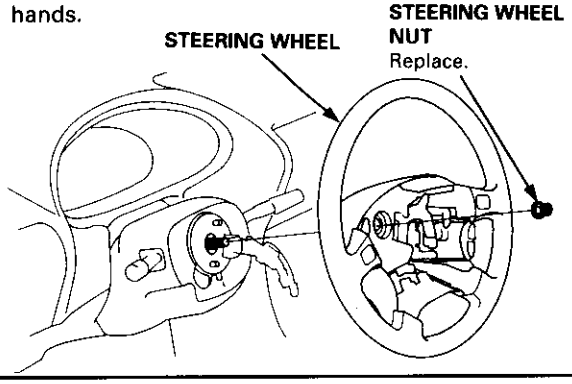

Disassembly/Reassembly

⚠ WARNING Store a removed airbag assembly with the pad surface up. If the airbag is improperly stored face down, accidental deployment could propel the unit with enough force to cause serious injury.

NOTE: If an intact airbag assembly has been removed from a scrapped car or has been found defective or damaged during transit, storage or service, it should be deployed (see section 23).

CAUTION:

- **Carefully inspect the airbag assembly before installing. Do not install an airbag assembly that shows signs of being dropped or improperly handled, such as dents, cracks or deformation.**
- **Always keep the short connector on the airbag connector when the harness is disconnected.**
- **Do not disassemble or tamper with the airbag assembly.**

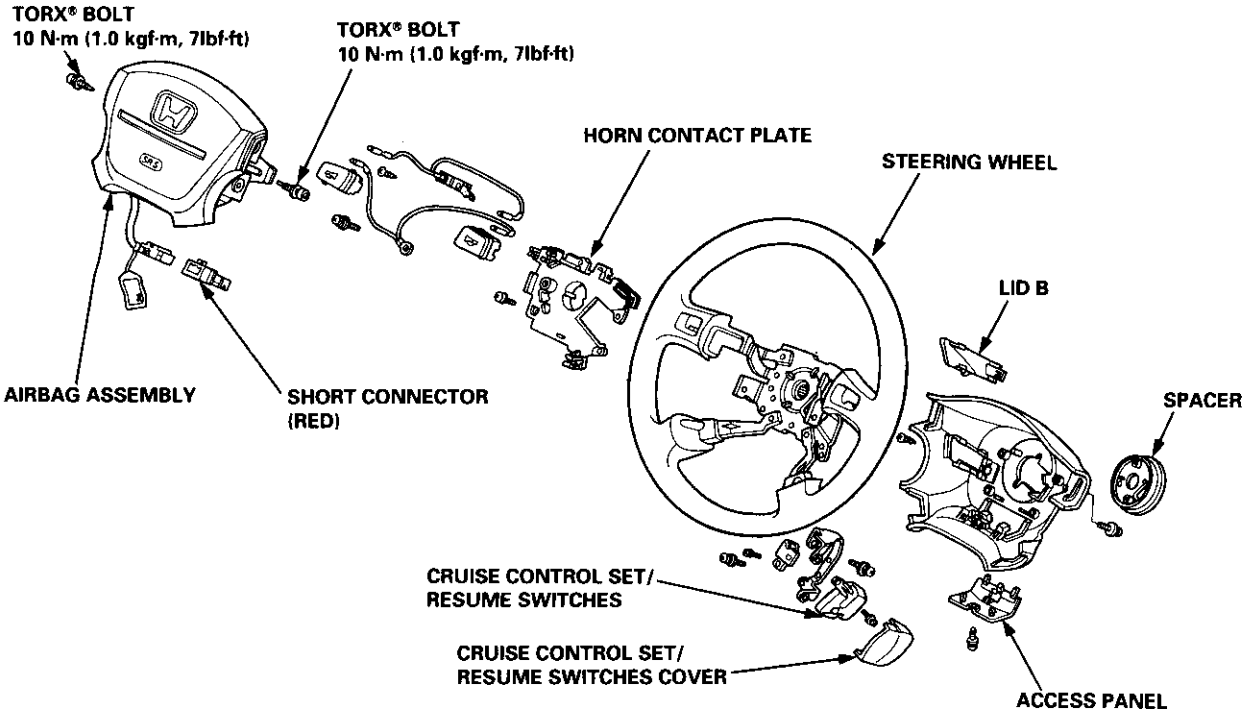

Installation

Airbag installation

CAUTION:

- **Before installing the steering wheel, align the front wheels straight ahead.**
- **Be sure to install the harness wires so that they are not pinched or interfering with other car parts.**
- **Do not replace the original steering wheel with any other design, since it will make it impossible to properly install the airbag. (Only use genuine HONDA replacement parts)**
- **After reassembly, confirm that the wheels are still straight ahead and that steering wheel spoke angle is correct. If minor spoke angle adjustment is necessary, do so only by adjustment of the tie-rods, not by removing and repositioning the steering wheel.**

⚠ WARNING Confirm that the airbag assembly is securely attached to the steering wheel; otherwise, severe personal injury could result during airbag deployment.

1. Before installing the steering wheel, center the cable reel.
   Do this by first rotating the cable reel clockwise until it stops.
   Then rotate it counterclockwise (approximately two turns) until:
   — The yellow gear tooth lines up with the mark on the cover.
   — The arrow on the cable reel label points straight up.

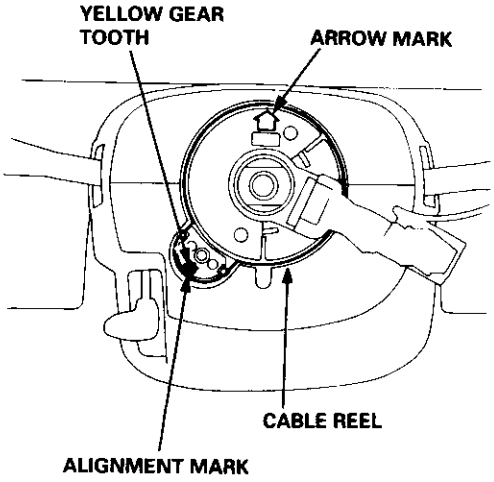

2. Install the steering wheel.

   NOTE: Be sure the steering wheel shaft engages the cable reel and canceling sleeve.

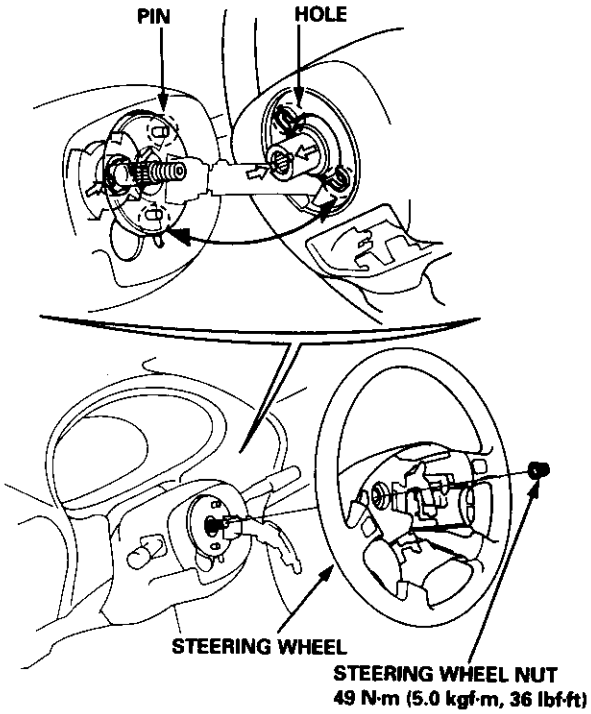

3. Attach the cruise control set/resume switches connector to the steering wheel clip.

4. Connect the horn connector.

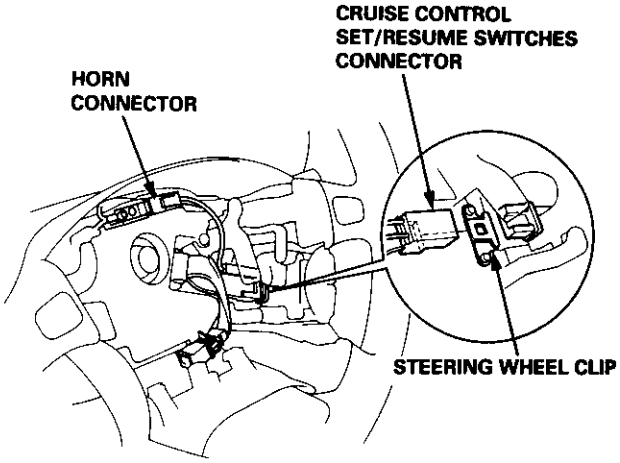

5. Install the airbag assembly with new TORX® bolts.

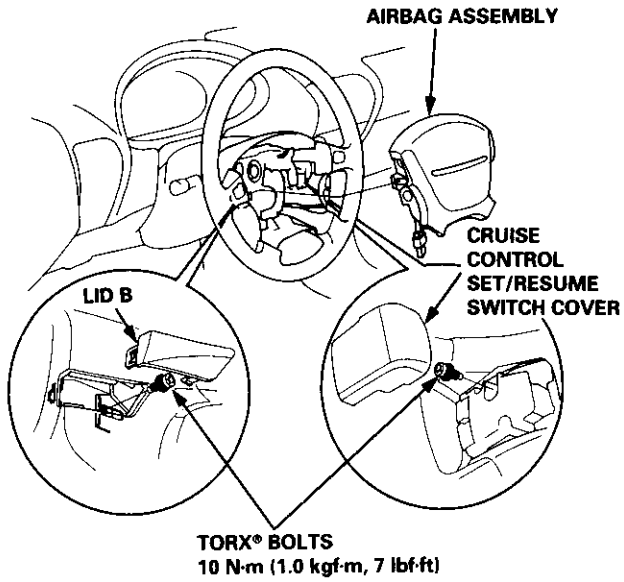

6. Disconnect the short connector from the airbag connector.

7. Connect the airbag 3-P connector and cable reel 3-P connector.

8. Attach the short connector on the access panel, and install the access panel on the steering lower cover.

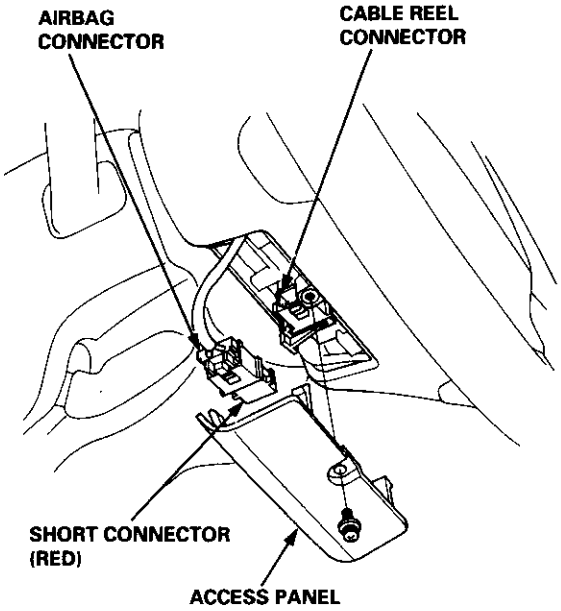

9. Connect the battery positive terminal and then connect the negative terminal.

10. After installing the airbag assembly, confirm proper system operation:
    - Turn the ignition to II: the instrument panel SRS indicator light should come on for about 6 seconds and then go off.
    - Confirm operation of horn buttons.
    - Confirm operation of cruise control set/resume switches.
    - Turn the steering wheel counterclockwise and make sure the yellow gear tooth still lines up with the alignment mark.

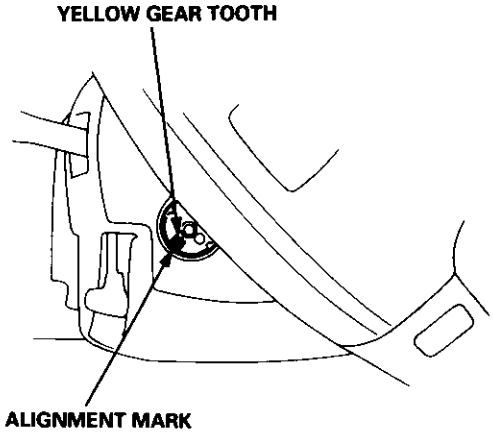

Removal

CAUTION:
- **All SRS electrical wiring harnesses are covered with yellow insulation.**
- **Before disconnecting any part of the SRS wire harness, connect the short connector (s).**
- **Replace the entire affected SRS harness assembly if it has an open circuit or damaged wiring.**

1. Remove the airbag assembly and steering wheel (see page 17-25).
2. Remove the lower cover.
3. Remove the driver's knee bolster.

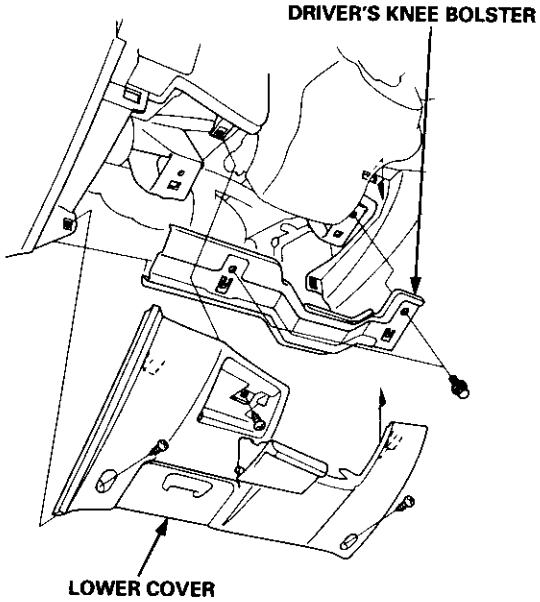

4. Remove the column covers by removing the screws.

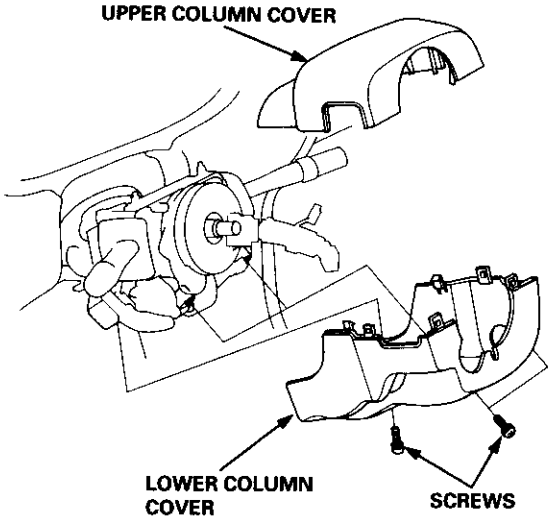

5. Remove the connector holder and disconnect the SRS main harness from the cable reel wire harness at the under side of the column bracket.

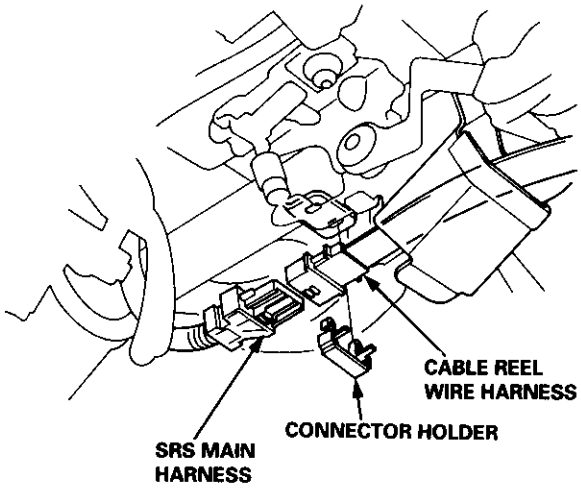

6. Remove the cable reel and turn signal canceling sleeve.
7. Remove the combination switch from the steering column by disconnecting the connectors.

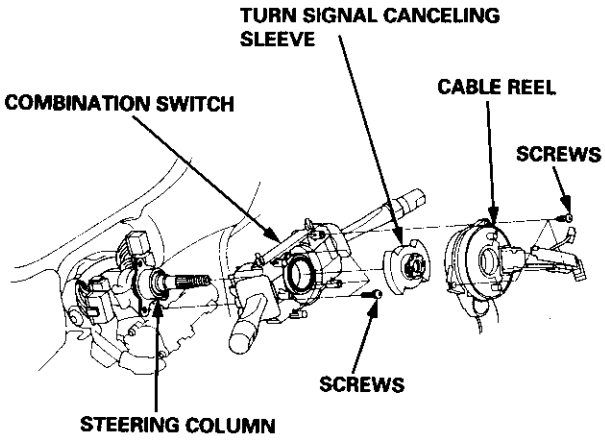

8. Remove the steering joint cover.

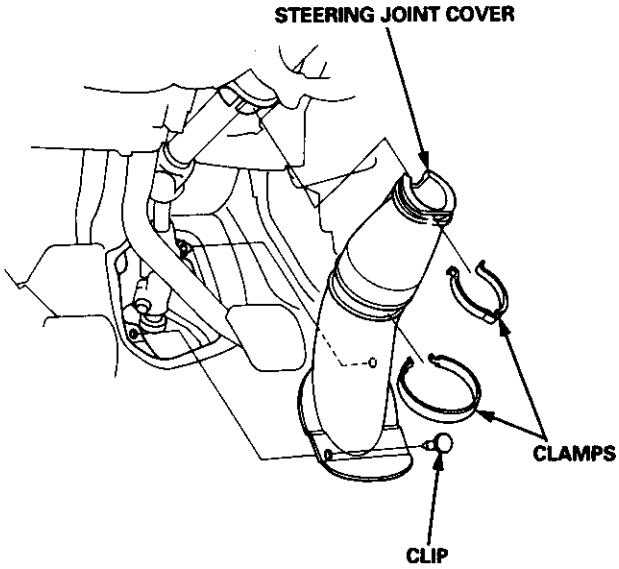

9. Remove the steering joint bolts, and move the joint toward the column.

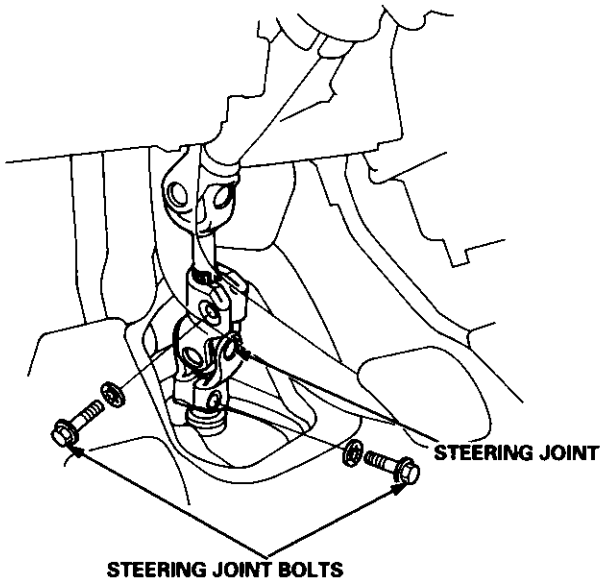

10. Disconnect the ignition switch connectors from the under-dash fuse/relay box.

11. Remove the steering column by removing the attaching nuts and bolts.

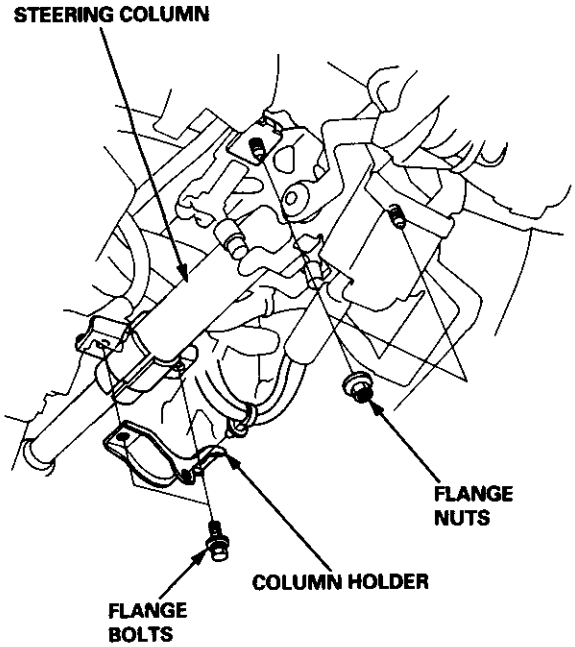

Inspection

- Check the steering column ball bearing and steering joint bearings for play and proper movement.
  If there is noise or excessive play, replace the joint or column assembly.

- Check the retaining collar for damage.
  If it is damaged, replace the retaining collar.

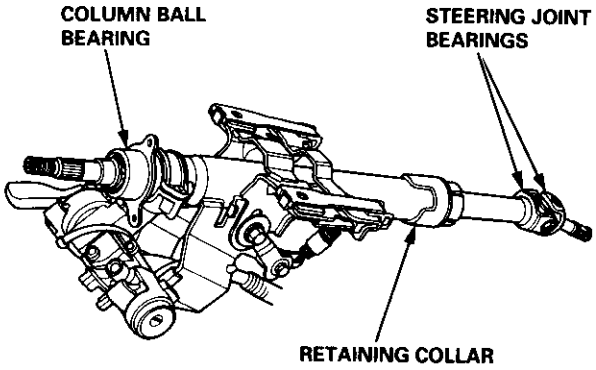

- Check the absorbing plates, absorbing plate guides and sliding capsules for distortion or breakage.
  Replace them as an assembly if they are distorted or broken.

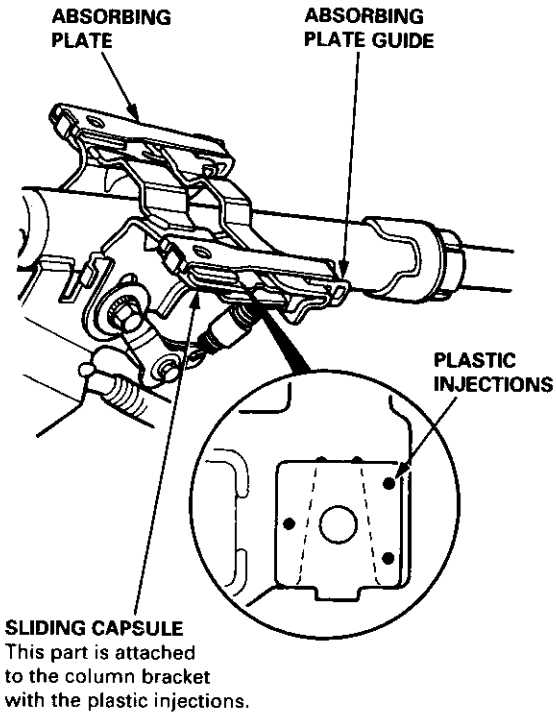

- Check the tilt mechanism for proper movement and damage.

  — Attach a spring scale to the knob of the tilt lever. Measure the preload required to move the lever.

  Preload: 70 – 90 N (7 – 9 kgf, 15 – 20 lbf)

  — If the preload measured is not within the specification, remove the 6 mm bolt and stopper.
  Adjust the preload by retightening the tilt lock bolt until the correct force can be obtained.
  — Reinstall the stopper and 6 mm bolt and recheck the preload.

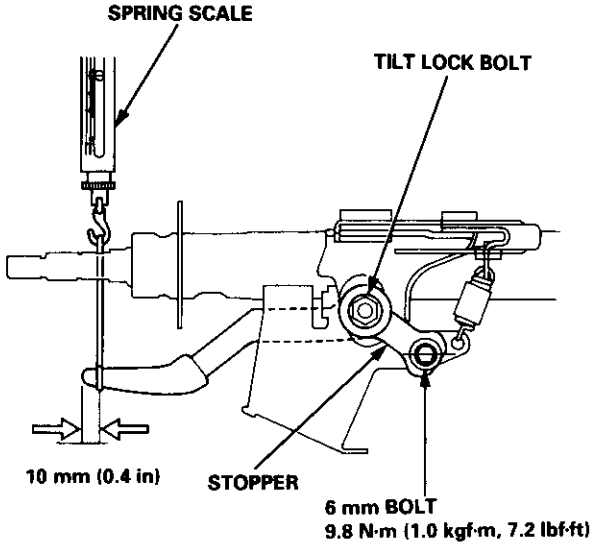

Installation

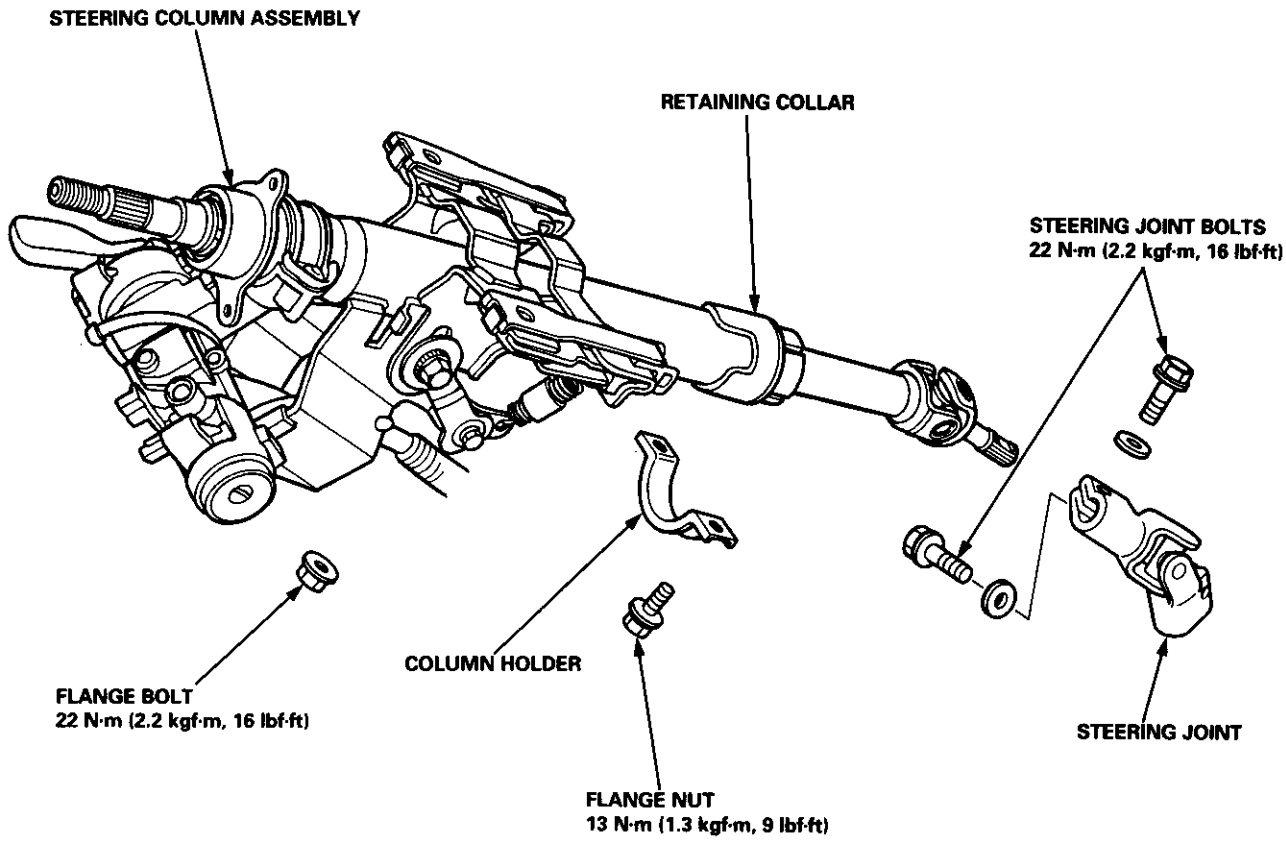

(cont'd)

Installation (cont'd)

CAUTION:
- **All SRS electrical wiring harnesses are covered with yellow insulation.**
- **When disconnecting the SRS wire harness, install the short connector on the airbag, then disconnect the wire harness.**
- **Replace the entire affected SRS harness assembly if there is an open circuit or damage to the wiring.**

1. Slip the upper end of the steering joint onto the column shaft (line up the bolt hole with the flat on the shaft), and loosely install the upper steering joint bolt.

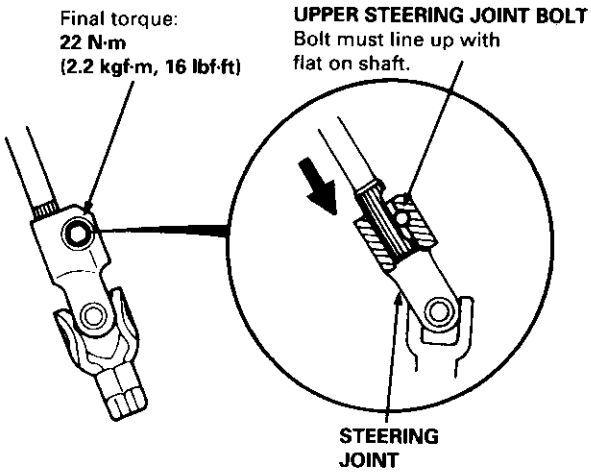

2. Slip the lower end of the steering joint onto the pinion shaft. Line up the bolt hole with the groove around the shaft) and loosely install the lower bolt.

   NOTE:
   - Be sure that the lower steering joint bolt, is securely in the groove in the steering gearbox pinion.
   - Before tightening the steering joint bolts, pull on the steering joint to make sure that the steering joint is fully seated.

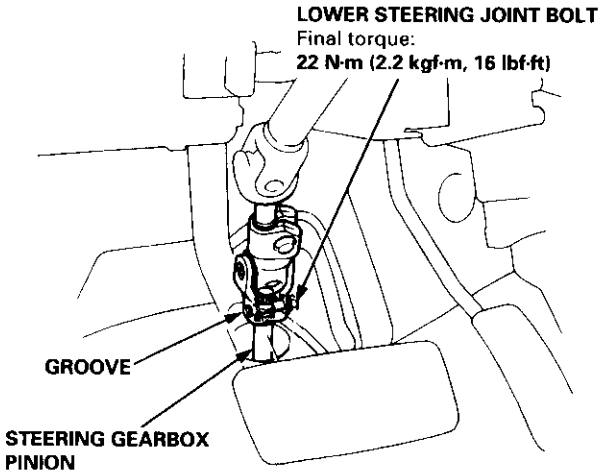

3. Install the steering column with the flange nuts, then install the column holder and flange bolts.

4. Tighten the upper and lower steering joint bolts loosely installed in step 2.

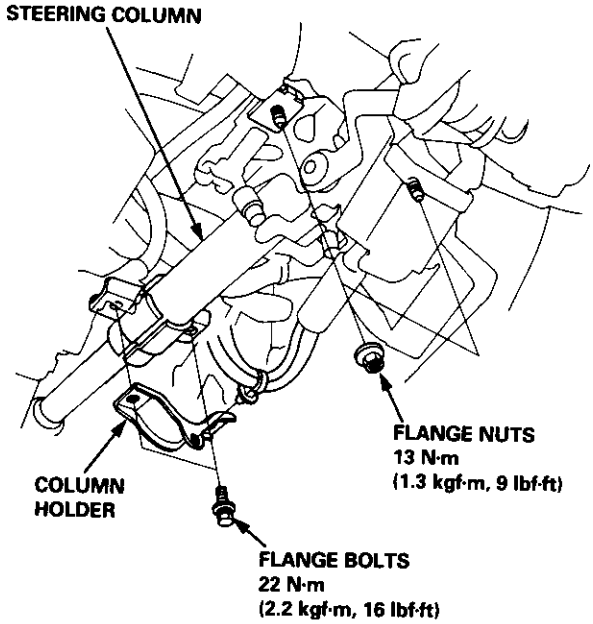

5. Install the steering joint cover with the clamps and clip.

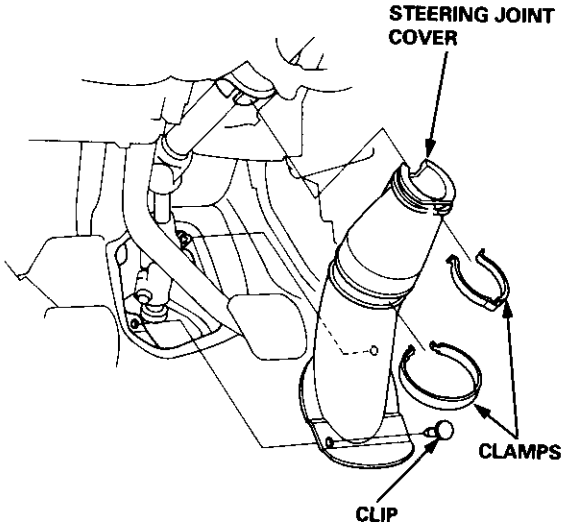

6. Connect the ignition switch wire connectors to the under-dash fuse/relay box.

7. Install the combination switch and turn signal canceling sleeve onto the steering column.

   NOTE: Be sure the wires are not caught or pinched by any parts when installing the combination switch.

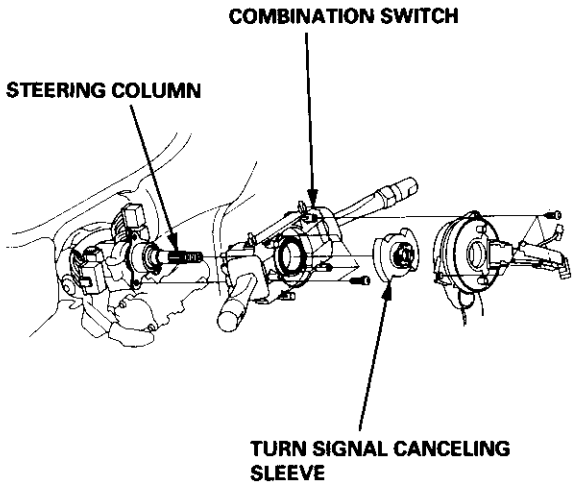

8. Install the cable reel onto the steering column, then connect the SRS main harness and cable reel wire harness and install the connector holder.

   NOTE: Align the slot in the cable reel with the projection on the canceling sleeve.

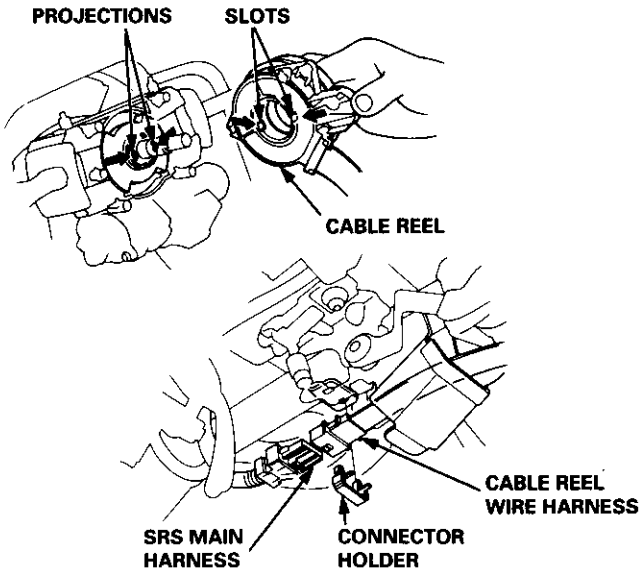

9. Install the column covers.

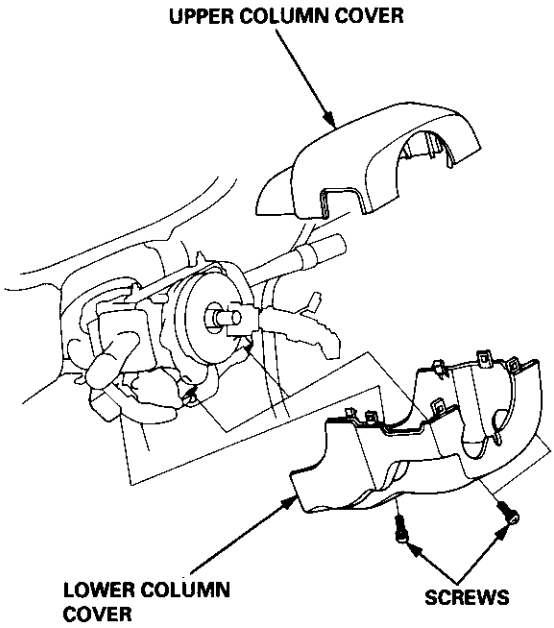

10. Install the driver's knee bolster.

11. Install the lower cover.

12. Install the steering wheel (see page 17-26).

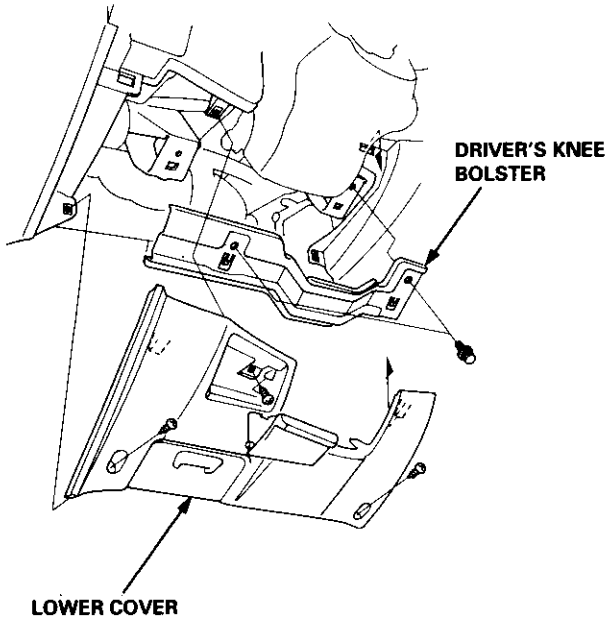

Power Steering Hoses, Pipes

Replacement

NOTE:
- Connect each hose to the corresponding pipe securely until it stops at the stopper on the pipe.
  Install the clamp or adjustable clamp at the specified distance from the hose end as shown in the drawing.
- Add the power steering fluid to the specified level on the reservoir and check for leaks (see page 17-23).

CAUTION: Check all clamps for deterioration and deformation, and replace with new ones if necessary.

<ADJUSTABLE HOSE CLAMP:>

Put over the pipe until the hose stops at the stopper.

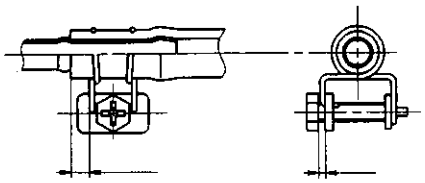

2.5 – 5.5 mm (0.01 – 0.22 in) **2.0 – 4.0 mm (0.08 – 0.16 in)**

<HOSE CLAMP:>

Put over the pipe until the hose stops at the stopper.

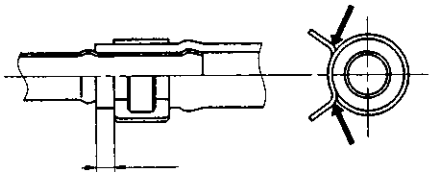

2.5 – 5.5 mm (0.01 – 0.22 in)

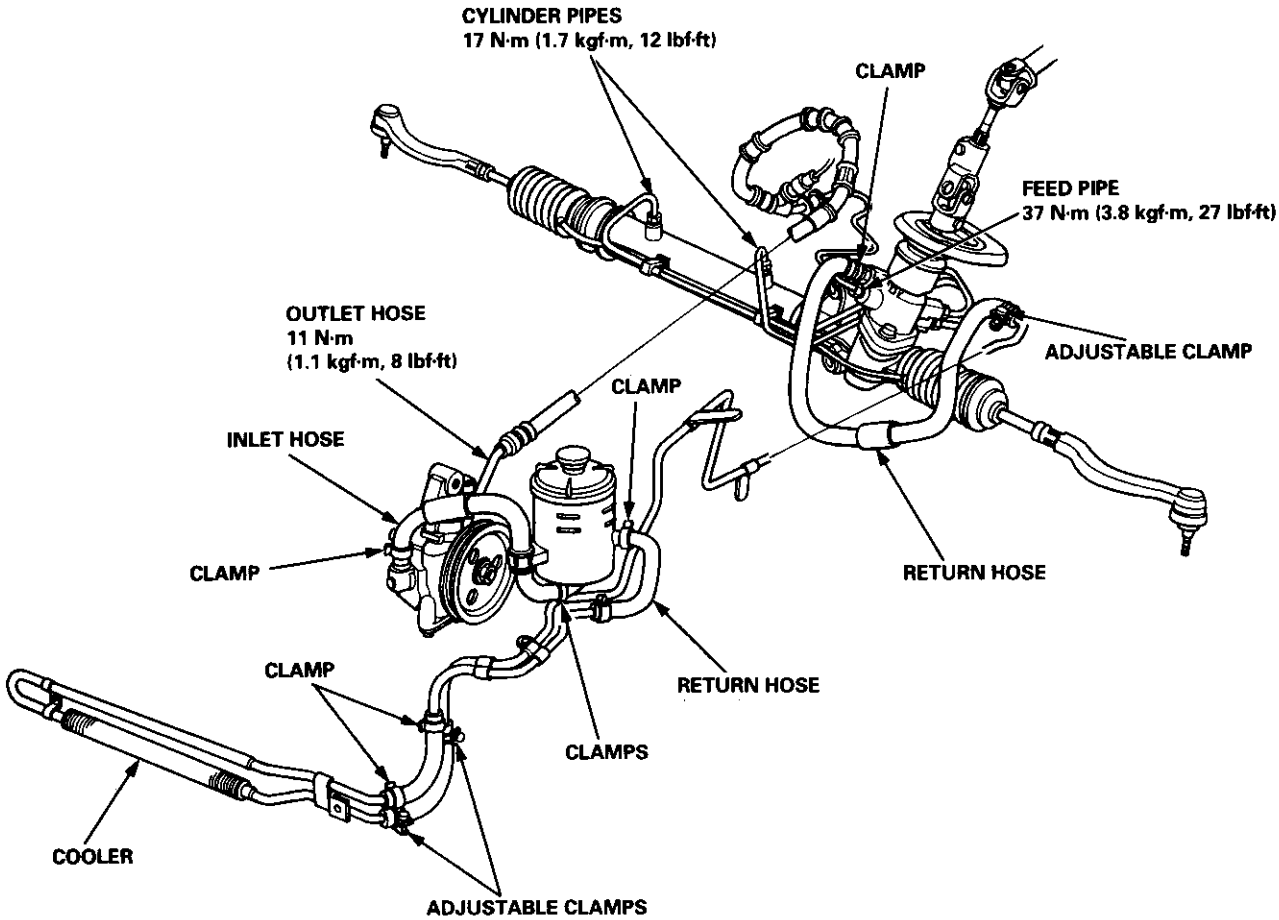

Power Steering Pump

Removal

NOTE: Before disconnecting the hoses from the pump, place a suitable container under the car.

1. Drain the power steering fluid from the reservoir.
2. Remove the belt by loosening the pump adjusting bolt and mounting bolts.
3. Disconnect the inlet and outlet hoses from the pump and plug the hoses.

   NOTE: Take care not to spill the fluid on the body or parts. Wipe off spilled fluid at once.

4. Remove the pump mounting bolt, then remove the pump.

   NOTE: Do not turn the steering wheel with the pump removed

5. Wrap the opening of the pump with a piece of tape to prevent any foreign material. See page 17-44 for pump installation.

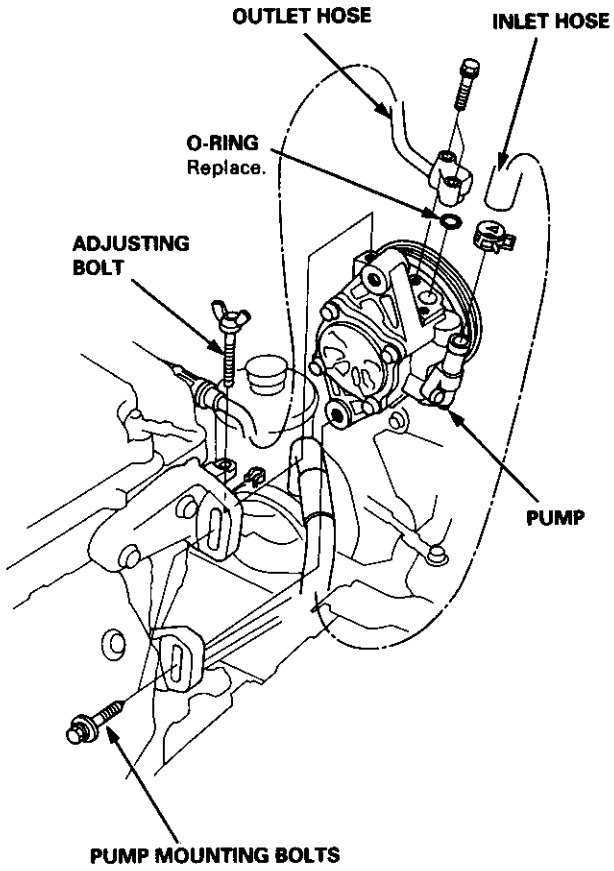

Disassembly

Pulley Removal

1. Drain the fluid from the pump.
2. Hold the steering pump in a vise with soft jaws, and hold the pulley with the special tool and remove the pulley nut and pulley.

   CAUTION: Be careful not to damage the pump housing with the jaws of the vise.

   NOTE: Pulley nut has left-hand threads.

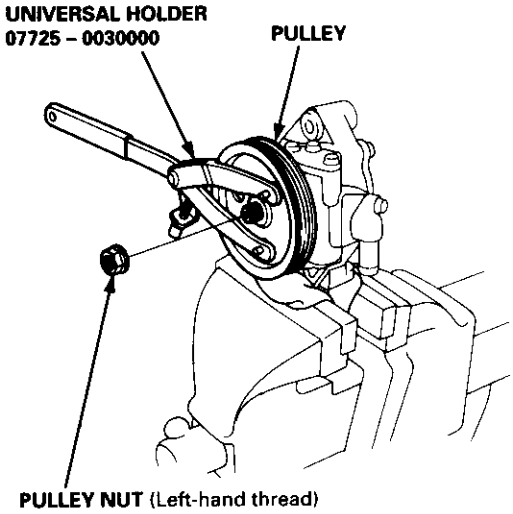

(cont'd)

Disassembly (cont'd)

Flow Control Valve Removal/Inspection

1. Remove the control valve cover by removing the three flange bolts.
2. Remove the spring, flow control valve and O-rings.

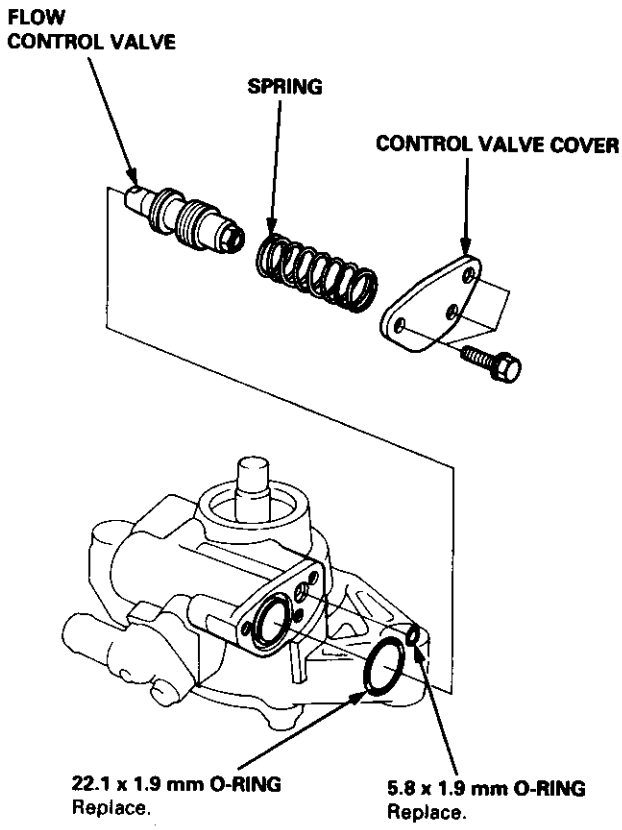

3. Check the flow control valve for wear, burrs, and other damage to the edges of the grooves in the valve.

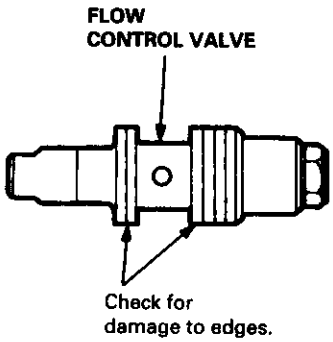

4. Inspect the bore for the flow control valve for scratches or wear.
5. Slip the valve back in the pump and check that it moves in and out smoothly.

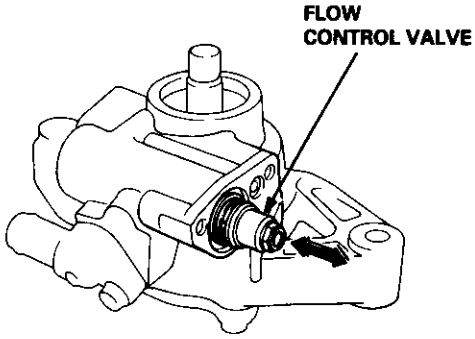

— If OK, go on step 6, if not replace the valve and recheck the valve movement.

NOTE: The original valve was selected for a precise fit in the pump housing bore, so make sure the new one has the same identification mark.

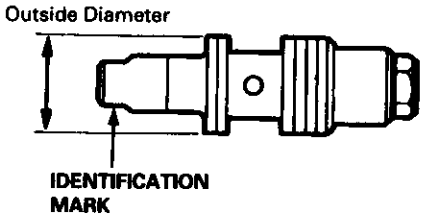

Mark	Part Name	Outside Diameter mm (in)
A	FLOW CONTROL VALVE A	17.991 – 17.996 (0.7083 – 0.7085)
B	FLOW CONTROL VALVE B	17.996 – 18.001 (0.7085 – 0.7087)

— If the valve movement still incorrect, replace the pump as an assembly.

6. Attach a hose to the end of the valve as shown.

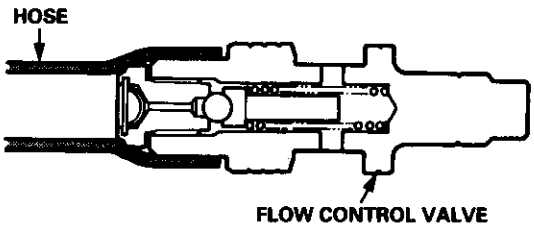

7. Submerge the valve in a container of power steering fluid or solvent, and blow in the hose. If air bubbles leak through the valve at less than 100 kPa (1.0 kgf/cm², 14.2 psi), replace or repair it as follows.

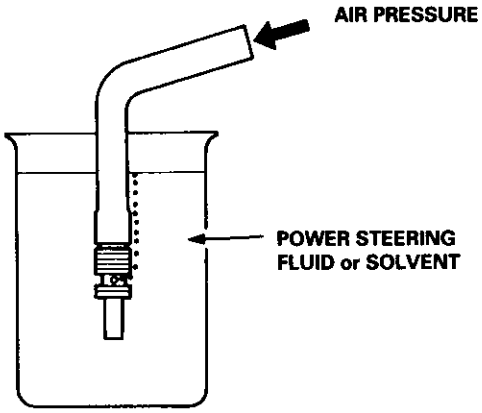

8. Hold the bottom end of the valve with a open end wrench.

9. Unscrew the seat in the top end of the valve, and remove any shims, the relief check ball, relief valve and relief valve spring.

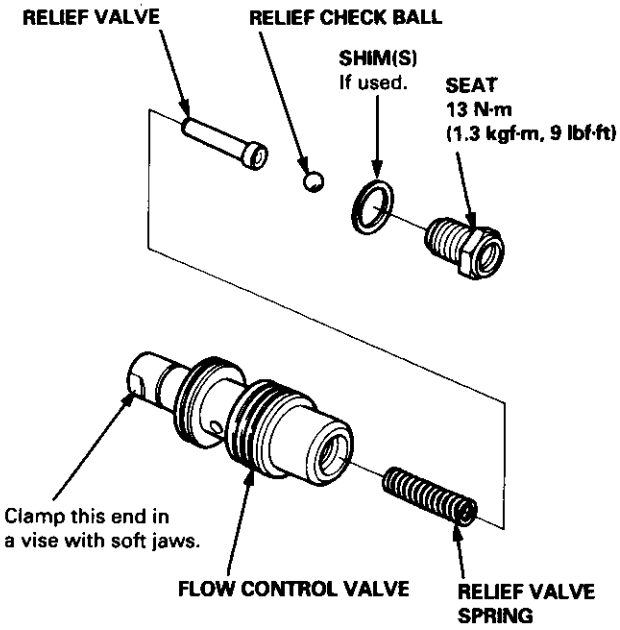

10. Clean all the parts in solvent, dry them off, then reassemble and retest the valve. See page 17-43 for flow control valve installation.

NOTE: If necessary, relief pressure is adjusted at the factory by adding shims under the check ball seat. If you found shims in your valve, be sure you reinstall as many as you took out.

Pump Rotor Removal

CAUTION: The pump components are made of aluminum. Be careful not to damage them when servicing.

1. Remove the inlet joint and O-ring.

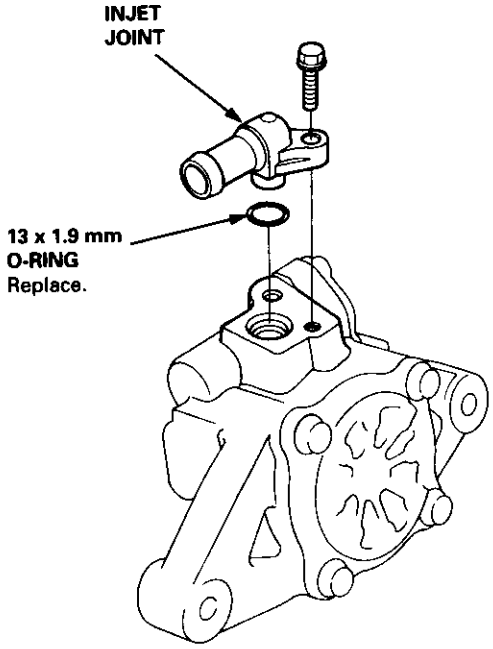

2. Remove the pump cover and O-ring.

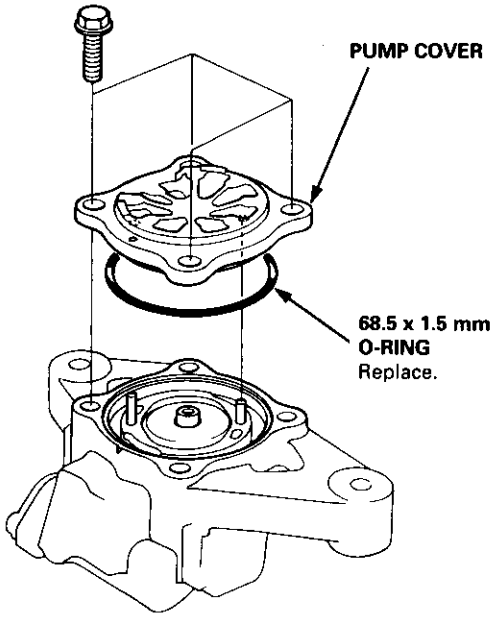

(cont'd)

Disassembly (cont'd)

3. Remove the pump cam ring from the pump housing.

   NOTE: Replace the pump as an assembly, if the cam ring must be replaced.

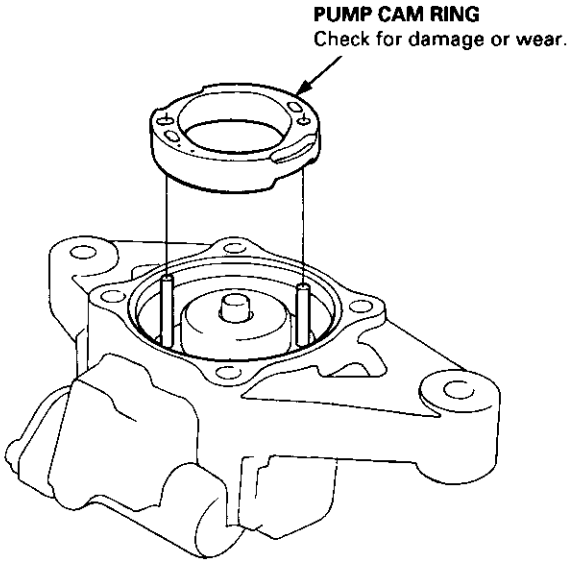

4. Remove the pump rotor and vanes.

   NOTE: Replace the pump as an assembly, if the pump rotor or vanes must be replaced.

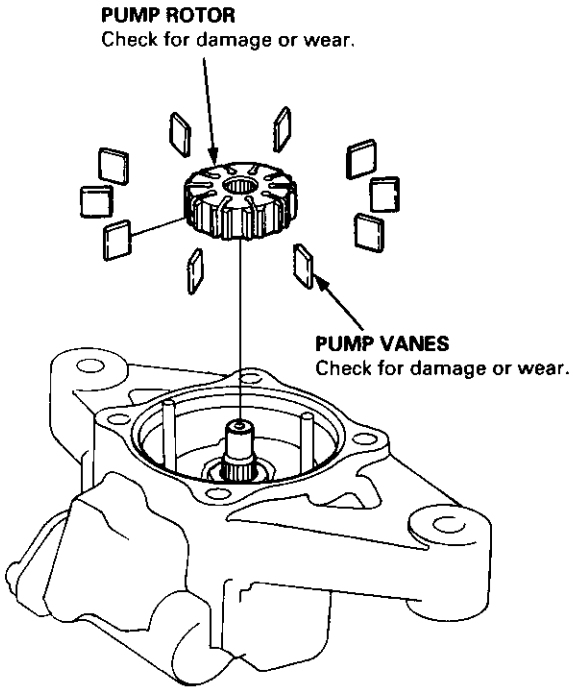

5. Remove the two rollers from the side plate.

6. Remove the side plate and preload spring.

   NOTE: Replace the pump as an assembly, if the side plate must be replaced.

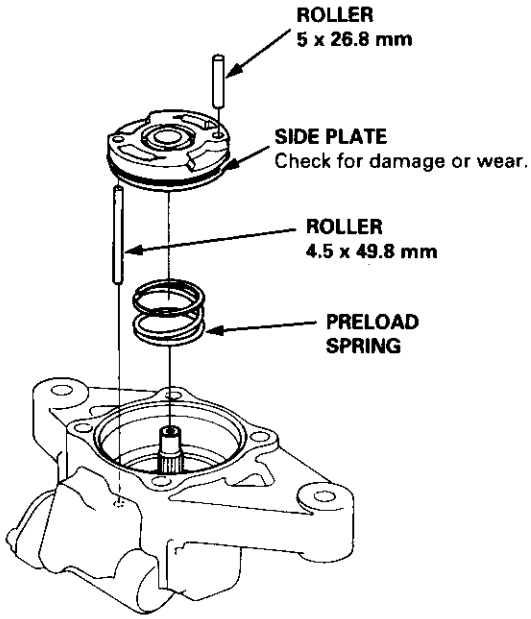

7. Remove the O-rings from the side plate.

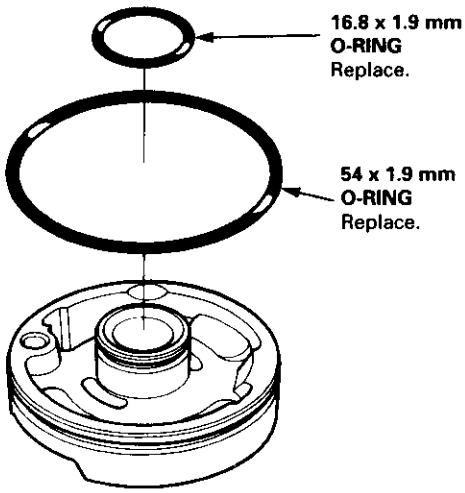

8. Remove the circlip, then remove the drive shaft assembly from the pump housing using a plastic hammer.

9. Remove the seal spacer and oil seal.

10. Inspect the pump housing for damage on the sealing surfaces.

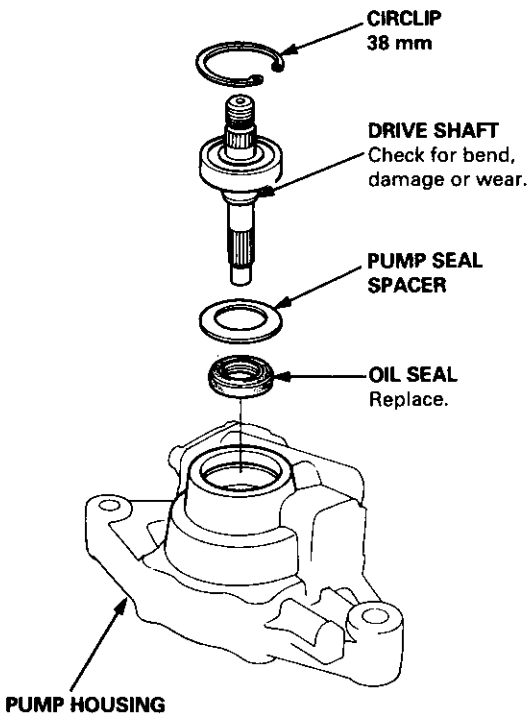

11. Inspect the bearing by rotating the outer race slowly. If any play or roughness is felt, replace the bearing.

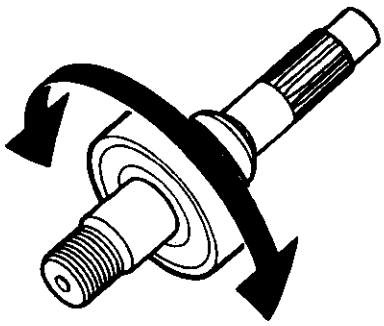

12. Remove and discard the bearing using the special tool and a press.

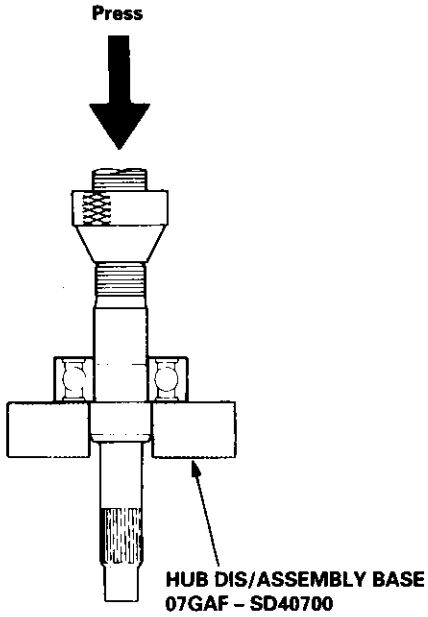

13. Install the new bearing using the special tool and a press.

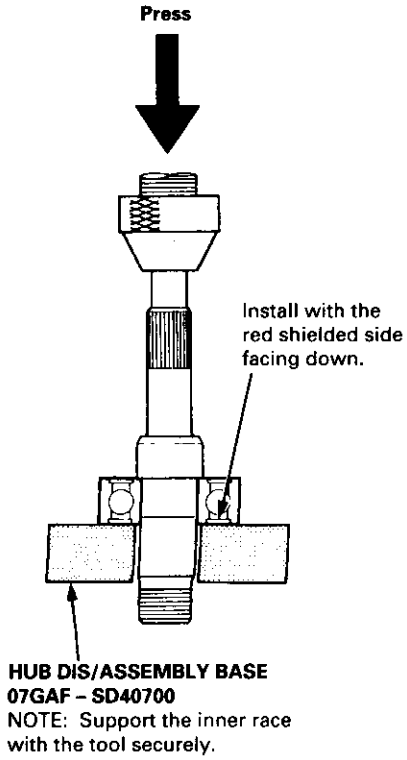

Power Steering Pump

Reassembly

CAUTION: The power steering components are made of aluminum. Avoid damaging the components during assembly.

NOTE:

- Clean the disassembled parts with a solvent and dry them with compressed air. Do not dip the rubber parts in a solvent.
- Always replace the O-rings and rubber seals with new ones before assembly.
- Apply recommended power steering fluid or steering grease (Honda P/N: 08733 – B070E) to the parts indicated in the assembly procedures.
- Do not allow dust, dirt, or other foreign materials to enter the power steering system.
- Replace the pump as an assembly if the parts indicated with asterisk (*) are worn or damaged.

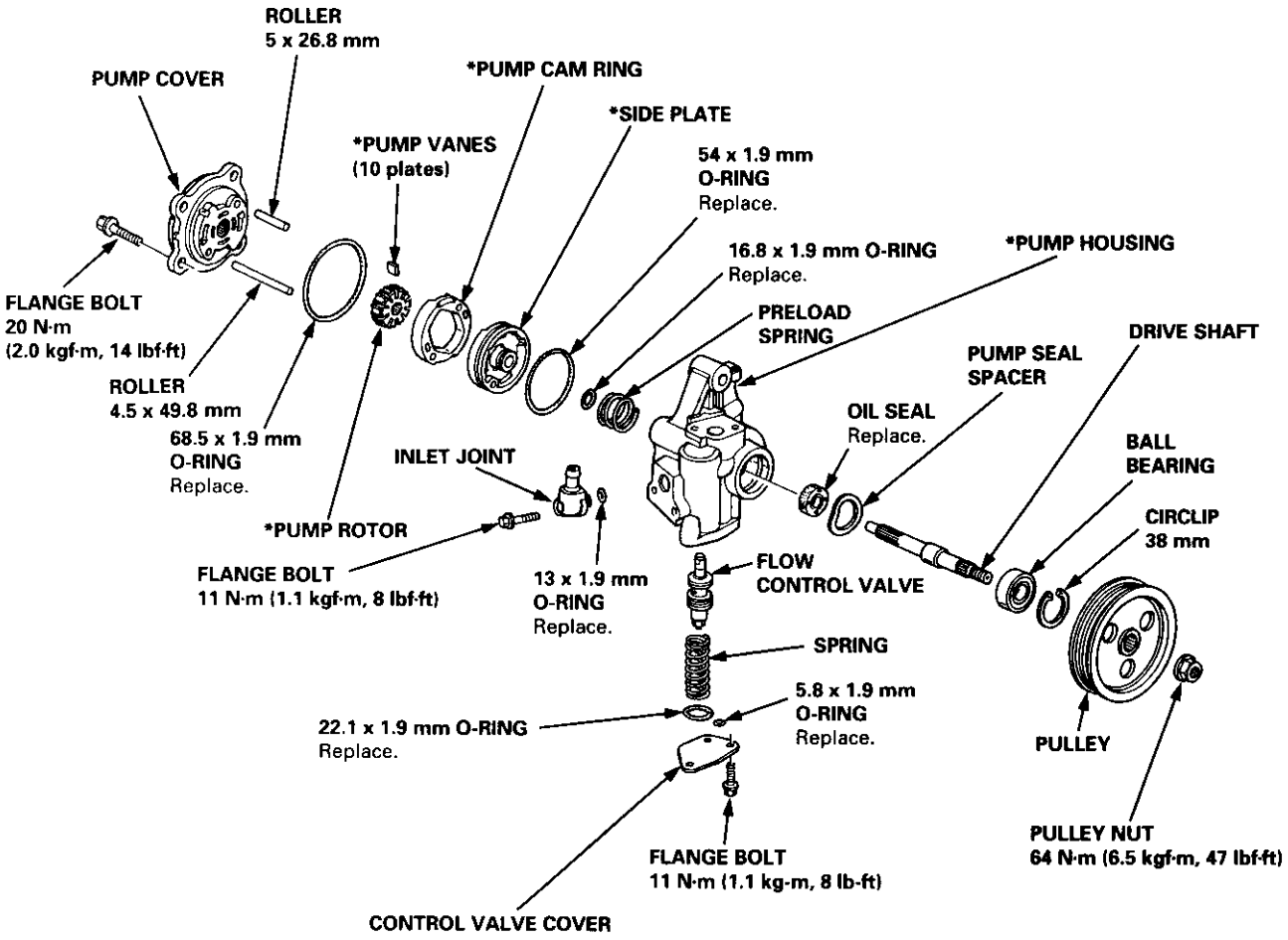

Pump Rotor Installation

1. Coat the lip of the new oil seal with steering grease (Honda P/N 08733 – B070E).

2. Install the new oil seal in the pump housing by hand, then install the pump seal spacer.

   NOTE: Insert the oil seal with its grooved side facing in.

3. Install the pump drive shaft assembly with the special tool.

4. Install the 38 mm circlip with its tapered side facing out.

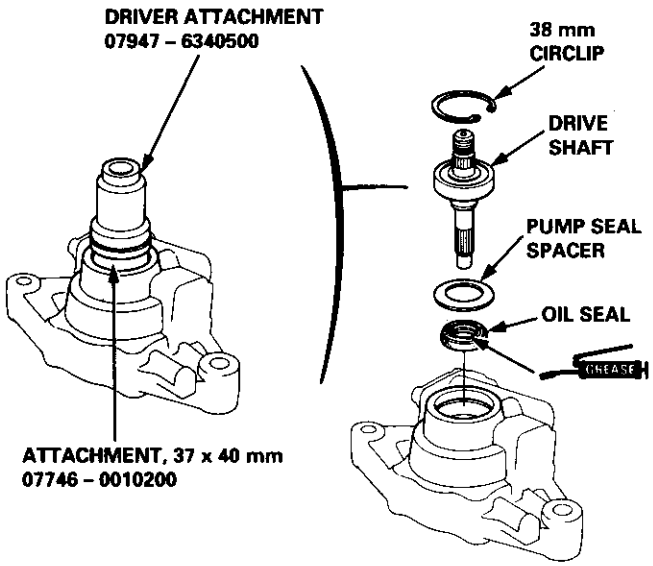

5. Coat the side plate grooves with the recommended power steering fluid, then position the 16.8 x 1.9 mm and 54 x 1.9 mm O-rings on the side plate.

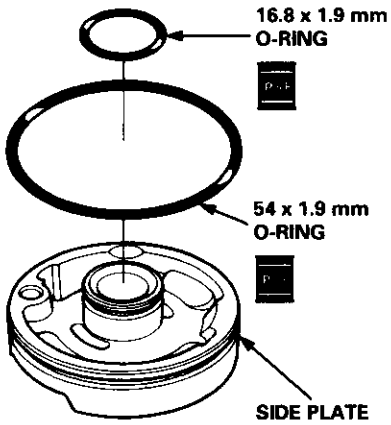

6. Install the preload spring in the pump housing.

7. Set the 4.5 x 49.8 mm roller in the 4.5 mm hole in the pump housing.

8. Set the side plate over the roller and install it on the pump housing.

9. Set the 5 x 26.8 mm roller in the 5 mm hole in the side plate.

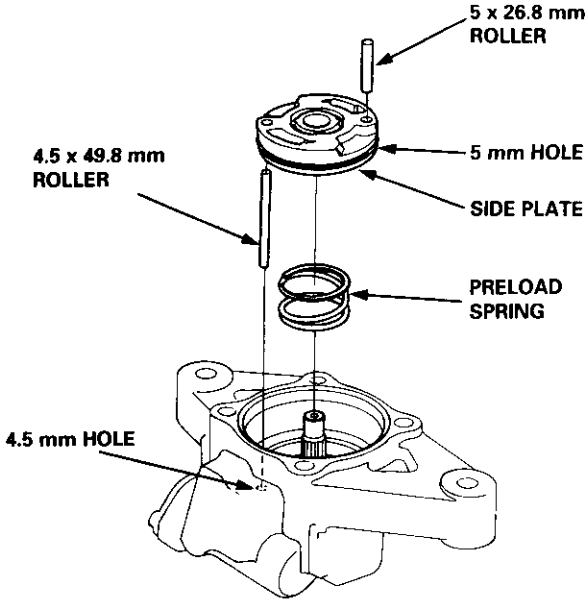

10. Assemble pump rotor to the drive shaft with the "o" mark on the rotor facing upward.

11. Set the 10 vanes in the grooves in the rotor.

    NOTE: Be sure that the round ends of the vanes are in contact with the sliding surface of the cam ring.

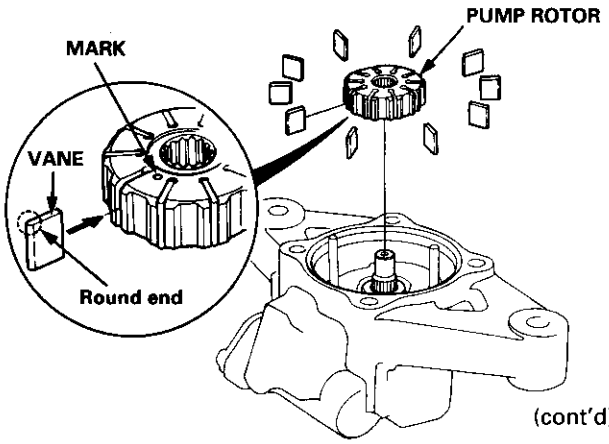

(cont'd)

Reassembly (cont'd)

12. Set the pump cam ring over the two rollers with the "8" mark on the cam ring upward.

13. Apply clean power steering fluid to the vanes and cam ring.

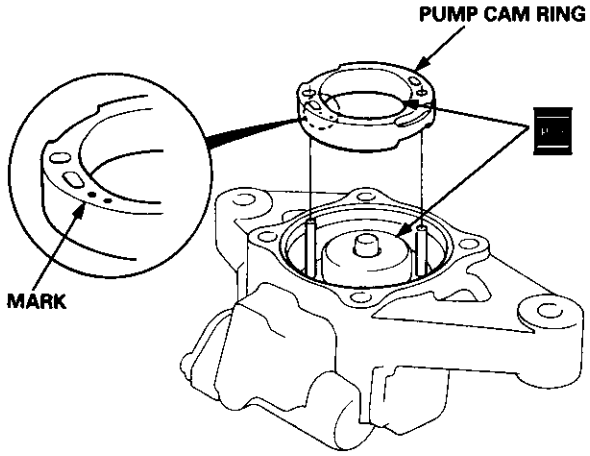

14. Install the 68.5 x 1.9 mm O-ring on the pump cover.

15. Align the roller set holes in the pump cover with the rollers.

16. Align the projection on the pump housing and the projection on the pump cover, and tighten the four bolts.

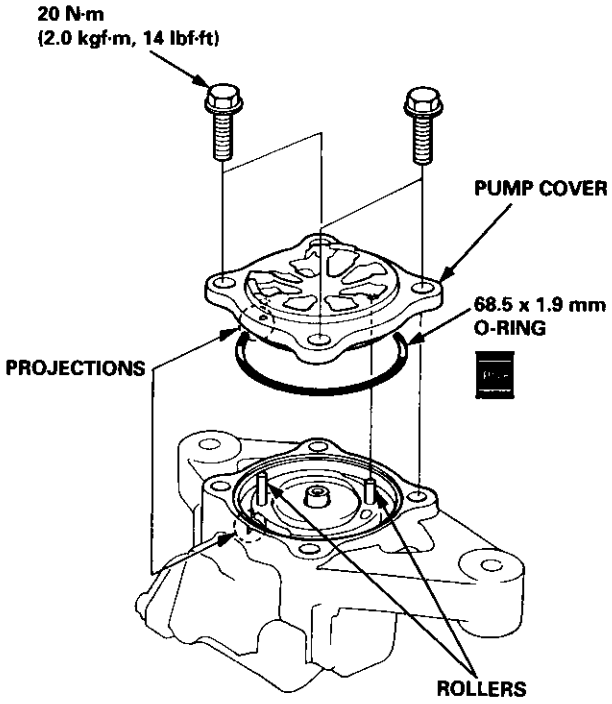

17. Set the 13 x 1.9 mm O-ring on the inlet joint.

18. Install the inlet joint on the pump housing.

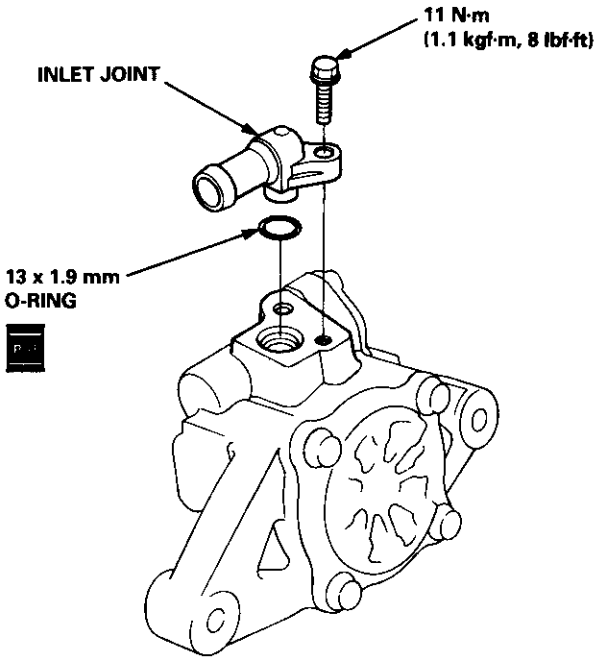

Flow Control Valve Installation

1. Apply steering grease (Honda P/N 08733 – B070E) to new O-rings.
2. Coat the flow control valve with clean power steering fluid.
3. Install the flow control valve, spring and control valve cover on the pump housing.
4. Tighten the three control cover bolts.

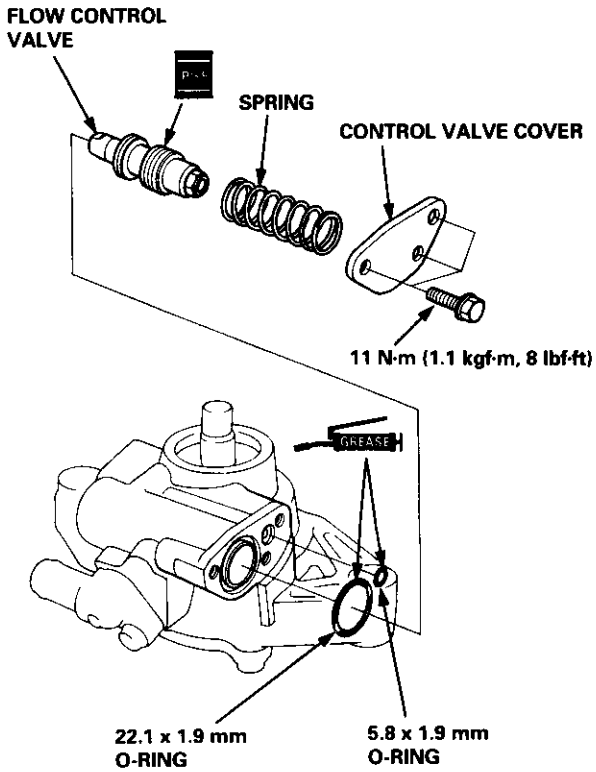

Pulley Installation

1. Hold the steering pump in a vise with soft jaws.

   CAUTION: Be careful not to damage the pump housing with the jaws of the vise.

2. Install the pump pulley as shown. Then install the pulley nut.

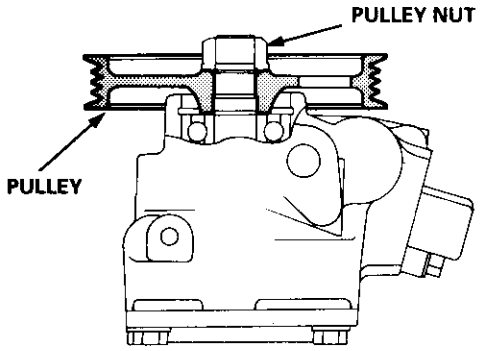

3. Hold the pulley with the special tool and tighten the pulley nut.

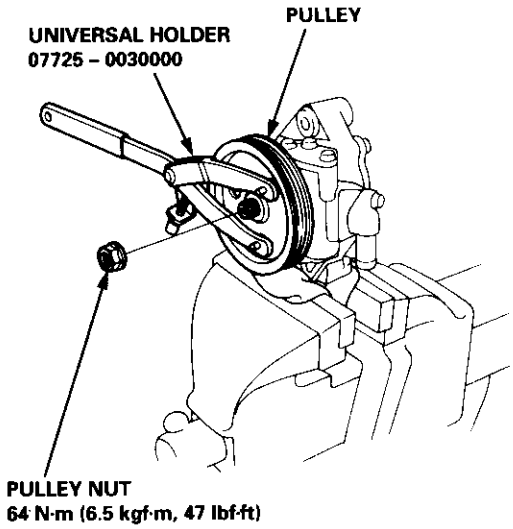

4. Check that the pump turns smoothly by turning the pulley.

Installation

1. Connect the inlet and outlet hoses. Tighten the pump fittings securely.

2. Loosely install the pump in the pump bracket with mounting bolts.

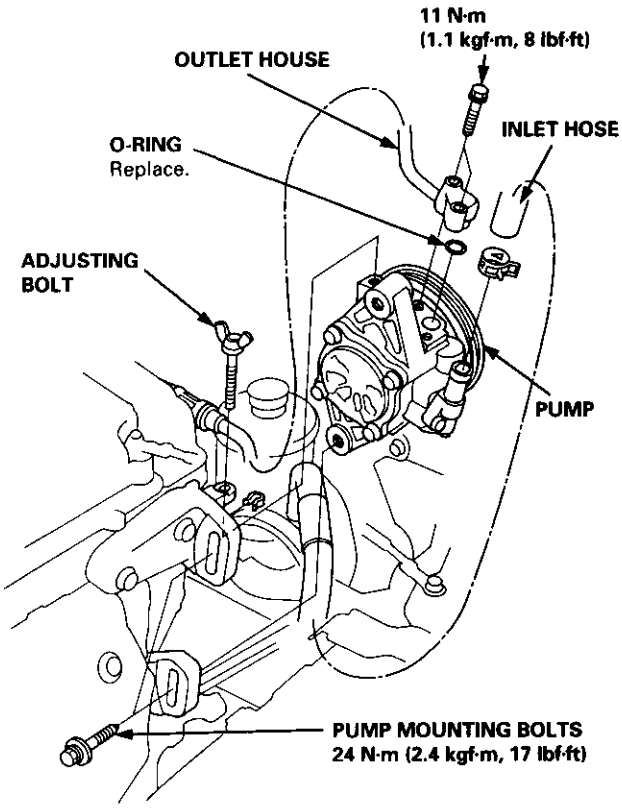

3. Install the pump belt.

CAUTION:
- **Make sure that the power steering belt is securely on the grooves of the pulleys.**
- **Do not get power steering fluid or grease in the power steering belt or pulley faces. Clean off any fluid or grease before installation.**

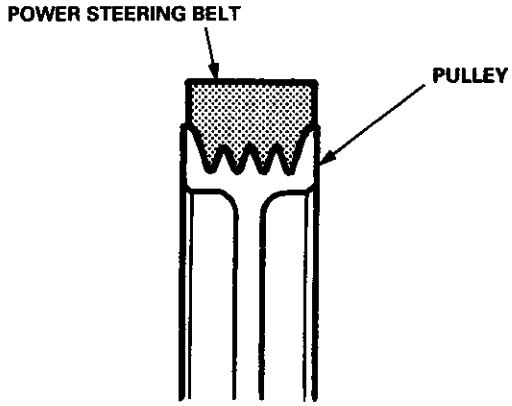

4. Adjust the pump belt (see page 17-20).

5. Fill the reservoir to the upper level line.

NOTE: Take care not to spill the fluid on the body and parts. Wipe off the spilled fluid at once.

CAUTION: Use only Genuine Honda Power Steering Fluid-V. Using other fluids such as ATF or other manufacturer's power steering fluid will damage the system.

SYSTEM CAPACITY:
1.06 liter (1.12 US.qt, 0.93 Imp.qt)
RESERVOIR CAPACITY:
0.79 liter (0.83 US.qt, 0.70 Imp.qt)

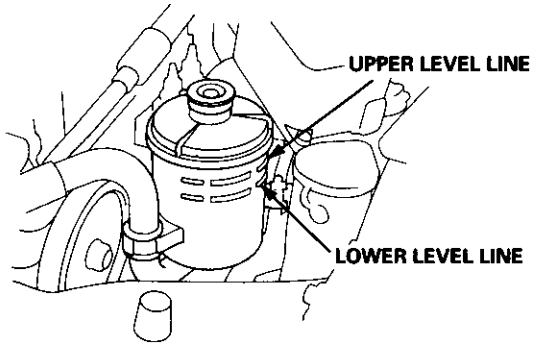

— Start the engine, let it run at idle, then turn the steering wheel lock-to-lock several times to bleed air from the system.

— Recheck the fluid level and add some if necessary.

CAUTION: Do not fill the reservoir beyond the upper level line.

Removal

NOTE: Using solvent and a brush, wash any oil and dirt off the valve body unit, its lines, and the end if the gearbox. Blow dry with compressed air.

1. Drain the power steering fluid as described on page 17-21.

2. Raise the front of car, and support on safety stands in the proper locations (see section 1).

3. Remove the front wheels.

4. Remove the steering joint cover.

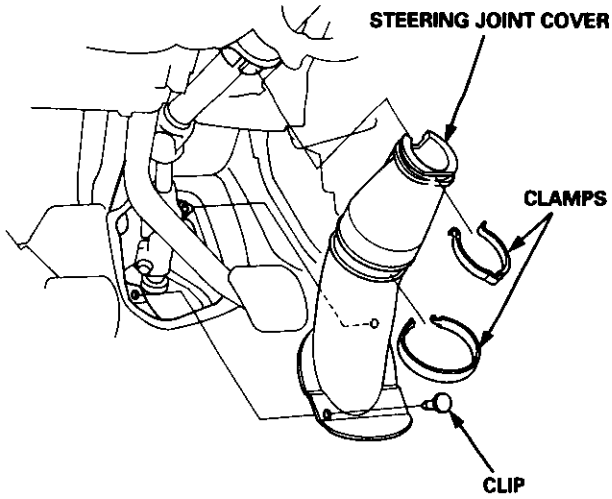

5. Remove the steering joint lower bolt, and move the joint toward the column.

   NOTE: Lock the steering shaft with the ignition key to retain the steering shaft position.

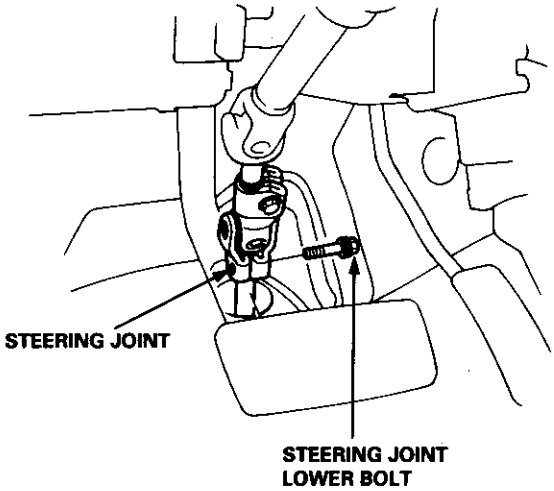

6. Remove the cotter pin from the castle nut and remove the nut.

7. Install the 10 mm hex nut on the ball joint.
   Be sure that the 10 mm hex nut is flush with the ball joint pin end, or the threaded section of the ball joint pin might be damaged by the ball joint remover.

   NOTE: Remove the ball joint using the Ball Joint Remover, 28 mm (07MAC – SL00200). Refer to page *18-11 for how to use the ball joint remover.*

8. Separate the tie-rod ball joint and knuckle using the special tool.

   CAUTION: Avoid damaging the ball joint boot.

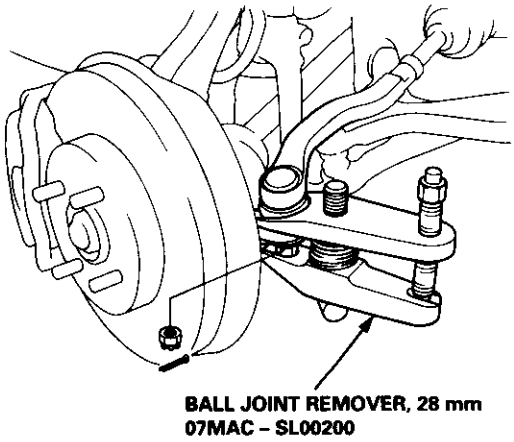

9. Disconnect the shift linkage (M/T model: see section 13, A/T model: see section 14).

10. Disconnect the heated oxygen sensor (H02S) connector, and separate the three way catalytic converter by removing the self-locking nuts.

    NOTE: Always replace the gaskets with new ones.

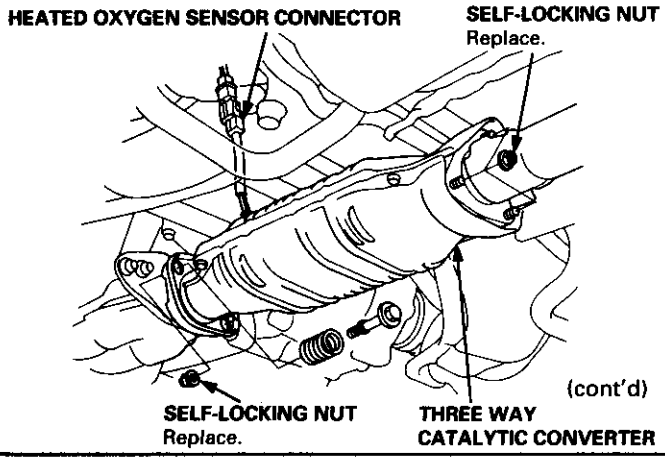

(cont'd)

Removal (cont'd)

11. Remove the return pipe clamp from the left side of the rear beam, and move the return pipe above the steering gearbox.

12. Remove the rear beam brace.

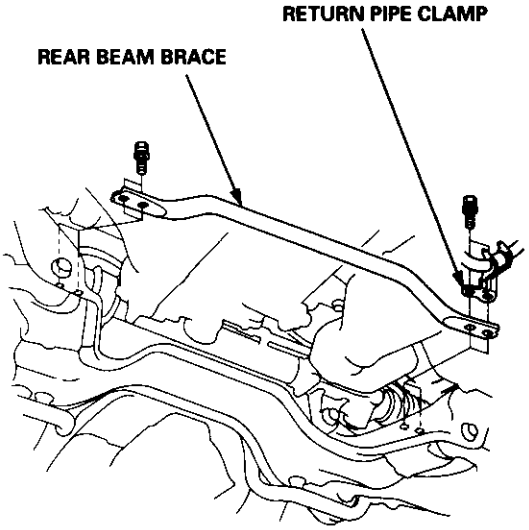

13. Remove the left tie-rod end, then slide the rack all the way to the right.

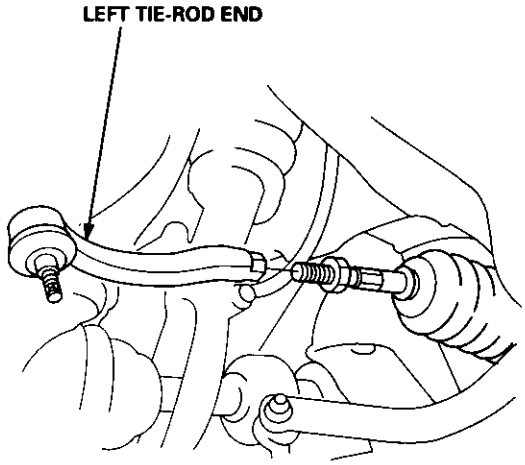

14. Disconnect the two lines from the valve body unit on the steering gearbox.

CAUTION: After disconnecting the hose and pipe, plug or seal the hose and pipe with a piece of tape or equivalent to prevent foreign materials from entering the valve body unit.

NOTE:
- Place the pipe disconnected in the previous step at the rear side of the gearbox so that they do not hinder in the gearbox removal.
- Do not loosen the cylinder pipes A and B between the valve body unit and cylinder.

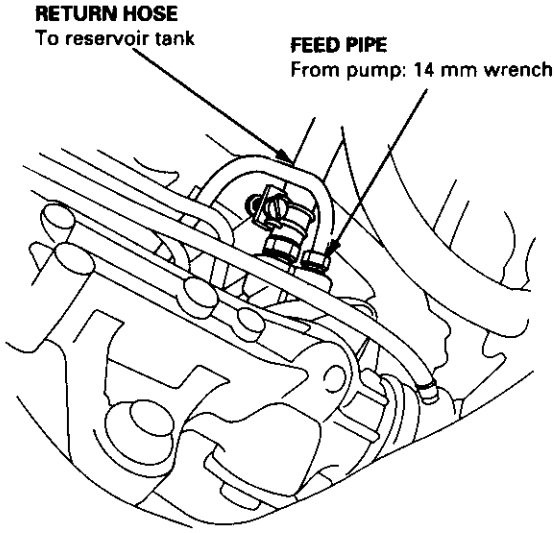

15. Remove the steering gearbox mounting bolts.

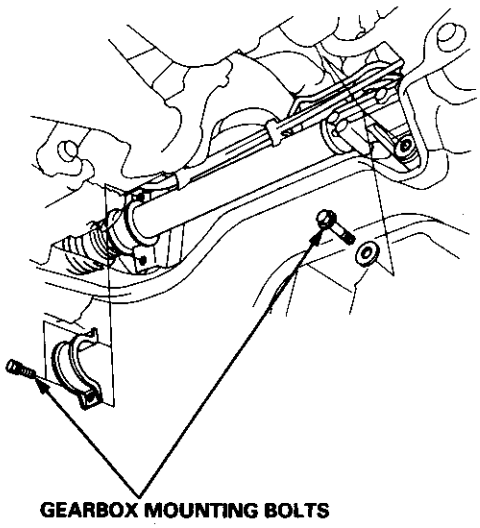

16. Pull the steering gearbox all the way down to clear the pinion shaft from the bulkhead, and remove the pinion shaft grommet.

17. Move the steering gearbox to the right so the left rack end clears the rear beam.

18. Hold the steering gearbox and slide the rack all the way to the left, then place the left rack end below the rear beam.

19. Move the steering gearbox to the left, and tilt the left side down to remove it from the car.

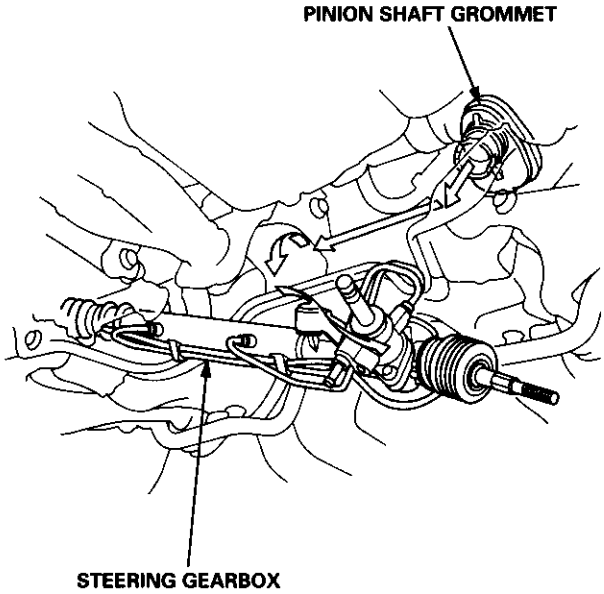

Disassembly

Steering Rack Disassembly

NOTE:
- Before disassembling the gearbox, wash it off with solvent and a brush.
- Do not dip seals and O-rings in solvent.

1. Remove the steering gearbox (see page 17-45).
2. Remove the air hose and clips.
3. Remove the tie-rod end and locknut.

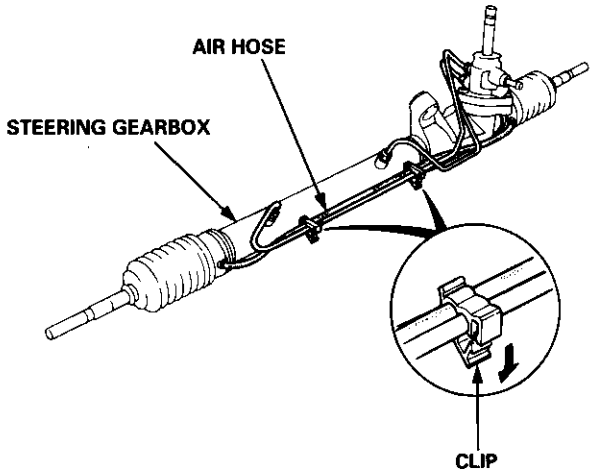

4. Remove the boot bands and tube clamps. Pull the boots away from the ends of the gearbox.

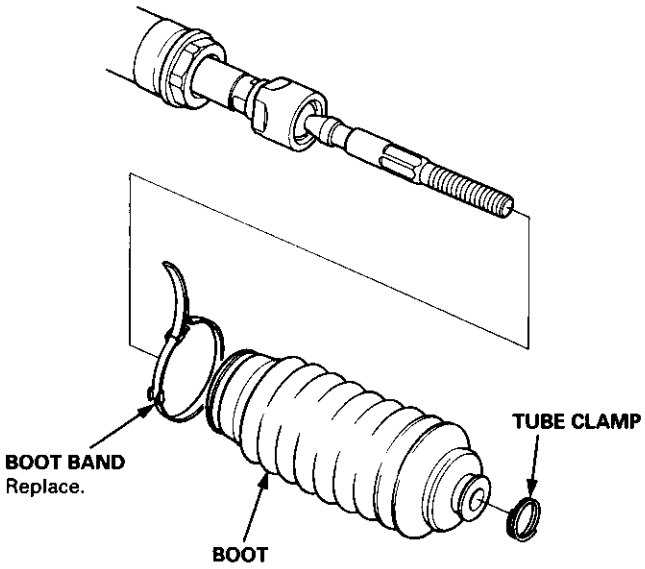

5. Hold the steering rack with a wrench and unscrew the rack end with a wrench.

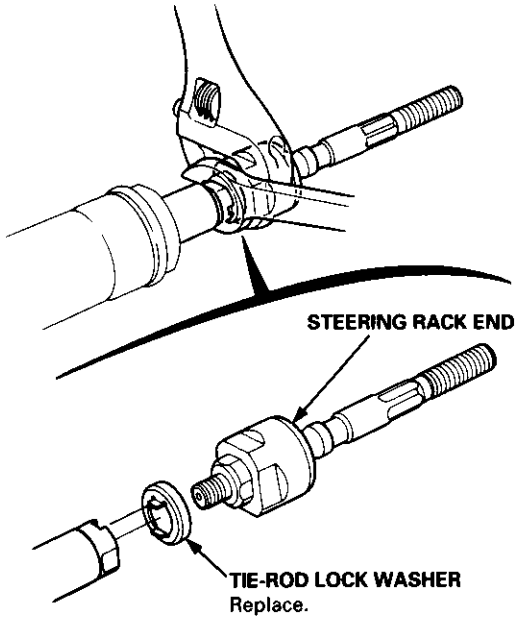

6. Loosen the locknut and remove the rack guide screw.
7. Remove the spring and rack guide from the gear housing.

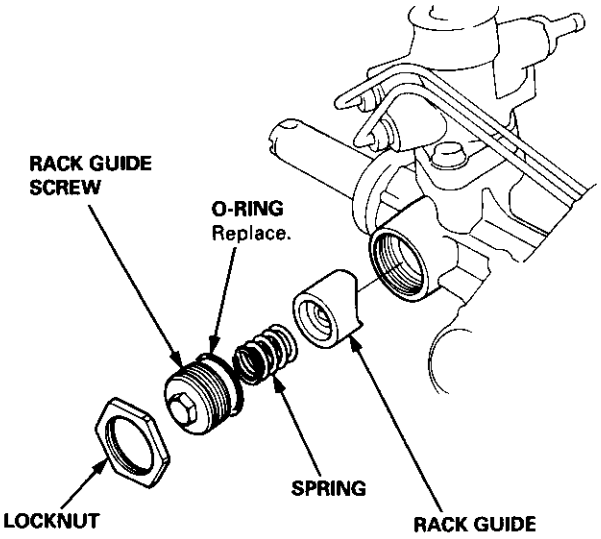

8. Remove the cylinder pipe A and B from the gearbox.

9. Drain the fluid from the cylinder fittings by moving the steering rack back and forth.

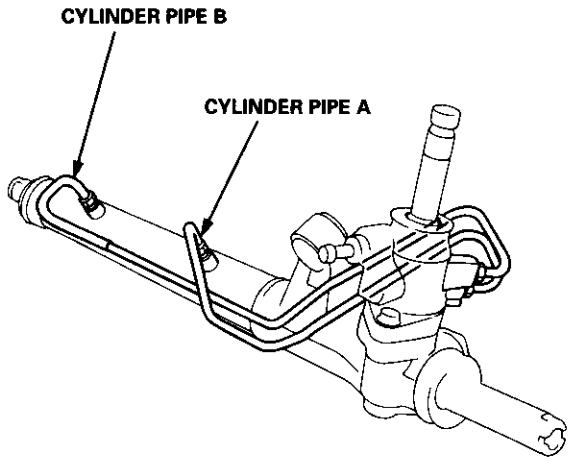

10. Remove the two flange bolts, then remove the valve body unit from the gearbox. (See page 17-51 for valve body unit disassembly.)

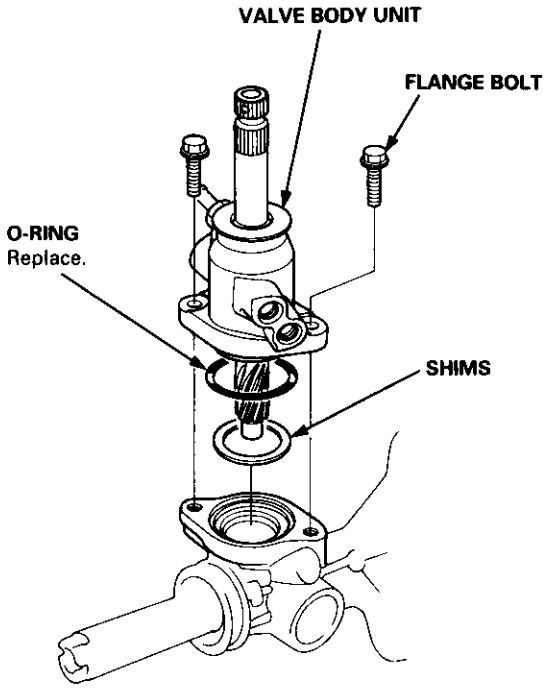

11. Drill a 3 mm (0.12 in) diameter hole approximately 2.5 – 3.5 mm (0.10 – 0.14 in) in depth in the staked-point on the cylinder.

NOTE: Do not allow metal shavings to enter the cylinder housing.

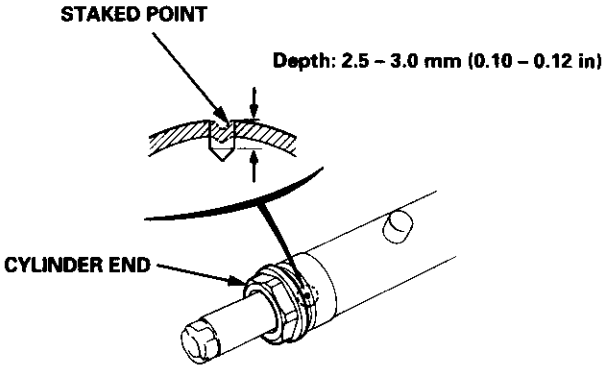

12. Install a puller yoke to the steering gearbox. Clamp the puller yoke in a vise with soft jaws as shown, then loosen and remove the cylinder end.

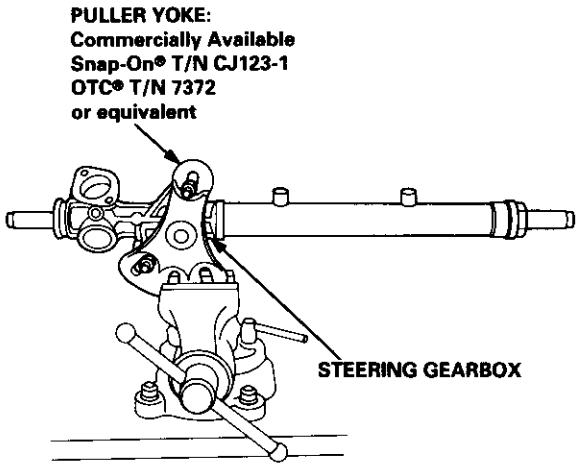

(cont'd)

Disassembly (cont'd)

13. Set the gearbox in a press so the gear housing points upward.

14. Install the flange bolt into the end of the steering rack until it bottoms in the hole, then back the flange bolt out 1/4 turn. Hold the flange bolt and tighten the flange nut against the rack by hand.

15. Press the cylinder end seal and steering rack out of the gearbox.

    NOTE: Hold the steering rack to keep it from falling when pressed clear.

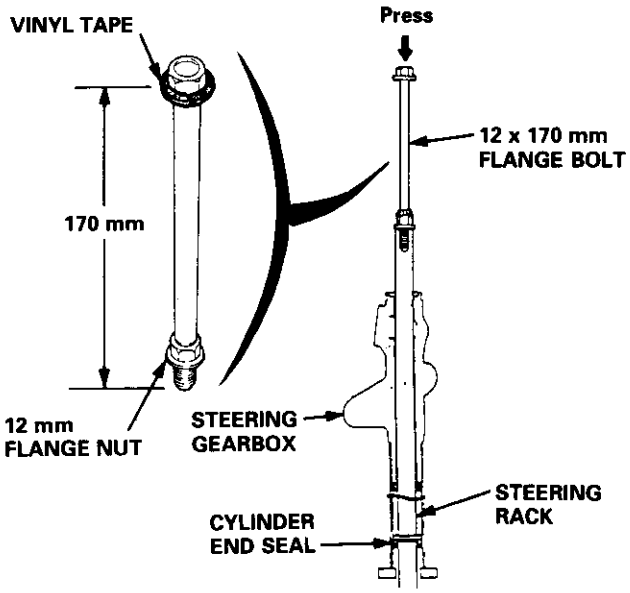

16. Remove the special tool and cylinder end seal from the steering rack.

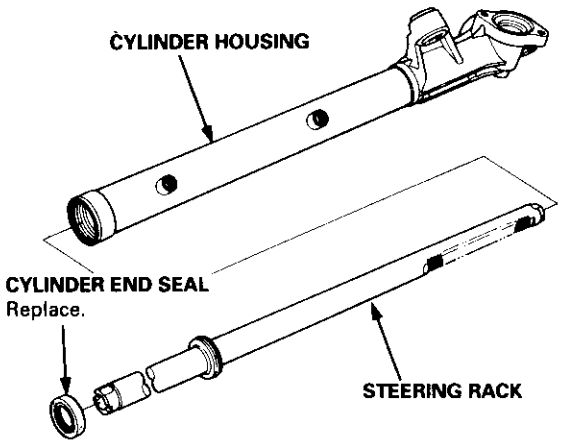

17. Remove the 12 mm bolt and nut from the steering rack, then install a 24" long, 3/8" drive extension, and the special tool into the cylinder from the gearbox side.

    CAUTION: Be careful not to damage the inside surface of the housing with the tools.

18. Set the gearbox in a press, then press out the cylinder end seal and backup ring from the gearbox.

    CAUTION:
    - **Keep the tool straight to avoid damaging the cylinder wall. Check the tool angle, and correct if necessary, when removing the cylinder end seal.**
    - **Use a press to remove the cylinder end seal. Do not try to remove the seal by striking the tool. It will break the backup ring and the cylinder end seal will remain in the gearbox.**

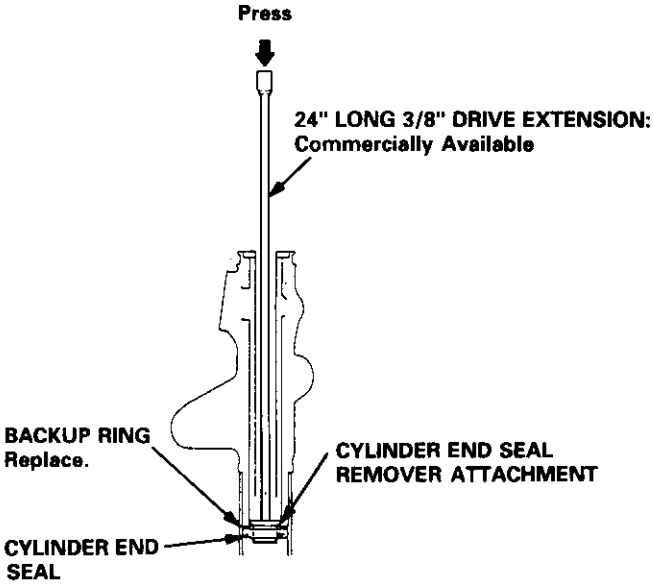

19. Carefully pry the piston seal ring and O-ring off the piston of the rack.

    CAUTION: Be careful not to damage the inside of seal ring groove when removing the seal ring.

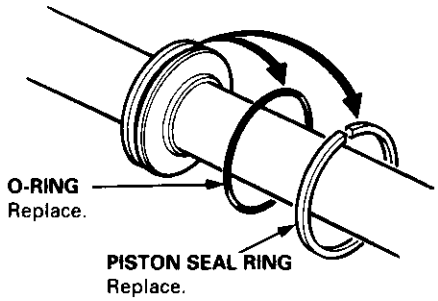

20. Apply vinyl tape to the pinion shaft.

21. Separate the valve housing from the pinion shaft/ valve using a press.

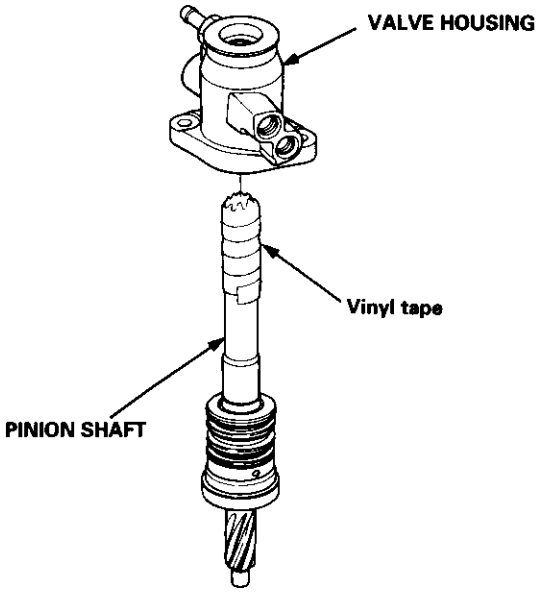

22. Check the inner wall of the valve housing where the seal ring slides with your finger. If there is a step in the wall, the valve housing is worn. Replace the valve housing.

NOTE:
- There may be the sliding marks from the seal ring on the wall of the valve housing. Replace the valve housing only the wall is stepped.
- When the valve housing is replaced, install new 32 mm shim(s) on the bearing surface of the housing to adjust the thickness.

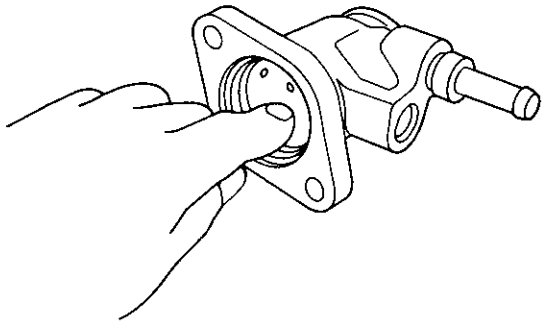

23. Check for wear, burrs and other damage to the edges of the grooves in the sleeve.

NOTE: The pinion shaft and sleeve are a precision matched set. If either the pinion shaft or sleeve must be replaced, replace the both parts as a set.

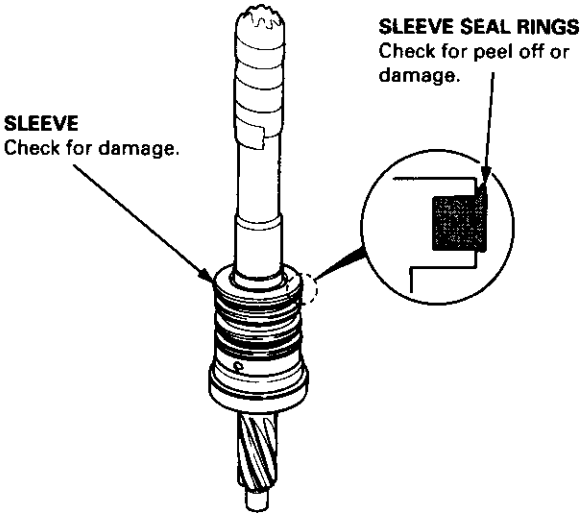

24. Remove the circlip and pinion shaft sleeve from the pinion shaft.

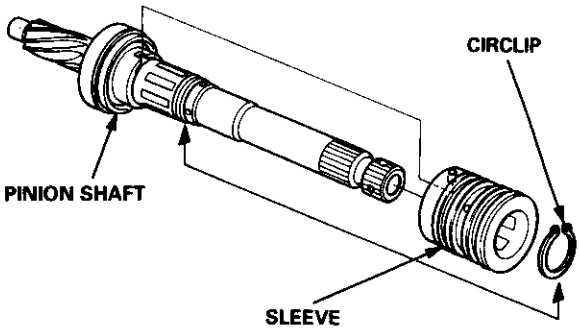

(cont'd)

Disassembly (cont'd)

25. Using a cutter or an equivalent tool, cut and remove the four seal rings from the sleeve.

CAUTION: Be careful not to damage the edges of the sleeve grooves when removing the seal rings and O-ring.

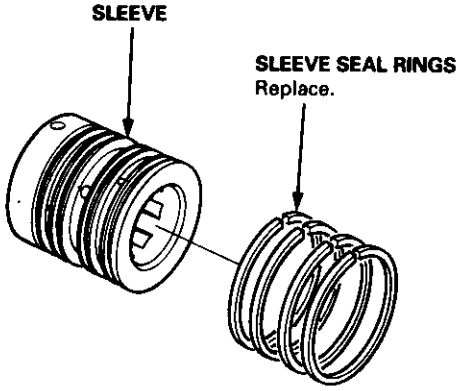

26. Using a cutter or an equivalent tool, cut the valve seal ring and O-ring at the groove the pinion shaft. Remove the valve seal ring and O-ring.

CAUTION: Be careful not to damage the edges of the pinion shaft groove when removing the valve seal ring and O-ring.

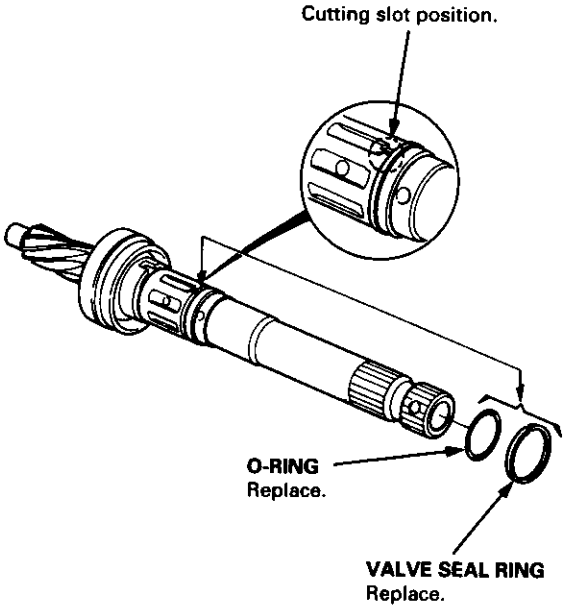

27. Remove the valve oil seal and backup ring from the pinion shaft.

NOTE:
- Inspect the ball bearing by rotating the outer race slowly. If there is excessive play, replace the pinion shaft and sleeve as an assembly.
- The pinion shaft and sleeve are a precise fit; do not intermix old and new pinion shafts and sleeves.

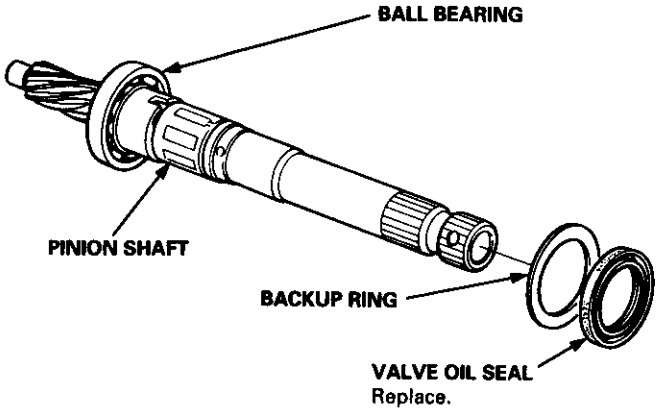

28. Press the valve oil seal and roller bearing out of the valve housing using a hydraulic press and special tool shown below.

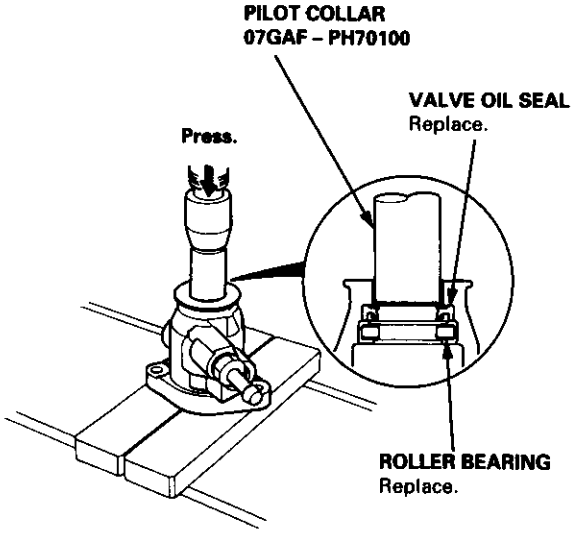

Reassembly

NOTE:

- Clean the disassembled parts with a solvent and dry them with compressed air. Do not dip the rubber parts in a solvent.
- Always replace the O-rings and rubber seals with new ones before assembly.
- Apply power steering fluid or steering grease (HONDA P/N: 08733 – B070E) to the parts indicated in the assembly procedures.
- Do not allow dust, dirt, or other foreign materials to enter the power steering system.
- Use the appropriate special tools where necessary.

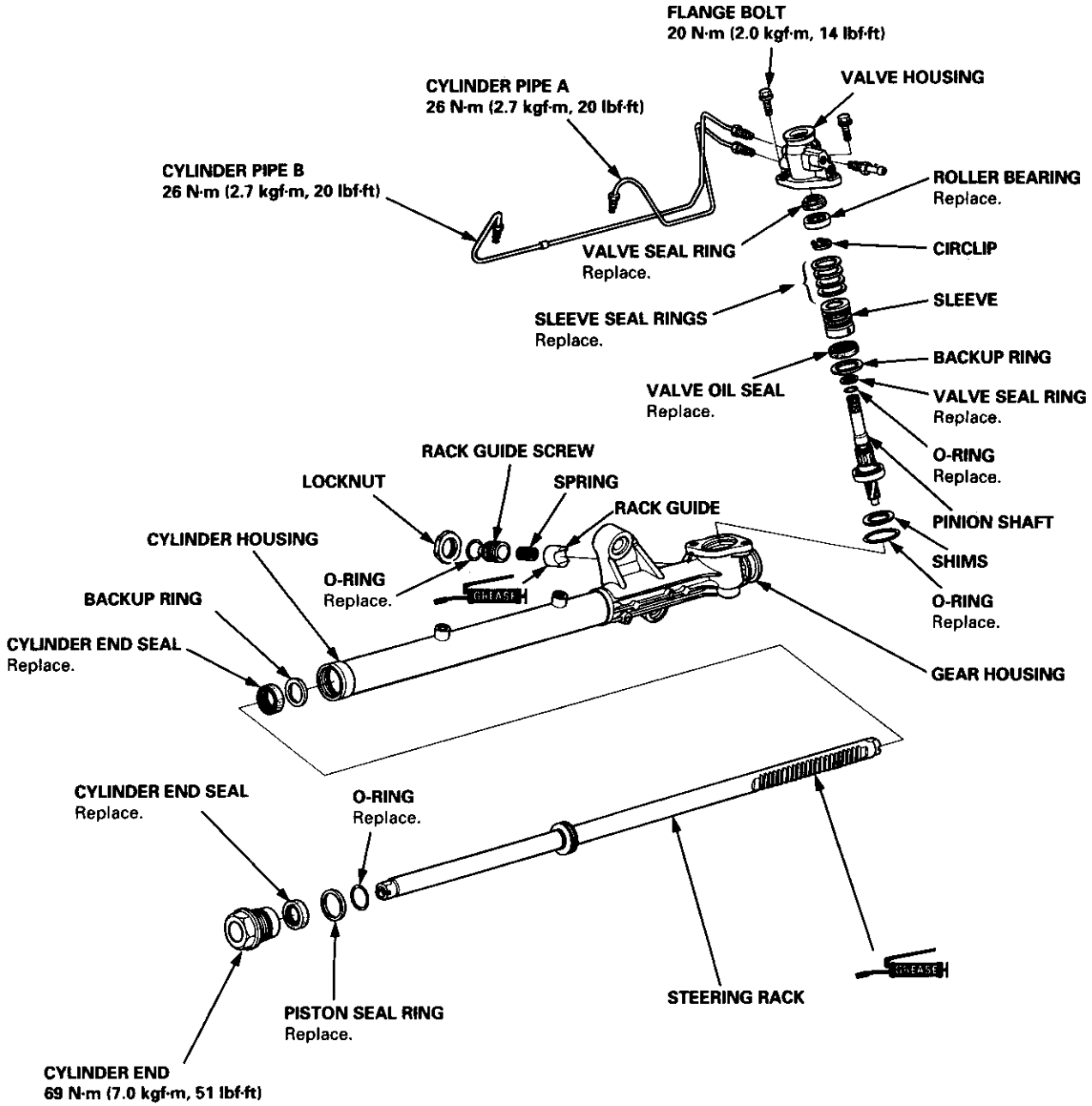

(cont'd)

Reassembly (cont'd)

Valve Body Reassembly

1. Apply vinyl tape to the stepped portion of the pinion shaft, and coat the surface of the vinyl tape with the power steering fluid.
2. Install the backup ring with its tapered side as shown below.
3. Coat the inside surface of the new valve oil seal with power steering fluid.
4. Slide the valve oil seal over the pinion shaft, being careful not to damage the sealing lip.

CAUTION: Install the valve oil seal with its grooved side facing opposite the bearing.

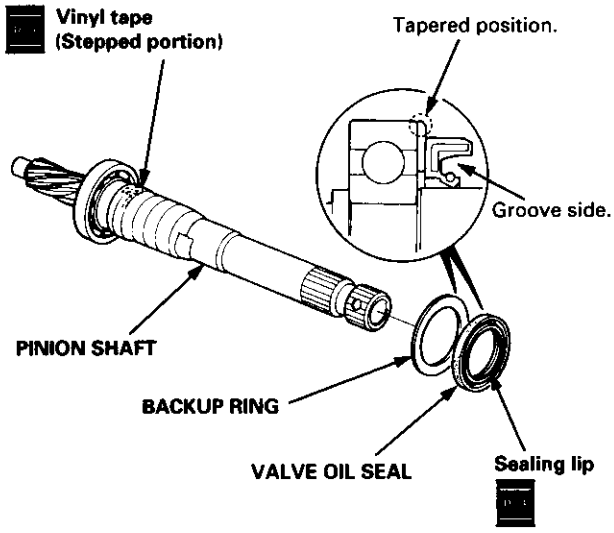

5. Fit the new O-ring in the groove of the pinion shaft. Then slide the new valve seal ring over the shaft and groove in on the pinion shaft.
6. Remove the vinyl tape from the pinion shaft.

NOTE: Do not over – expand the valve seal ring.

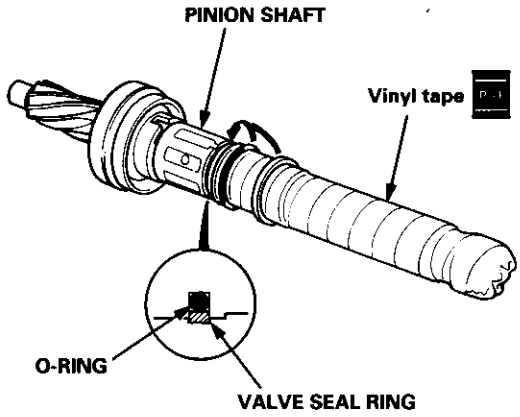

7. Apply power steering fluid to the surface of the valve seal ring that was installed on the pinion shaft.
8. Apply power steering fluid to the inside of the special tool. Set the larger diameter end of the special tool over the valve seal ring.
9. Move the special tool up and down several times to make the valve seal ring fit in the pinion shaft.
10. Remove the special tool.
11. Turn the special tool over and set the smaller diameter end of the special tool over the valve seal ring. Move the special tool up and down several times to make the valve seal ring snugly fit in the pinion shaft.

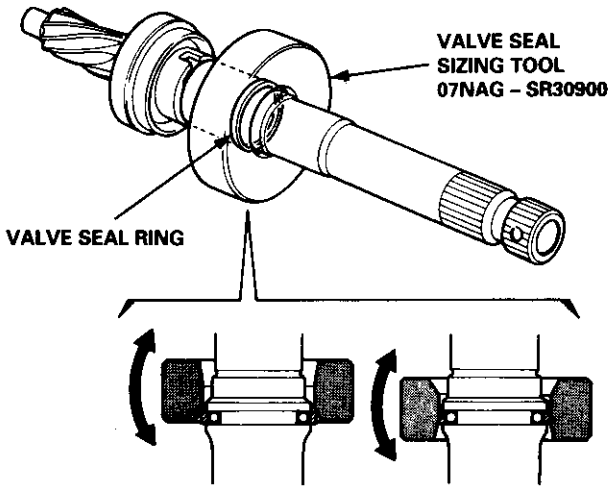

Use the wider diameter end of the special tool first to make the valve seal ring fit in the pinion shaft.

Make the valve seal ring snugly fit in the pinion shaft using the other end (smaller diameter end) of the special tool.

12. Apply power steering fluid to the surface of the special tool. Set the new seal rings over the special tool from the smaller diameter end of the tool, and expand the seal rings. Do two rings at a time from each end of the sleeve.

    NOTE:
    - Do not over-expand the seal ring. Install the resin seal rings with care so as not to damage them. After installation, be sure to contract the seal rings using the special tool (sizing tool).
    - There are two types of sleeve seal rings: black and brown. Do not mix the different types of sleeve seal rings as they are not compatible.

13. Set the special tool in the grooves in the sleeve, and set each ring in each groove securely.

    NOTE: After installation, compress the seal rings with your fingers temporarily.

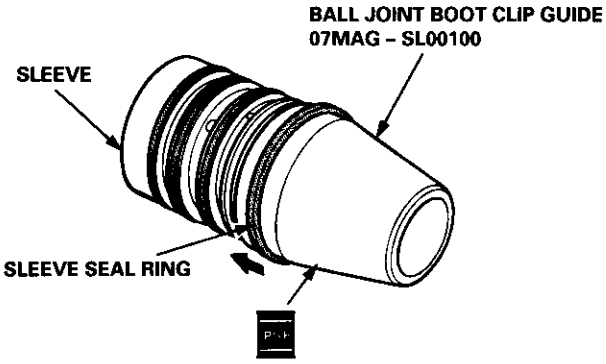

14. Apply power steering fluid to the seal rings on the sleeve and to the entire inside surface of the special tool.
15. Insert the sleeve into the special tool slowly.
16. Move the sleeve each direction several times to make the seal rings snugly fit in the sleeve.

    NOTE: Be sure that the seal rings are not turned up.

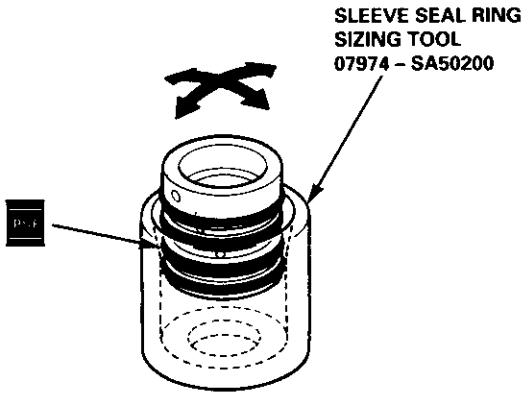

17. Apply power steering fluid to the surface of the pinion shaft, then assemble the sleeve over the pinion shaft, aligning the locating pin on the inside of the sleeve with the cutout in the shaft.

    NOTE: Be careful not to damage the valve seal ring when inserting the sleeve.

18. Install the circlip securely in the pinion shaft groove.

    NOTE: Install the circlip with its tapered side facing out.

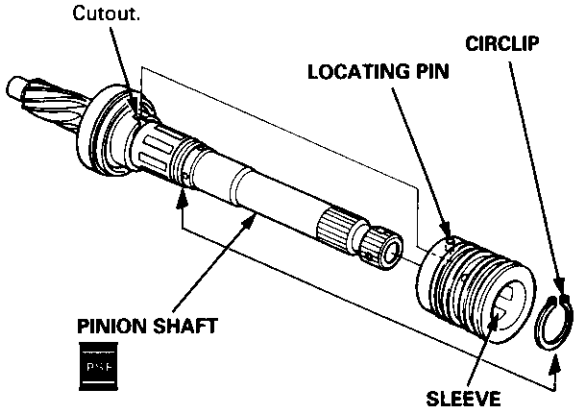

19. Apply power steering fluid to the seal ring lip of the valve oil seal. Then install the seal in the valve housing using a hydraulic press and special tools as shown.

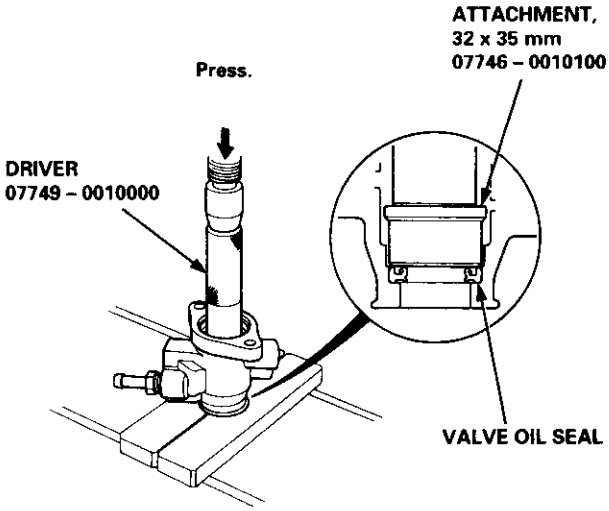

(cont'd)

Reassembly (cont'd)

20. Press the new roller bearing into the valve housing using a hydraulic press and special tool as shown.

    NOTE: Place the roller bearing on the valve housing with its letter stamped facing up towards the valve side.

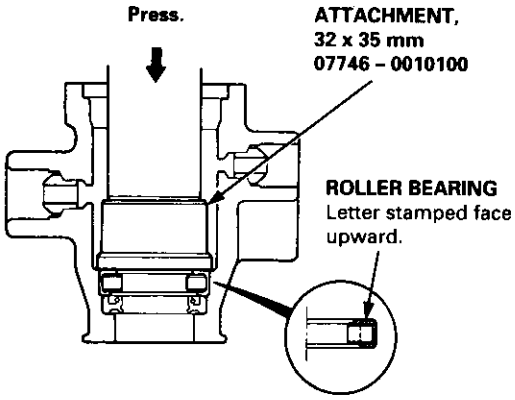

21. Apply vinyl tape to the pinion shaft, then coat the vinyl tape with power steering fluid.

22. Insert the pinion shaft into the valve housing.

    CAUTION: Be careful not to damage the valve seal rings.

23. Remove the vinyl tape from the pinion shaft.

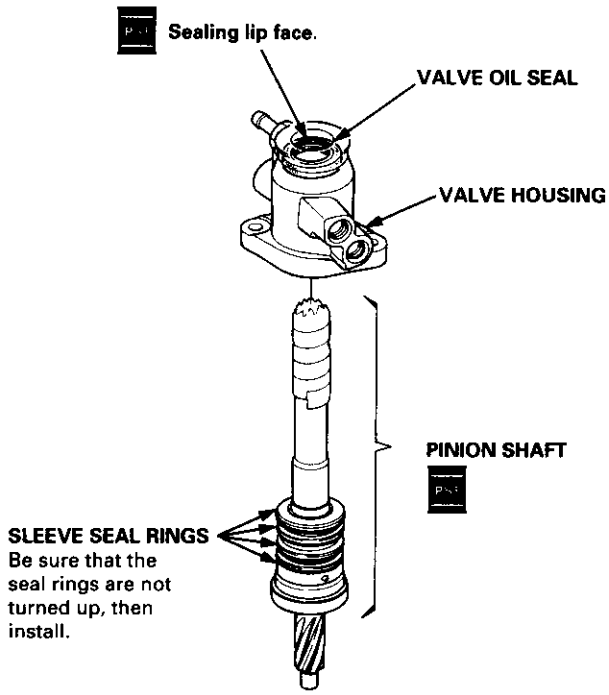

24. Press the pinion shaft/sleeve using a hydraulic press as shown.

    CAUTION: Before inserting the pinion shaft, be sure that the backup ring is centered with the pinion shaft bearing.

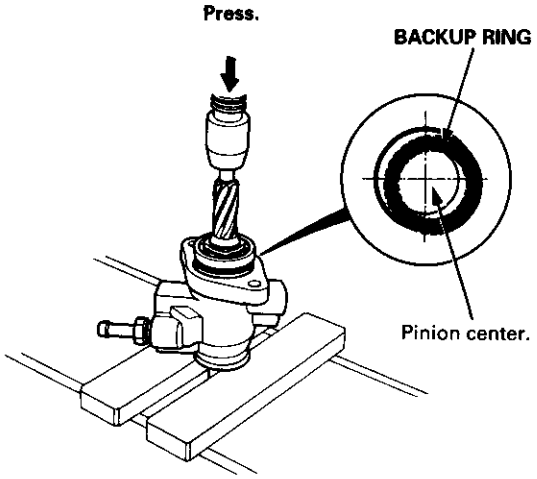

25. Coat the piston seal ring guide with power steering fluid, and slide it onto the rack, big end first.

26. Position the new O-ring and new piston seal ring on the special tool, then slide them down towards big end of the tool.

NOTE:
- Do not over expand resin seal rings. Install the resin seal ring with care so as not to damage them. After installation, be sure to contract the seal ring using the special tool (sizing tool).
- Replace piston's O-ring and seal ring as a set.

27. Pull the O-ring off into the piston groove, then pull the piston seal ring off into the piston groove on top of the O-ring.

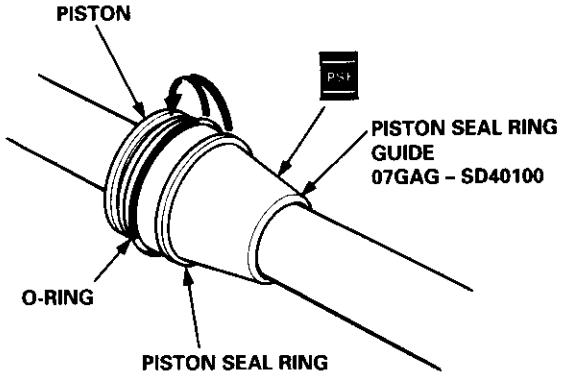

28. Coat the piston seal ring and inside of the special tool with power steering fluid.

29. Carefully slide the tool onto the rack and over the piston seal ring.

30. Move the special tool back and forth several times to make the piston seal ring fit snugly in the piston.

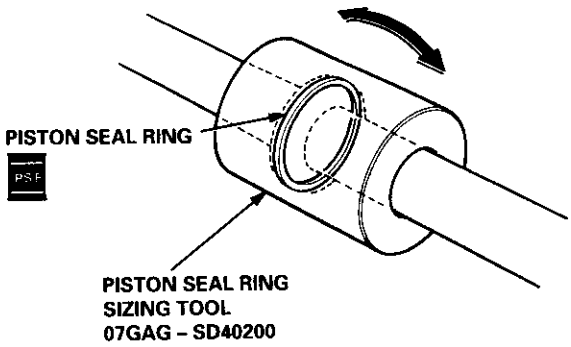

31. Coat the sliding surface of the special tool and new cylinder end seal with power steering fluid.

32. Place the seal on the special tool with its grooved side facing opposite the special tool.

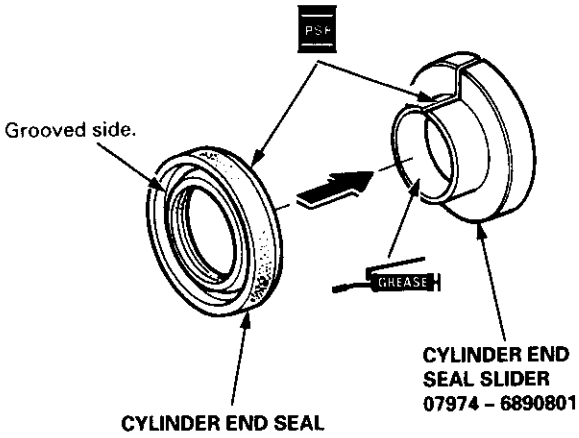

33. Apply a thin coat of grease to the inside of the special tool, and install it on the steering rack.

CAUTION: Make sure the rack teeth do not face the slot in the special tool.

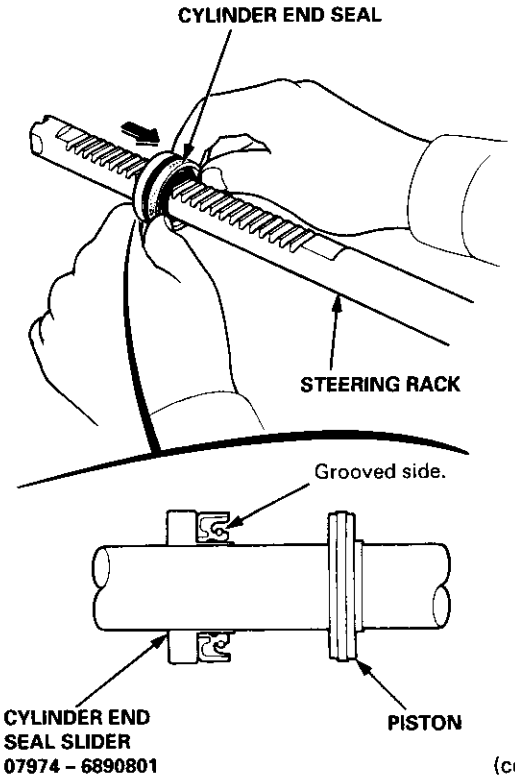

(cont'd)

Reassembly (cont'd)

34. Separate the cylinder end seal from the special tool, then remove the tool from the steering rack.

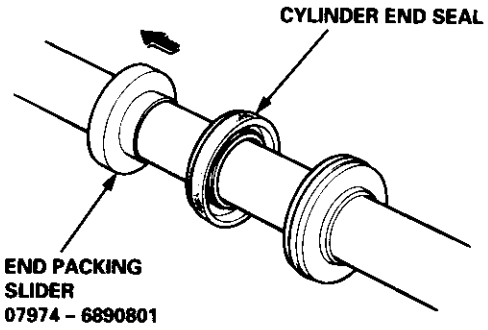

35. Install the backup ring on the steering rack, then place the cylinder end seal to piston.

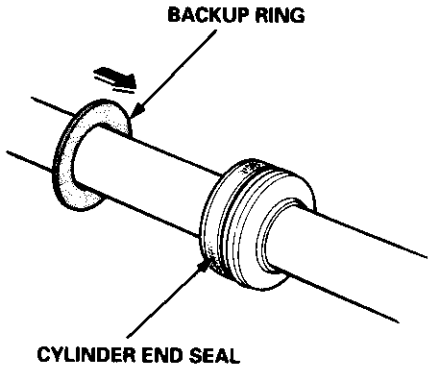

36. Grease the steering rack teeth, then insert the steering rack into the gear housing.

CAUTION: Be careful not to damage to inner surface of the gear housing with the rack edges.

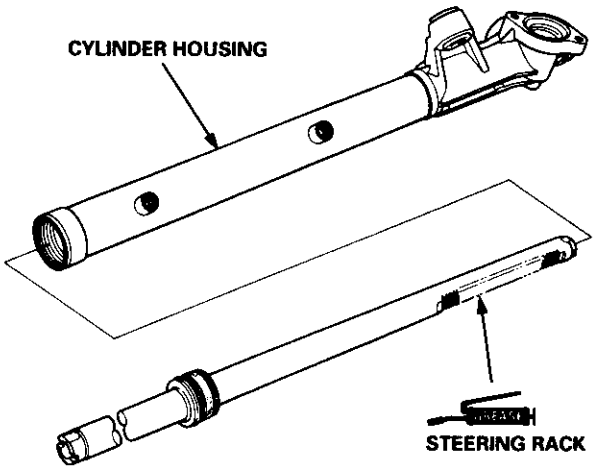

37. Set the gearbox in a press with the cylinder housing facing upward.
38. Install the flange bolt into the end of the steering rack until it bottoms in the hole, then back the flange bolt out 1/4 turn. Hold the flange bolt and tighten the flange nut against the rack by hand.
39. Install the cylinder end seal into the bottom of the cylinder by pressing on the bolt with a press as shown.
CAUTION: Do not push on the bolt with excessive force; as it may damage the cylinder end seal.

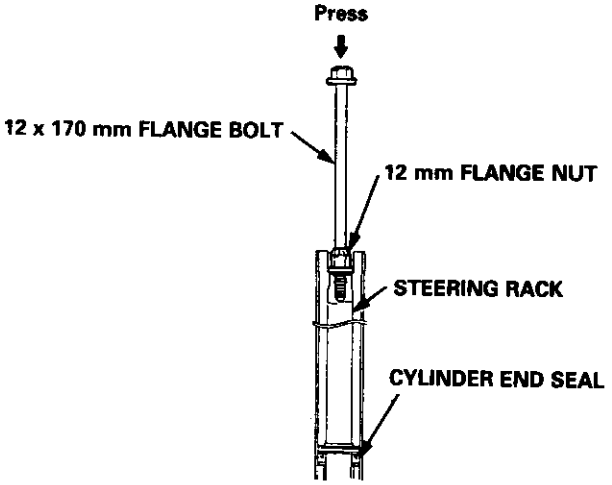

40. Remove the flange bolt and center the steering rack.
41. Install the special tool or vinyl tape onto the end of the steering rack, then coat the special tool or vinyl tape with power steering fluid.
42. Coat the inside surface of the new cylinder end seal with power steering fluid.
43. Install the cylinder end seal onto the steering rack with its grooved side toward the piston.
44. Remove the special tool. Push in the cylinder end seal with finger.
NOTE: Take care not to damage the cylinder end seal with the threads and burrs at the staked position of the gearbox.

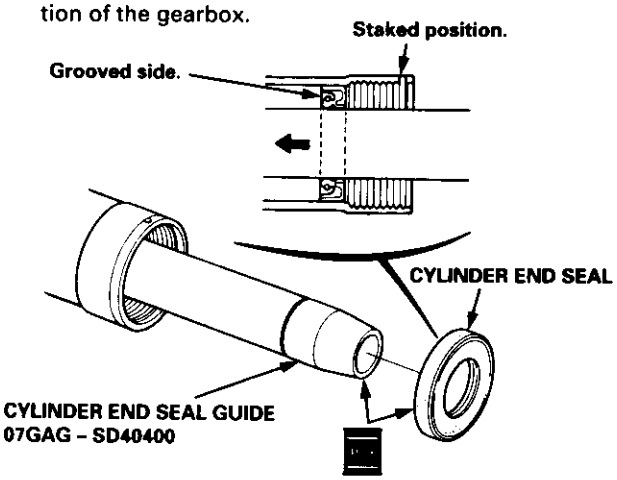

45. Install a puller yoke to the steering gearbox, then clamp the puller yoke in a vise with soft jaws as shown.

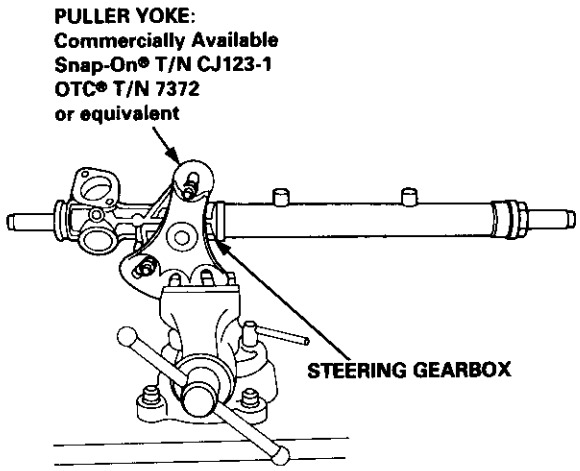

46. Grease the inside surface of the cylinder end, then install the cylinder end by screwing it into the cylinder housing.

47. After tightening the cylinder end, stake the point of the cylinder housing shown below.
NOTE: Stake in the cylinder in the position opposite from where the stake was removed during disassembly.

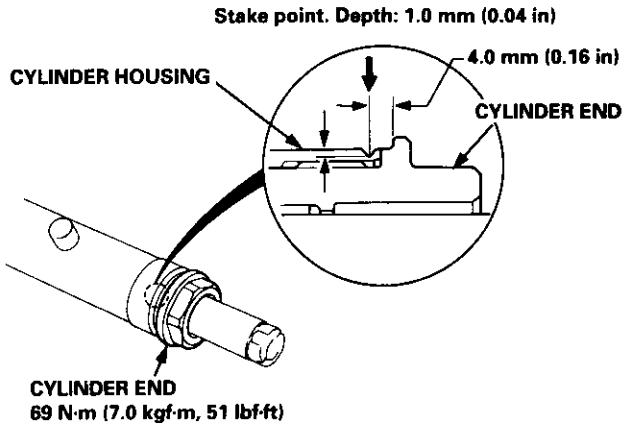

48. Select the 32 mm shim(s).

NOTE: Only reinstall the original 32 mm shim(s) when the steering gearbox is reassembled without replacing the pinion shaft, valve housing, and gearbox housing with new ones.
If the pinion shaft, valve housing, and gearbox housing are replaced, select the new shim(s) as follows.

Shim selection:

-1. Set the four 32 mm shims on the bearing surface of the gearbox housing. Total thickness of the four shims should equal no more than 0.70 mm.
Shim set: four 32 mm shims (Thickness: 0.10 mm, 0.15 mm, 0.20, 0.25 mm respectively)

CAUTION: The four 32 mm shims do not have thickness identification marks. Measure the thickness of each shim using a micrometer, and mark the shim for identification.

-2. Install the valve body unit on the gearbox, and tighten the flange bolts to the specified torque.

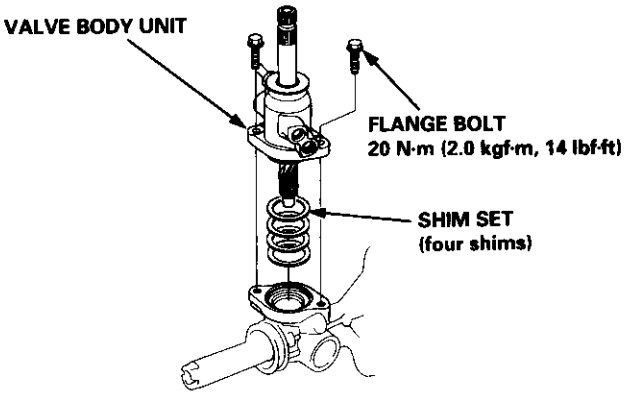

-3. Measure the clearance between the gearbox and valve body unit using a feeler gauge as shown.
NOTE: Measure the clearance at the point midway between the two mounting bolts.

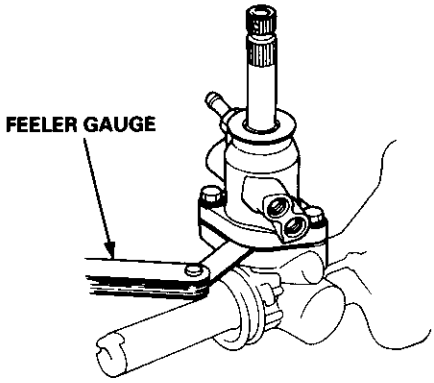

(cont'd)

Reassembly (cont'd)

-4. Determine the required thickness of the 32 mm shims by subtracting the clearance obtained in the step -3 from the total thickness of the four shims.
(Total thickness of the 4 shims) - (Clearance) = Required thickness of the shims

NOTE: Select the shims so that the total thickness is close to, but less than the required thickness.

Example:
Measurement is 0.28 mm (0.011 in):
0.70 - 0.28 = 0.42 mm (0.028 - 0.011 = 0.017 in)

The selected shims should be 0.25 mm (0.010 in) and 0.15 mm (0.006 in) in thickness.

If the required shim thickness is 0.10 mm or less, no shims are necessary.

49. Set the selected 32 mm shims on the bearing surface of the gearbox housing.
50. Coat the new O-ring with grease and install it in the groove in the gearbox housing.
51. Apply grease to the needle bearing in the gearbox housing.
52. Install the valve body unit on the gearbox housing by engaging the gears.

NOTE: Note the valve body unit installation position (direction of pipe connection).

53. Tighten the flange bolts to the specified torque.

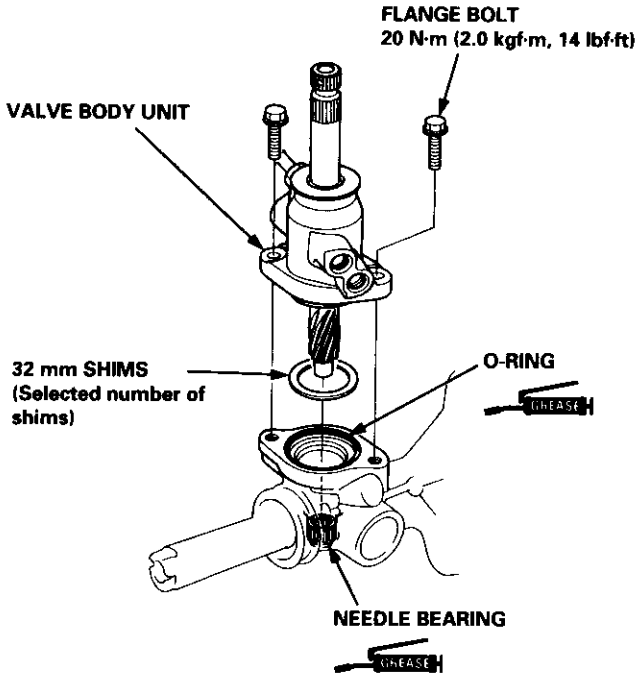

54. Install the cylinder pipes A and B.

NOTE:
- Clean the joints of the cylinder pipe A and B thoroughly. The joints must be free of foreign material.
- Install the cylinder pipe A and B by tighting the flare nuts by hand first, then tighten the flare nuts to the specified torque starting with the cylinder side nuts.

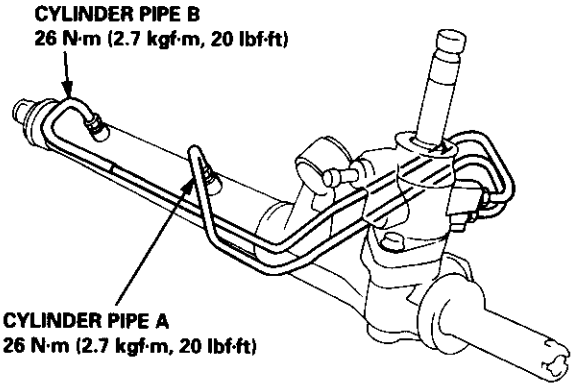

55. Grease the sliding surface of the rack guide and install it onto the gear housing.
56. Apply a thin coat of grease to the new O-ring and install it on the rack guide screw.
57. Install the spring, rack guide screw and locknut on the gear housing.
58. Adjust the rack guide screw (see page 17-21).

NOTE: After adjusting, check that the rack moves smoothly by sliding to rack right and left.

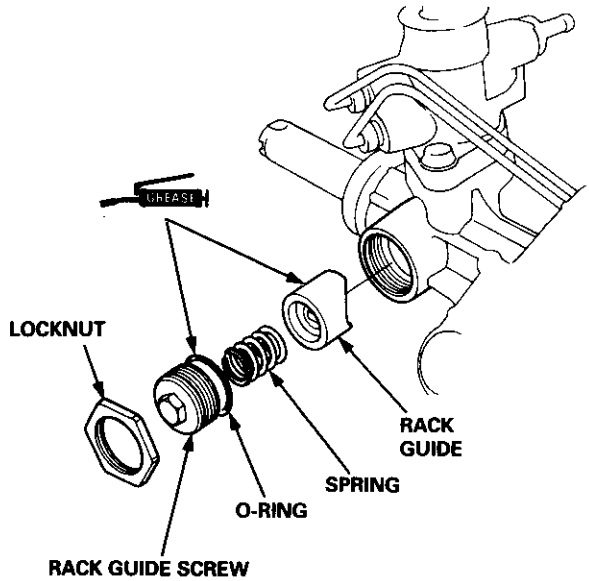

59. Install the new lock washer in the groove in the steering rack.

60. Hold the steering rack with a wrench and tighten the rack end.

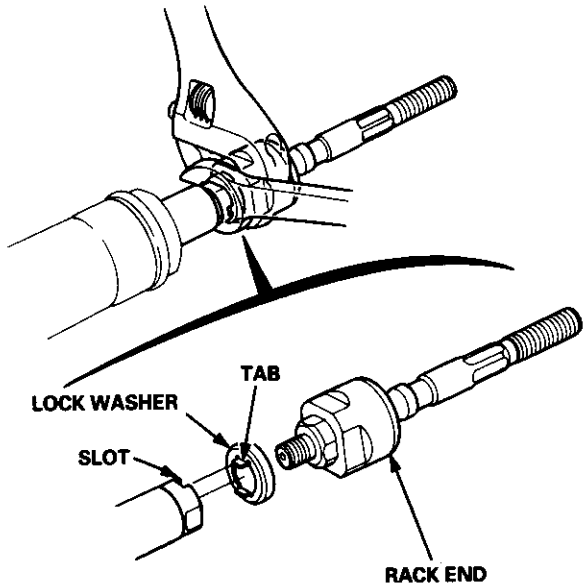

61. After tightening the rack end, stake the four sections of lock washer with a commercially available roll pin drift and a mallet.

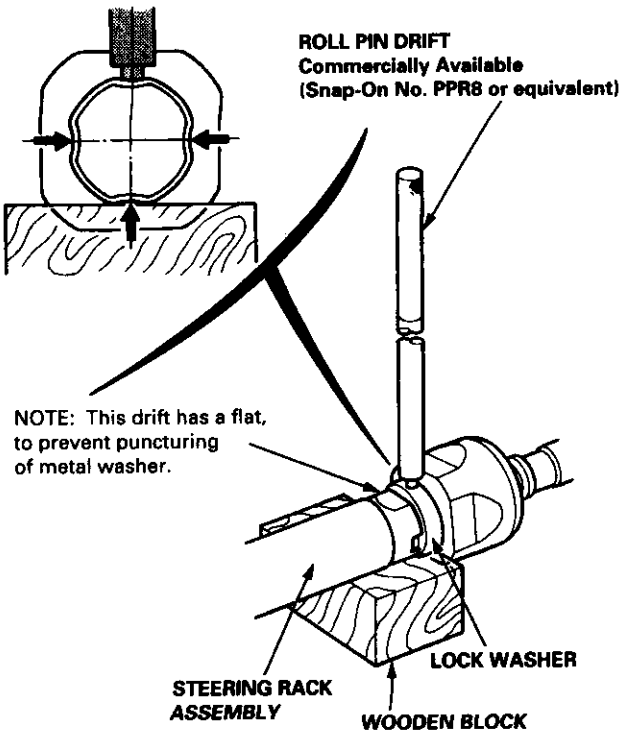

62. Apply steering grease to the circumference of the rack end housing.

63. Coat the rack end groove and inside of the boot with silicone grease.

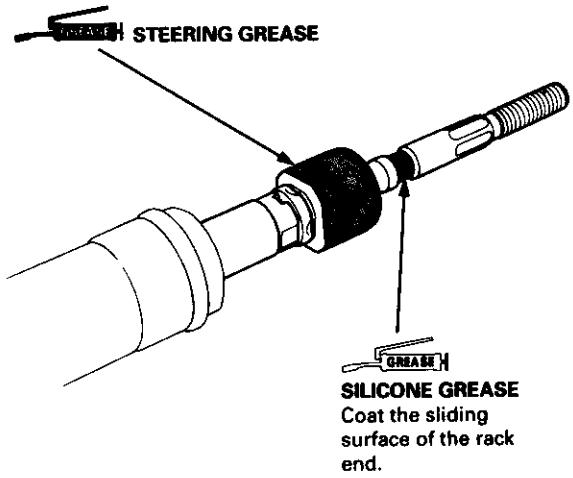

64. Install the boots in the rack end with the tube clamps.

NOTE: Install the boots with the rack in the straight ahead position (i.e. right and left tie-rods are equal in length).

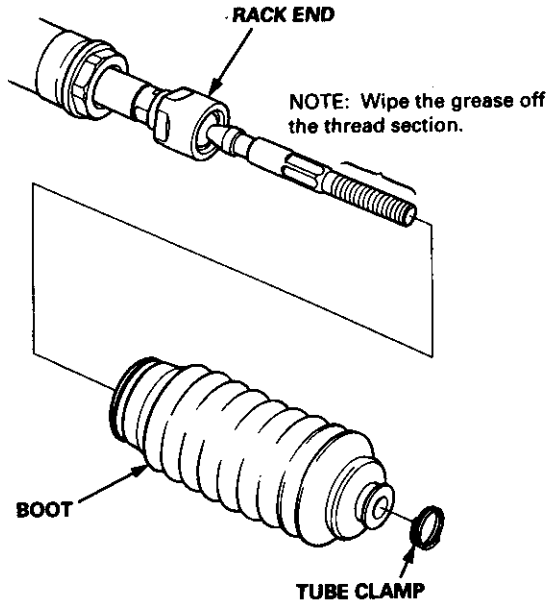

(cont'd)

Reassembly (cont'd)

65. Adjust the air hose fitting position of the boots by turning it as shown below.

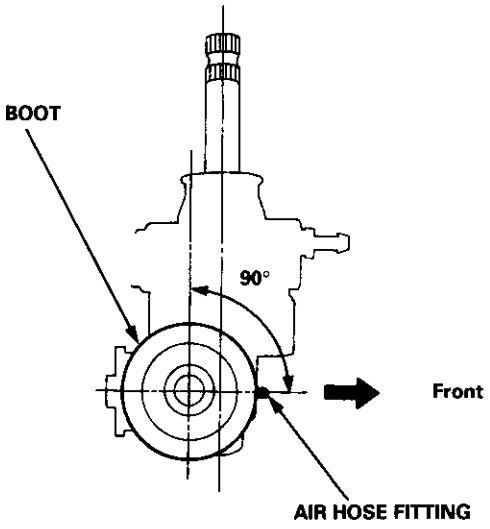

66. Connect the air hose between the right and left boot, then install the clips on the cylinder pipe B as shown.

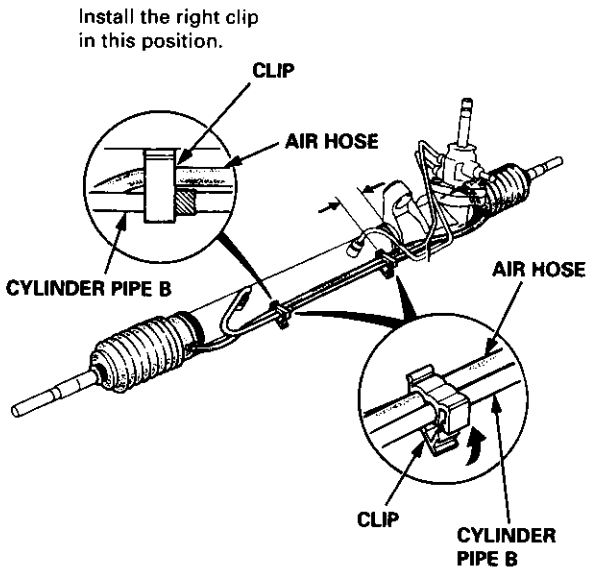

67. Install new boot bands on the boot and bend both sets of locking tabs.

68. Lightly tap on the doubled-over portions to reduce their height.

CAUTION: Stake the band locking tabs firmly.

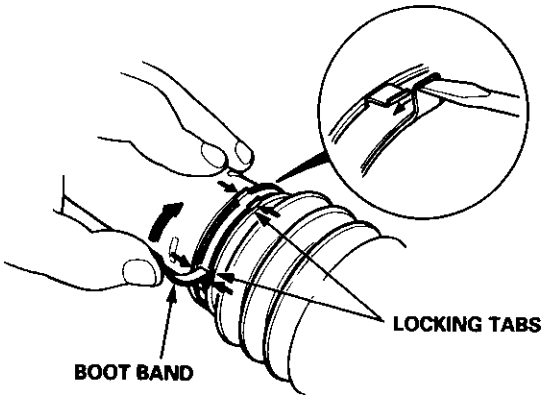

69. Slide the rack right and left to be certain that the boots are not deformed or twisted.

70. Install the right and left tie-rod ends on the rack ends.

Installation

CAUTION: Be careful not to bend or damage the piping when installing the gearbox.

1. Before installing the gearbox, slide the rack all the way to right.

2. Pass the right side of the steering gearbox above and through the right side of the rear beam.

3. Hold the steering gearbox and slide the rack all the way to the left.

4. Raise the left side of the steering gearbox above and through the left side of the rear beam.

5. Install the pinion shaft grommet and insert the pinion shaft up through the bulkhead.

   NOTE: Align the tab on the pinion shaft grommet with the slot in the valve body.

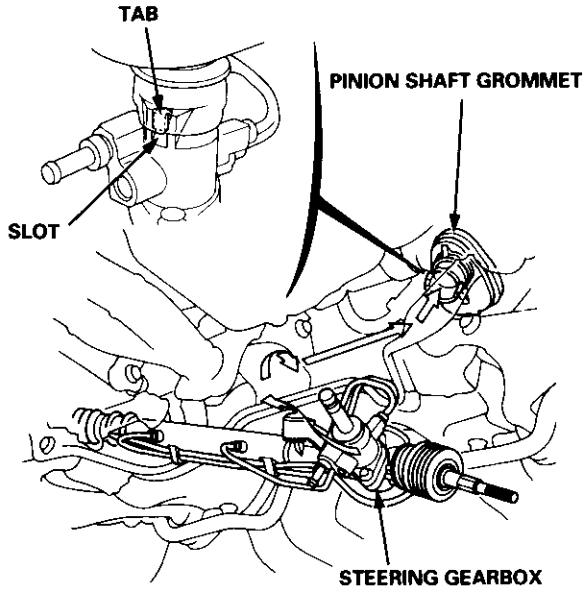

6. Install and tighten the gearbox mounting bolts.

   NOTE: After installing the gearbox, check the air hose connections for interference with adjacent parts.

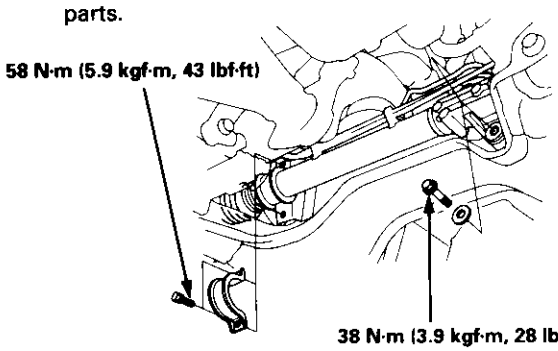

7. Center the steering rack within its stroke.

8. Make sure that the cable reel of the SRS is centered as follows:

   - Turn the steering wheel left approx. 150 degrees, to check the cable reel position with indicator.
   - If the cable reel is centered, the yellow gear tooth lines up with the alignment mark on the cover.
   - Return the steering wheel right approx. 150 degrees to position the steering wheel in the straight ahead position.

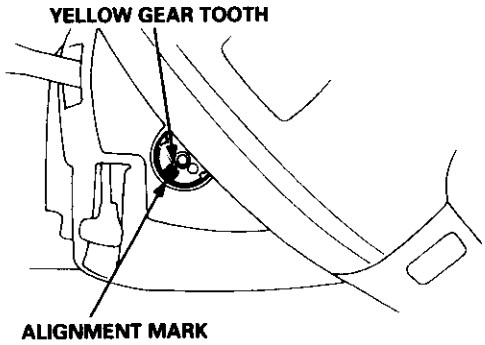

9. Slip the lower end of the steering joint onto the pinion shaft (line up the bolt hole with the groove around the shaft), and tighten the lower bolt.

   NOTE:
   - Connect the steering shaft and pinion with the cable reel and steering rack centered.
   - Be sure that the lower steering joint bolt is securely in the groove in the steering gearbox pinion.
   - If the steering wheel and rack are not centered, reposition the serrations at lower end of the steering joint.

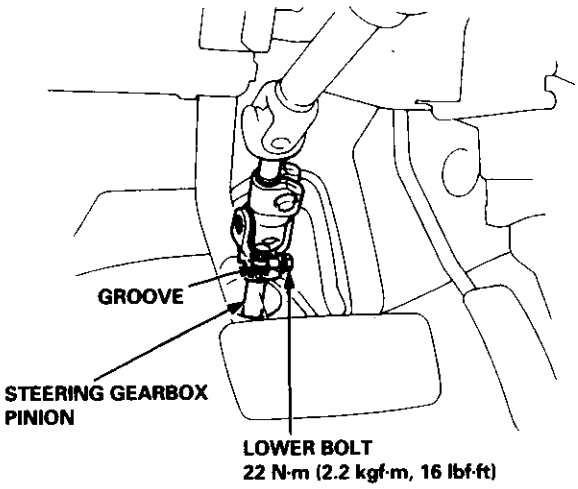

(cont'd)

Installation (cont'd)

10. Install the steering joint cover with the clamps and clips.

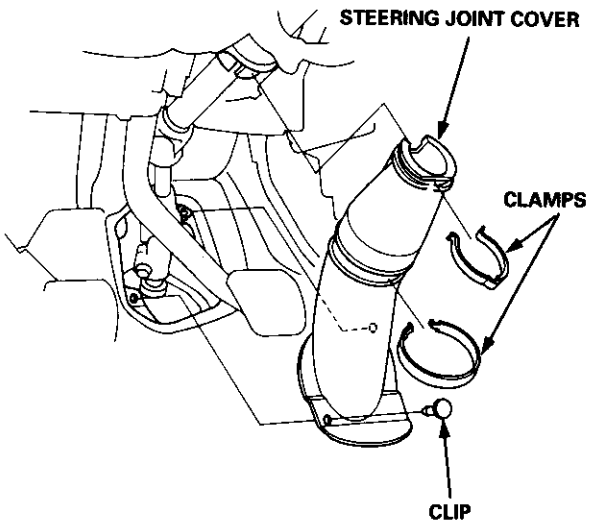

11. Connect the fluid lines to the valve body unit.

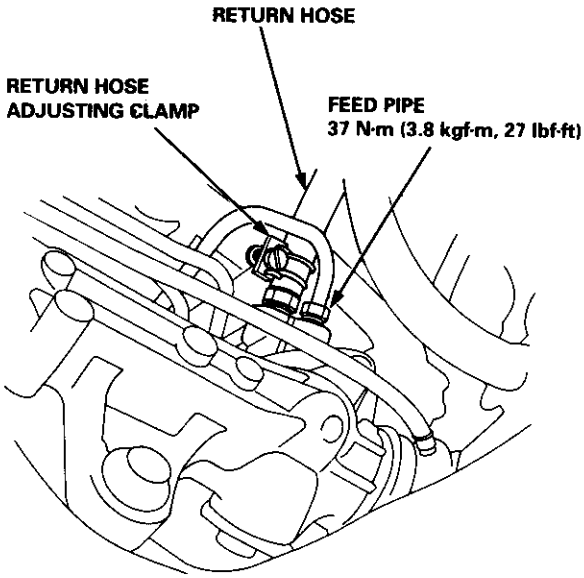

12. Install the rear beam brace rod and return pipe clamp on the rear beam.

NOTE: Install the rear beam brace toward the return pipe clamp.

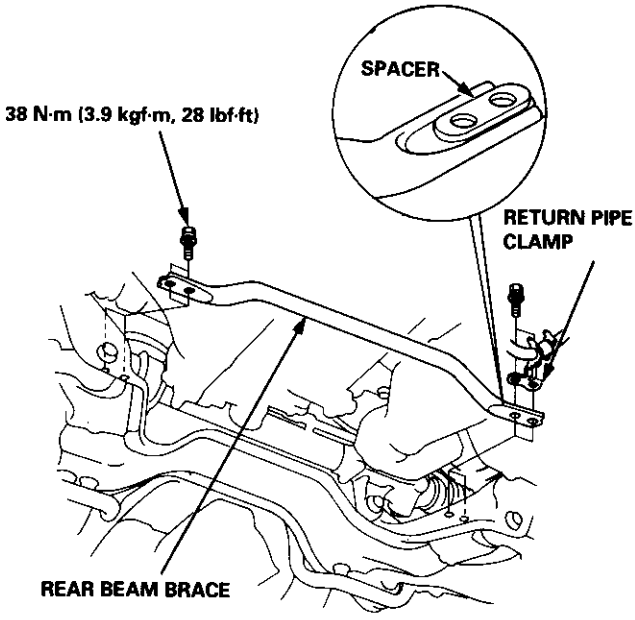

13. Install the three way catalytic converter with the new gaskets and new self-locking nuts, and connect the heated oxygen sensor (HO2S) connector.

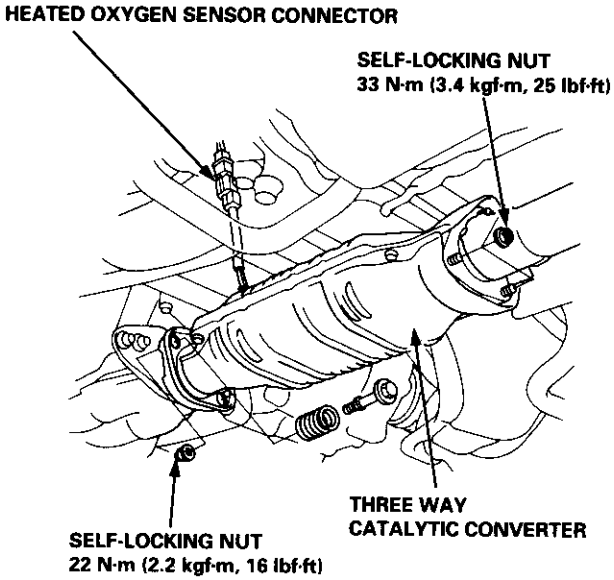

14. Connect the shift linkage (M/T model: see section 13, A/T model: see section 14).

15. Thread the right and left tie-rod ends onto the rack an equal number of turns.

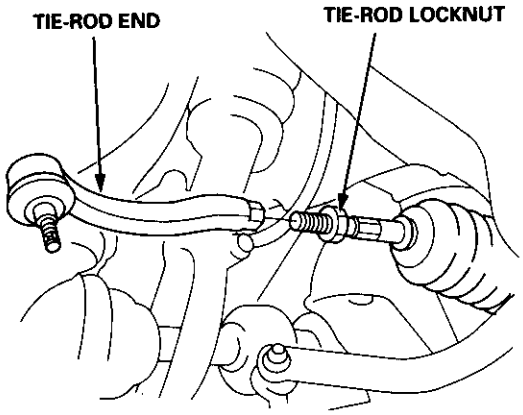

16. Reconnect the tie-rod ends to the steering knuckles, tighten the castle nut to the specified torque, and install new cotter pins.

CAUTION: Torque the castle nut to the lower torque specification, then tighten it only far enough to align the slot with the pin hole. Do not align the nut by loosening.

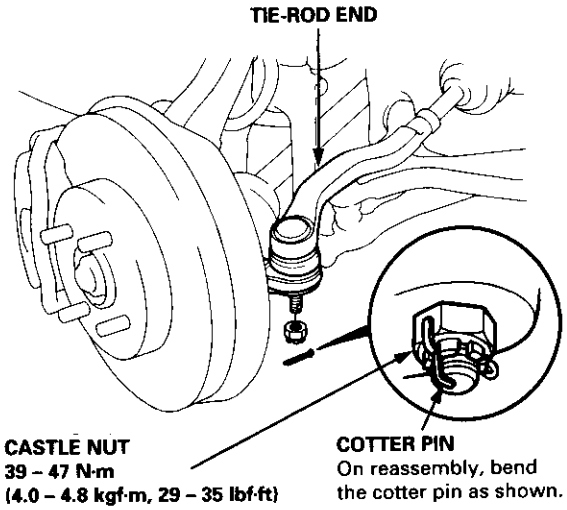

17. Install the front wheels.

18. Fill the system with power steering fluid and bleed air from the system (see page 17-21).

19. After installation, perform the following checks.

- Check the gearbox for leaks (see page 17-23).
- Adjust the front toe (see section 18).
- Check the steering wheel spoke angle. Adjust by turning the right and left tie-rods, if necessary.

NOTE: Turn the right and left tie-rods equally.

Ball Joint Boot Replacement

1. Remove the boot set ring and the boot.

CAUTION: Do not contaminate the boot installation section with grease.

2. Pack the interior of the boot and lip with grease.

3. Wipe the grease off the sliding surface of the ball pin, then pack the lower area with fresh grease.

CAUTION:
- **Keep grease off the boot installation section and the tapered section of the ball pin.**
- **Do not allow dust, dirt, or other foreign materials to enter the boot.**

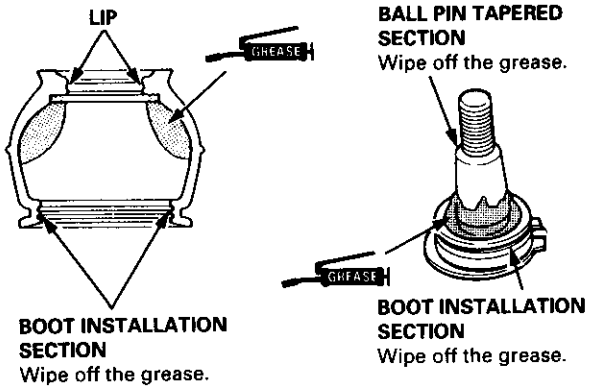

4. Install the boot in the groove of the boot installation section securely, then bleed air.

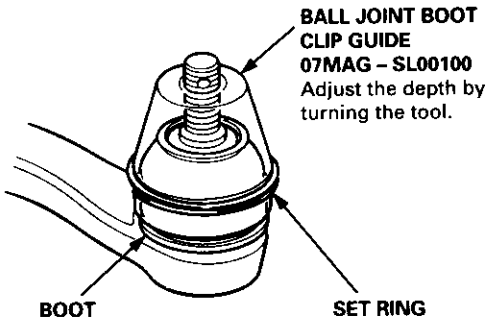

5. Insert the special tool into the threads in the ball pin and align the end of the tool with the groove in the boot.
Slide the clip over the tool and into position.

CAUTION: After installing the boot, check the ball pin tapered section for grease contamination and wipe it if necessary.

Suspension

Special Tools 18-2
Component Location
  Index 18-3
Wheel Alignment
  Caster 18-4
  Camber 18-4
  Front Toe Inspection/
  Adjustment 18-5
  Rear Toe Inspection/
  Adjustment 18-5
  Turning Angle Inspection 18-6
Wheel/Hub Inspection
  Bearing End Play 18-7
  Wheel Runout 18-7
Front Suspension
  Torque Specifications 18-8
  Knuckle/Hub
    Illustrated Index 18-9
    Knuckle Removal 18-10
    Wheel Bearing Replacement 18-13
    Knuckle Installation 18-15
  Lower Ball Joint Replacement 18-17
  Ball Joint Boot Replacement 18-18
  Suspension Arms
    Removal/Inspection 18-19
    Installation 18-20
  Lower Arm Bushing
  Replacement 18-21
Front Damper
  Removal 18-22
  Disassembly/Inspection 18-22
  Reassembly 18-24
  Installation 18-25
Rear Suspension
  Torque Specifications 18-26
  Hub Bearing Unit
    Illustrated Index 18-27
    Removal 18-28
    Installation 18-29
  Suspension Arms
    Removal/Inspection 18-31
    Installation 18-32
  Lower Arm Bushing
  Replacement 18-33
Rear Damper
  Removal 18-34
  Disassembly/Inspection 18-35
  Reassembly 18-37
  Installation 18-38

Special Tools

Ref. No.	Tool Number	Description	Qty	Page Reference
①	07GAF – SD40700	Hub Dis/Assembly Base	2	18-13
②	07GAF – SE00100	Hub Dis/Assembly Tool	1	18-13, 14
③	07GAG – SD40700	Ball Joint Boot Clip Guide	1	18-18
④	07HAD – SF10100	Driver Attachment	1	18-14
⑤	07JAF – SH20200	Ball Joint Remover Base	1	18-17
⑥	07MAC – SL00200	Ball Joint Remover, 28 mm	1	18-11, 12
⑦	07NAD – SS00101 or 07NAD – SS00100	Bushing Driver	1	18-21, 33
⑧	07746 – 0010500	Attachment, 62 x 68 mm	1	18-13, 15
⑨	07749 – 0010000	Driver	1	18-13, 14, 15
⑩	07965 – SB00100	Ball Joint Remover/Installer	1	18-17
⑪	07965 – SB00200	Ball Joint Installer Base	1	18-17
⑫	07965 – SD90100	Support Base	1	18-14, 15
⑬	07974 – SA50700	Ball Joint Boot Clip Guide	1	18-17, 18

①

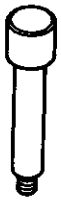
②

③ ⑬

④

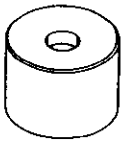
⑤

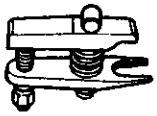
⑥

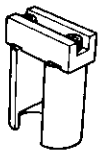
⑦

⑧

⑨

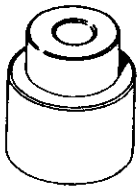
⑩

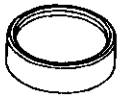
⑪

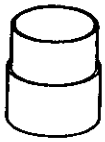
⑫

Component Location

Index

Wheel Alignment, page 18-4

〈Front Suspension:〉

FRONT DAMPER
- Removal, page 18-22
- Disassembly, page 18-22
- Inspection, page 18-22
- Reassembly, page 18-24
- Installation, page 18-25

UPPER ARM
- Removal/Inspection, page 18-19
- Installation, page 18-20

KNUCKLE/HUB
- Knuckle Removal, page 18-10
- Wheel Bearing Replacement, page 18-13
- Knuckle Installation, page 18-15
- Lower Ball Joint Replacement, page 18-17

LOWER ARM
- Removal/Inspection, page 18-19
- Installation, page 18-20

STABILIZER BAR
- Removal/Inspection, page 18-19
- Installation, page 18-20

〈Rear Suspension:〉

REAR DAMPER
- Removal, page 18-34
- Disassembly, page 18-35
- Inspection, page 18-35
- *Reassembly, page 18-37*
- Installation, page 18-38

STABILIZER BAR
- Removal/Inspection, page 18-31
- Installation, page 18-32

UPPER ARM
- Removal/Inspection, page 18-31
- Installation, page 18-32

LOWER ARM
- Removal/Inspection, page 18-31
- Installation, page 18-32

COMPENSATOR ARM
- Removal/Inspection, page 18-31
- Installation, page 18-32

TRAILING ARM
- Removal, page 18-31
- Installation, page 18-32

Wheel Alignment

Caster

NOTE: For proper inspection/adjustment of the wheel alignment check and adjust the following before checking the alignment.

- Check that the suspension is not modified.
- Check the tire size and tire pressure.
- Check the runout of the wheels and tires.
- Check the suspension ball joints. (Hold a wheel with your hands and move it up and down and right and left to check for wobbling.)

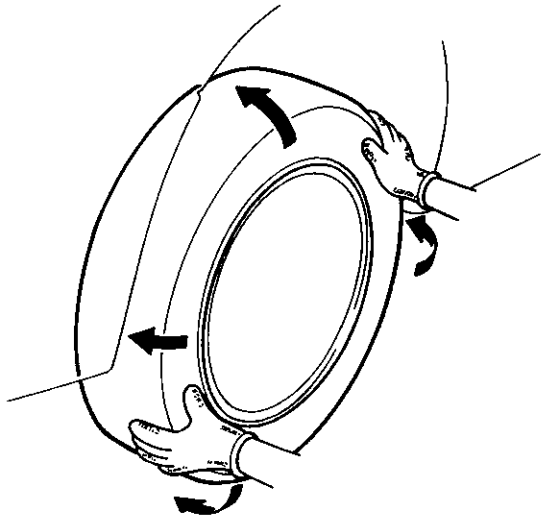

Inspection

NOTE: Use commercially available computerized four wheel alignment equipment to measure wheel alignment (i.e., caster, camber, toe, and/or turning angle). Follow the equipment manufacturer's instructions.

1. Check the caster angle.

   Caster angle: 1°10′ ± 1°

2. If out of specification, check for bent or damaged suspension components.

Camber

Inspection

NOTE: Use commercially available computerized four wheel alignment equipment to measure wheel alignment (i.e., caster, camber, toe, and/or turning angle). Follow the equipment manufacturer's instructions.

1. Check the camber angle.

   Camber angle:
   Front: −0°10′ ± 1°
   Rear: −0°45′ $^{+0°45'}_{-1°15'}$

2. If out of specification, check for bent or damaged suspension components.

Front Toe Inspection/Adjustment

NOTE: Use commercially available computerized four wheel alignment equipment to measure wheel alignment (i.e., caster, camber, toe, and/or turning angle). Follow the equipment manufacturer's instructions.

1. Check the tire pressure.
2. Center steering wheel spokes.
3. Check the toe with the wheels pointed straight ahead.

   Front toe: 0 ± 2 mm (0 ± 0.08 in)

   — If adjustment is required, go on to step 4.

   — If no adjustment is required, remove alignment equipment.
4. Loosen the tie-rod locknuts and turn both tie-rods in the same direction until the front wheels are in straight ahead position.
5. Turn both tie-rods equally until the toe reading on the turning radius gauge is correct.
6. After adjusting, tighten the tie-rod locknuts.

   NOTE: Reposition the tie-rod boot if it is twisted or displaced.

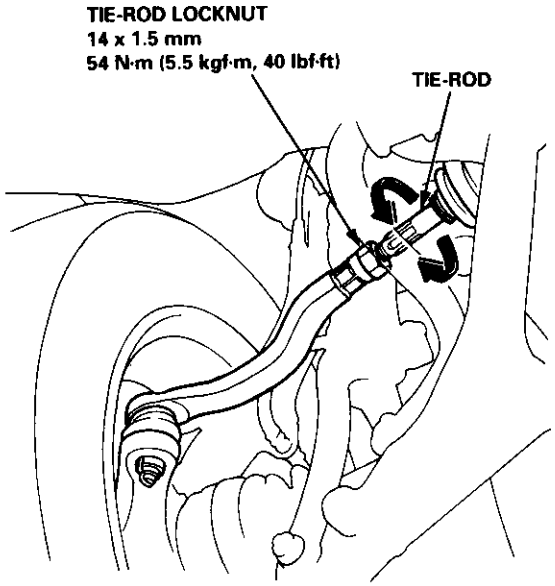

Rear Toe Inspection/Adjustment

NOTE: Use commercially available computerized four wheel alignment equipment to measure wheel alignment (i.e., caster, camber, toe, and/or turning angle). Follow the equipment manufacturer's instructions.

1. Release parking brake.

   NOTE:
   - Measure difference in toe measurements with the wheels pointed straight ahead.
   - If the parking brake is engaged, you may get an incorrect reading.

   Rear toe-in: 3^{+2}_{-1} mm ($0.12^{+0.08}_{-0.04}$ in)

   — If adjustment is required, go to step 2.

   — If no adjustment is required, remove alignment equipment.
2. Before adjustment, note the locations of self-locking bolts on the right and left compensator arms.
3. Loosen the self-locking bolts and slide the compensator arm in or out as shown, to adjust the toe.
4. Tighten the self-locking bolts.

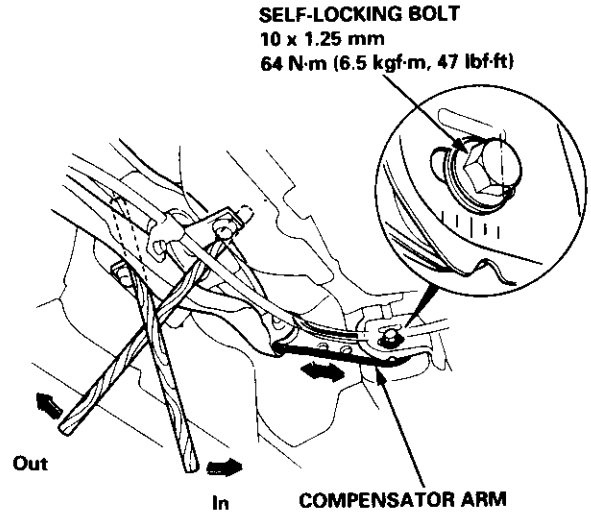

- Example:
  After the rear toe inspection, the wheel is 2 mm (0.08 in) out of the specification.

— Move the arm so the adjusting bolt moves 2 mm (0.08 in) inward from the position recorded before the adjustment.

— The distance the adjusting bolt is moved should be equal to the amount out-of-specification.

Turning Angle Inspection

NOTE: Use commercially available computerized four wheel alignment equipment to measure wheel alignment (i.e., caster, camber, toe, and/or turning angle). Follow the equipment manufacturer's instructions.

1. Turn the wheel right and left while applying the brake, and measure the turning angle of both wheels.

   Turning angle:
   Inward wheel: 36°00'
   Outward wheel: 30°30'(reference)

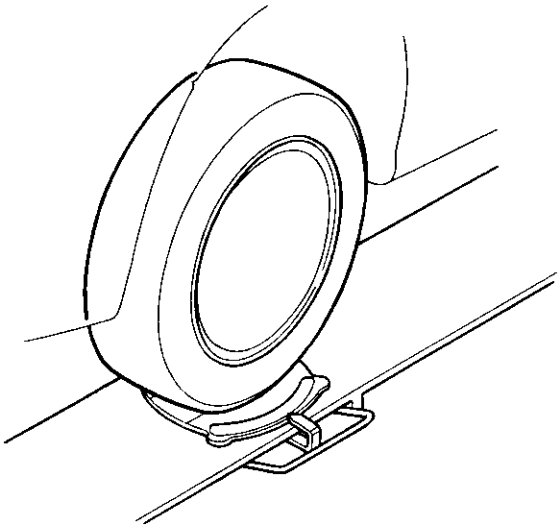

2. If the turning angle is not within the specifications, check for bent or damaged suspension components.

Wheel/Hub Inspection

Bearing End Play

1. Raise the car off the ground, and support it with safety stands in the proper locations (see section 1).
2. Remove the wheels, then reinstall the wheel nuts.
3. Attach the dial gauge as shown.
4. Measure the bearing end play by moving the disc in or outward.

   Front/Rear:
   Standard: 0 – 0.05 mm (0 – 0.002 in)

〈Front:〉

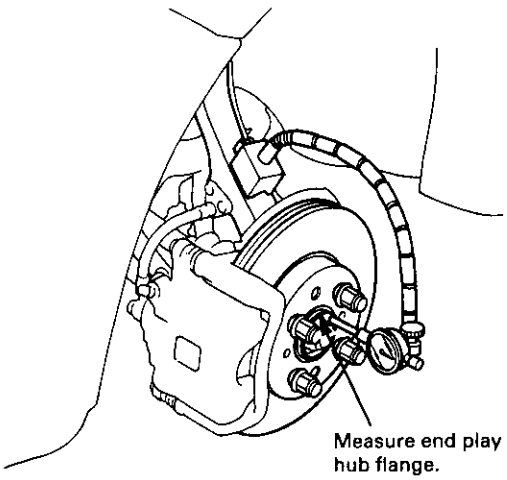

〈Rear:〉

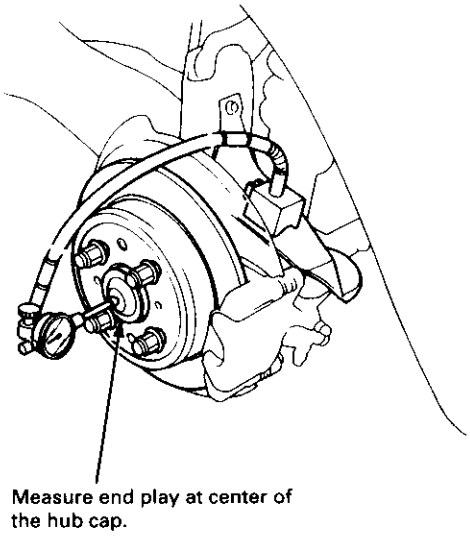

5. If the bearing end play measurement is more than the standard, replace the wheel bearing.

Wheel Runout

1. Raise the car off the ground, and support it with safety stands in the proper locations (see section 1).
2. Check for bent or deformed wheels.
3. Attach the dial gauge as shown.
4. Measure the wheel runout by turning the wheel.

   Front and Rear Wheel Axial Runout:
   Standard:
   Steel Wheel: 0 – 1.0 mm (0 – 0.04 in)
   Aluminum Wheel: 0 – 0.7 mm (0 – 0.03 in)
   Service Limit: 2.0 mm (0.08 in)

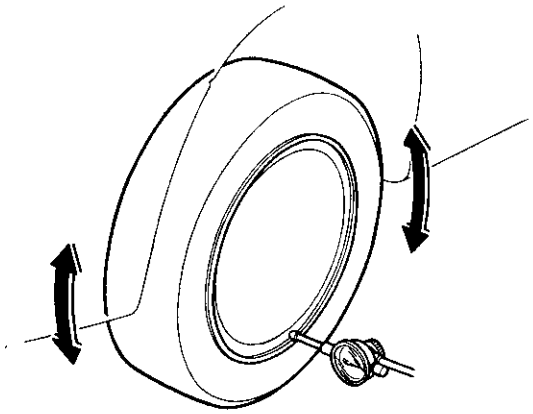

Front and Rear Wheel Radial Runout:
Standard:
Steel Wheel: 0 – 1.0 mm (0 – 0.04 in)
Aluminum Wheel: 0 – 0.7 mm (0 – 0.03 in)
Service Limit: 1.5 mm (0.06 in)

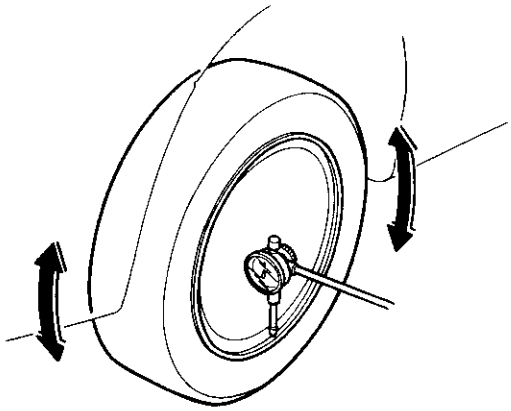

5. If the wheel runout is more than the service limit, replace the wheel.

Torque Specifications

CAUTION:

- **Replace the self-locking nuts after removal.**
- **Replace the self-locking bolts if you can easily thread a non-self-locking nut past their nylon locking inserts. (It should require 1 N·m (0.1 kgf·m, 0.7 lbf·ft) of torque to turn the nut on the bolt).**
- **The vehicle should be on the ground before any bolts or nuts connected to rubber mounts or bushings are tightened.**
- **Torque the castle nut to the lower torque specification, then tighten it only far enough to align the slot with the pin hole. Do not align the nut by loosening.**

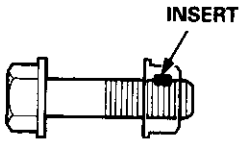

NOTE: Wipe off the grease before tightening the nut at the ball joint.

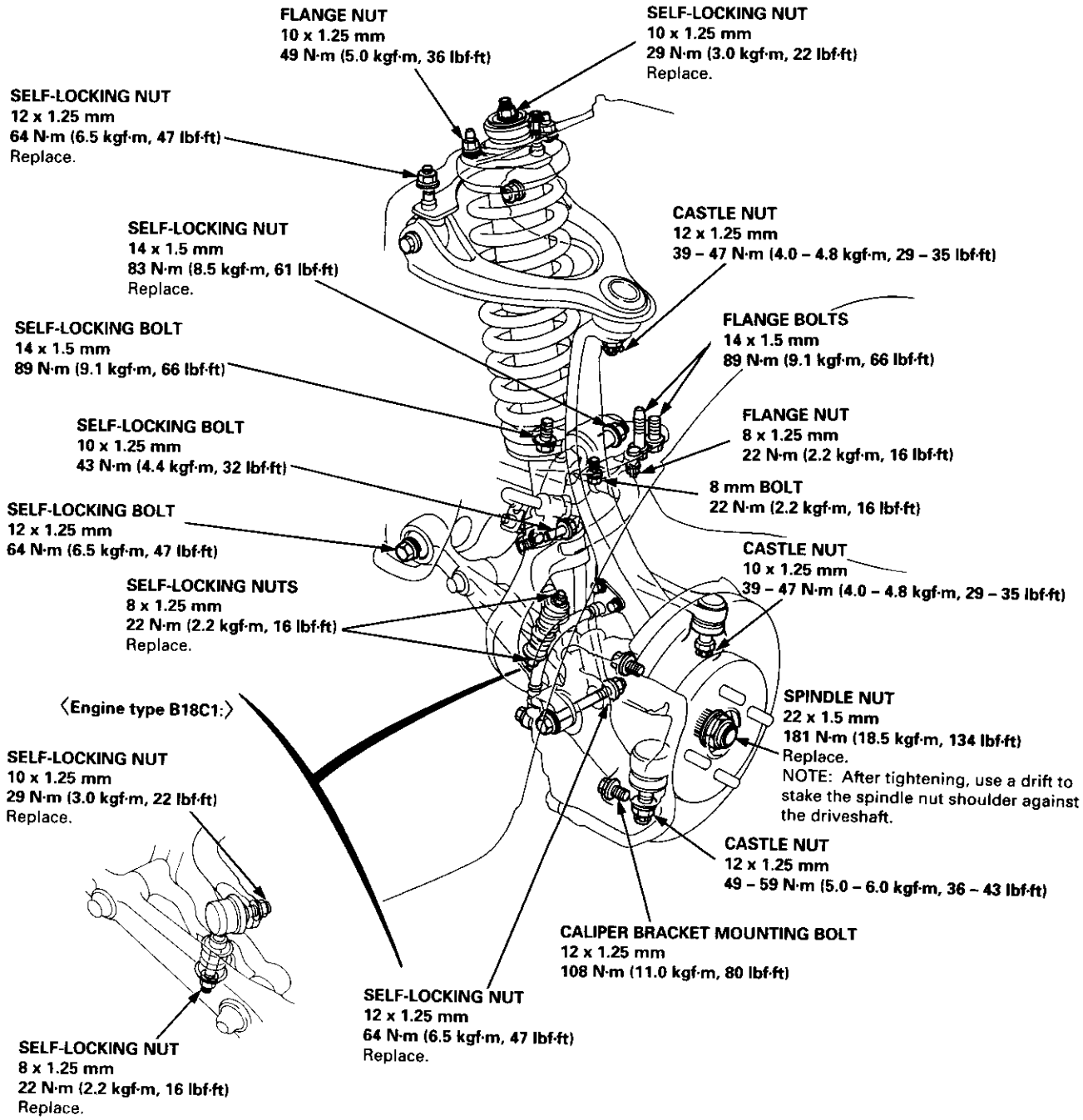

Illustrated Index

NOTE:
- Use only genuine Honda wheel weights for aluminum wheels. Non-genuine wheel weights may corrode and damage the aluminum wheels.
- On the aluminum wheels, remove the center cap from the inside of the wheel after removing the wheel.
- Before installing the brake disc, clean the mating surfaces of the front hub and the brake disc.
- Before installing the wheel, clean the mating surfaces of the brake disc and the wheel.

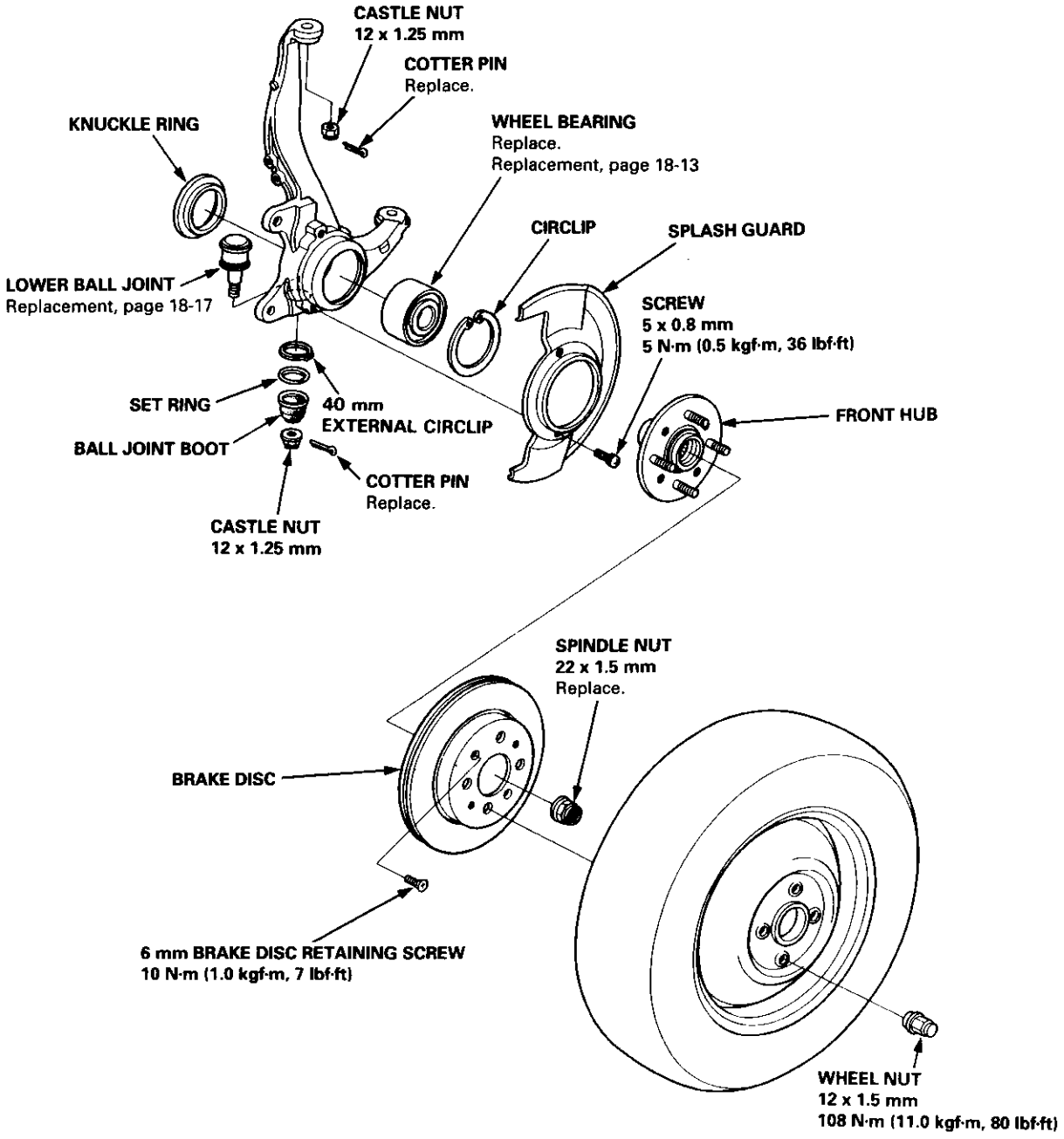

Knuckle/Hub

Knuckle Removal

1. Loosen the wheel nuts slightly.
2. Raise the front of car, and support it with safety stands in the proper locations (see section 1).
3. Remove the wheel nuts and front wheel.
4. Raise the locking tab on the spindle nut, then remove the nut.

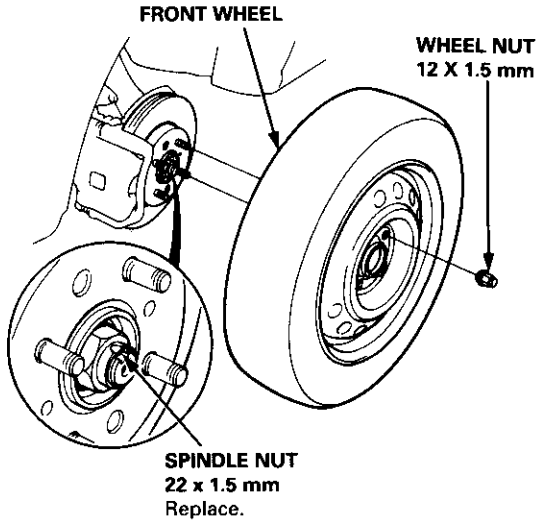

5. Remove the brake hose mounting bolts.
6. Remove the caliper bracket mounting bolts, and hang the caliper to one side.

   CAUTION: To prevent accidental damage to the caliper or brake hose, use a short piece of wire to hang the caliper from the undercarriage.

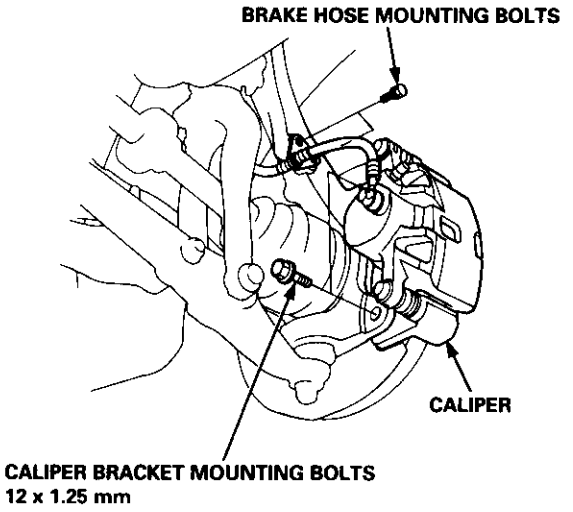

7. Remove the 6 mm brake disc retaining screws.
8. Screw the two 8 x 1.25 mm bolts into the disc to push it away from the hub.

   NOTE: Turn each bolt two turns at a time to prevent cocking the disc excessively.

9. Remove the brake disc from the knuckle.
10. Check the front hub for damage or cracks.

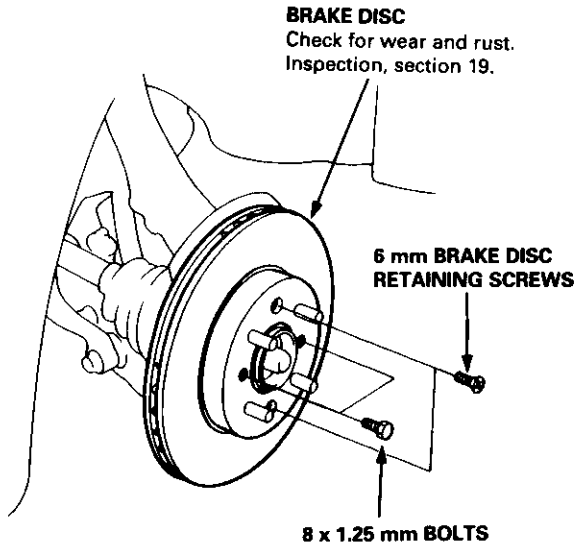

11. Remove the wheel sensor wire bracket, then remove the wheel sensor from the knuckle (for cars with ABS).

    NOTE: Do not disconnect the wheel sensor connector.

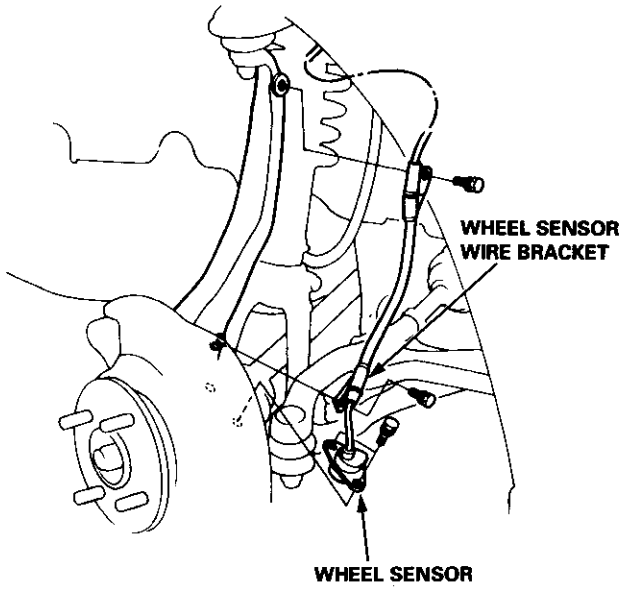

NOTE: Use ball joint remover, 28 mm, to separate the ball joints from the suspension or tie-rod end.

CAUTION: Be careful not to damage the ball joint boot.

12. Clean any dirt or grease off the ball joint.

13. Remove the cotter pin from the tie-rod end ball joint castle nut, and remove the nut.

14. Apply grease to the special tool on the areas shown. This will ease installation of the tool and prevent damage to the pressure bolt threads.

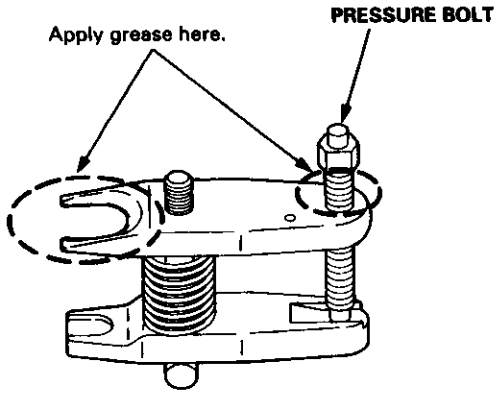

15. Install a 10 mm hex nut on the ball joint. Be sure that the hex nut is flush with the ball joint pin end to prevent damage to the threaded end of the ball joint.

16. Use the ball joint remover, 28 mm, as shown. Insert the jaws carefully, making sure you do not damage the ball joint boot.

17. Adjust the jaw spacing by turning the pressure bolt.

    NOTE: If necessary, apply penetrating type lubricant to loosen the ball joint.

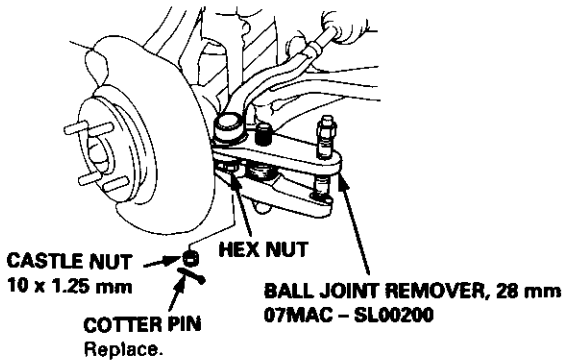

18. Once the tool is in place, turn the adjusting bolt as necessary to make the jaws parallel. Then hand-tighten the pressure bolt and recheck the jaws to make sure they are still parallel.

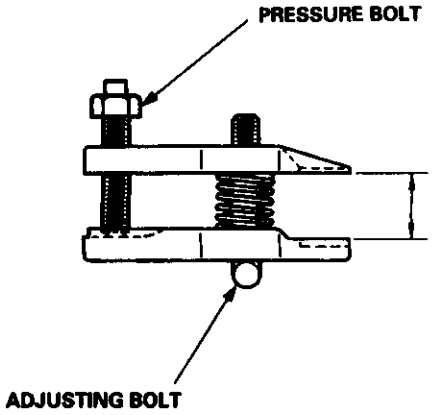

19. With a wrench, tighten the pressure bolt until the ball joint shaft pops loose from the steering arm.

    WARNING Wear eye protection. The ball joint can break loose suddenly and scatter dirt or other debris in your eyes.

20. Remove the tool, then remove the nut from the end of the ball joint and pull the ball joint out of the steering/suspension arm. Inspect the ball joint boot and replace it if damaged.

(cont'd)

Knuckle/Hub (cont'd)

21. Remove the cotter pin from the lower arm ball joint castle nut, and remove the nut.

22. Install a 12 mm hex nut on the ball joint. Be sure that the hex nut is flush with the ball joint pin end, or the threaded section of the ball joint pin might be damaged by the ball joint remover.

23. Use the ball joint remover, 28 mm as shown on page 18-11 to separate the ball joint and lower arm.

    NOTE: If necessary, apply penetrating type lubricant to loosen the ball joint.

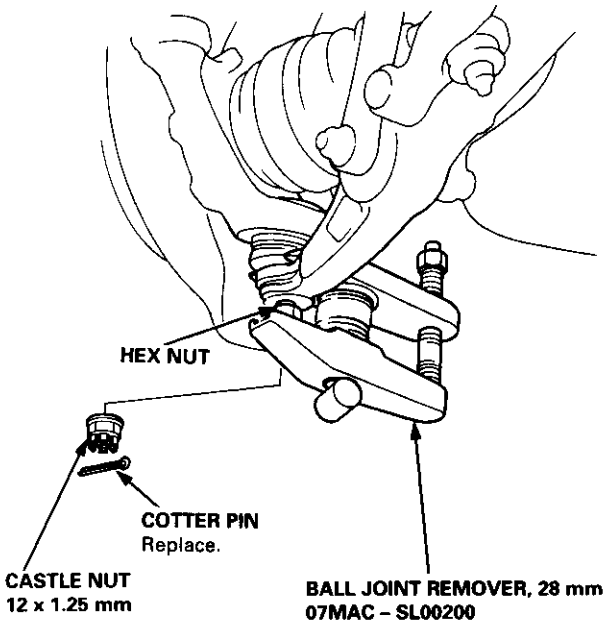

24. Remove the cotter pin from the upper ball joint castle nut, and remove the nut.

25. Install the 12 mm hex nut on the ball joint.
    Be sure that the hex nut is flush with the ball joint pin end, or the threaded section of the ball joint pin might be damaged by the ball joint remover.

26. Use the ball joint remover, 28 mm as shown on page 18-11 to separate the ball joint and knuckle.

    NOTE: If necessary, apply penetrating type lubricant to loosen the ball joint.

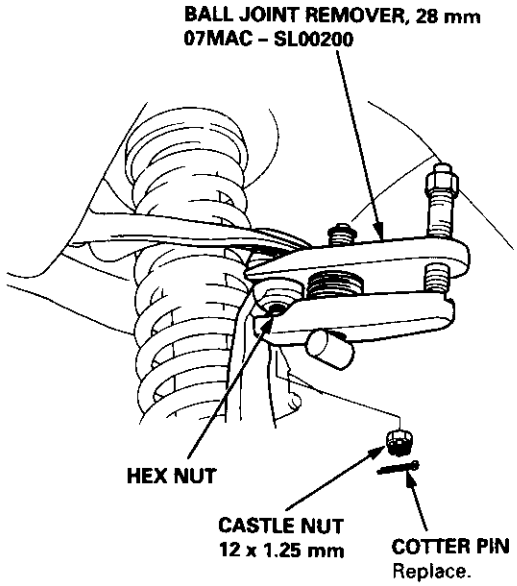

27. Pull the knuckle outward and remove the driveshaft outboard joint from the knuckle using a plastic hammer, then remove the knuckle.

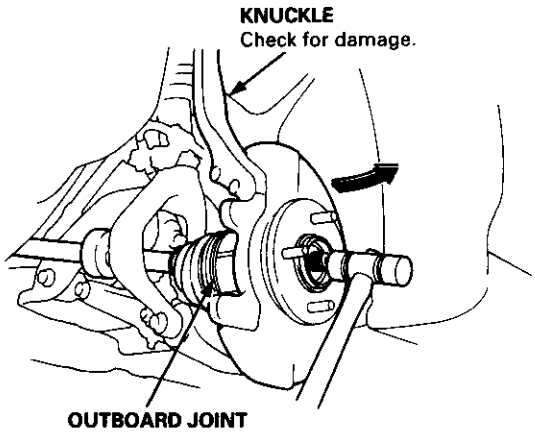

Wheel Bearing Replacement

NOTE: Replace the bearing with a new one after removal.

1. Separate the front hub from the knuckle using the special tools and a press as shown.

   CAUTION:
   - **Take care not to distort the splash guard.**
   - **Hold onto the hub to keep it from falling when pressed clear.**

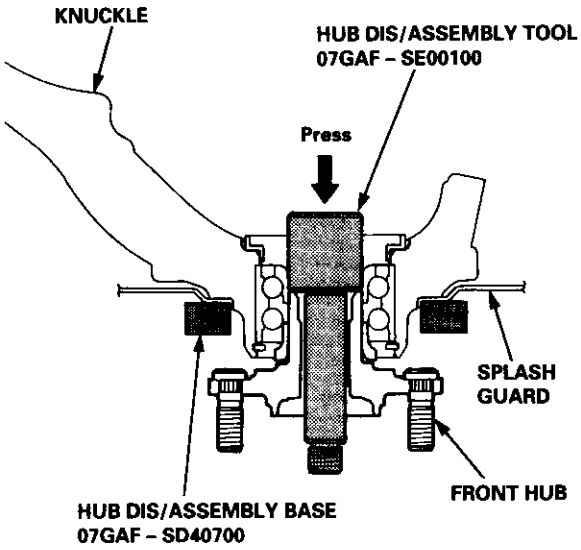

2. Remove the knuckle ring from the knuckle.

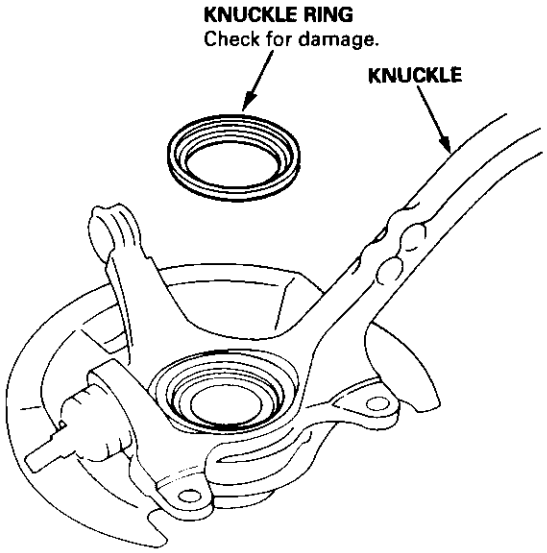

3. Remove the circlip and the splash guard from the knuckle.

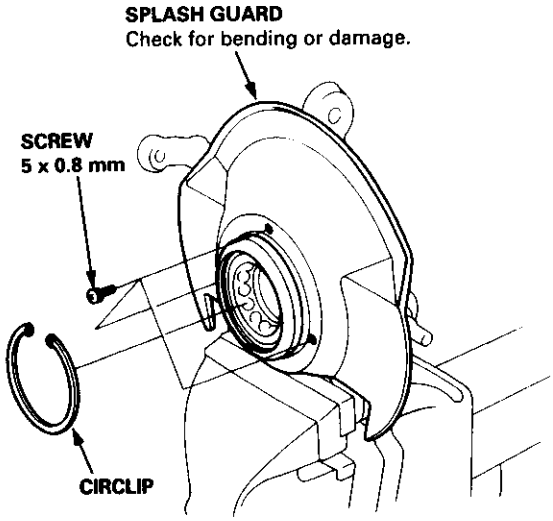

4. Press the wheel bearing out of the knuckle using the special tools and a press as shown.

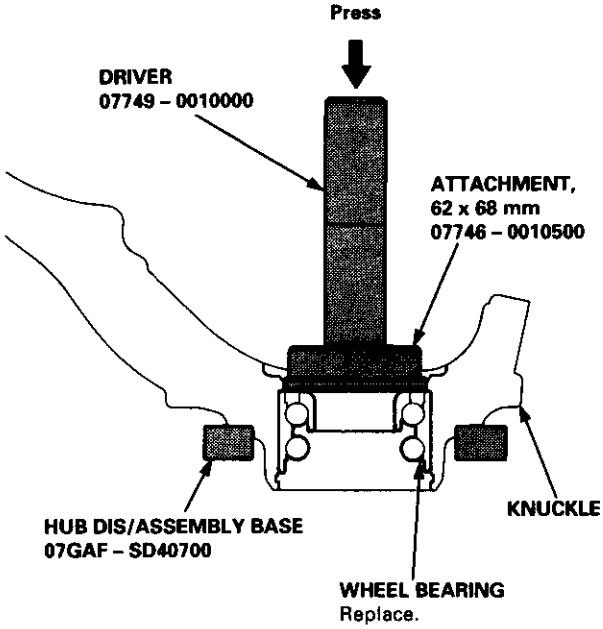

(cont'd)

Knuckle/Hub (cont'd)

5. Remove the wheel bearing inner race from the front hub using the special tool and a commercially available bearing separator as shown.

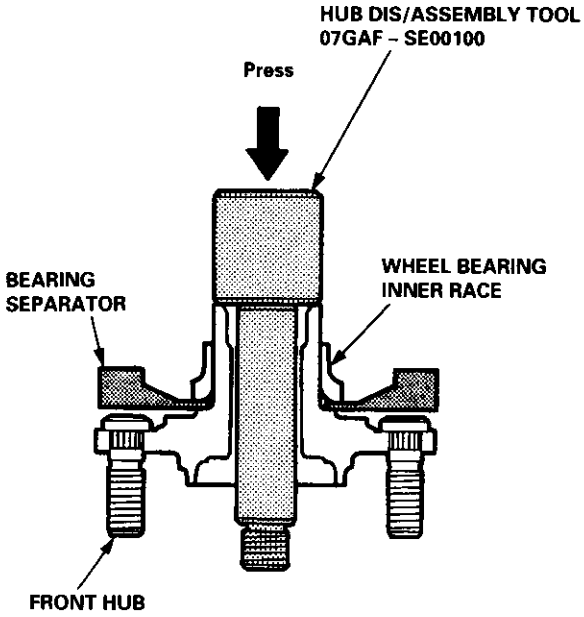

NOTE: Wash the knuckle and hub thoroughly in high flash point solvent before reassembly.

6. Press a new wheel bearing into the knuckle using the special tools and a press as shown.

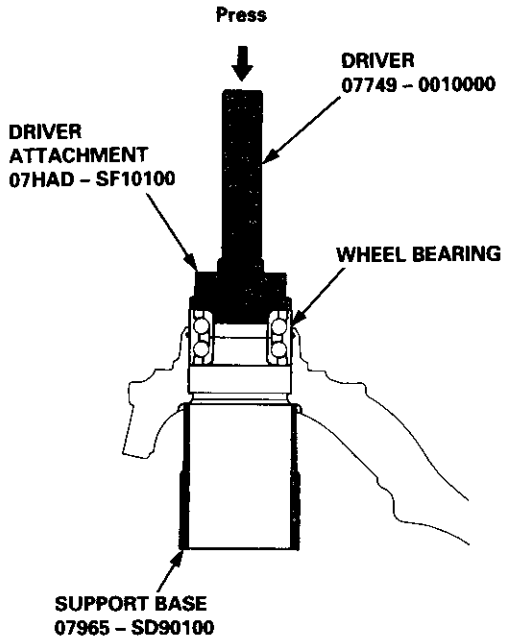

7. Install the circlip securely in the knuckle groove.

8. Install the splash guard and tighten the screws.

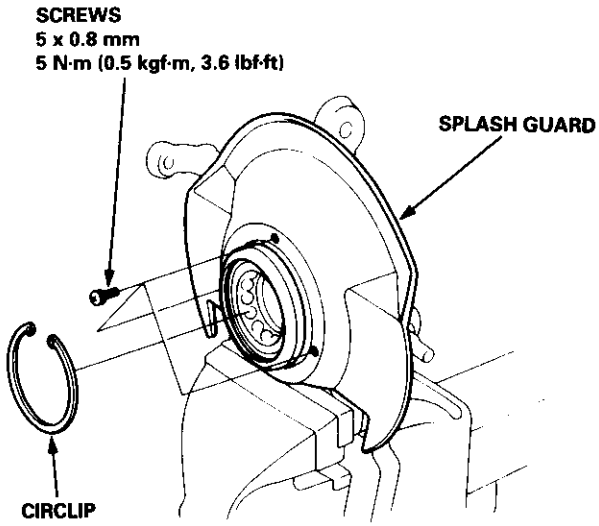

9. Install the front hub on the knuckle using the special tools and a press as shown.

CAUTION: Take care not to distort the splash guard.

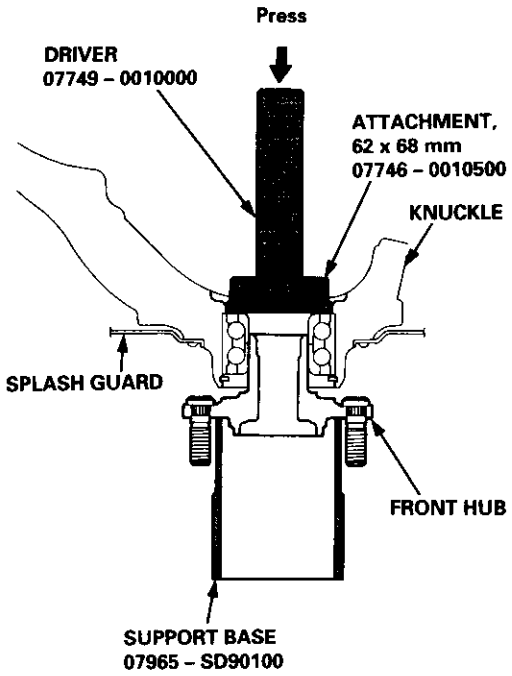

10. Install the knuckle ring on the knuckle.

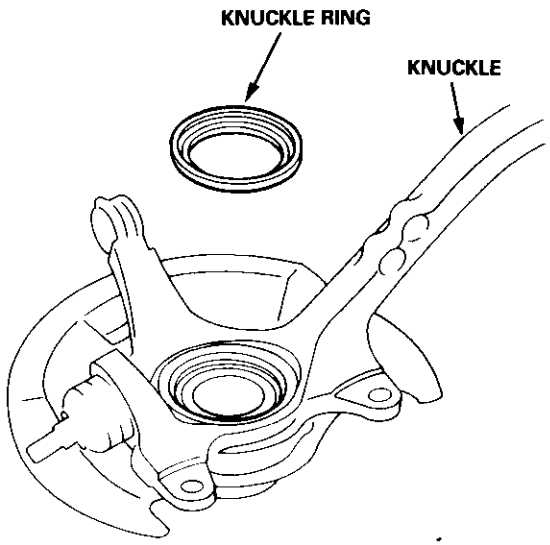

Knuckle Installation

1. Install the knuckle on the driveshaft.

2. Install the knuckle on the lower arm and the tie-rod, then tighten the castle nuts and install new cotter pins.

CAUTION:
- **Be careful not to damage the ball joint boot.**
- **Torque the castle nut to the lower torque specification, then tighten it only far enough to align the slot with the pin hole. Do not align the nut by loosening.**

NOTE: Wipe off the grease before tightening the nut at the ball joint.

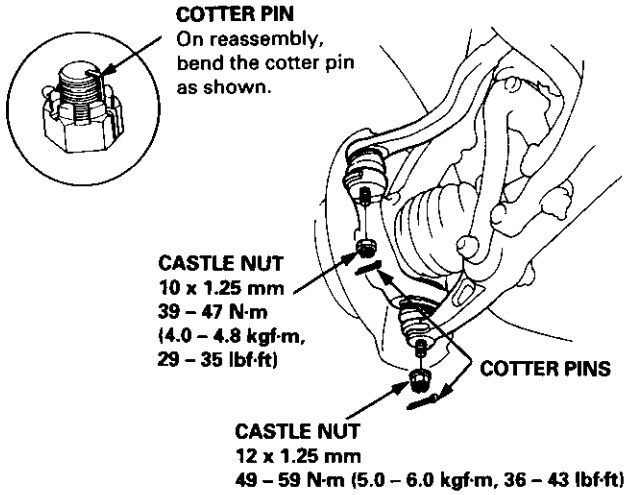

3. Install the knuckle on the upper arm, then tighten the castle nut and install a new cotter pin.

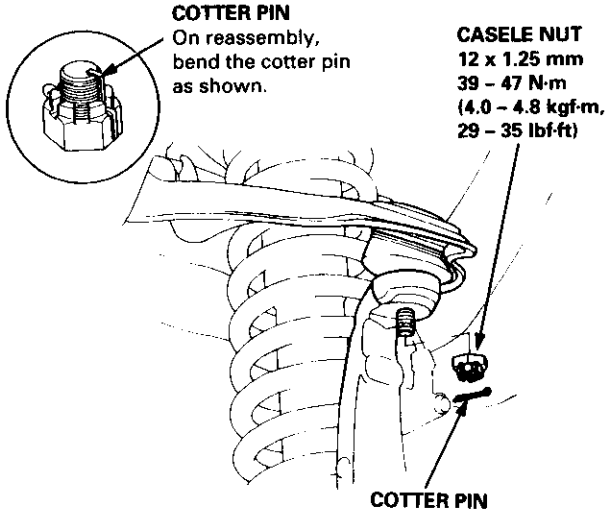

(cont'd)

Knuckle/Hub (cont'd)

4. Install the wheel sensor with the sensor mounting bolts (for cars with ABS).

5. Install the sensor wire with the two bolts (for cars with ABS).

   NOTE: Be careful when installing the sensors to avoid twisting wires.

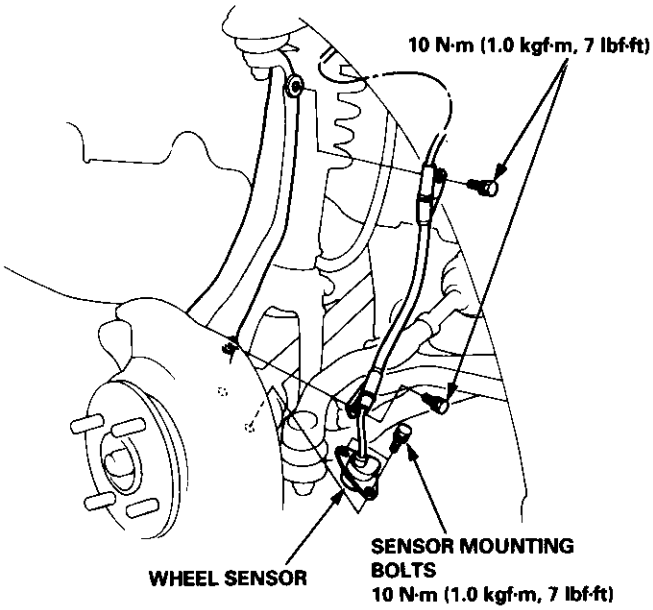

6. Install the brake disc with the 6 mm brake disc retaining screws.

   NOTE: Before installing the brake disc, clean the mating surfaces of the front hub and the brake disc.

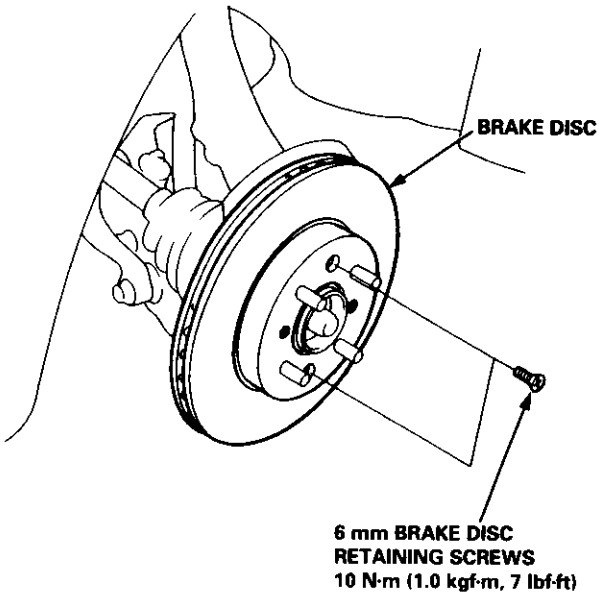

7. Install the brake caliper with the caliper bracket mounting bolts.

8. Install the brake hose with the brake hose mounting bolts.

   CAUTION: Be careful not to twist the hose more than necessary.

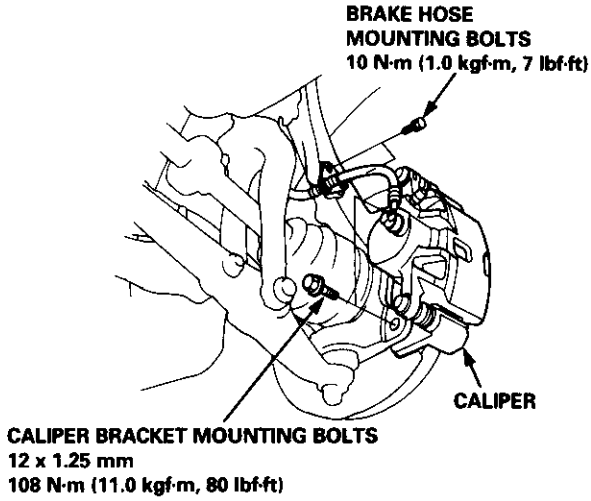

9. Install a new spindle nut, then tighten the nut.

10. Install the wheel with the wheel nuts.

    NOTE: Before installing the wheel, clean the mating surfaces of the brake disc and the wheel.

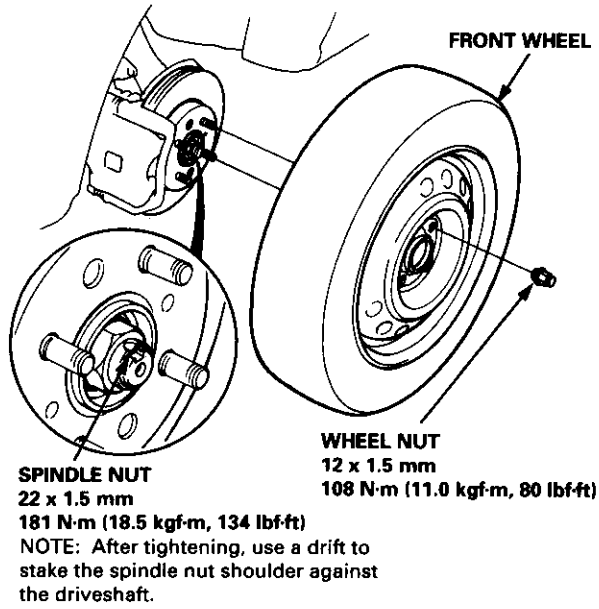

11. Check the front wheel alignment and adjust if necessary (see page 18-4).

Lower Ball Joint Replacement

1. Remove the knuckle (see page 18-10).
2. Remove the boot by prying the set ring off.
3. Check the boot for deterioration and damage, replace if it is necessary.
4. Remove the 40 mm circlip.
5. Install the special tools on the ball joint and tighten the castle nut.
6. Position the special tools over the ball joint as shown, then set the assembly in a vise. Press the ball joint out of the knuckle.

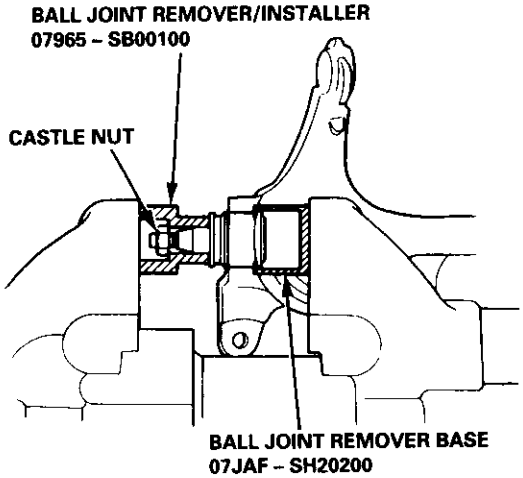

7. Place the ball joint in position by hand.
8. Install the special tools over the ball joint as shown, then press the ball joint in.

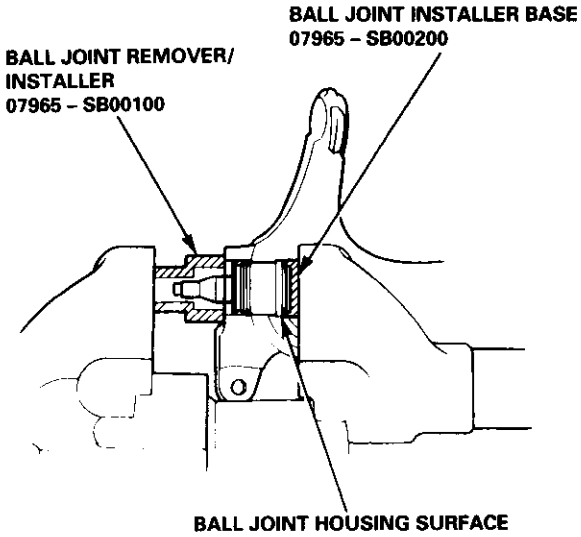

9. Install the 40 mm circlip.
10. Install the ball joint boot and set ring using the special tool (see page 18-18).

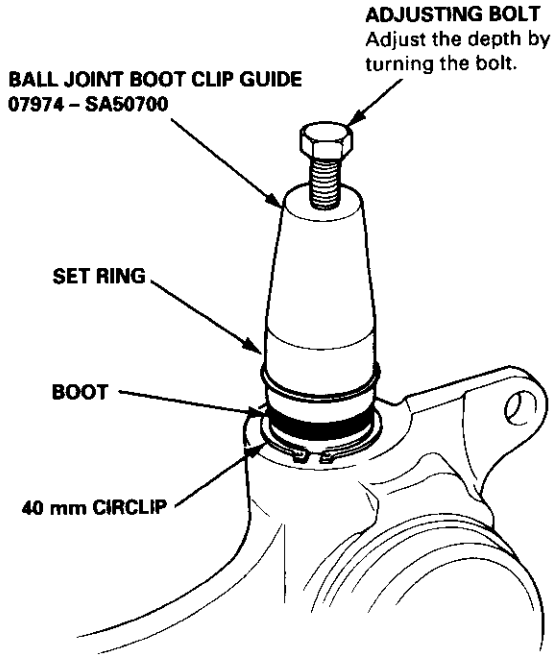

11. Install the knuckle (see page 18-15).
12. Check the front wheel alignment and adjust if necessary (see page 18-4).

Ball Joint Boot Replacement

1. Remove the boot set ring.

   CAUTION: Do not contaminate the boot installation section with grease.

2. Pack the interior of the boot and lip with grease.

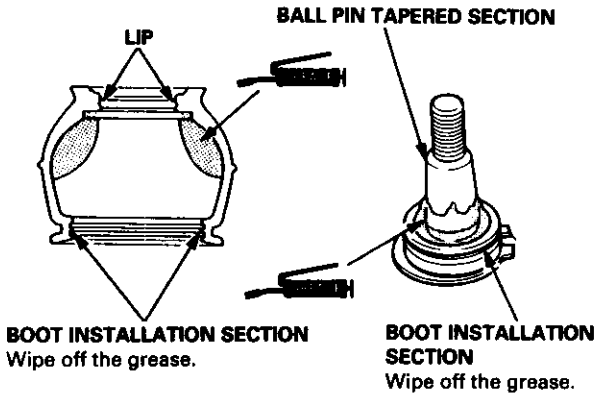

3. Wipe the grease off the sliding surface of the ball pin and pack with fresh grease.

   CAUTION:
   - **Keep grease off the boot installation section and the tapered section of the ball pin.**
   - **Do not allow dust, dirt, or other foreign materials to enter the boot.**

4. Install the boot in the groove of the boot installation section securely, then bleed air.

5. Install the upper and lower ball joint boot set rings using the special tools as follows:

   Lower ball joint: Adjust the special tool with the adjusting bolt until the end of the tool aligns with the groove on the boot. Slide the set ring over the tool and into position.

   Upper ball joint: Hold the tool over the ball joint, then slide the set ring over the tool and into position.

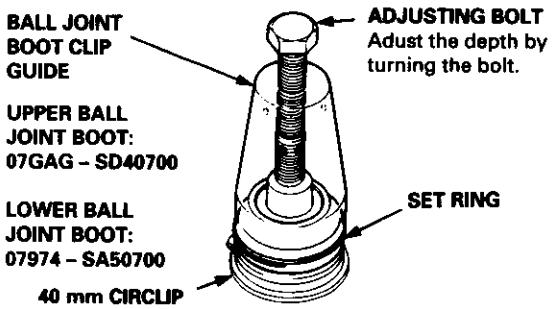

CAUTION: After installing the boot, check the ball pin tapered section for grease contamination and wipe it if necessary.

Removal/Inspection

CAUTION:
- **Replace the self-locking nuts after removal.**
- **Replace the self-locking bolts if you can easily thread a non-self-locking nut past their nylon locking inserts. (It should require 1 N·m (0.1 kgf·m, 0.7 lbf·ft) of torque to turn the nut on the bolt).**

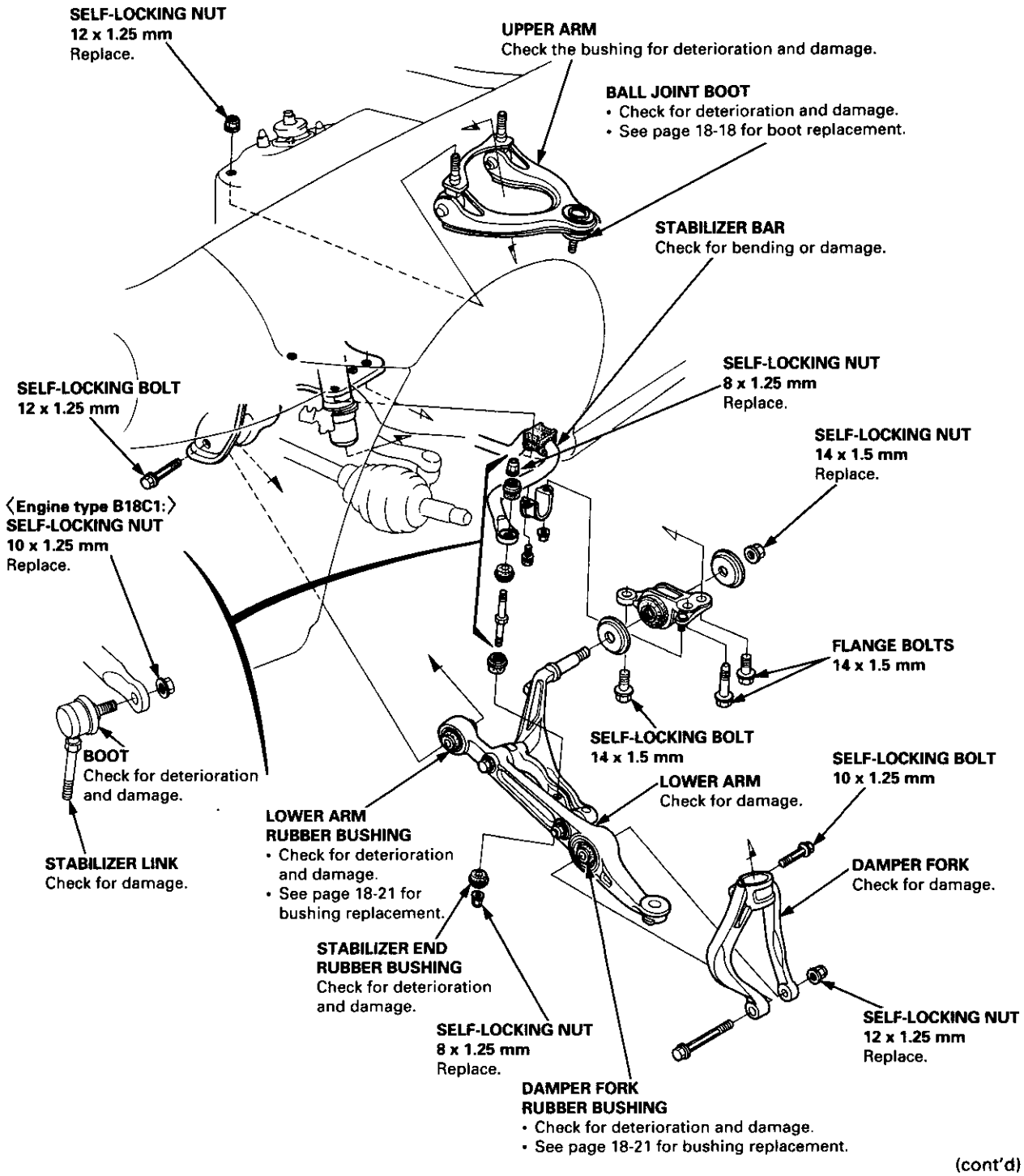

(cont'd)

Installation

CAUTION: The vehicle should be on the ground before any bolts or nuts connected to rubber mounts or bushings are tightened.

NOTE:
- Wipe off the dirt, oil or grease on the threads before tightening the fasteners.
- The right and left damper forks are not interchangeable. The left damper fork is marked with "VL" while the right damper fork is marked with "VR".
- The right and left upper arms are not interchangeable. The left upper arm is marked with "SRZ-L" while the right arm is marked with "SRZ-R".
- Before tightening the upper and lower mounting nuts on the stabilizer link, adjust the location of the link with the suspension under vehicle load.
- When installing the radius arm washers, the "FR" mark faces the front of the car.
- After installing the suspension arm, check the front wheel alignment and adjust if necessary (see page 18-4).

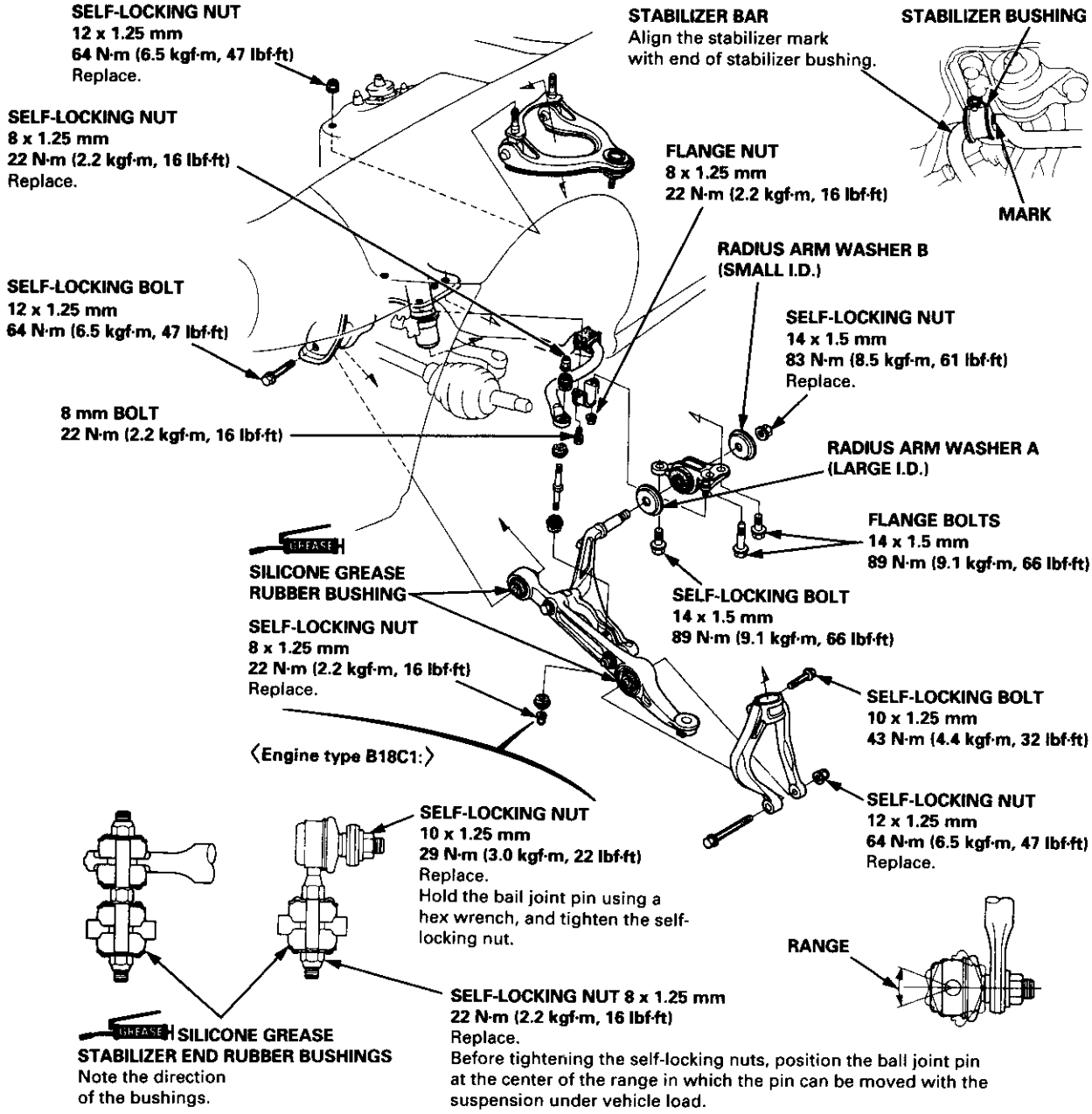

Lower Arm Bushing Replacement

1. Position the lower arm on the press with the machined surface facing down.

2. Adjust the bushing driver so that it matches the inner diameter of the bushing hole, then tighten the socket bolt securely.

3. Position the bushing driver on the bushing.

4. Remove the bushing by pressing on the bushing driver with a press as shown.

   CAUTION:
   - **Support the lower arm at machined surface as shown.**
   - **Be careful not to damage the inside of the bushing hole while pressing on the bushing.**

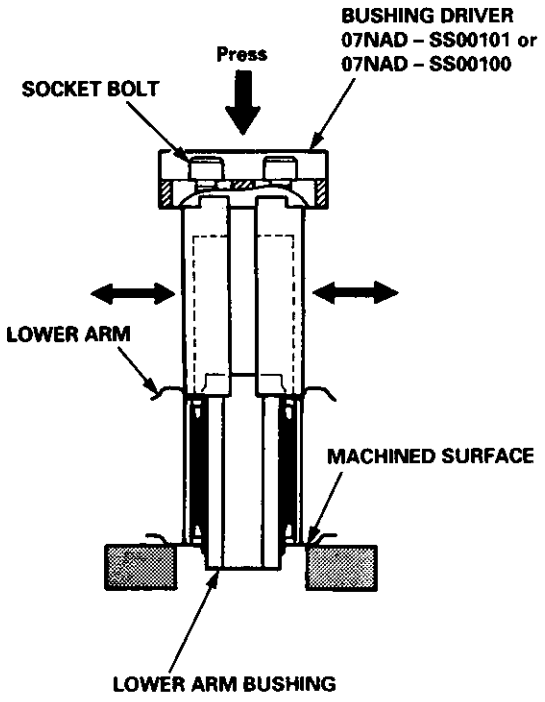

5. Position the lower arm on the press with the machined surface facing down.

6. Adjust the bushing driver so that it matches the inner diameter of the bushing hole, then tighten the socket bolt securely.

7. Position the bushing driver on the outer sleeve of the bushing.

8. Press the bushing into the lower arm using the bushing driver and a press until the edge of the bushing reaches on the plate as shown.

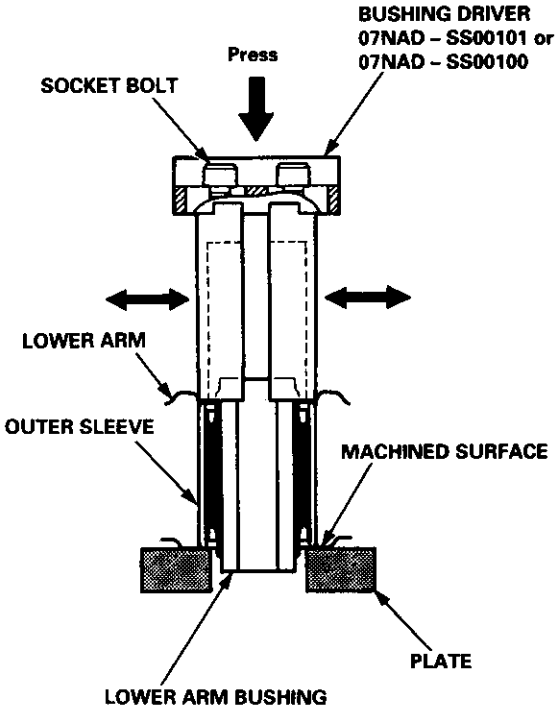

Front Damper

Removal

1. Remove the front wheels (see page 18-10).
2. Remove the brake hose mounting bolts from the damper.
3. Remove the self-locking bolt.
4. Remove the flange bolt and self-locking nut, then remove the damper fork.

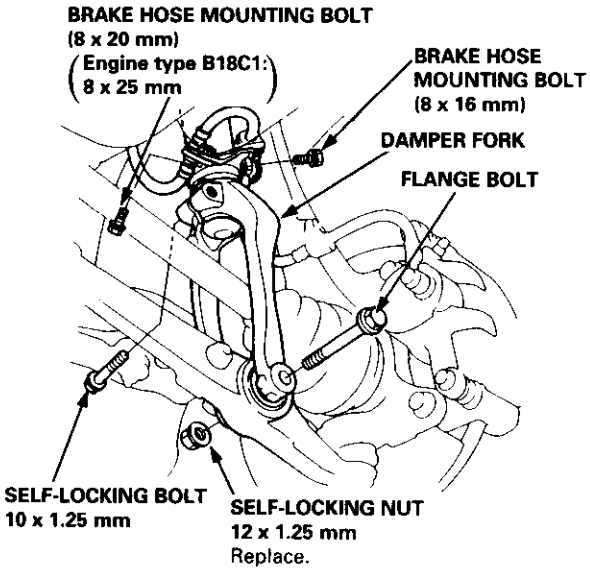

5. Remove the damper by removing the two flange nuts.

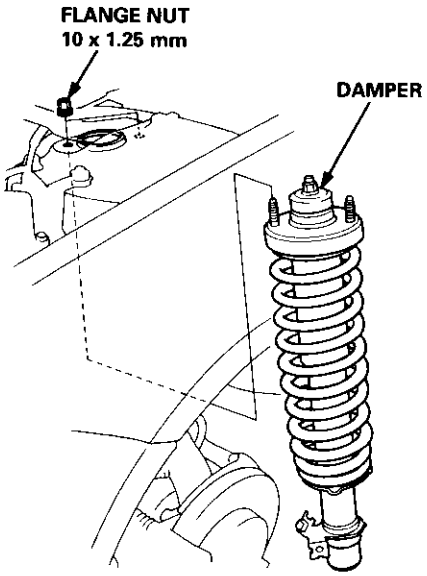

Disassembly/Inspection

Disassembly

1. Compress the damper spring with the spring compressor according to the manufacturer's instructions, then remove the self-locking nut.

   CAUTION: Do not compress the spring more than necessary to remove the nut.

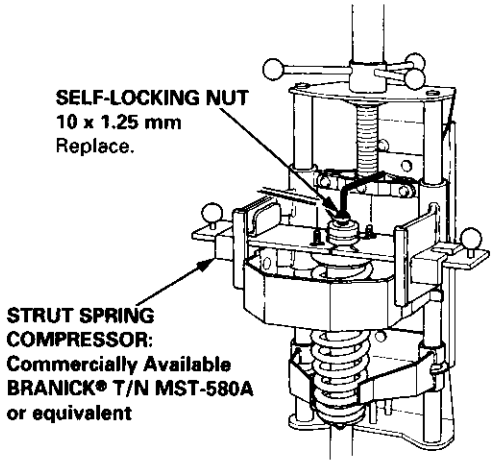

2. Remove the spring compressor, then disassemble the damper as shown on the next page.

Inspection

1. Reassemble all parts, except the spring.
2. Push on the damper as shown.
3. Check for smooth operation through a full stroke, both compression and extension.

   NOTE: The damper should move smoothly. If it does not (no compression or no extension), the gas is leaking, and the damper should be replaced.

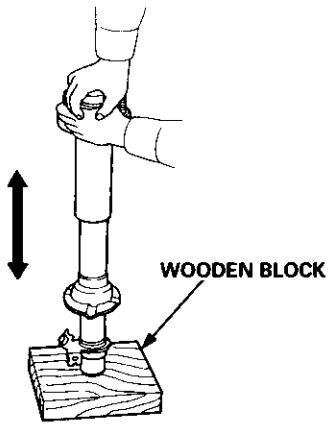

4. Check for oil leaks, abnormal noises or binding during these tests.

Inspection

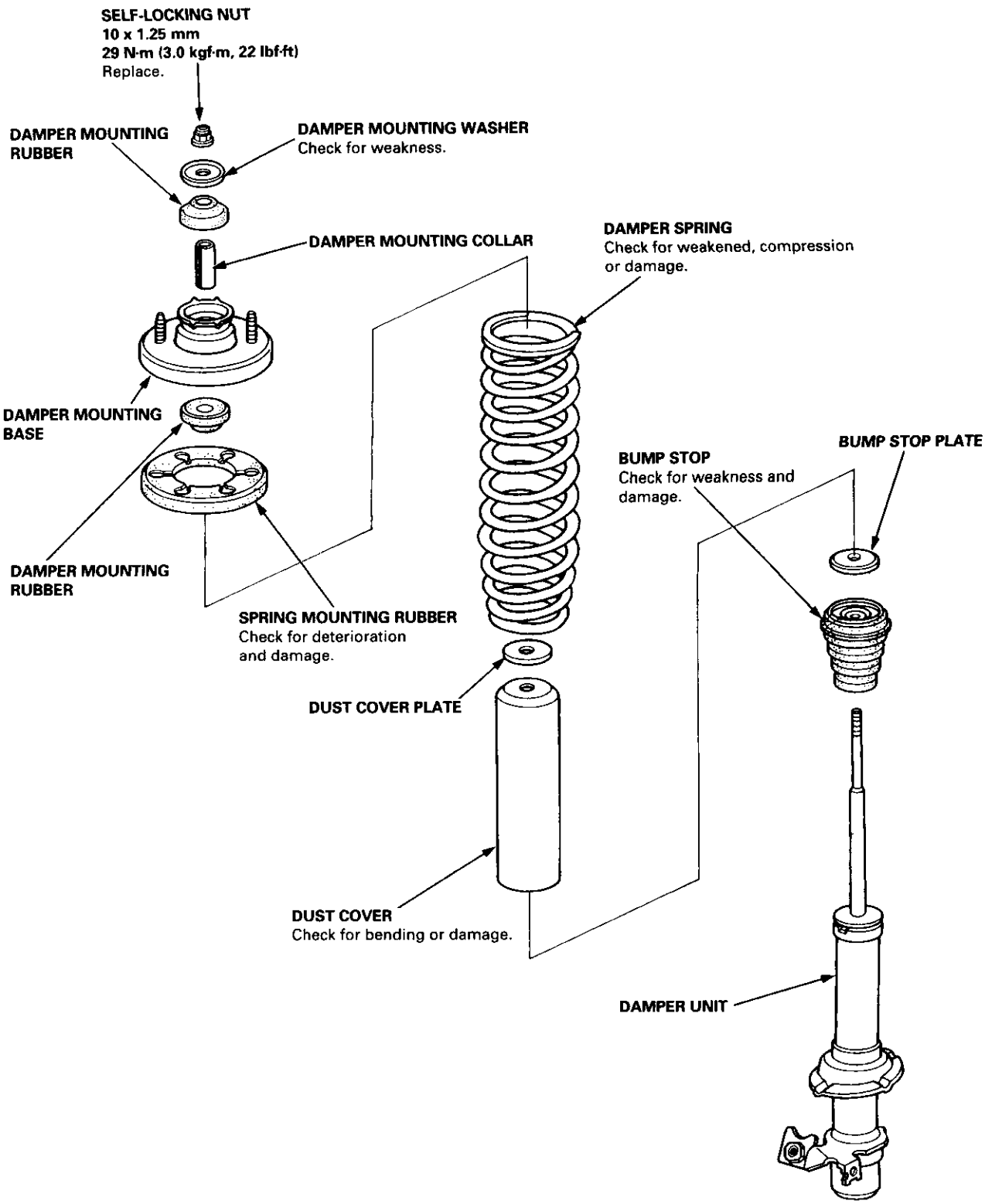
SELF-LOCKING NUT
10 x 1.25 mm
29 N·m (3.0 kgf·m, 22 lbf·ft)
Replace.
DAMPER MOUNTING RUBBER
DAMPER MOUNTING WASHER
Check for weakness.
DAMPER MOUNTING COLLAR
DAMPER SPRING
Check for weakened, compression or damage.
DAMPER MOUNTING BASE
BUMP STOP PLATE
BUMP STOP
Check for weakness and damage.
DAMPER MOUNTING RUBBER
SPRING MOUNTING RUBBER
Check for deterioration and damage.
DUST COVER PLATE
DUST COVER
Check for bending or damage.
DAMPER UNIT

Front Damper

Reassembly

1. Install the damper unit on a spring compressor.

   NOTE: Follow the manufacturer's instructions.

2. Assemble the damper in reverse order of disassembly except the damper mounting washer and self locking nut.

   NOTE: Align the bottom of damper spring and spring lower seat as shown.

3. Position the damper mounting base on the damper unit as shown.

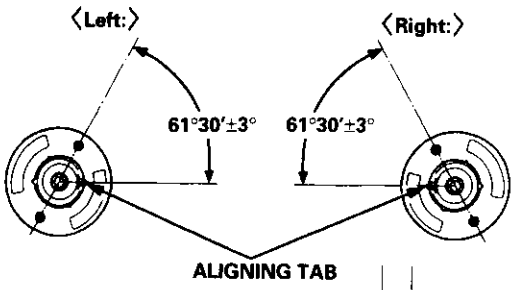

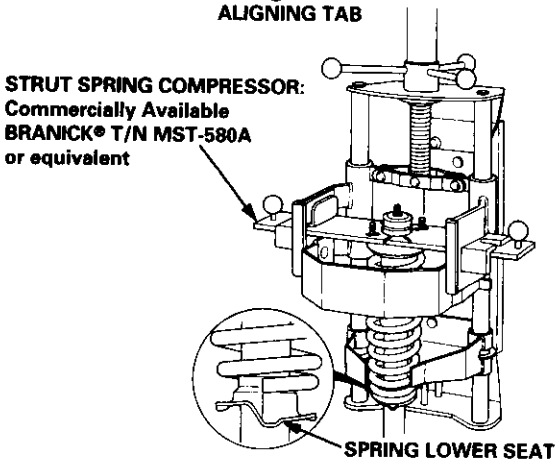

4. Compress the damper spring with the spring compressor.

5. Install the damper mounting washer, and loosely install a new self-locking nut.

6. Hold the damper shaft with a hex wrench and tighten the self-locking nut.

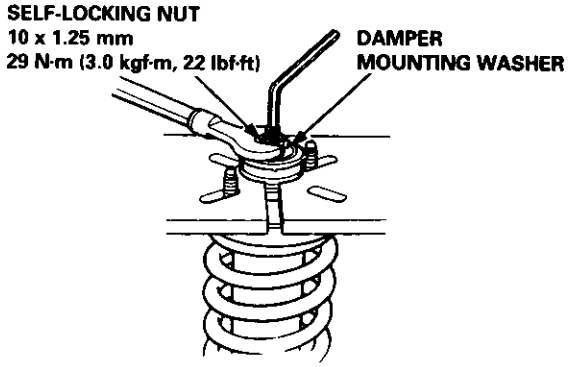

Installation

1. Loosely install the damper on the frame with the aligning tab facing inside, then loosely install the two flange nuts.

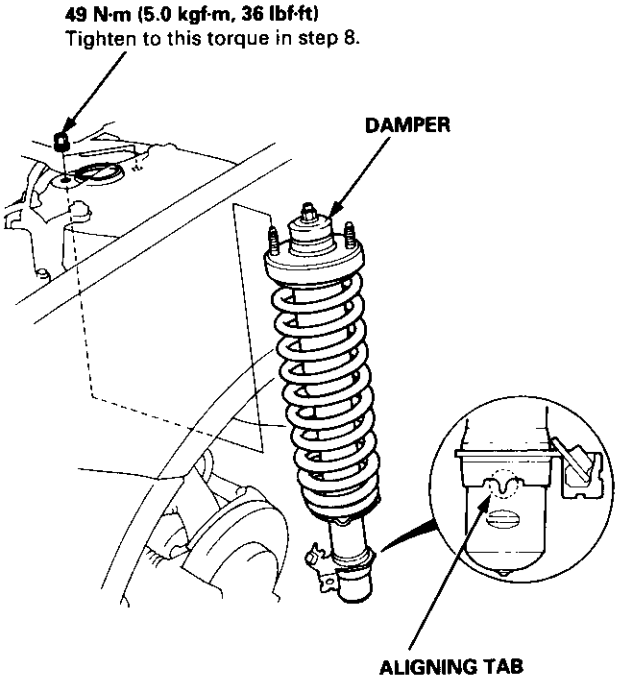

2. Install the damper fork over the driveshaft and onto the lower arm. Install the front damper in the damper fork so the aligning tab is aligned with the slot in the damper fork.

3. Loosely install the self-locking bolt.

4. Loosely install a new self-locking nut with the flange bolt.

5. Raise the knuckle with a floor jack until the car just lifts off the safety stand.

⚠ WARNING **The floor jack must be securely positioned or personal injury may result.**

6. Tighten the self-locking bolt.

7. Tighten the self-locking nut.

8. Tighten the flange nuts on the top of the damper to the specified torque.

9. Install the brake hose mounts with the brake hose mounting bolts.

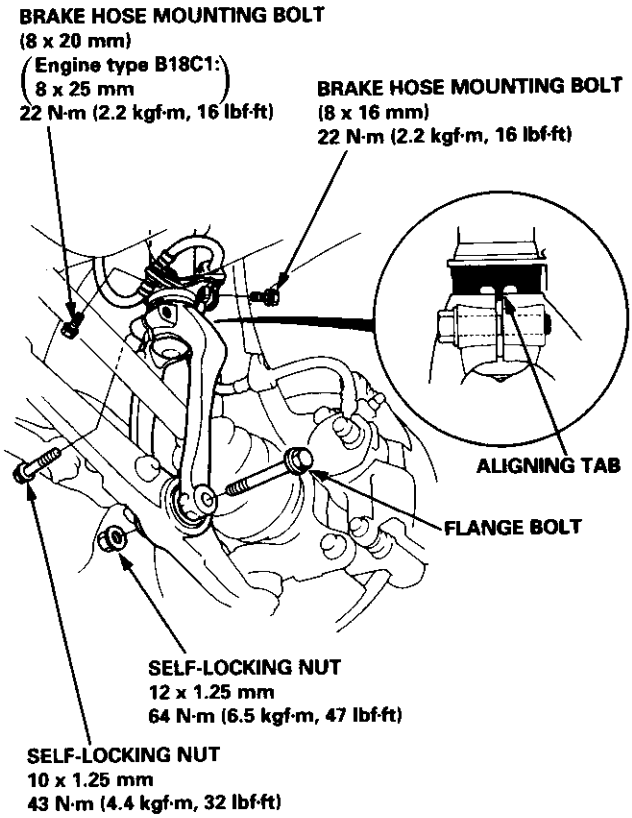

10. Install the front wheel (see page 18-16).

Torque Specifications

CAUTION:

- **Replace the self-locking nut after removal.**
- **Replace the self-locking bolts if you can easily thread a non-self-locking nut past their nylon locking inserts. (It should require 1 N·m (0.1 kgf·m, 0.7 lbf·ft) of torque to turn the nut on the bolt).**
- **The vehicle should be on the ground before any bolts or nuts connected to rubber mounts or bushings are tightened.**

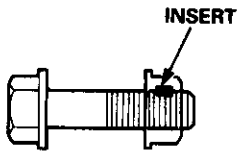

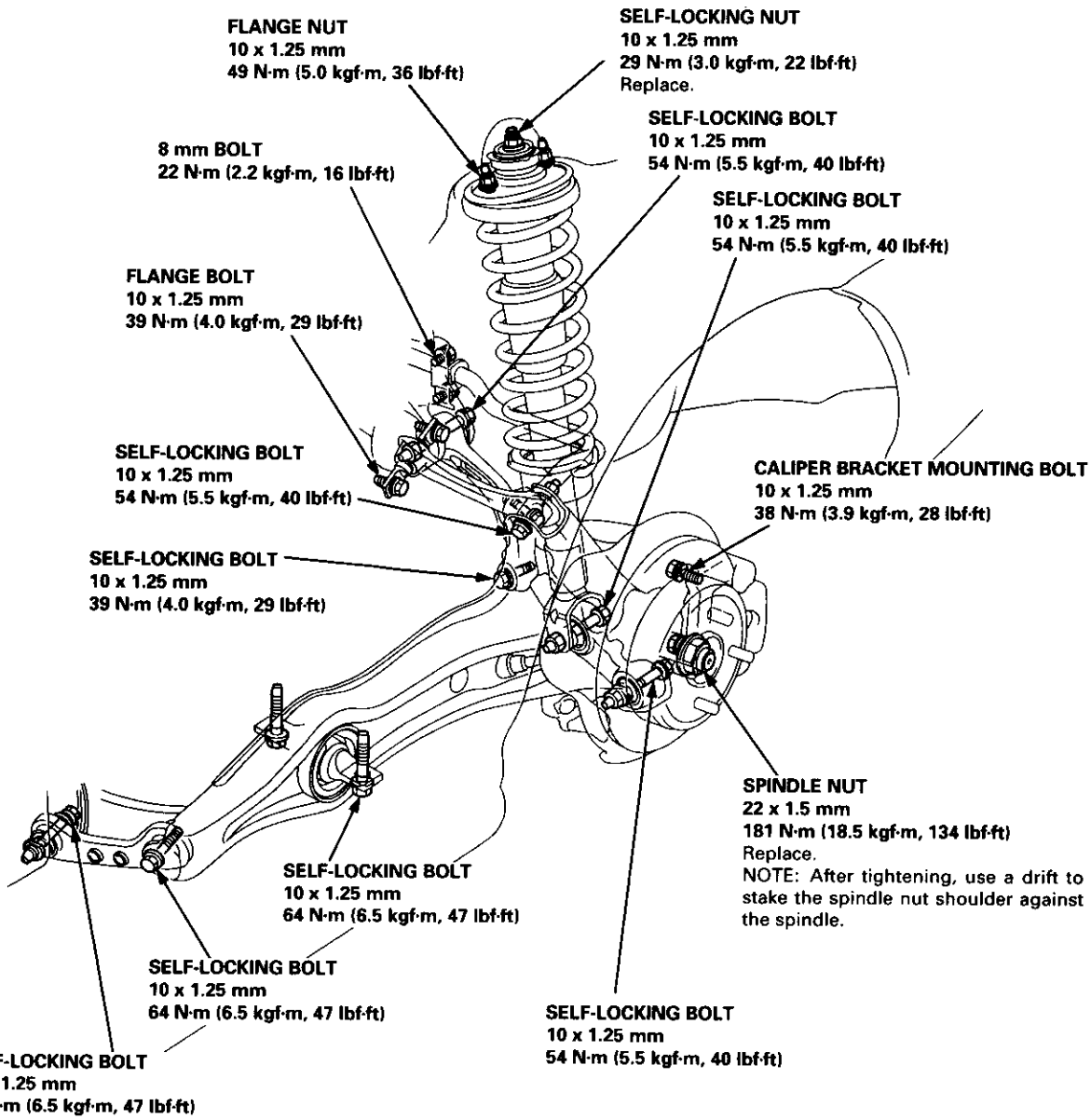

Illustrated Index

NOTE:
- Use only genuine Honda wheel weights for aluminum wheels. Non-genuine wheel weights may corrode and damage the aluminum wheels.
- On the aluminum wheels, remove the center cap from the inside of the wheel after removing the wheel.
- Before installing the brake disc, clean the mating surfaces of the rear hub and the brake disc.
- Before installing the wheel, clean the mating surfaces of the brake disc and the wheel.

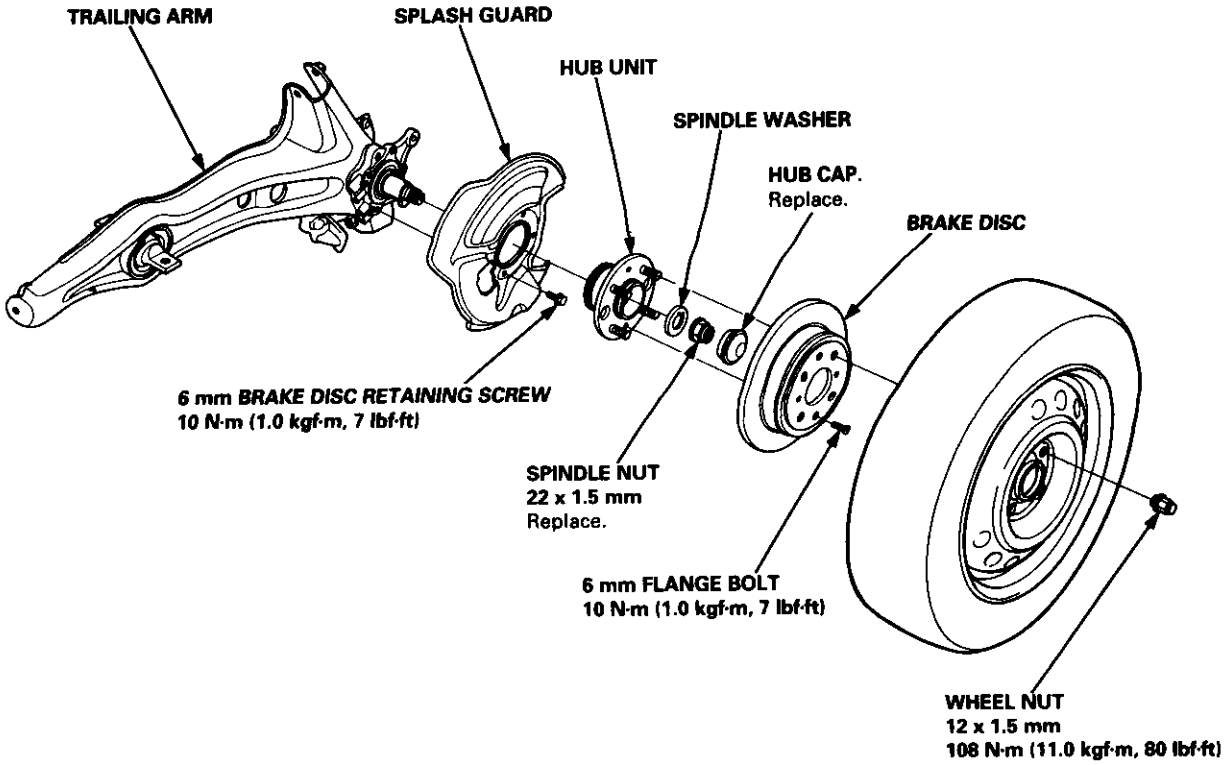

Hub Bearing Unit

Removal

1. Loosen the wheel nuts slightly.
2. Raise the rear of car, and support it with safety stands in the proper locations (see section 1).
3. Remove the wheel nuts and rear wheel.
4. Pull the parking brake lever up.
5. Remove the hub cap.
6. Raise the locking tab on the spindle nut, then remove the nut.

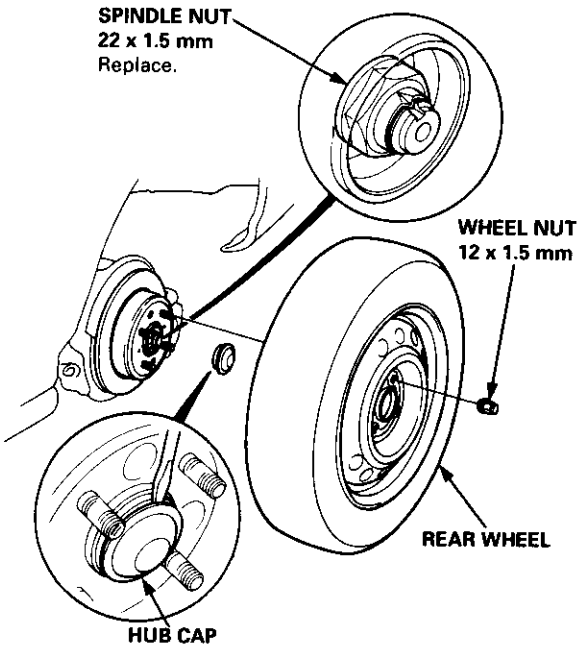

7. Remove the 6 mm brake disc retaining screws.

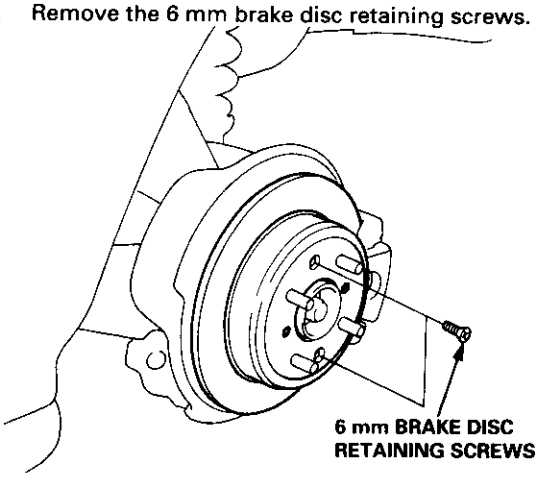

8. Release the parking brake lever.
9. Remove the 6 mm flange bolts and caliper shield.

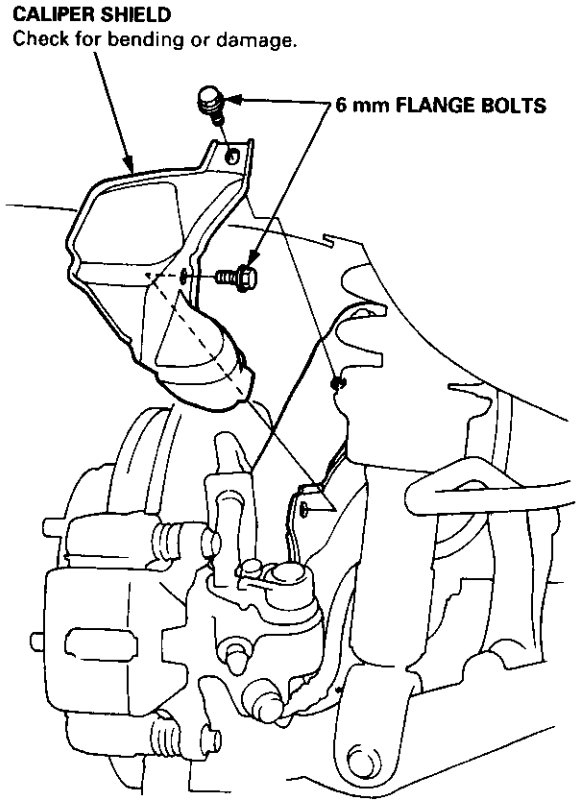

10. Remove the brake hose mounting bolt.

11. Remove the caliper bracket mounting bolts and hang the caliper to one side.

CAUTION: To prevent accidental damage to the caliper or brake hose, use a short piece of wire to hang the caliper from the undercarriage.

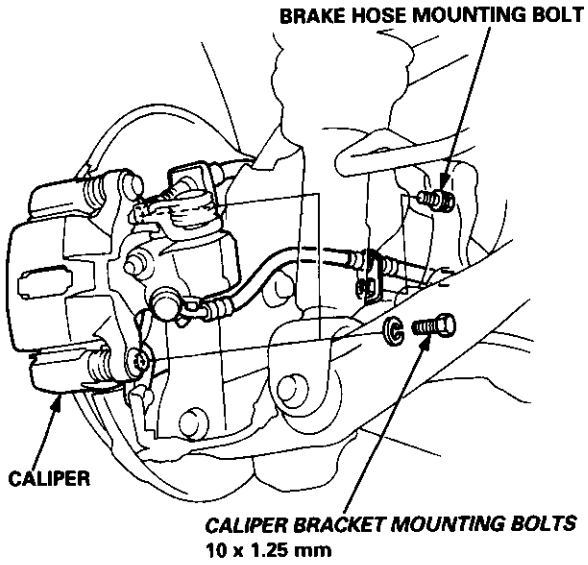

12. Screw two 8 x 1.25 mm bolts into the disc to push it away from the hub.

NOTE: Turn each bolt two turns at a time to prevent cocking the disc excessively.

13. Remove the brake disc.

14. Remove the hub unit from the knuckle.

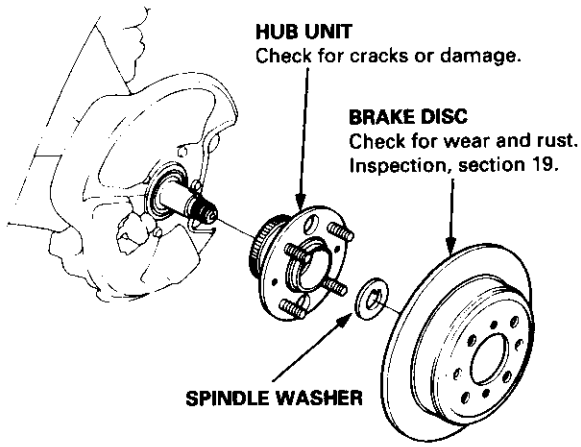

Installation

1. Install the hub unit, spindle washer and brake disc.

NOTE:
- Wash the bearing and spindle thoroughly in high flash point solvent before reassembly.
- Before installing the brake disc, clean the mating surfaces of the rear hub and the brake disc.

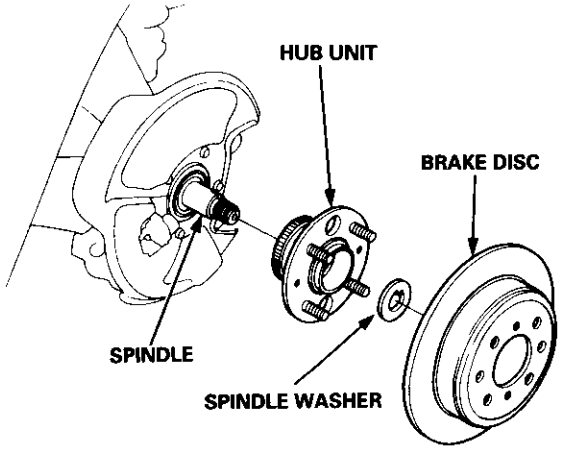

2. Install the brake caliper with the caliper bracket mounting bolts.

3. Install the brake hose with the brake hose mounting bolt.

CAUTION: Be careful not to twist the hose more than necessary.

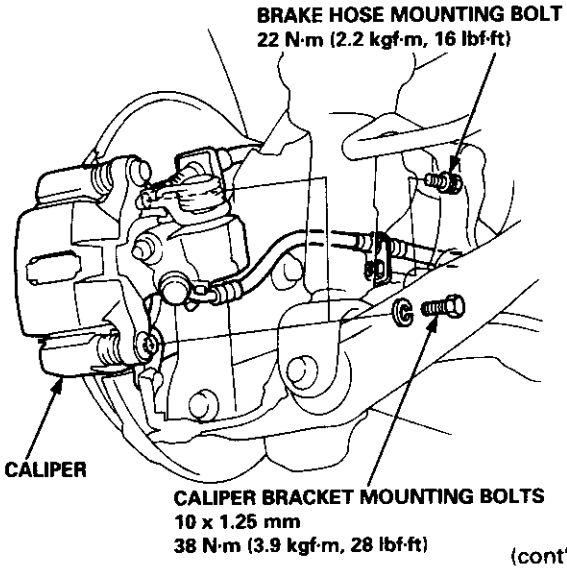

(cont'd)

Hub Bearing Unit (cont'd)

4. Install the caliper shield with the 6 mm flange bolts.

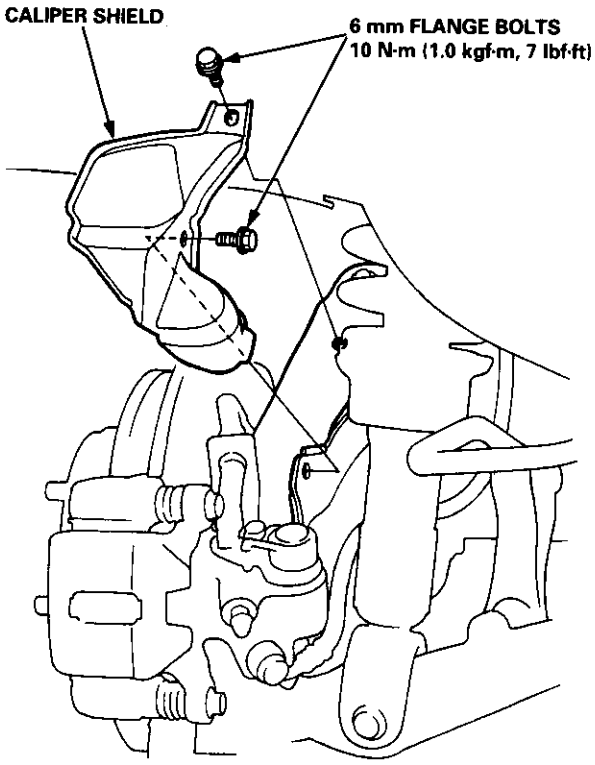

5. Tighten the 6 mm brake disc retaining screws.

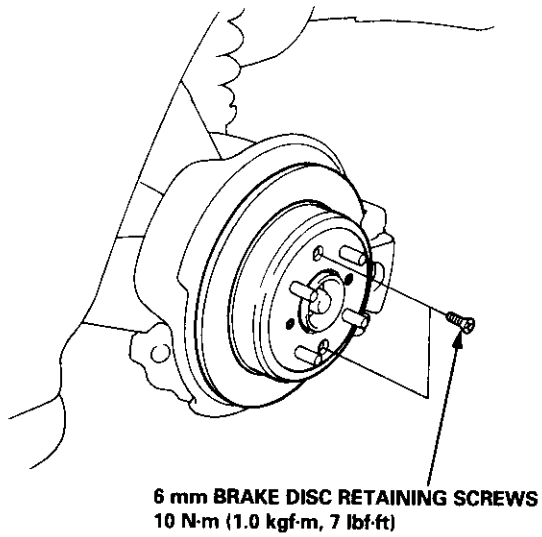

6. Install a new spindle nut, then tighten the nut.

7. Install a new hub cap.

8. Install the rear wheel with the wheel nuts.

   NOTE: Before installing the wheel, clean the mating surfaces of the brake disc and the wheel.

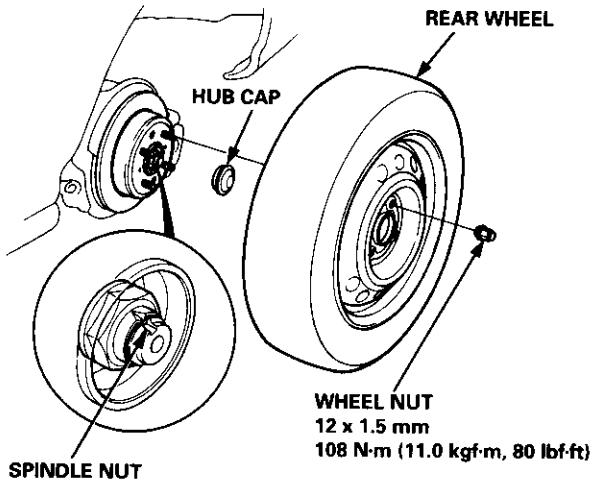

NOTE: After tightening, use a drift to stake the spindle nut shoulder against the spindle.

Suspension Arms

Removal/Inspection

CAUTION: Replace the self-locking bolts if you can easily thread a non-self-locking nut past their nylon locking inserts. (It should require 1 N·m (0.1 kgf·m, 0.7 lbf·ft) of torque to turn the nut on the bolt).

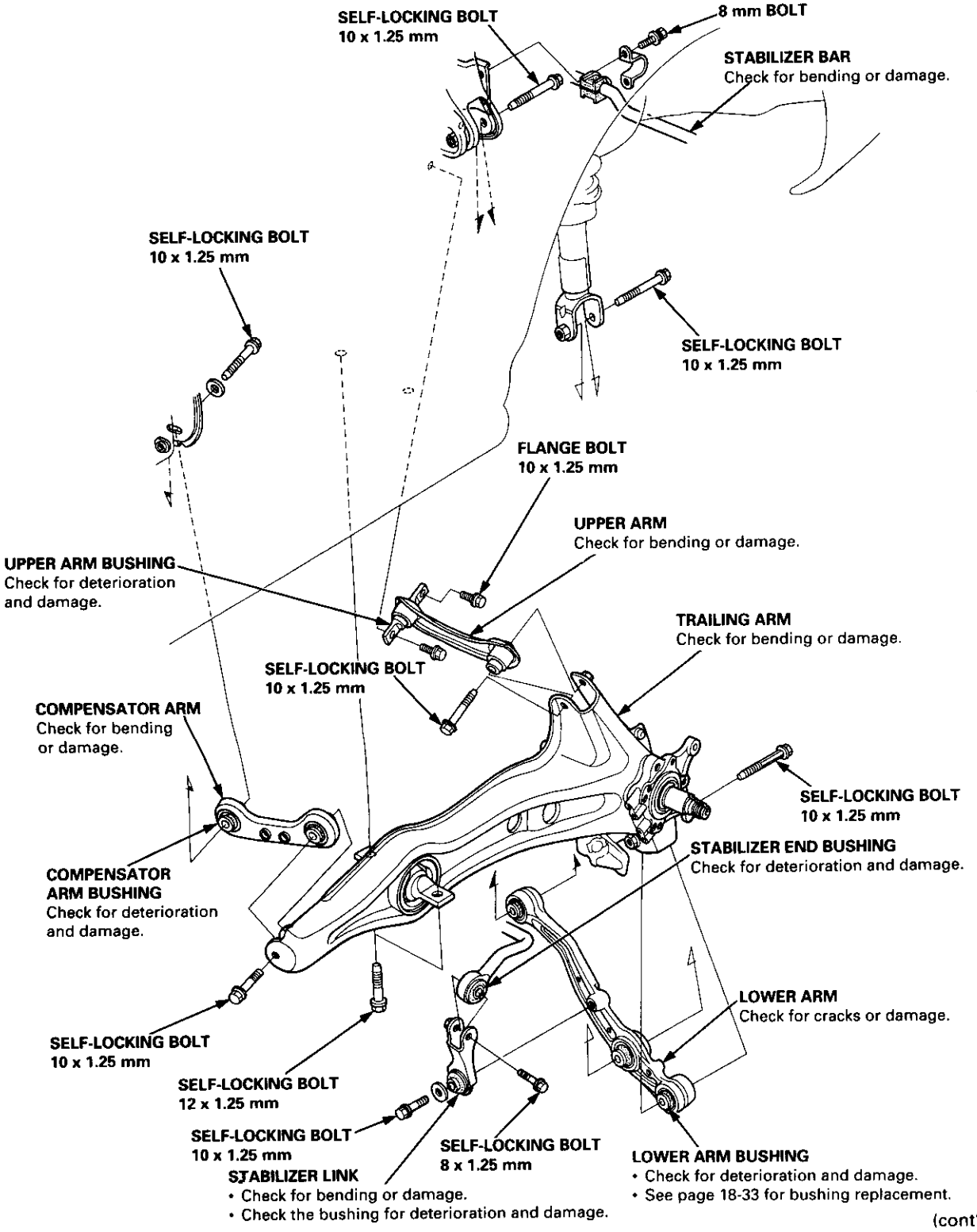

(cont'd)

Installation

CAUTION: The vehicle should be on the ground before any bolts or nuts connected to rubber mounts or bushings are tightened.

NOTE:
- Make sure the self-locking bolts on the compensator arms are installed in the same direction.
- "LV" is stamped on the left lower arm and "RV" on the right lower arm.
- "↑ UP LSR" is stamped on the left upper arm and "↑ UP RSR" on the right upper arm.
- The right and left compensator arm are symmetrical. Install so the "↑ UP" mark stamped side faces forward.
- After installing the suspension arm, check the rear wheel alignment and adjust if necessary (see page 18-4).

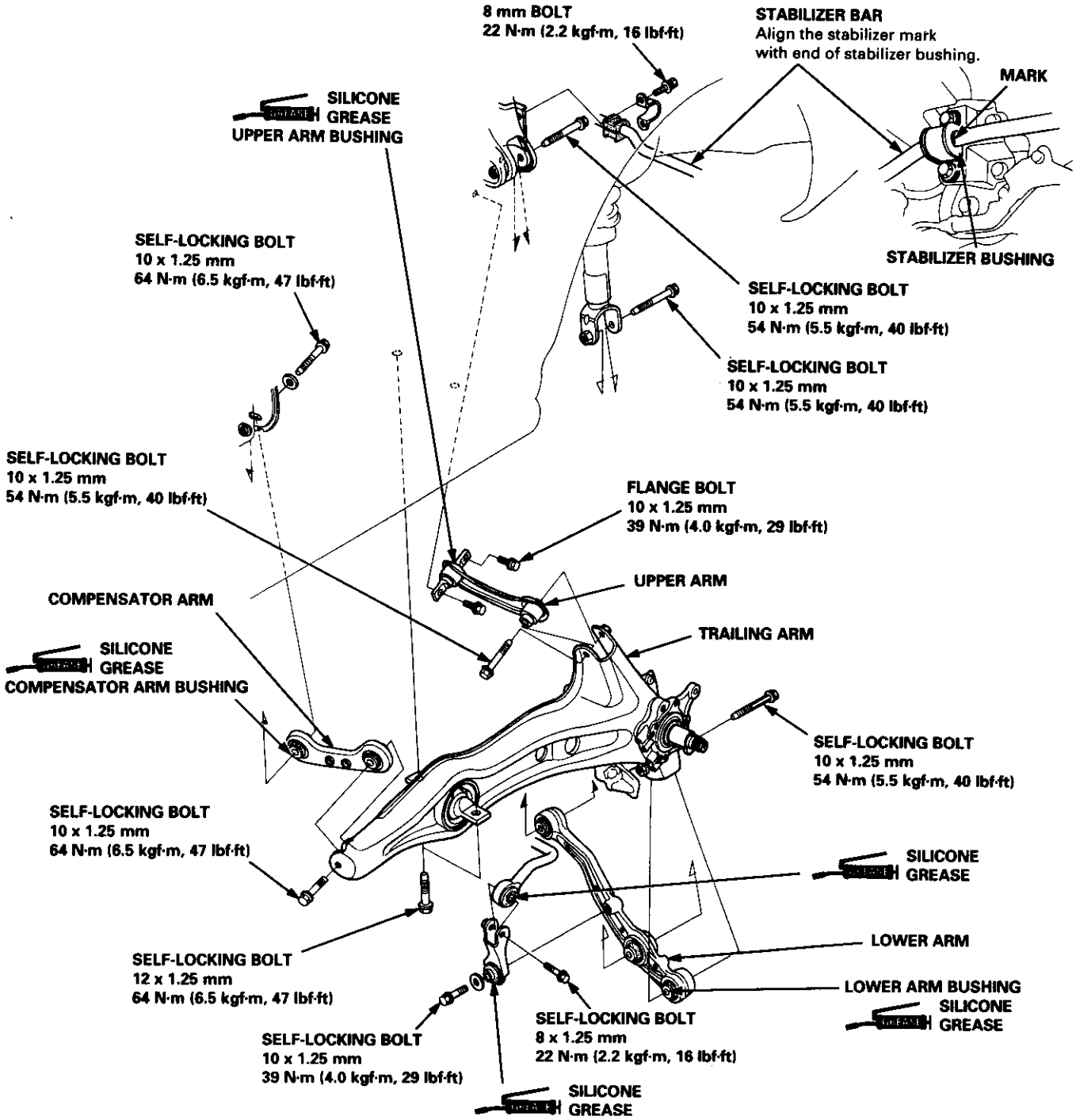

Lower Arm Bushing Replacement

1. Mark on the machined surface of the lower arm so that they are in line with the gaps on the inter ring.

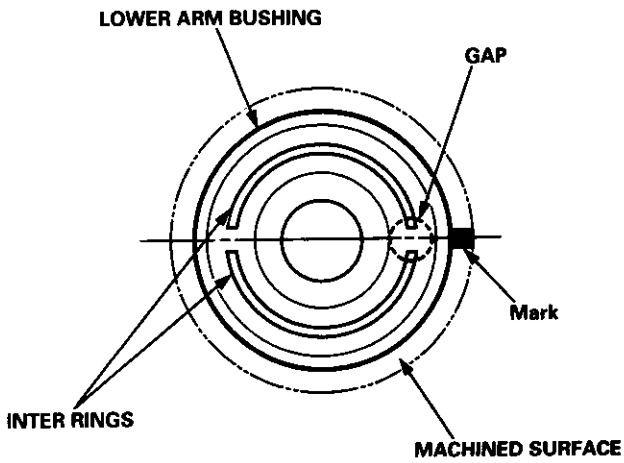

2. Position the lower arm on the press with the machined surface facing down.

3. Adjust the bushing driver so that it matches the inner diameter of the bushing hole, then tighten the socket bolt securely.

4. Position the bushing driver on the bushing.

5. Remove the bushing by pressing on the bushing driver with a press as shown.

CAUTION:
- **Support the lower arm at machined surface as shown.**
- **Be careful not to damage the inside of the bushing hole while pressing on the bushing.**

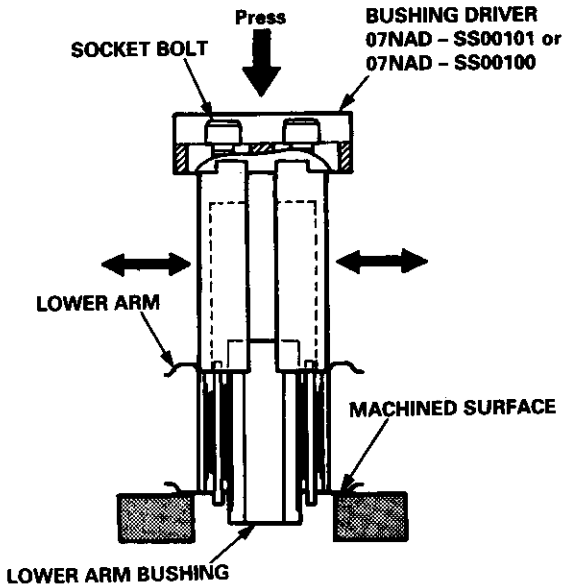

6. Position the lower arm bushing by aligning the gap on the bushing with the mark on the lower arm when viewed from the top.

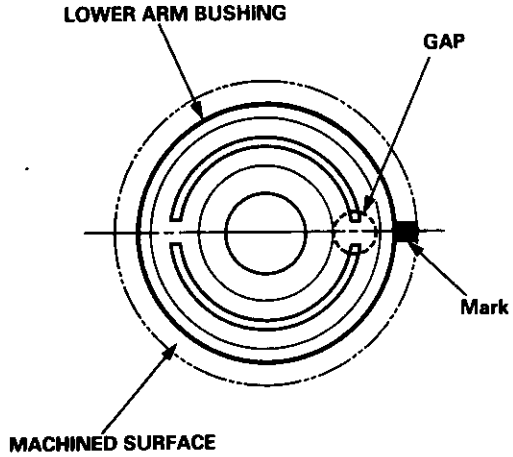

7. Adjust the bushing driver so that it matches with the outer diameter of the bushing.

8. Position the bushing driver on the outer sleeve of the bushing.

9. Press the bushing into the lower arm using the bushing driver and a press until the edge of the bushing aligns with machined surface on the lower arm as shown.

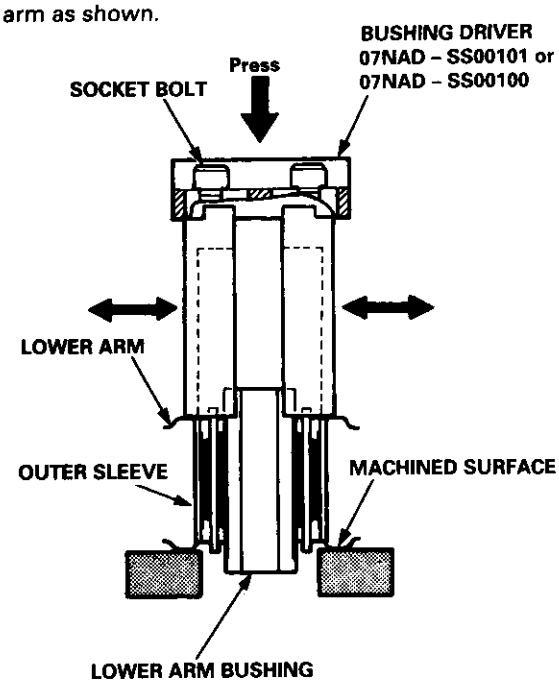

Rear Damper

Removal

1. Remove the rear wheels (see page 18-28).
2. Remove the damper access panel.

   — Sedan only: Remove the trunk side panel (see section 20).
3. Remove the damper cap.
4. Remove the two flange nuts.

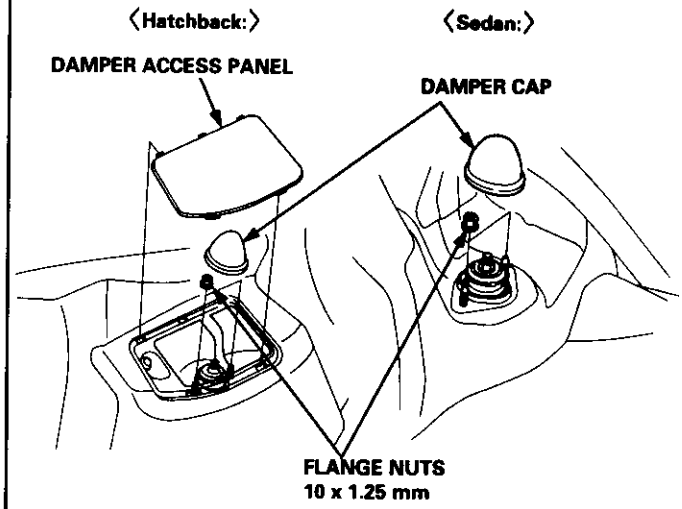

5. Remove the wheel sensor wire brackets (for cars with ABS).

   NOTE: Do not disconnect the wheel sensor connector.

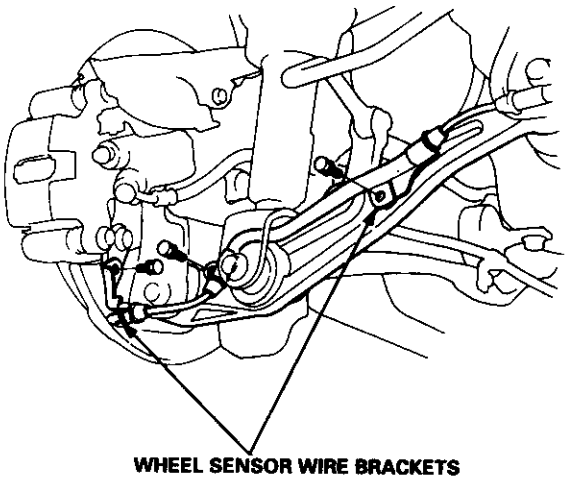

6. Remove the self-locking bolt on the damper.
7. Remove the self-locking bolt that connects the lower arm to the trailing arm.

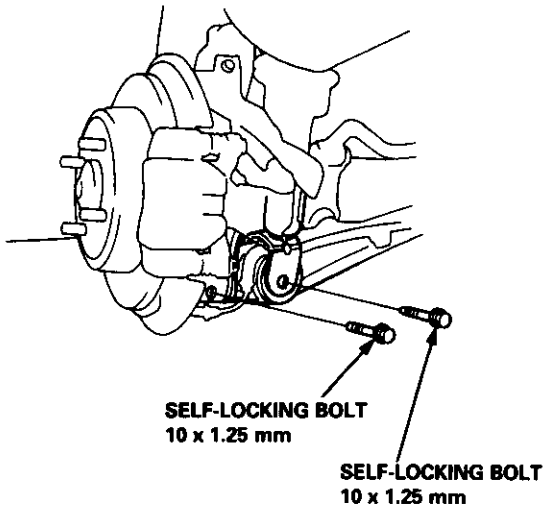

8. Lower the rear suspension and remove the damper.

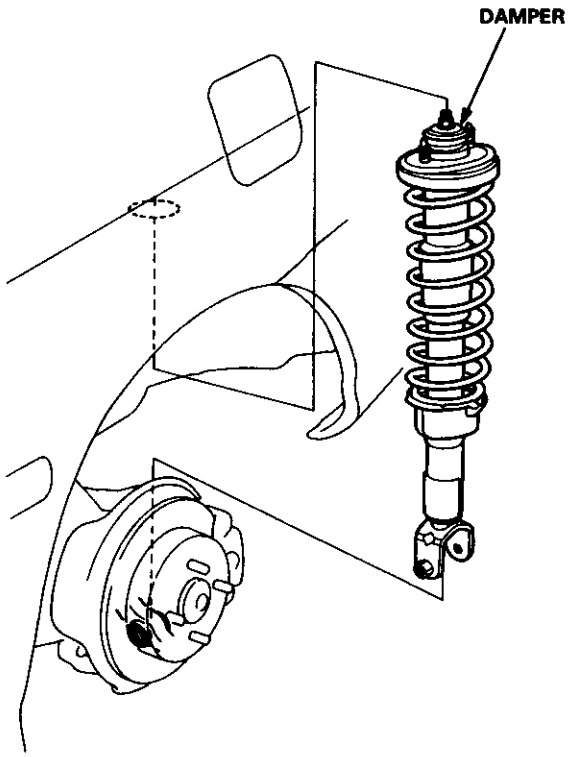

Disassembly/Inspection

Disassembly

1. Compress the damper spring with the spring compressor according to the manufacturer's instructions, then remove the self-locking nut.

   CAUTION: Do not compress the spring more than *necessary to remove the self-locking nut.*

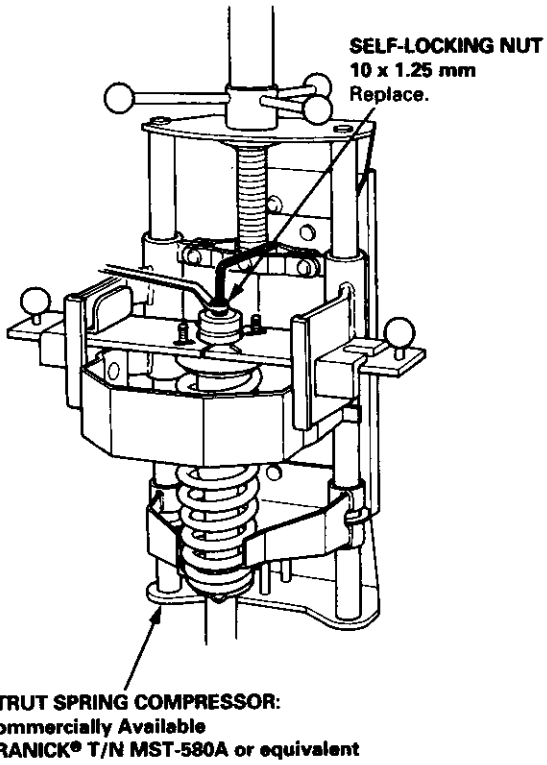

2. Remove the spring compressor, then disassemble the damper as shown on the next page.

Inspection

1. Reassemble all parts, except the spring.
2. Push on the damper as shown.
3. Check for smooth operation through a full stroke, *both compression and extension.*

   NOTE: The damper should move smoothly. If it does not (no compression or no extension), the gas is leaking, and the damper should be replaced.

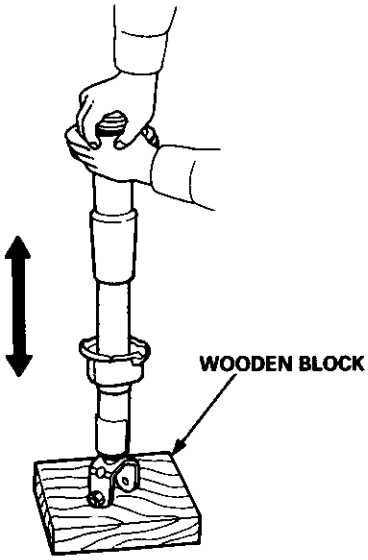

4. Check for oil leaks, abnormal noises or binding during these tests.

Rear Damper

Inspection

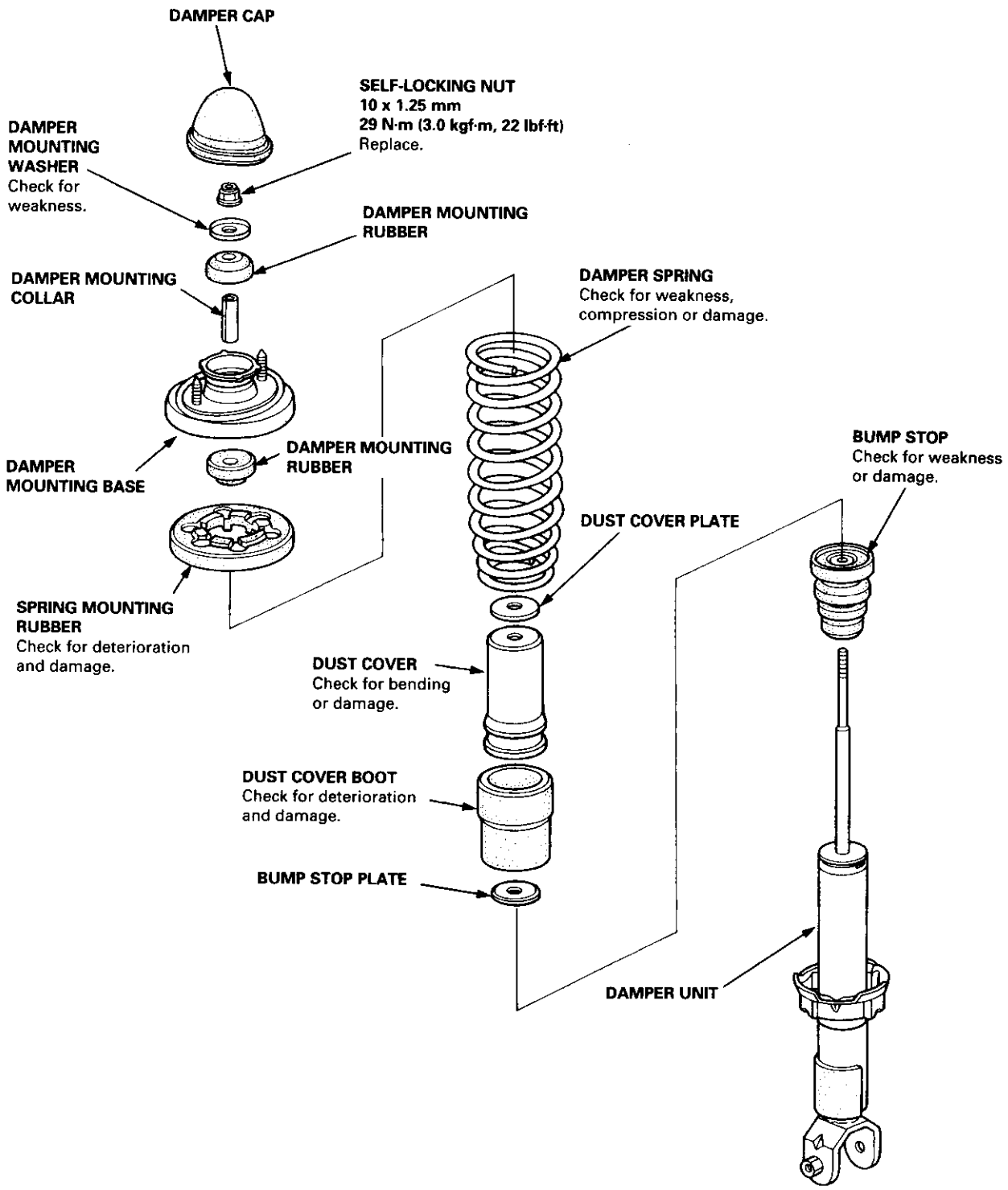

Reassembly

1. Install the damper unit on a spring compressor.

   NOTE: Follow the manufacturer's instructions.

2. Assemble the damper in reverse order of disassembly except the damper mounting washer and self-locking nut.

   NOTE: Align the bottom of damper spring and spring lower seat as shown.

3. Position the damper mounting base on the damper unit as shown.

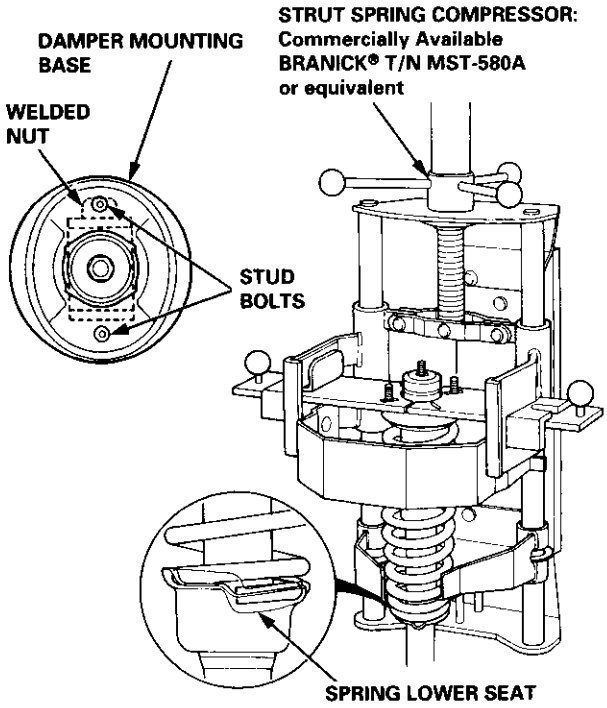

4. Compress the damper spring with the spring compressor.

5. Install the damper mounting washer, and loosely install a new self-locking nut.

6. Hold the damper shaft with a hex wrench and tighten the self-locking nut.

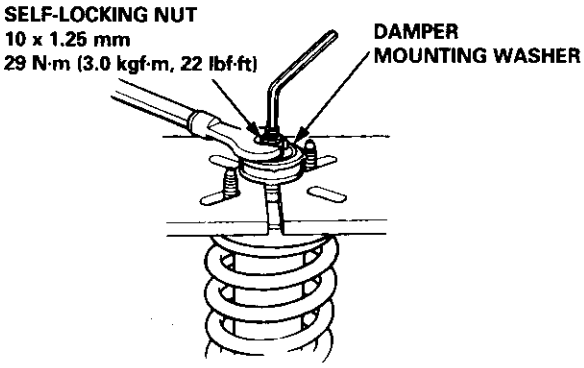

Installation

1. Lower the rear suspension and position the damper with the welded nut pointed toward the front of the car.

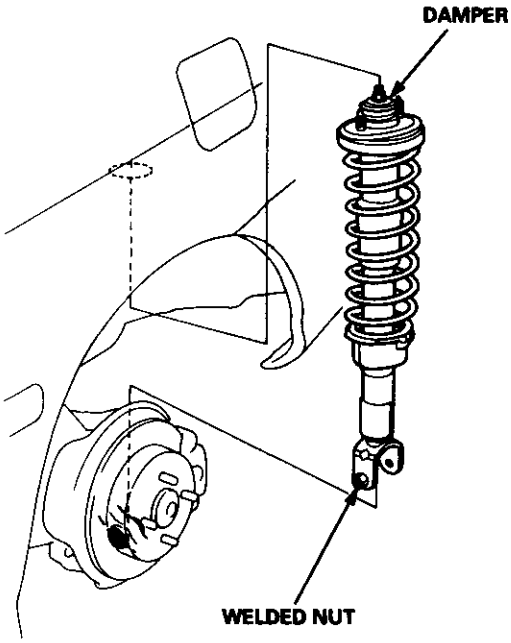

2. Loosely install the two flange nuts.

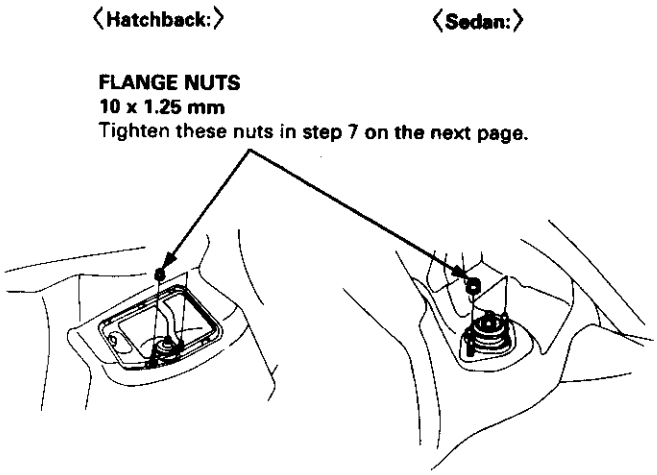

3. Install the wheel sensor wire bracket.

   NOTE: Be careful when installing the sensors to avoid twisting wires.

4. Raise the rear suspension with a floor jack until the car just lifts off the safety stand.

   ⚠ WARNING The floor jack must be securely positioned or personal injury may result.

5. Install the damper mounting bolt and the self-locking bolt, then tighten the bolts.

   NOTE: The damper mounting bolt and the self-locking bolt should be tightened with the damper under vehicle load.

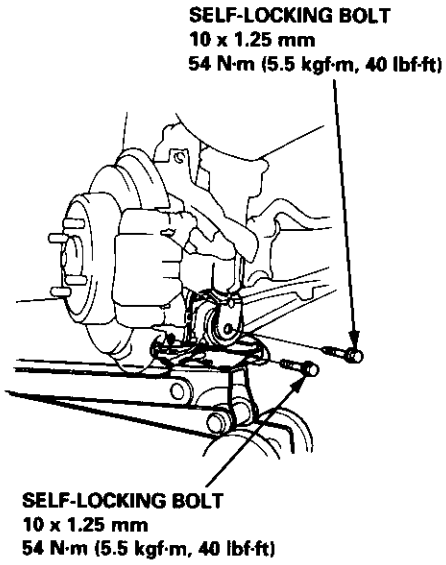

6. Tighten the three wheel sensor wire bracket bolts (for cars with ABS).

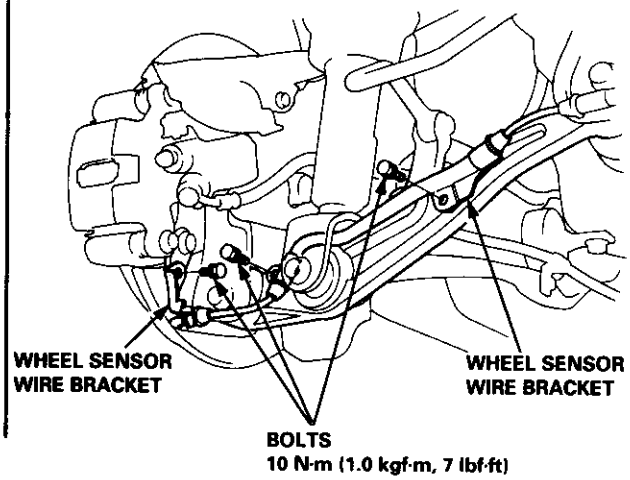

7. Tighten the two flange nuts on top of the damper to the specified torque.

8. Install the damper cap.

9. Install the damper access panel by aligning the tabs on the panel.

—. Sedan only: Install the trunk side panel (see section 20).

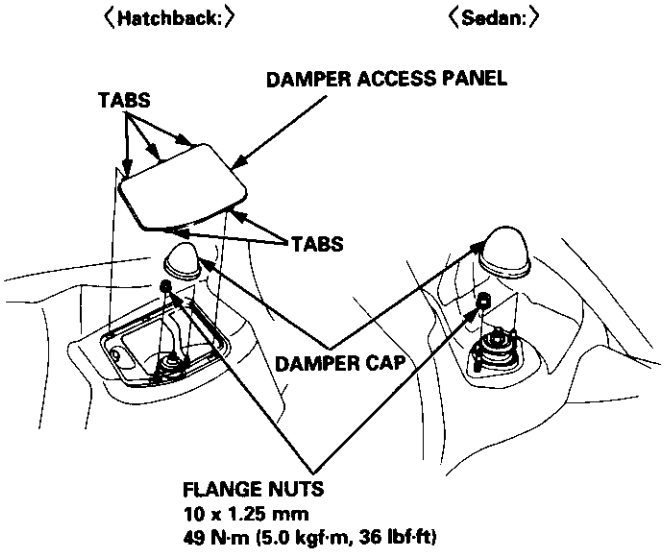

11. Install the rear wheels (see page 18-30).

Brakes

Conventional Brakes 19-1
Anti-lock Brake System (ABS) 19-31

Brakes

Special Tools 19-2
Component Location
  Index 19-3
Inspection and Adjustment
  Brake Pedal 19-4
  Parking Brake 19-5
  Bleeding 19-6
Front Brake Pads
  Inspection and Replacement 19-7
Front Brake Disc
  Disc Runout Inspection 19-9
  Disc Thickness and Parallelism
    Inspection 19-9
Front Brake Caliper
  Disassembly 19-10
  Reassembly 19-11
Master Cylinder
  Removal 19-13
  Inspection/Disassembly 19-13
  Pushrod Clearance Adjustment ... 19-14
  Installation 19-15
Brake Booster
  Inspection 19-15
  Replacement 19-16
Rear Brake Pads
  Inspection and Replacement 19-16
Rear Brake Disc
  Disc Runout Inspection 19-19
  Disc Thickness and Parallelism
    Inspection 19-19
Rear Brake Caliper
  Disassembly 19-20
  Reassembly 19-23
Brake Hoses/Pipes
  Inspection 19-27
  Hose Replacement 19-28
Parking Brake
  Inspection and Replacement 19-29

Special Tools

Ref. No.	Tool Number	Description	Qty	Page Reference
①	07HAE–SG00100	Brake Spring Compressor	1	19-21, 25
②	07JAG–SD40100	Pushrod Adjustment Gauge	1	19-14
③	07914–SA50000	Snap Ring Pliers	1	19-21, 25
④	07916–6390001	Locknut Wrench	1	19-20, 25

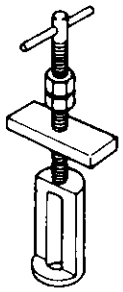

①

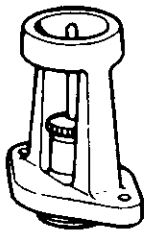

②

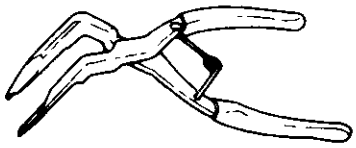

③

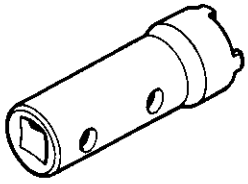

④

Component Location

Index

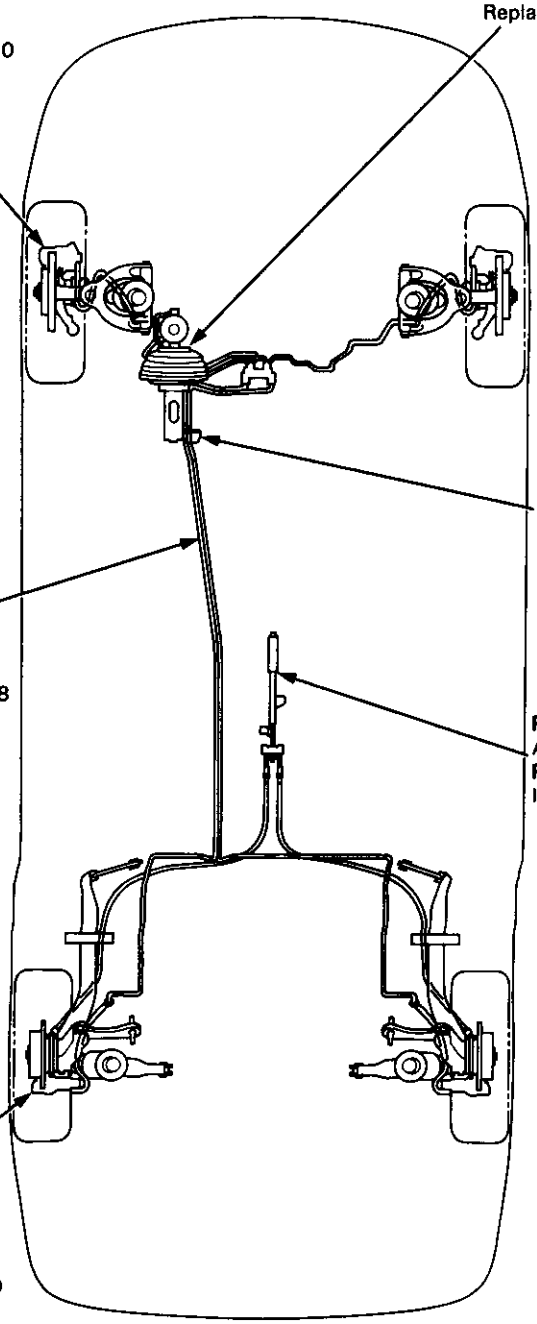

MASTER CYLINDER
Removal, page 19-13
Inspection/Disassembly, page 19-13
Pushrod Clearance Adjustment, page 19-14
Installation, page 19-15
BRAKE BOOSTER
Inspection, page 19-15
Replacement. 19-16

FRONT BRAKES
Front Brake Pads, page 19-7
Front Brake Disc, page 19-9
Front Brake Caliper, page 19-10

BRAKE PEDAL
Inspection and
Adjustment, page 19-4

BRAKE HOSES/PIPES
Inspection, page 19-27
Hose Replacement, page 19-28

PARKING BRAKE
Adjustment, page 19-5
PARKING BRAKE CABLE
Inspection and Replacement, page 19-29

REAR DISC BRAKES
Rear Brake Pads, page 19-16
Rear Brake Disc, page 19-19
Rear Brake Caliper, page 19-20

Brake Pedal

Pedal Height

1. Disconnect the brake switch connector, loosen the brake switch locknut and back off the brake switch until it is no longer touching the brake pedal.

2. Turn up the floor mat and measure the pedal height from the left side center of the pedal pad.

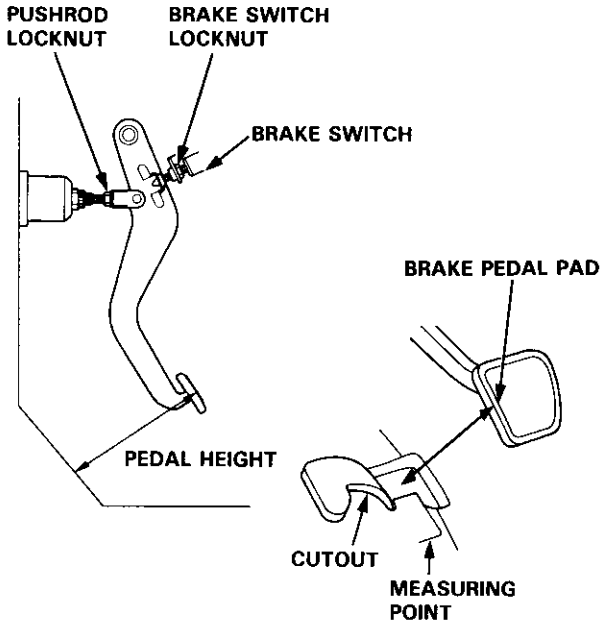

Standard Pedal Height (with floor mat removed):
M/T: 160 mm (6.3 in) max.
A/T: 165 mm (6.5 in) max.

3. Loosen the pushrod locknut and screw the pushrod in or out with pliers until the standard pedal height from the floor is reached. After adjustment, tighten the locknut firmly.

   NOTE: Do not adjust the pedal height with the pushrod depressed.

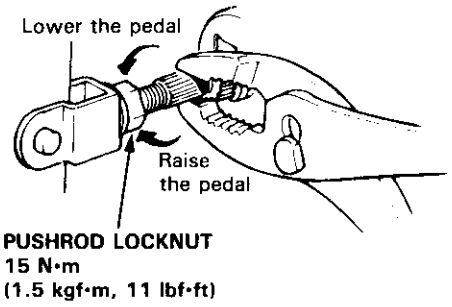

4. Screw in the brake switch until its plunger is fully depressed (threaded end touching the pad on the pedal arm). Then back off the switch 1/4 turn to make 0.3 mm (0.01 in) of clearance between the threaded end and pad. Tighten the locknut firmly. Connect the brake switch connector.

   CAUTION: Make sure that the brake lights go off when the pedal is released.

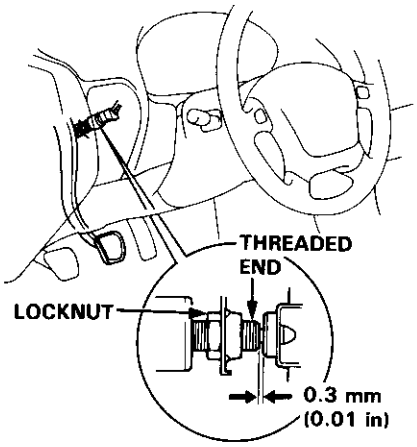

5. Check the brake pedal free play as described below.

Pedal Free Play

1. Stop the engine and inspect the play on the pedal pad by pushing the pedal by hand.

   Free Play: 1–5 mm (1/16–13/64 in)

2. If the pedal free play is out of specification, adjust the brake switch.

   CAUTION: If the pedal free play is insufficient, it may result in brake drag.

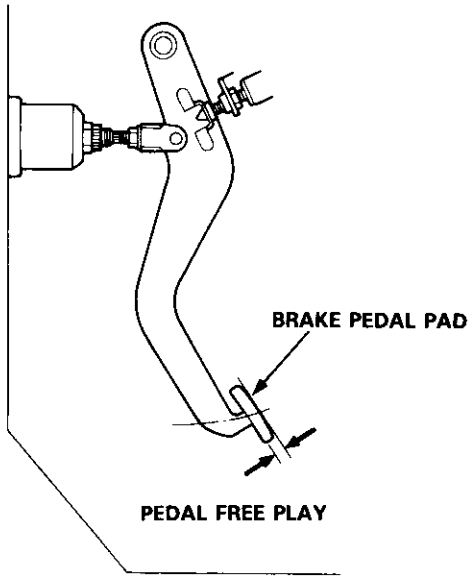

Parking Brake

Inspection

1. Pull the parking brake lever with 200 N (20 kgf, 44 lbf) force to fully applied the parking brake. The parking brake lever should be locked within the specified notches.

   Lever Locked Notches: 6—10

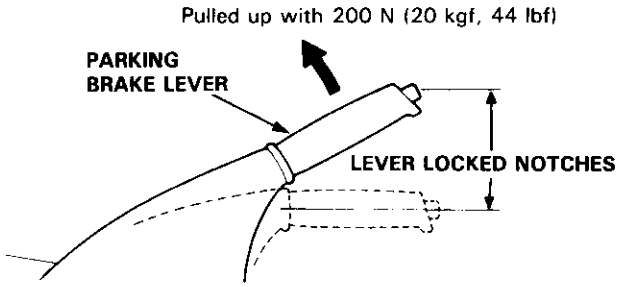

2. Adjust the parking brake if the lever notches are out of specification.

Adjustment

NOTE: After rear brake caliper servicing, loosen the parking brake adjusting nut, start the engine and depress the brake pedal several times to set the self-adjusting brake before adjusting the parking brake.

1. Raise the rear wheels off the ground and support on safety stands.

   ⚠ WARNING Block the front wheels before jacking up the rear of the car.

2. Make sure the parking brake arm on the rear brake caliper contacts the brake caliper pin.

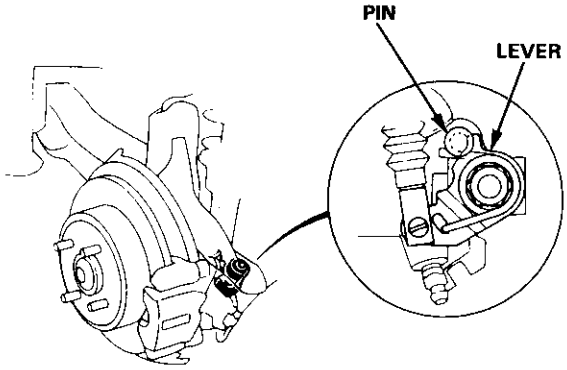

3. Pull the parking brake lever up on notch.

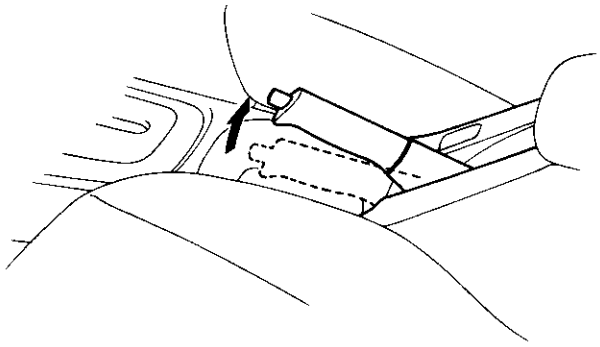

4. Remove the rear console (see section 20).

5. Tighten the adjusting nut until the rear wheels drag slightly when turned.

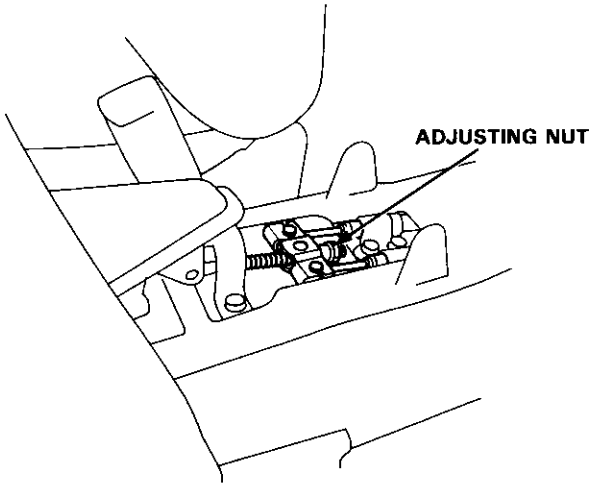

6. Release the parking brake lever fully, and check that the rear wheels do not drag when turned. Readjust if necessary.

7. Make sure that the parking brakes are fully applied with the parking brake lever is pulled up fully.

8. Install the cap onto the parking brake cable end, and reinstall the rear console.

Bleeding

CAUTION:
- **Use only clean DOT 3 or 4 brake fluid.**
- **Make sure no dirt or other foreign matter is allowed to contaminate the brake fluid.**
- **Do not mix different brands of brake fluid as they may not be compatible.**
- **Do not spill brake fluid on the car, it may damage the paint; if brake fluid does contact the paint, wash it off immediately with water.**

NOTE: The reservoir on the master cylinder must be at the MAX (upper) level mark at the start of bleeding procedure, and checked after bleeding each brake caliper. Add fluid as required. Use only clean DOT 3 or 4 brake fluid.

1. Make sure the brake fluid level in the reservoir is at the MAX (upper) level line.

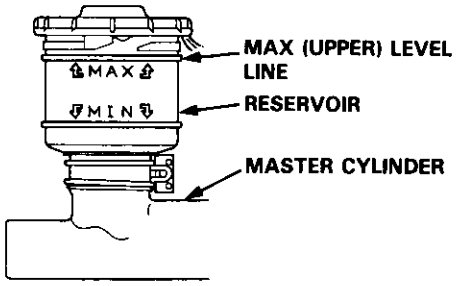

2. Have someone slowly pump the brake pedal several times, then apply steady pressure.

3. Loosen the brake bleed screw to allow air to escape from the system. Then tighten the bleed screw securely.

4. Repeat the procedure for each wheel in the sequence shown below, until air bubbles no longer appear in the fluid.

5. Refill the reservoir of master cylinder to the MAX (upper) level line.

<BLEEDING SEQUENCE:>

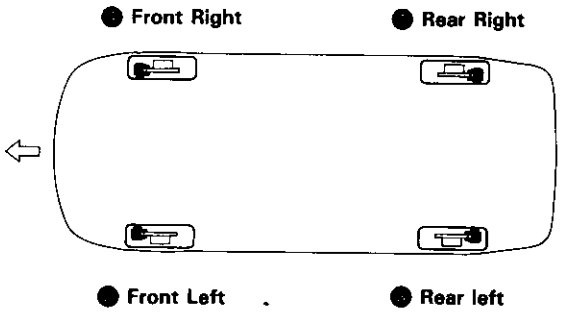

<FRONT:>

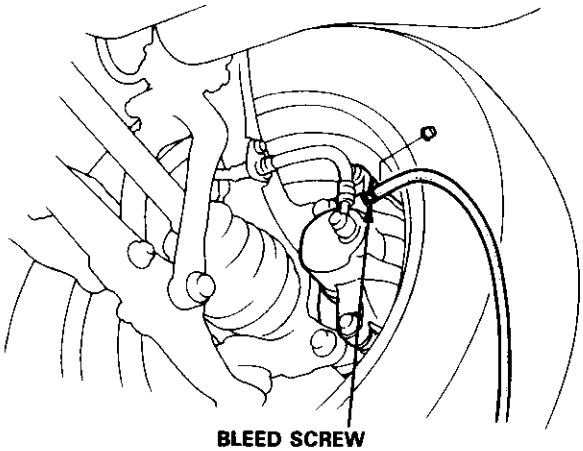

<REAR:>

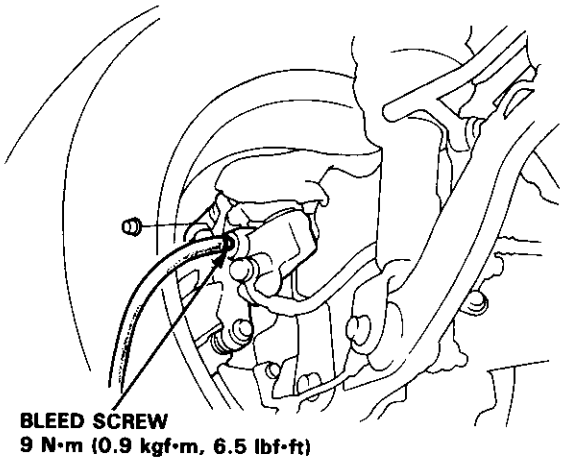

Front Brake Pads

Inspection and Replacement

⚠ WARNING

- **Never use and air hose or dry brush to clean brake assembiles.**
- **Use an OSHA-approved vacuum cleaner to avoid breathing brake dust.**

1. Loosen the front wheel nuts slightly, then raise the car and support on safety stands.

2. Remove the caliper bolt, and pivot the caliper up out of the way.

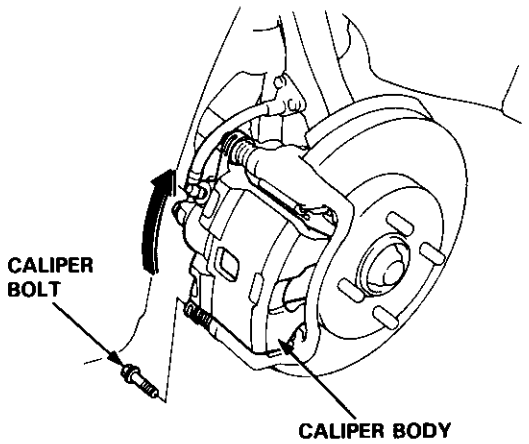

NOTE: Check the hoses and pin boots for damage or deterioration.

3. Remove the pad shim, pad retainers and pads.

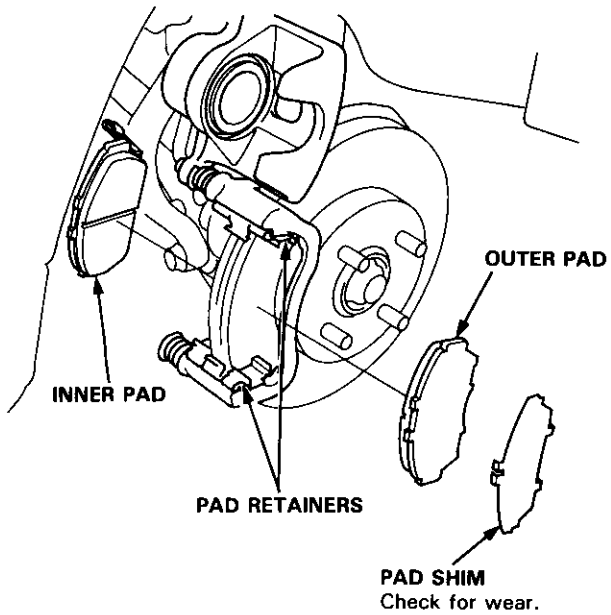

4. Using vernier calipers, measure the thickness of each brake pad lining.

Brake Pad Thickness:
Standard: 9.5–10.5 mm (0.37–0.41 in)
Service Limit: 1.6 mm (0.06 in)

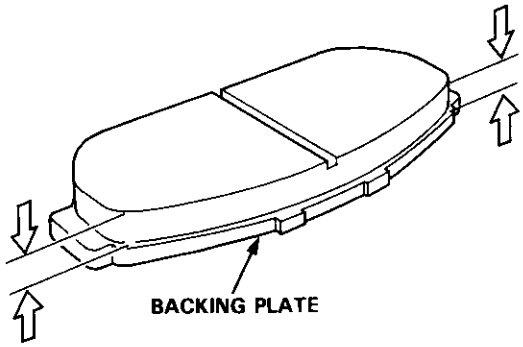

NOTE: Measurement does not include pad backing plate thickness.

5. If the brake pad thickness is less than service limit, replace the front pads as a set.

6. Clean the caliper thoroughly; remove any rust, and check for grooves or cracks.

7. Check the brake disc for damage or cracks.

8. Install the pad retainers.

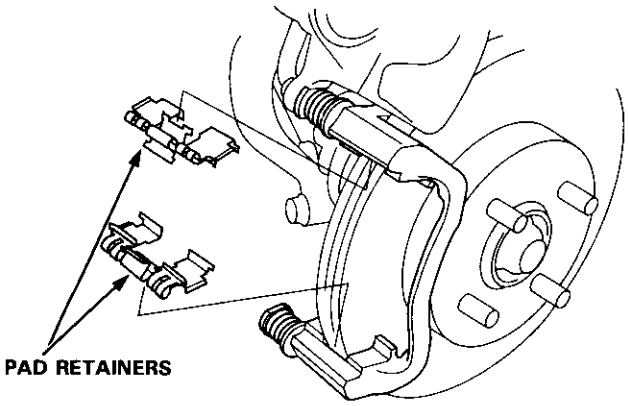

Inspection and Replacement (cont'd)

9. Apply Molykote® M77 grease to the inner side of the pad shim and the back of the pads. Wipe excess grease off the shim.

10. Install the brake pads and pad shim correctly.

⚠ WARNING

- **When reusing the pads, always reinstall the brake pads in their original positions to prevent loss of braking efficiency.**
- **Contaminated brake discs or pads reduce stopping ability. Keep grease off the discs and pads.**

NOTE: Install the pad with the wear indicator on the inside.

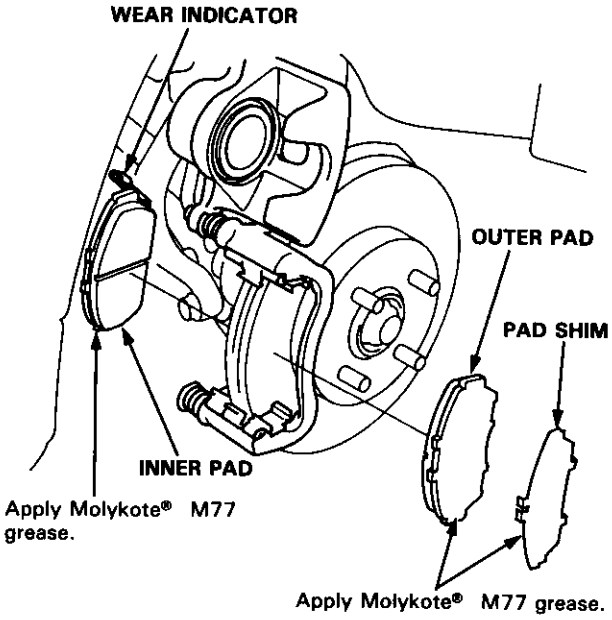

11. Push in the piston so that the caliper will fit over the pads. Make sure that the piston boot is in position to prevent damaging it when pivoting the caliper down.

12. Pivot the caliper down into position, then install caliper bolt and tighten it.

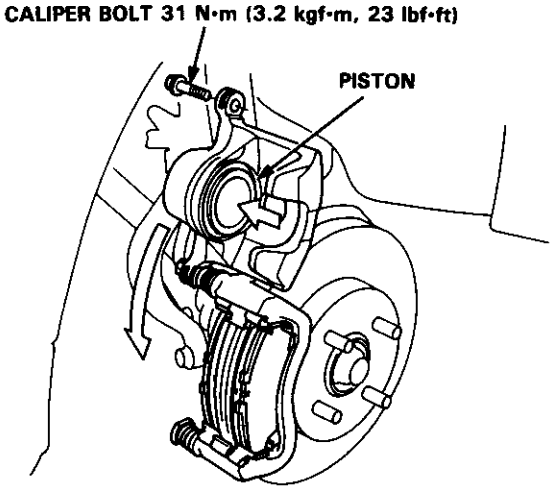

13. Depress the brake pedal several times to make sure the brakes work, then road-test.

    NOTE: Engagement of the brake may require a greater pedal stroke immediately after the brake pads have been replaced as a set. Several applications of the brake pedal will restore the normal pedal stroke.

14. After installation, check for leaks at hose and line joints or connections, and retighten if necessary.

Front Brake Disc

Disc Runout Inspection

1. Loosen the front wheel nuts slightly, then raise the car and support on safety stands. Remove the front wheels.

2. Remove the brake pads (see page 19-7).

3. Inspect the disc surface for damage or cracks. Clean the disc thoroughly and remove all rust.

4. Use wheel nuts and suitable plain washers to hold the disc securely against the hub, then mount a dial indicator as shown, and measure the runout at 10 mm (0.4 in) from the out edge of the disc.

   Brake Disc Runout:
   Service Limit: 0.10 mm (0.004 in)

5. If the disc is beyond the service limit, refinish the brake disc with an on-car brake lathe. The Kwik-Lathe produced by Kwik-way manufacturing Co. and the "Front Brake Disc Lathe" offered by Snap-on Tools Co. are approved for this operation.

   Max. Refinish Limit: 19.0 mm (0.75 in)

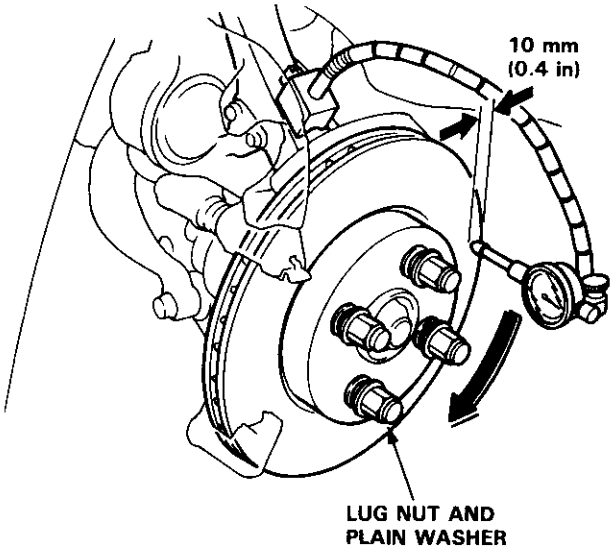

NOTE: A new disc should be refinished if its runout is greater than 0.10 mm (0.004 in)

Disc Thickness and Parallelism Inspection

1. Loosen the front wheel nuts slightly, then raise the car and support on safety stands. Remove the front wheels.

2. Remove the brake pads (see page 19-7).

3. Using a micrometer, measure disc tickness at eight points, approximately 45° apart and 10 mm (0.4 in) in from the outer edge of the disc.

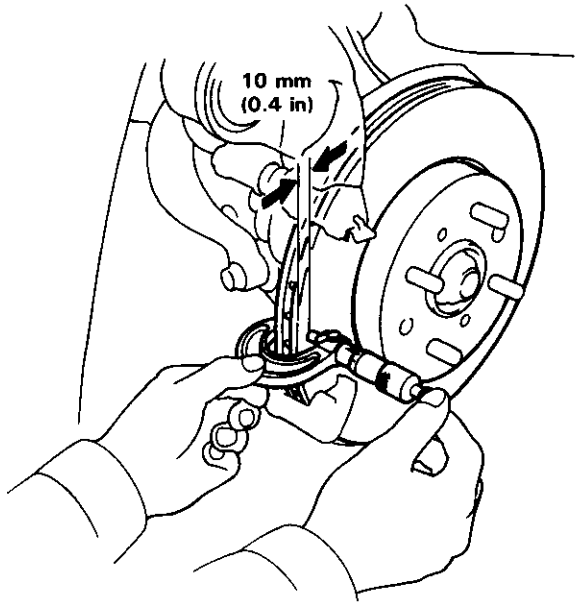

Brake Disc Thickness:
Standard: 20.9–21.1 mm (0.82–0.83 in)
Max. Refinishing Limit: 19.0 mm (0.75 in)

NOTE: Replace the brake disc if the smallest measurement is less than the max. refinishing limit.

Brake Disc Parallelism: 0.015 mm (0.0006 in) max.

NOTE: This is the maximum allowable difference between the thickness measurements.

4. If the disc is beyond the service limit for parallelism, refinish the brake disc with an on-car brake lathe. The Kwik-Lathe produced by Kwik-Way Manufacturing Co. and the "Front Brake Disc Lathe" offered by Snap-on Tools Co. are approved for this operation.

   NOTE: See page 18-10 for brake disc replacement.

Front Brake Caliper

Disassembly

⚠ WARNING

- **Never use an air hose or dry brush to clean brake assemblies.**
- **Use an OSHA-approved vacuum cleaner to avoid breathing brake dust.**

CAUTION:

- **Do not spill brake fluid on the car; it may damage the paint; if brake fluid does contact the paint, wash it off immediately with water.**
- **To prevent spills, cover the hose joints with rags or shop towels.**
- **Clean all parts in brake fluid and air dry; blow out all passages with compressed air.**

1. Remove the banjo bolt and disconnect the brake hose from the caliper.

2. Remove the caliper bolts, then remove the caliper from the bracket.

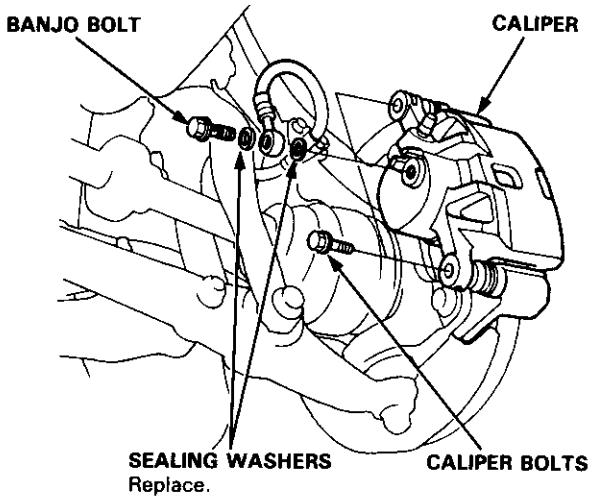

3. Remove the pins and pin boots from the caliper bracket.

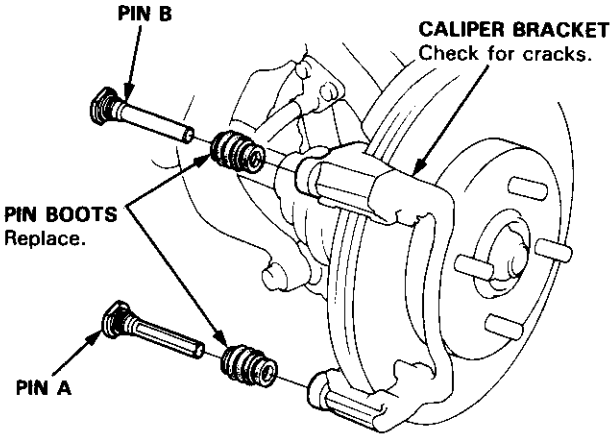

4. If necessary, apply compressed air to the caliper fluid inlet to get the piston out. Place a shop rag or wooden block as shown to cushion the piston when it is expelled. Use low pressure air in short spurts.

⚠ WARNING

- **Do not place your fingers in front of the piston.**
- **Do not use high air pressure; use an OSHA-approved 30 PSI nozzle.**

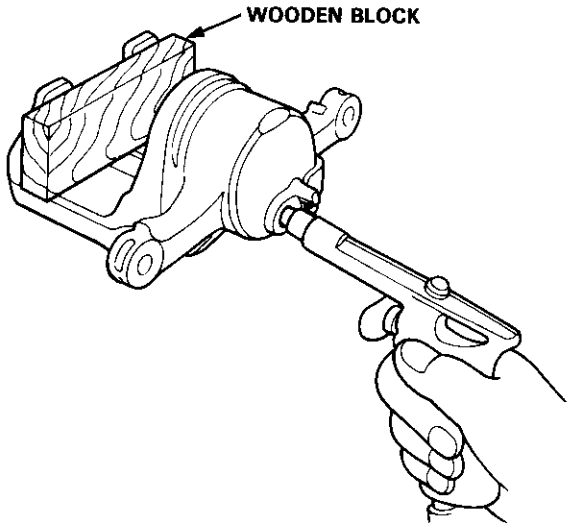

5. Remove the piston from the caliper, and check the piston for scoring on surface.

6. Remove the piston boot and piston seal.

CAUTION: Take care not to damage the cylinder bore.

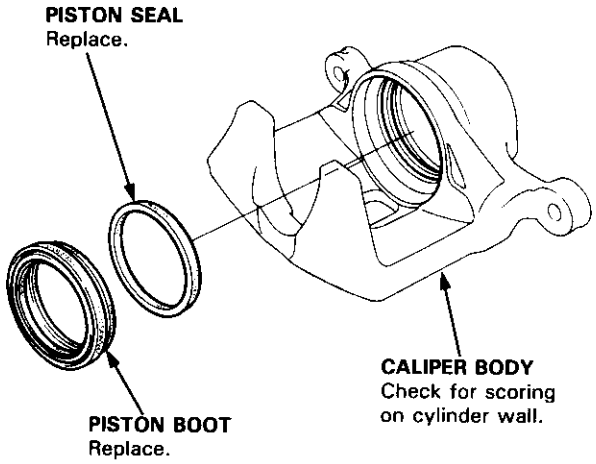

Reassembly

⚠ WARNING

- **Never use an air hose or dry brush to clean brake assemblies.**
- **Use an OSHA-approved vacuum cleaner to avoid breathing brake dust.**
- **Contaminated brake discs or pads reduce stopping ability.**
- **When reusing the pads, always reinstall the brake pads in their original positions to prevent loss of braking efficiency.**

CAUTION:

- **Do not spill brake fluid on the car; it may damage the paint; if brake fluid does contact the paint, wash it off immediately with water.**
- **Clean all parts in brake fluid and air dry; blow out all passages with compressed air.**
- **Before reassembling, check that all parts are free of dust and other foreign particles.**
- ***Replace parts with new ones whenever specified to do so.***
- **Make sure no dirt or other foreign matter is allowed to contaminate the brake fluid.**
- **Do not mix different brands of brake fluid as they may not be compatible.**
- ***Do not reuse the drained fluid. Use only clean DOT 3 or 4 brake fluid.***

NOTE:

- Coat piston, piston seal, and caliper bore with clean brake fluid.
- Replace all rubber parts with new ones whenever disassembled.

GREASE : Brake cylinder grease (P/N: 08733—B020E) or equivalent rubber grease.

GREASE : Use recommended grease in the caliper seal set.

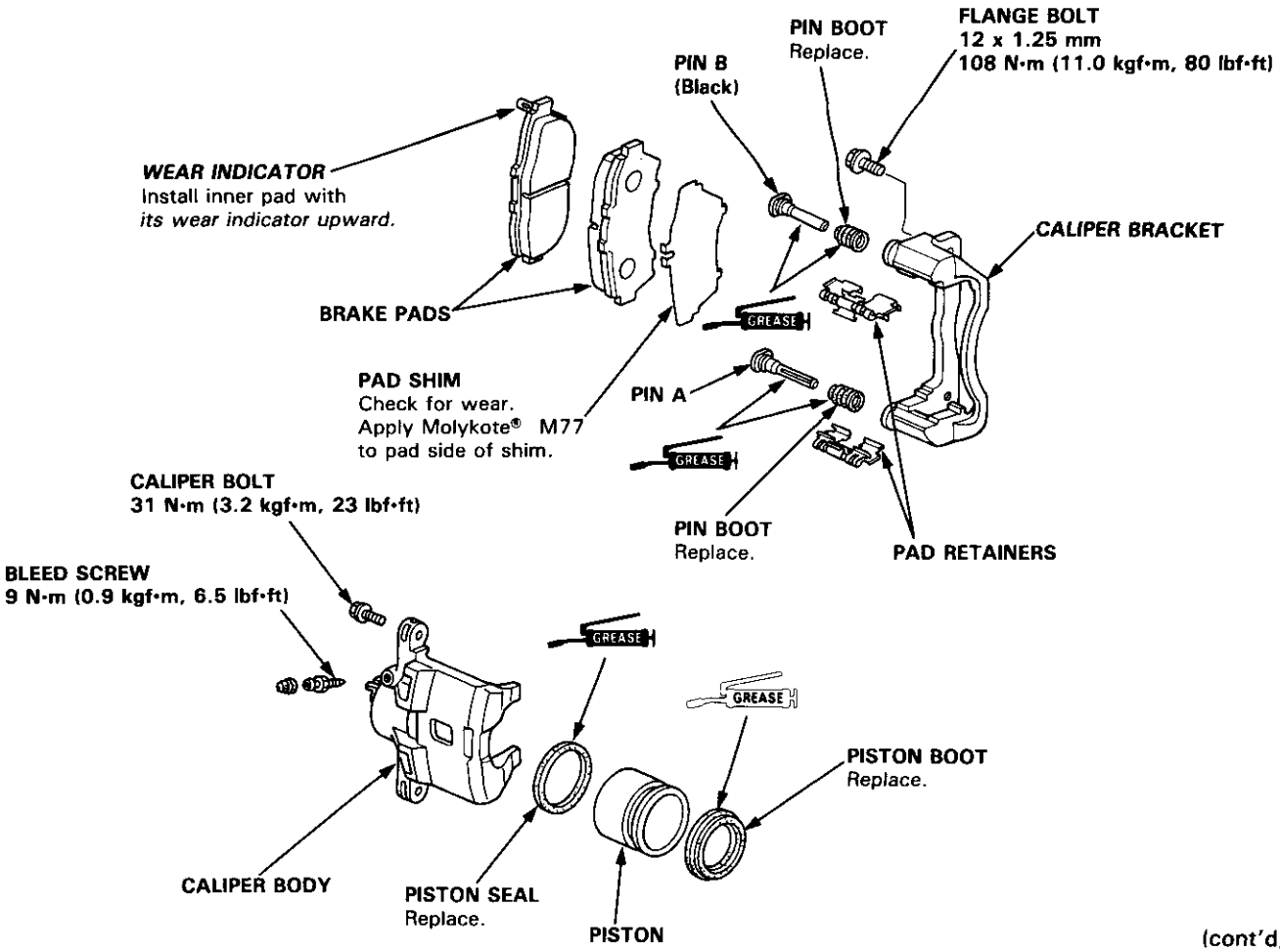

(cont'd)

Reassembly (cont'd)

1. Clean the piston and caliper bore with brake fluid and inspect for wear or damage.

2. Coat a new piston seal with the recommended grease in the caliper seal set, and install the seal in the cylinder groove.

3. Apply brake cylinder grease (P/N: 08733—B020E) or equivalent rubber grease to the sealing lips and inside of a new piston boot, and install the boot in the cylinder groove.

   CAUTION: Be careful not to damage the caliper cylinder wall.

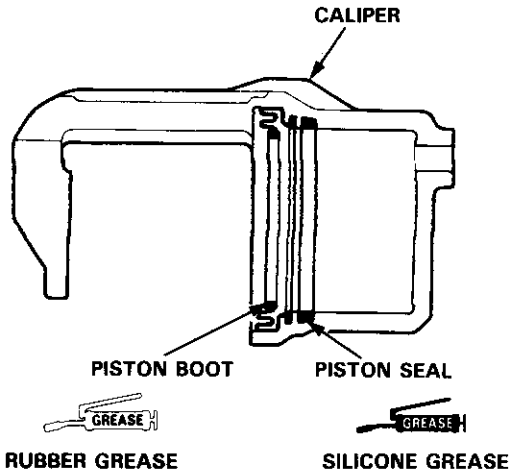

4. Lubricate the caliper cylinder and piston with brake fluid, then install the piston in the cylinder with the dished end facing in.

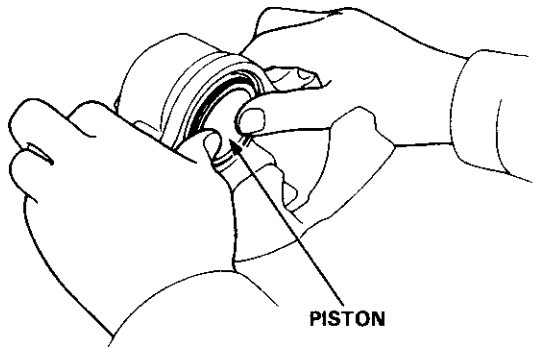

5. Apply the recommended grease in the caliper seal set to sliding surface of the pins and inside of the new pin boots.

6. Install the pin boots into the groove in the caliper bracket properly.

7. Insert the pin A and pin B into the caliper bracket.

8. Install the pin boots into the groove in pins properly.

9. Install the brake pads in their original positions (see page 19-8).

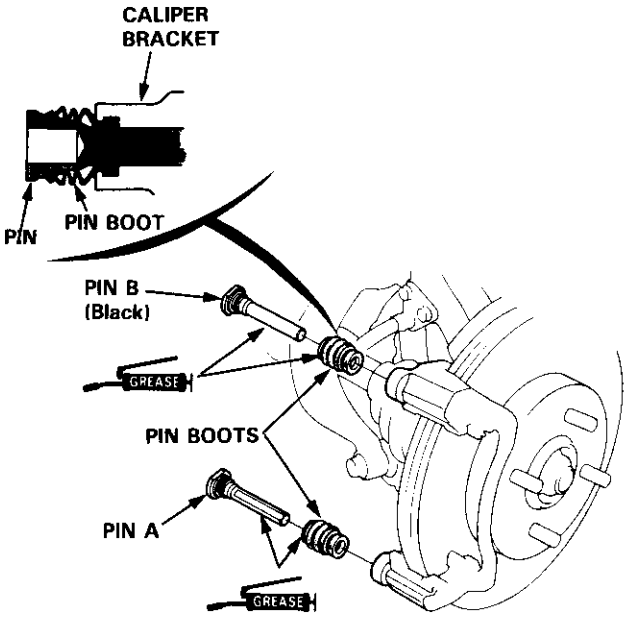

10. Connect the brake hose to the caliper with new sealing washers, and tighten the banjo bolt.

11. Tighten the caliper bolts.

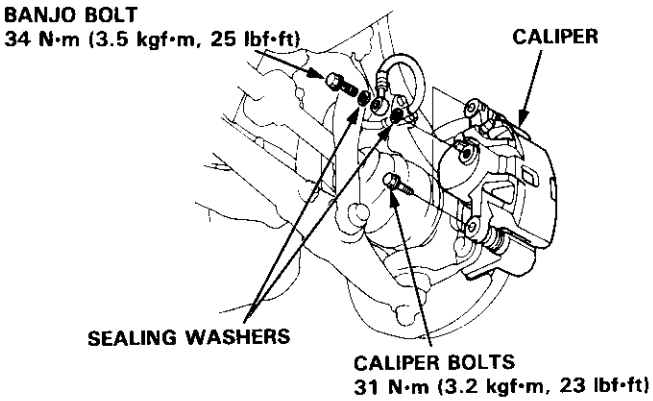

12. Fill the brake reservoir and bleed the brake system (see page 19-6).

13. After installation, check for leaks at hose and line joints or connections, and retighten if necessary.

Master Cylinder

Removal

CAUTION:
- **Be careful not to bend or damage the brake pipes when removing the master cylinder.**
- **Do not spill brake fluid on the car; it may damage the paint; if brake fluid does contact the paint, wash it off immediately with water.**
- **To prevent spills, cover the hose joints with rags or shop towels.**

1. Disconnect the brake fluid level switch connectors.
2. Remove the reservoir cap from the master cylinder.
3. The brake fluid may be sucked out through the top of the master cylinder reservoir.
4. Disconnect the brake pipes from the master cylinder.
5. Remove the master cylinder mounting nuts and the master cylinder from the brake booster.

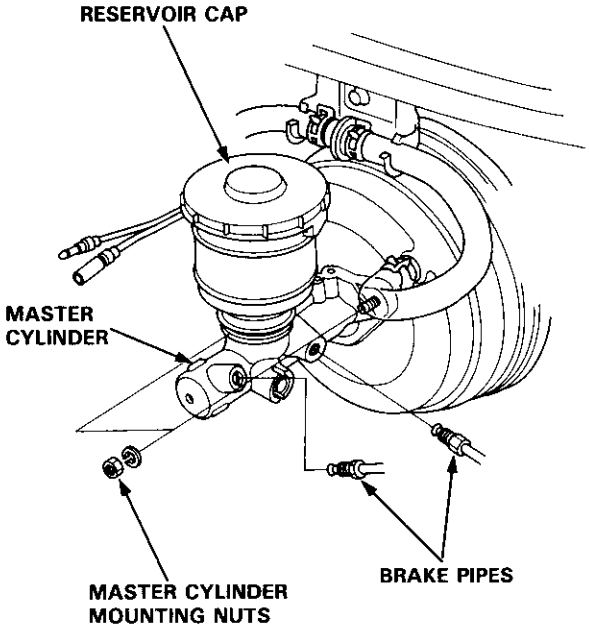

Inspection/Disassembly

CAUTION:
- **Do not spill brake fluid on the car; it may damage the paint; if brake fluid does contact the paint, wash it off immediately with water.**
- **Before reassembling, check that all parts are free of dust and other foreign particles.**
- **Do not try to disassemble the master cylinder assembly. Replace the master cylinder assembly with a new part if necessary.**
- **Make sure no dirt or other foreign matter is allowed to contaminate the brake fluid.**

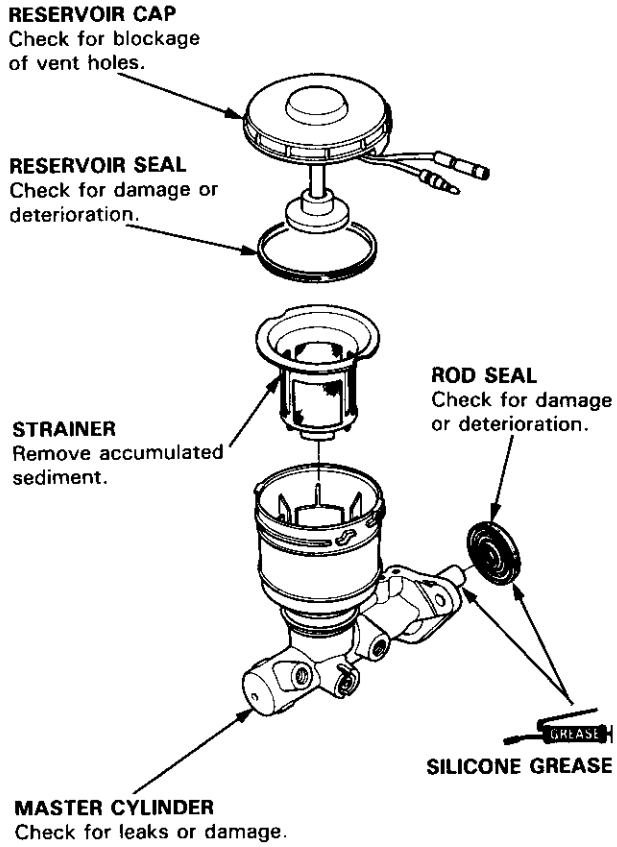

Master Cylinder

Pushrod Clearance Adjustment

NOTE: Master cylinder pushrod-to piston clearance must be checked and adjustments made, if necessary, before installing master cylinder.

1. Set the special tool on the master cylinder body; push in the center shaft until the top of it contacts the end of the secondary piston by turning the adjusting nut.

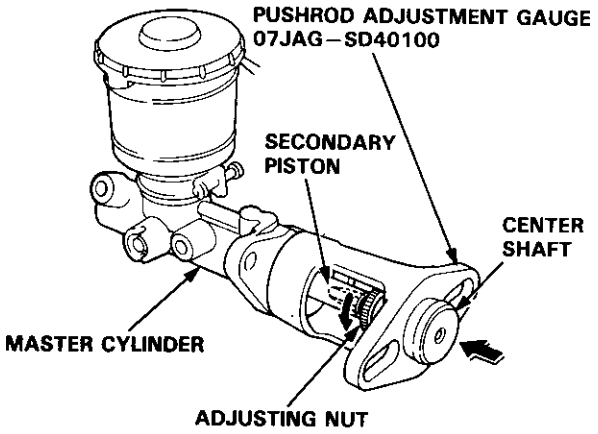

2. Without disturbing the center shaft's position, install the special tool upside down on the booster.

3. Install the master cylinder nuts and tighten to the specified torque.

4. Connect the booster in-line with a vacuum gauge 0–101 kPa (0–760 mmHg, 30 in Hg) to the booster's engine vacuum supply, and maintain a engine speed that will deliver 66 kPa (500 mmHg, 20 in Hg) vacuum.

5. With a feeler gauge, measure the clearance between the gauge body and the adjusting nut as shown.

   Clearance: 0–0.4 mm (0–0.02 in)

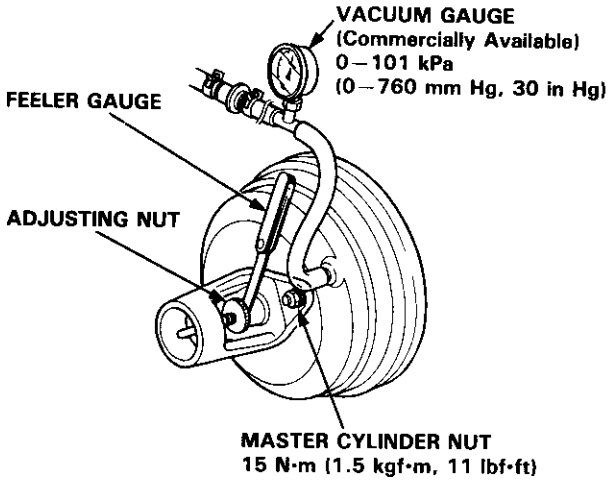

NOTE: If the clearance between the gauge body and adjusting nut is 0.4 mm (0.02 in), the pushrod-to-piston clearance is 0 mm. However, if the clearance between the gauge body and adjusting nut is 0 mm, the pushrod-to-piston clearance is 0.4 mm (0.02 in) or more. Therefore, it must be adjusted and rechecked.

6. If clearance is incorrect, loosen the star locknut and turn the adjuster in or out to adjust.

   NOTE:
   - Adjust the clearance while the specified vacuum is applied to the booster.
   - Hold the clevis while adjusting.

7. Tighten the star locknut securely.

8. Remove the special tool.

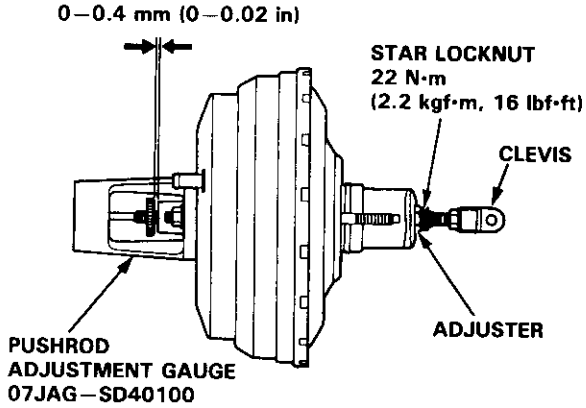

9. Adjust the pushrod length as shown if the booster is removed.

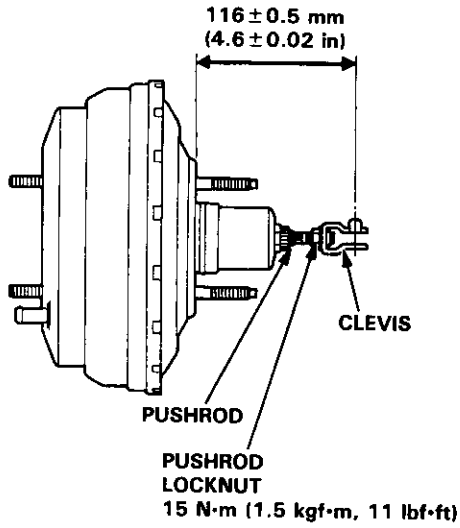

10. Install the master cylinder (see page 19-15).

Installation

CAUTION:
- **When connecting the brake pipes, make sure that there is no interference between the brake pipes and other parts.**
- **Be careful not to bend or damage the brake pipes when installing the master cylinder.**

NOTE: If replacing the master cylinder or brake booster, check and adjust the pushrod clearance before installing the master cylinder. (see page 19-14).

1. Install the master cylinder on the brake booster with the mounting nuts.
2. Connect the brake pipes to the master cylinder.
3. Fill the master cylinder reservoir and bleed the brake system (see page 19-6).
4. Install the reservoir cap, and connect the brake fluid level switch connectors.

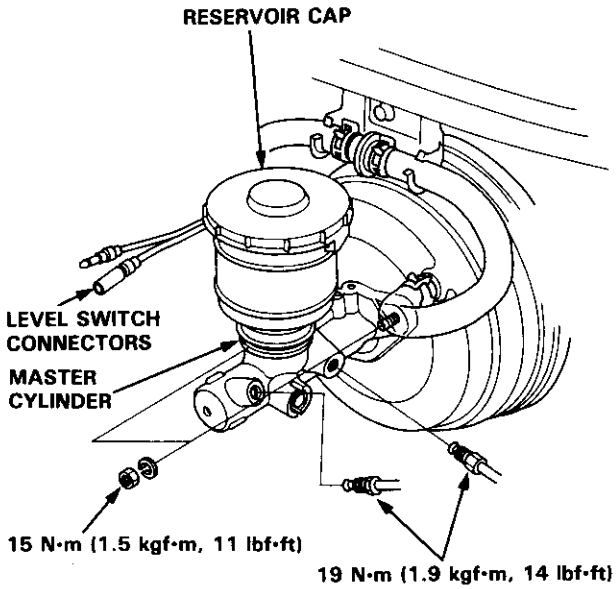

5. After installation, perform the following inspections and adjust if necessary.
   - Brake pedal height (see page 19-4)
   - Brake pedal free play (see page 19-4)

Inspection

Functional Test
1. With the engine stopped, depress the brake pedal several times, then depress the pedal hard and hold that pressure for 15 seconds. If the pedal sinks, the master cylinder, brake line or a brake caliper is faulty.
2. Start the engine with the pedal depressed. If the pedal sinks slightly, the vacuum booster is working. If the pedal height does not vary, the booster or check valve is faulty.

Leak Test
1. Depress the brake pedal with the engine running, then stop the engine. If the pedal height does not vary while depressed for 30 seconds, the vacuum booster is OK. If the pedal rises, the booster is faulty.

   CAUTION: Do not try to disassemble the booster. Replace the booster assembly with a new one.
2. With the engine stopped, depress the brake pedal several times using normal pressure. When the pedal is first depressed, it should be low. On consecutive applications, pedal height should gradually rise. If the pedal position does not vary, check the booster check valve.

Check Valve Test
1. Disconnect the brake booster vacuum hose at the booster.
2. Start the engine and let it idle. There should be vacuum available. If no vacuum is available, the check valve is not working correctly.
   Replace the check valve and retest.

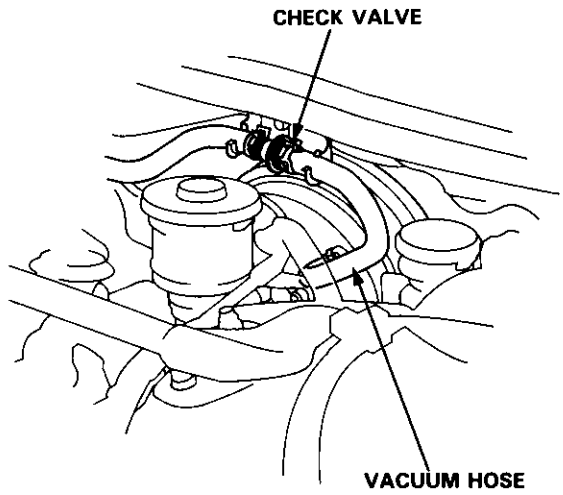

Brake Booster

Replacement

1. Remove the master cylinder (see page 19-13).

2. Disconnect the vacuum hose from the brake booster.

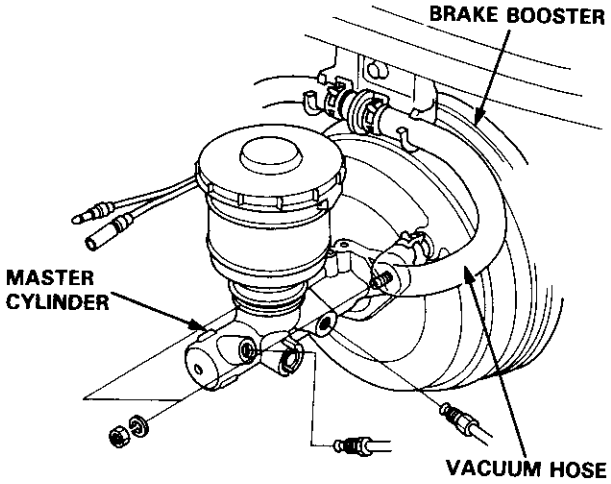

3. Remove the cotter pin and the joint-pin.

4. Remove the brake booster mounting nuts.

5. Remove the brake booster.

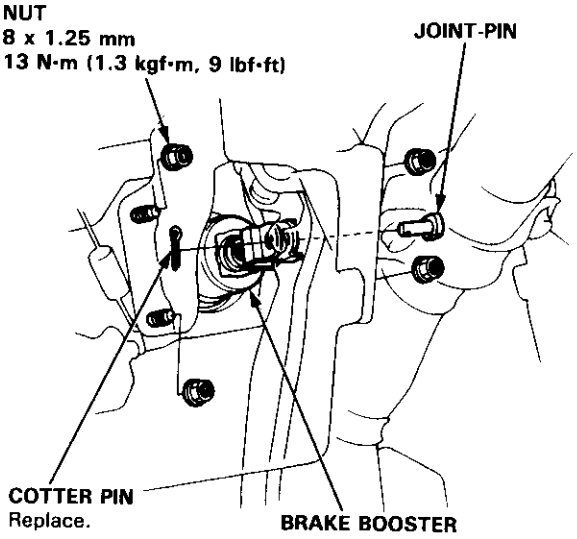

NOTE: Adjust the pushrod length before installing the booster (see page 19-14).

6. Install the brake booster in the reverse order of removal.

7. Install the master cylinder (see page 19-15).

8. After installation, perform the following inspections and adjust if necessary.

   - Brake pedal height (see page 19-4)
   - Brake pedal free play (see page 19-4)

Rear Brake Pads

Inspection and Replacement

⚠ WARNING

- **Never use an air hose or dry brush to clean brake assemblies.**
- **Use an OSHA-approved vacuum cleaner to avoid breathing brake dust.**

1. Block the front wheels, loosen the rear wheel nuts slightly, support the rear of car on safety stands, then remove the rear wheels.
   Release the parking brake.

2. Remove the caliper shield.

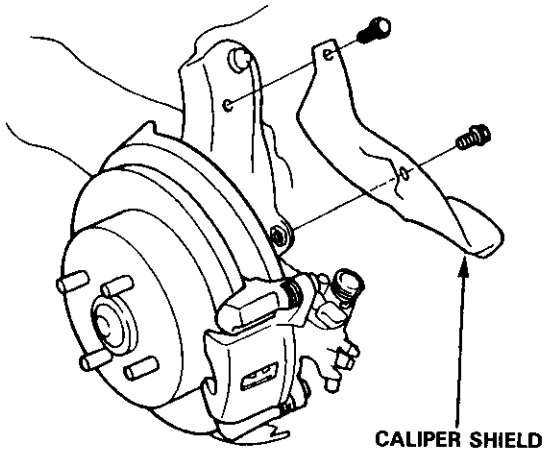

3. Remove the two caliper mounting bolts and the caliper from the bracket.

CAUTION:

- **Thoroughly clean the outside of the caliper to prevent dust and dirt from entering inside.**
- **Support the caliper with a piece of wire so that it does not hang from the brake hose.**

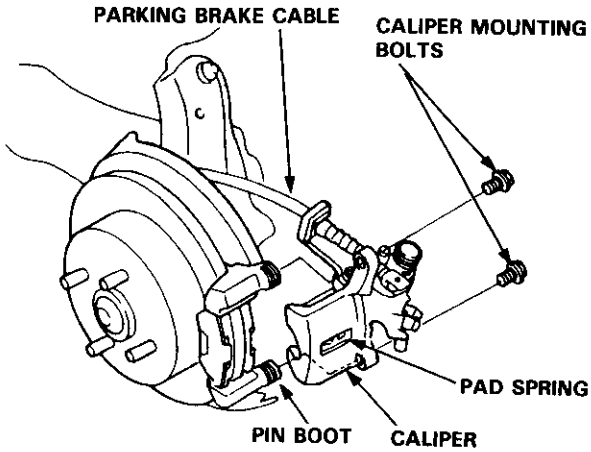

NOTE: Check the hoses and pin boots for damage or deterioration.

4. Remove the outer pad shim, pads and pad retainer.

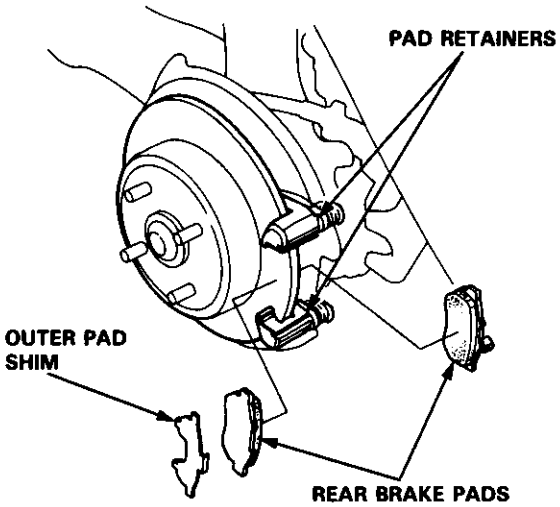

5. Using vernier calipers, measure the thickness of each brake pad lining.

Brake Pad Thickness:
Standard: 7.0–8.0 mm (0.27–0.31 in)
Service Limit: 1.6 mm (0.06 in)

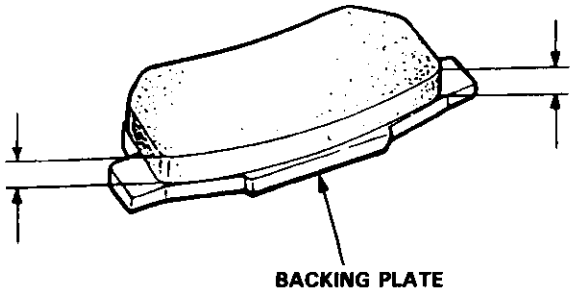

NOTE: Measurement does not include pad backing plate thickness.

6. Clean the caliper thoroughly; remove any rust, and check for grooves or cracks.

7. Check the brake disc for damage or cracks.

8. Make sure that the pad retainers are installed in the correct positions.

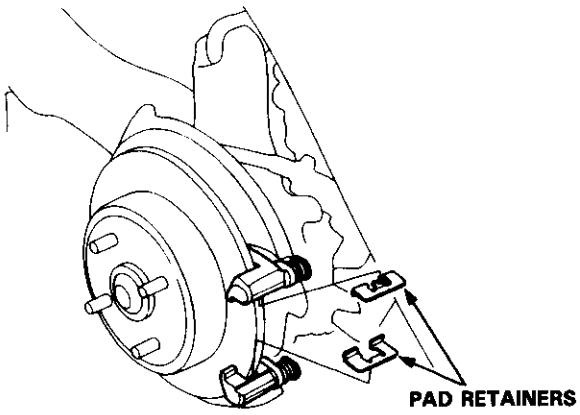

9 Apply Molykote® M77 to the pad side of the shims. Wipe excess grease off the shims.

10. Install the brake pads and outer pad shim on caliper bracket.

⚠ WARNING

- **When reusing the pads, always reinstall the brake pads in their original positions to prevent loss of braking efficiency.**
- **Contaminated brake discs or pads reduce stopping ability. Keep grease off the discs and pads.**

NOTE: Install the inner pad with its wear indicator facing downward.

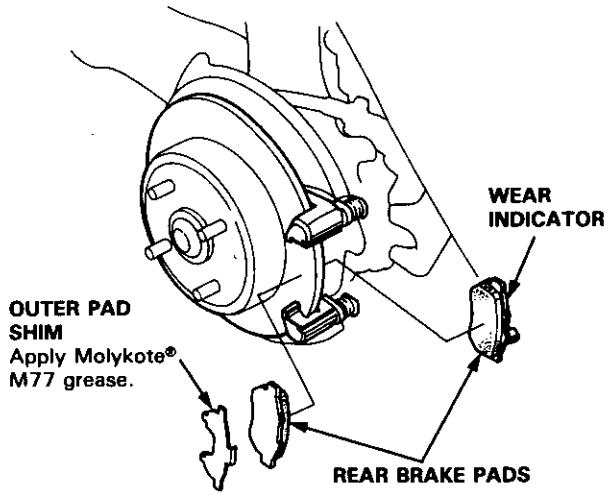

(cont'd)

Inspection and Replacement (cont'd)

11. Rotate the caliper piston clockwise into place in the cylinder, then align the cutout in the piston with the tab on the inner pad by turning the piston back.

    CAUTION: Lubricate the boot with rubber grease to avoid twisting the piston boot. If piston boot is twisted, back it out so it sits properly.

12. Install the brake caliper.

13. Install and tighten the caliper mounting bolts.

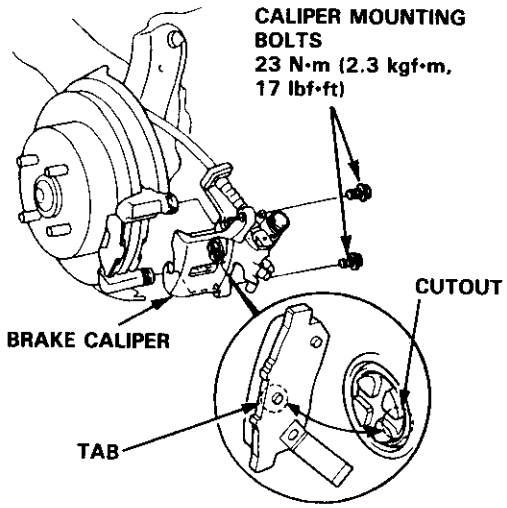

14. Install the caliper shield.

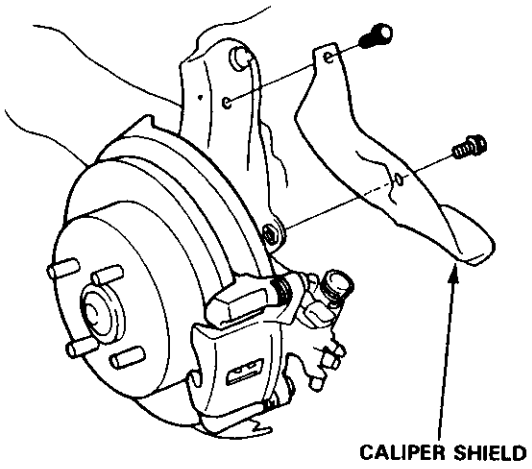

15. After installation, check for leaks at hose and line joints or connections, and retighten if necessary.

16. Depress the brake pedal several times to make sure the brakes work, then road-test.

    NOTE: Engagement of the brake may require a greater pedal stroke immediately after the brake pads have been replaced as a set. Several applications of the brake pedal will restore the normal pedal stroke.

Rear Brake Disc

Disc Runout Inspection

1. Loosen the rear wheel nuts slightly, then raise the car and support on safety stands. Remove the rear wheels.

2. Remove the brake pads (see page 19-16).

3. Inspect the disc surface for damage or cracks. Clean the disc thoroughly and remove all rust.

4. Use wheel nuts and suitable plain washers to hold the disc securely against the hub, then mount a dial indicator as shown, and measure the runout at 10 mm (0.4 in) from the outer edge of the disc.

   Brake Disc Runout:
   Service Limit: 0.10 mm (0.004 in) max.

5. If the disc is beyond the service limit, refinish the brake disc.

   Max. Refinishing Limit: 8.0 mm (0.32 in)

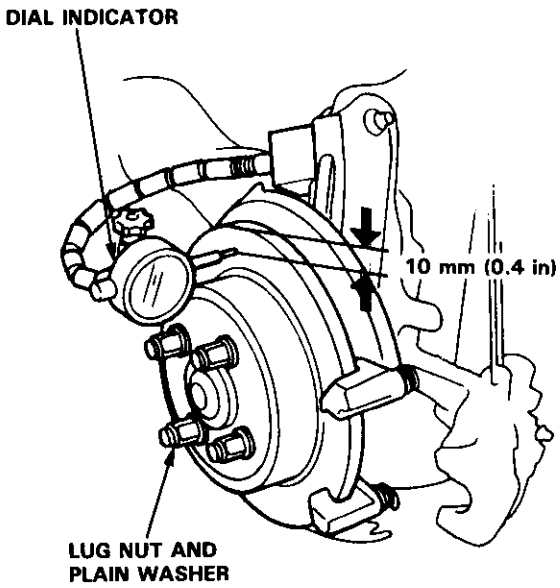

NOTE: A new disc should be refinished if its runout is greater than 0.10 mm (0.004 in).

Thickness and Parallelism Inspection

1. Loosen the rear wheel lug nuts slightly, then raise the car and support on safety stands. Remove the rear wheels.

2. Remove the brake pads (see page 19-16).

3. *Using a micrometer, measure disc thickness at eight* points, approximately 45° apart and 10 mm (0.4 in) in from the outer edge of the disc.

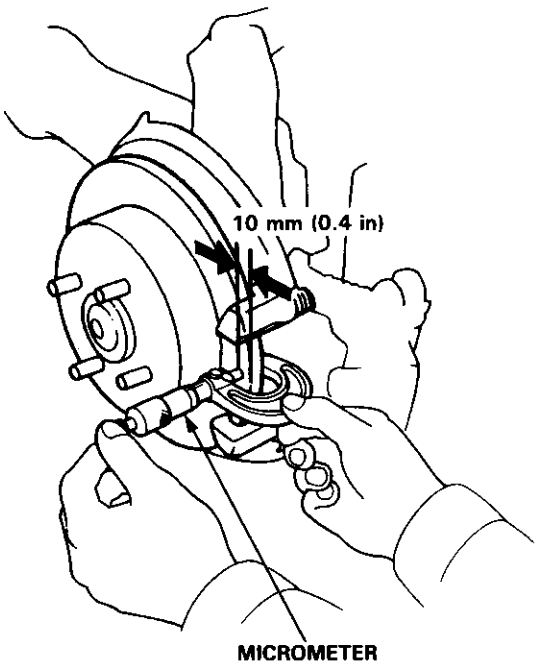

Brake Disc Thickness:
Standard: **8.9–9.1 mm (0.35–0.36 in)**
Max. Refinishing Limit: 8.0 mm (0.31 in)

NOTE: Replace the brake disc if the smallest measurement is less than the max. refinishing limit.

Brake Disc Parallelism: 0.015 mm (0.0006 in) max.

NOTE: This is the maximum allowable difference between the thickness measurement.

4. If the disc is beyond the service limit for parallelism, refinish the brake disc.

   NOTE: See page 18-29 for brake disc replacement.

Rear Brake Caliper

Disassembly

⚠ WARNING

- **Never use an air hose or dry brush to clean brake assemblies.**
- **Use an OSHA-approved vacuum cleaner to avoid breathing brake dust.**
- **Contaminated brake discs or pads reduce stopping ability.**

CAUTION:

- **Do not spill brake fluid on the car; it may damage the paint; if brake fluid does contact the paint, wash it off immediately with water.**
- **To prevent spills, cover the hose joints with rags or shop towels.**
- **Clean all parts in brake fluid and air dry; blow out all passages with compressed air.**

1. Remove the caliper shield (see page 19-16).

2. Remove the lock pin and clevis pin.
   Remove the cable clip, and disconnect the cable from the arm.

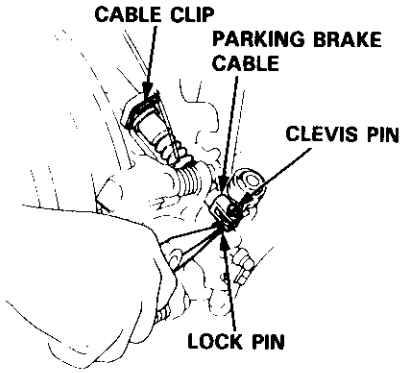

3. Remove the banjo bolt and two sealing washers.

4. Remove the two caliper mounting bolts and caliper body from the bracket.

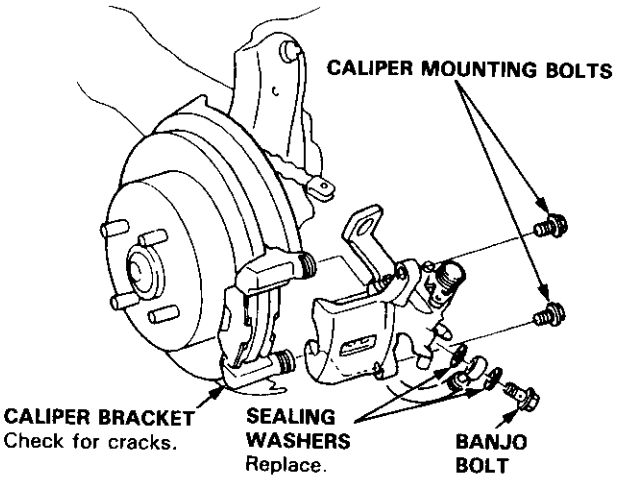

5. Remove the pins and pin boots from the caliper bracket.

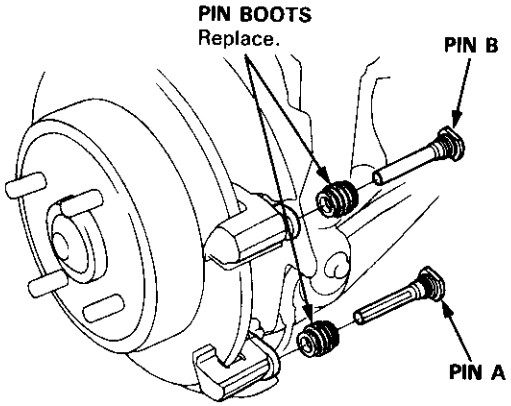

6. Remove the pad spring from the caliper body.

7. Remove the piston by rotating the piston counterclockwise with the special tool, and remove the piston boot.

   CAUTION: Avoid damaging the piston.

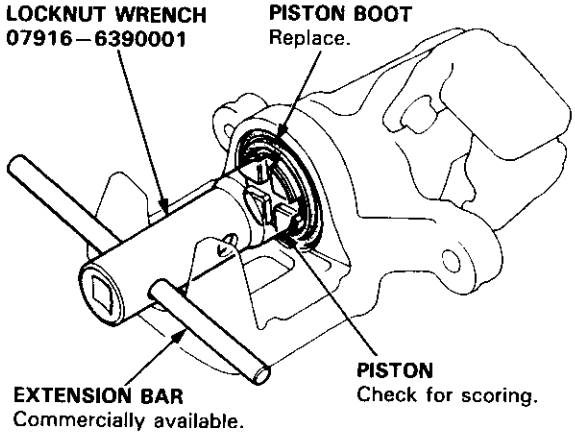

8. Remove the piston seal.

   CAUTION: Take care not to damage the cylinder bore.

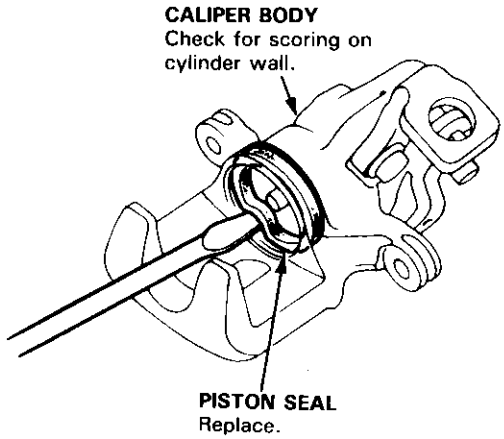

9. Install the special tool between the caliper body and spring cover, then position the locknuts as shown. Turn the shaft until the plate just contacts the caliper body.

CAUTION: Be careful not to damage the inside of the caliper cylinder during caliper disassembly.

NOTE: Do not compress the spring under the spring cover.

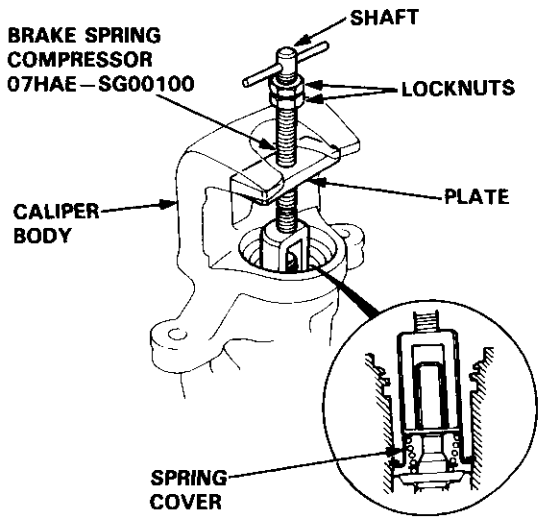

10. Turn the shaft clockwise 1/4 – 1/2 turn to compress the adjusting spring B in the caliper body.

CAUTION: To prevent damage to the inner components, do not turn the shaft more than 1/2 turn.

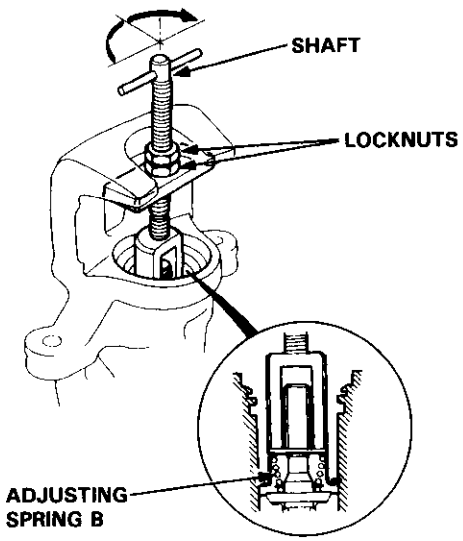

11. Lower the locknuts fully, and tighten the locknuts securely.

NOTE: Keep the locknuts in this position until you reinstall the circlip.

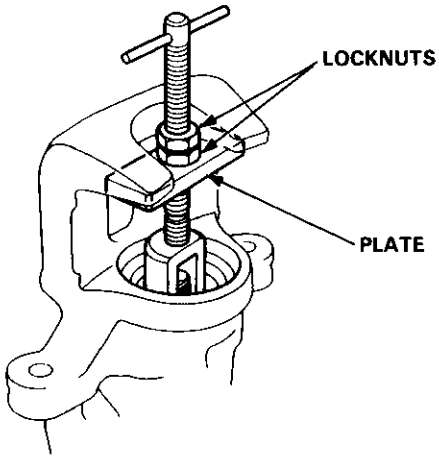

12. Remove the circlip with snap ring pliers.

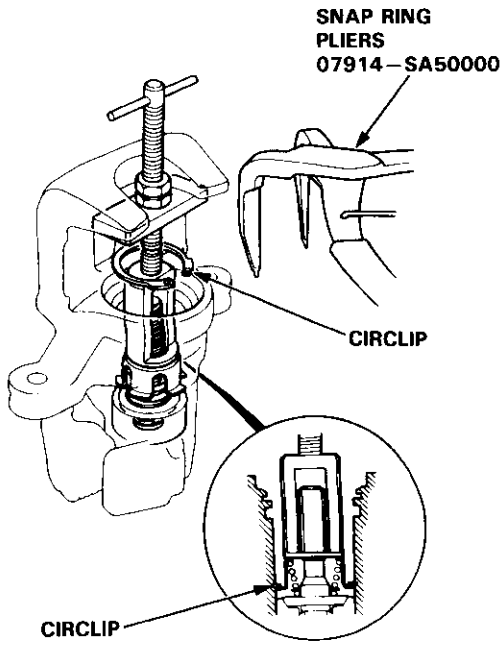

(cont'd)

Disassembly (cont'd)

13. Hold the plate with your fingers and turn the shaft counterclockwise. Remove the special tool from the caliper.

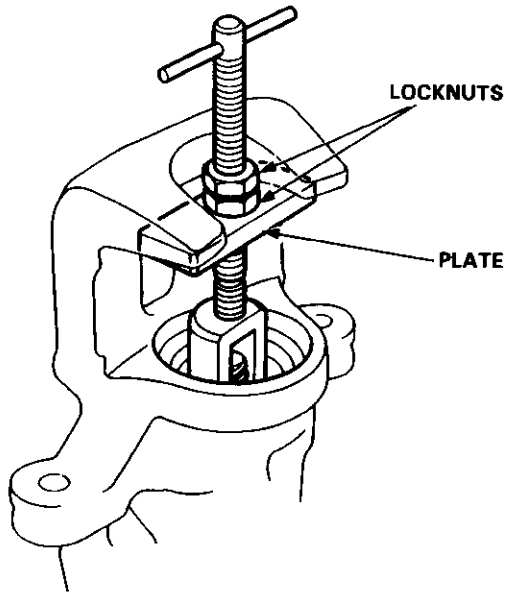

14. Remove the adjusting bolt.

15. Remove the spring cover, adjusting spring B, spacer, bearing A and cup from the adjusting bolt.

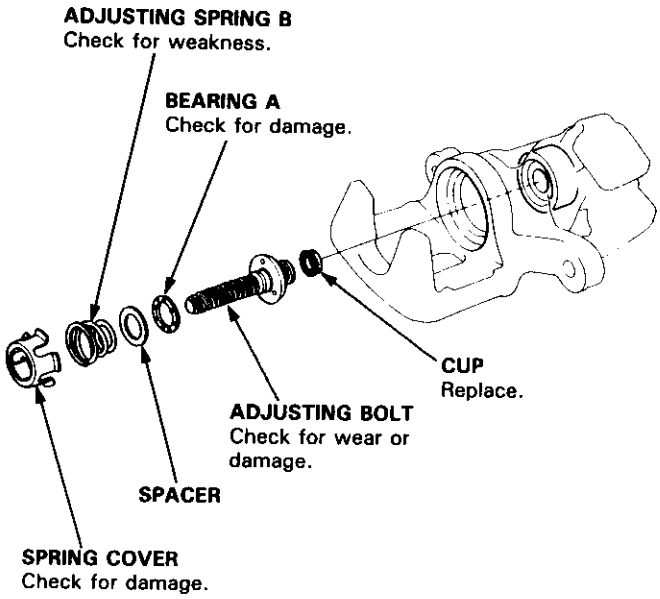

16. Remove the sleeve piston, and remove the pin from the cam.

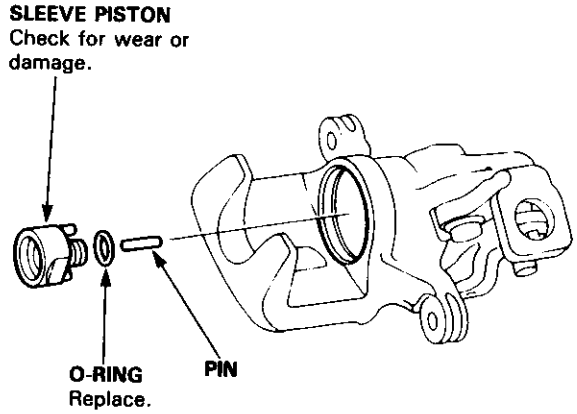

17. Remove the return spring.

18. Remove the parking lever and cam as an assembly from the caliper body.

CAUTION: Do not loosen the parking nut with the cam installed in the caliper body. If the lever and shaft must be separated, hold the lever in a vise and loosen the parking nut.

19. Remove the cam boot.

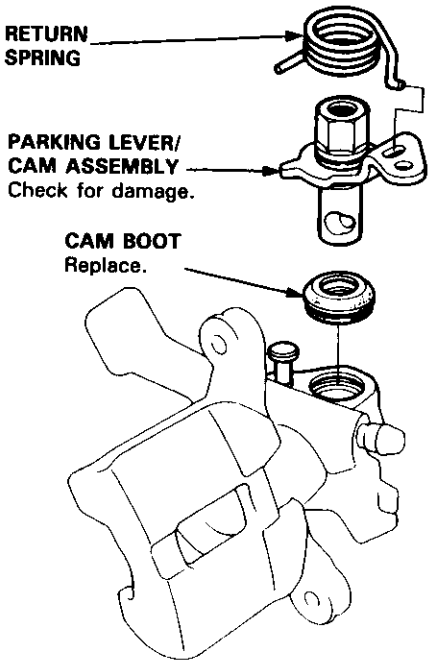

Reassembly

⚠ WARNING

- **Never use an air hose or dry brush to clean brake assemblies.**
- **Use an OSHA-approved vacuum cleaner to avoid breathing brake dust.**
- ***Contaminated brake discs or pads reduce stopping ability.***
- ***When reusing the pads, install them in their original positions to prevent loss of braking efficiency.***

CAUTION:

- **Do not spill brake fluid on the car; it may damage the paint; if brake fluid does contact the paint, wash it off immediately with water.**
- **Clean all parts in brake fluid and air dry; blow out all passage with compressed air.**
- **Before reassembling, check that all parts are free of dust and other foreign particles.**
- **Replace parts with new ones whenever specified to do so.**
- **Make sure no dirt or other foreign matter is allowed to contaminate the brake fluid.**
- **Do not mix different brands of brake fluid as they may not be compatible.**
- **Do not reuse the drained fluid. Use only clean DOT 3 or 4 brake fluid.**

NOTE:

- Coat piston, piston seal, and caliper bore with clean brake fluid.
- Replace all rubber parts with new ones whenever disassembled.

GREASE : Brake cylinder grease (P/N: 08733—B020E) or equivalent rubber grease.

GREASE : Use the recommended grease in the caliper seal set.

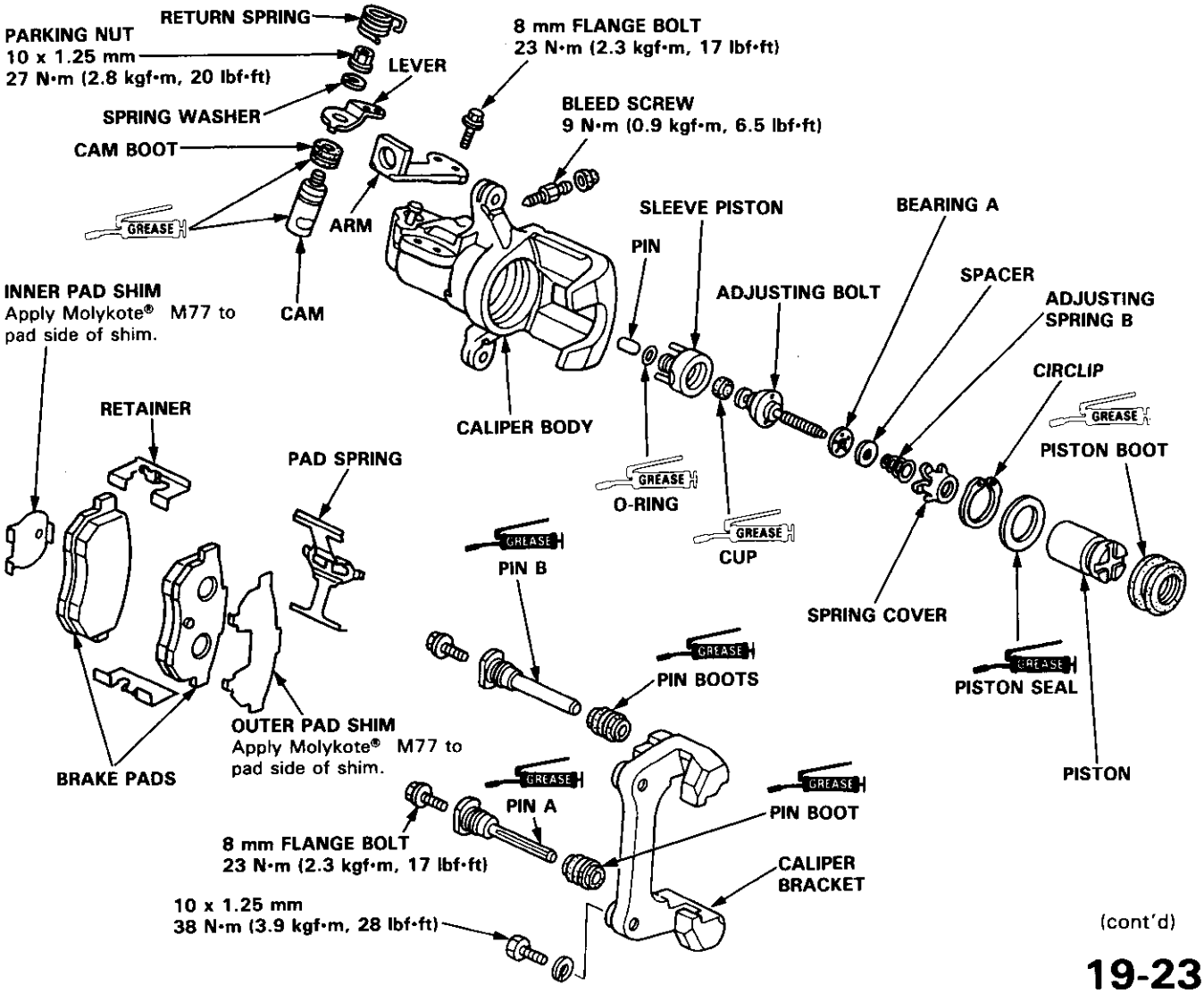

(cont'd)

Reassembly (cont'd)

1. Pack all cavities of the needle bearing with the recommended grease.

2. Coat the new cam boot with the recommended grease, and install it in the caliper body.

3. Apply the recommended grease to the pin contacting area of the cam, and install the cam and lever assembly into the caliper body.

4. Install the return spring.

   CAUTION:
   - **When the cam and lever were separated, be sure to assemble them before installing the cam in the caliper body. Install the lever and spring washer, apply locking agent to the threads, and tighten the parking nut while holding the lever with a vise.**
   - **Avoid damaging the cam boot since it must be installed before the cam.**
   - **When installing the cam, do not allow the cam boot lips to turn outside in.**

   GREASE : Brake cylinder grease (P/N: 08733–B020E) or equivalent rubber grease.

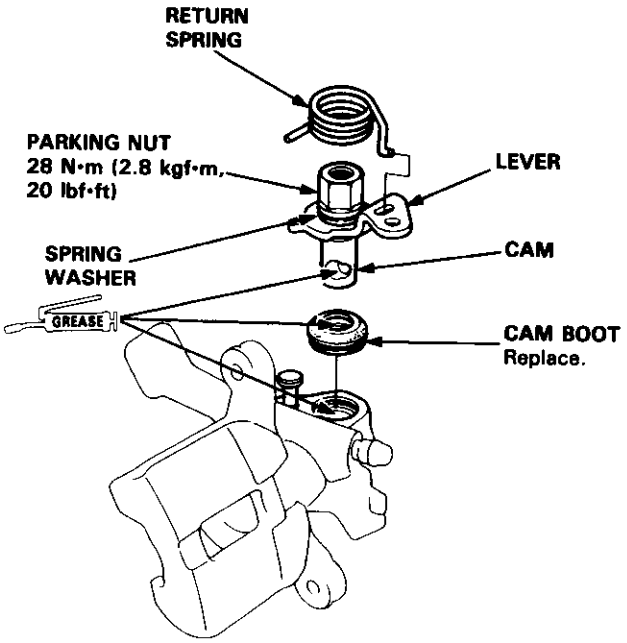

5. Install the pin in the cam.

6. Apply the recommended grease to the new O-ring, and install it on the sleeve piston.

7. Install the sleeve piston so the hole in the bottom of the piston is aligned with the pin in the cam, and the two pins on the piston are aligned with the holes in the caliper.

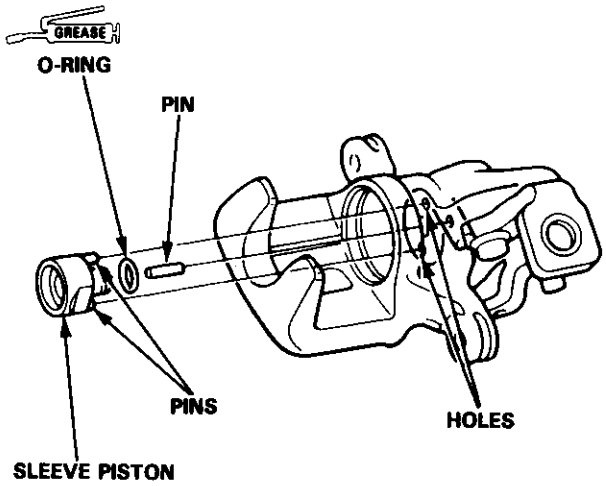

8. Coat a new cup with recommended grease, and install it with its groove facing the bearing A side of the adjusting bolt.

9. Fit the bearing A, spacer, adjusting spring B and spring cover on the adjusting bolt, and install them in the caliper cylinder.

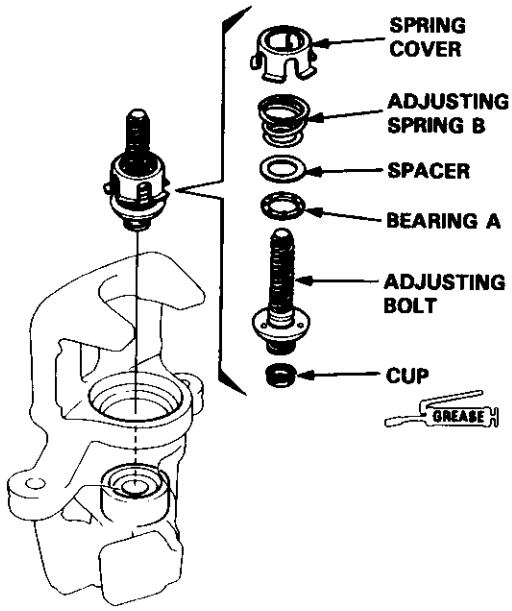

10. Install the special tool on the spring cover, and turn the shaft until the locknut contacts the plate.

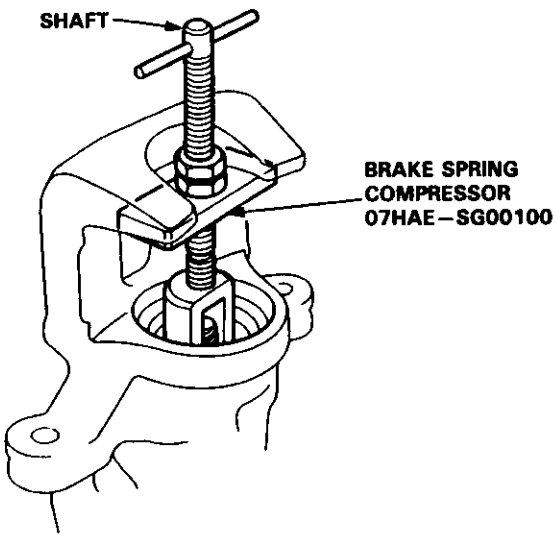

11. Check that the flared end of the spring cover is below the circlip groove.

12. Install the circlip in the groove, then remove the special tool.

NOTE: Check that the circlip is seated in the groove properly.

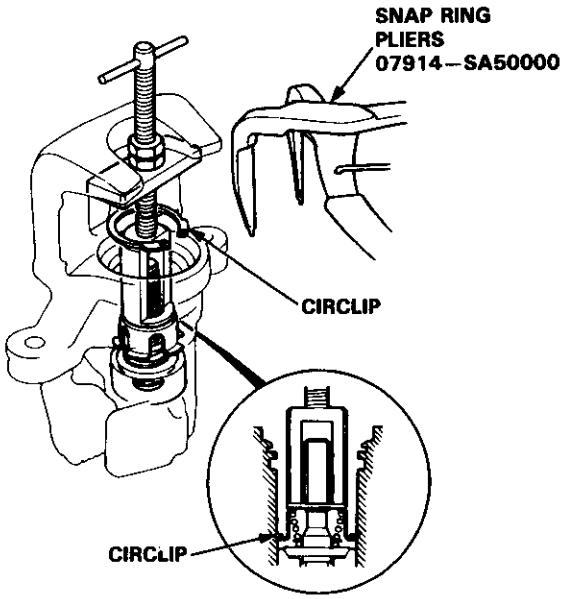

13. Coat a new piston seal with silicone grease, and install it in the caliper.

14. Apply brake cylinder grease (P/N: 08733–B020E) or equivalent rubber grease to the sealing lips and inside of a new piston boot, and install it in the caliper.

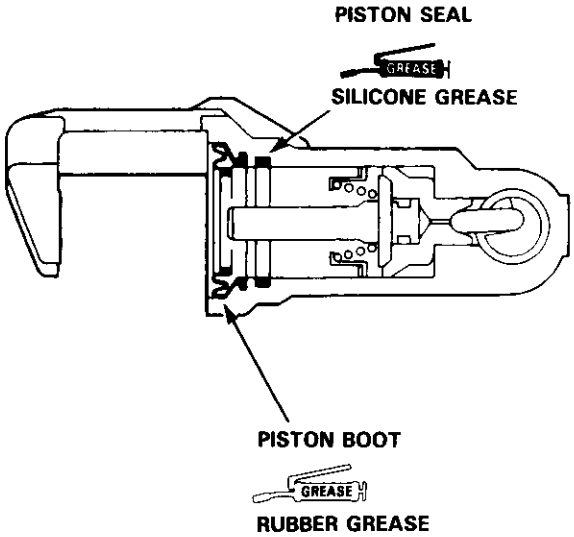

15. Coat the outside of the piston with brake fluid, and install it on the adjusting bolt while rotating it clockwise with the special tool.

CAUTION: Avoid damaging the piston and piston boot.

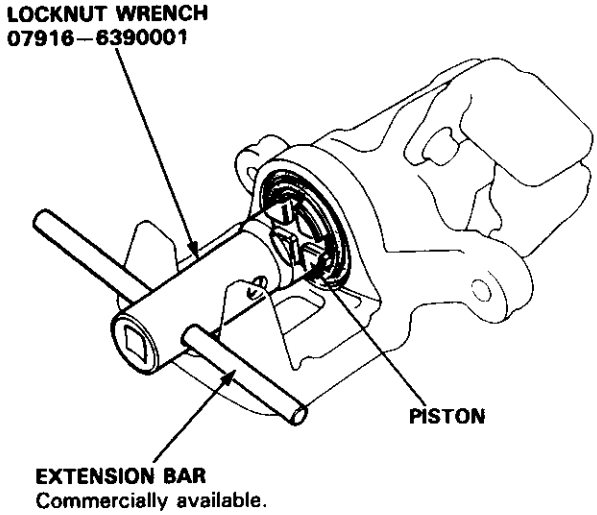

(cont'd)

Reassembly (cont'd)

16. Install the pad spring on the caliper.

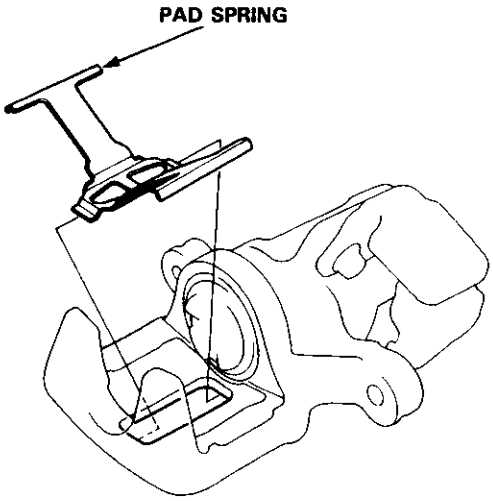

17. Apply the recommended grease in the caliper seal set to the sliding surface of the pins and inside the new pin boots.

18. Install the pin boots into the groove in the caliper bracket properly.

19. Insert the pin A and pin B into the caliper bracket.

20. Install the pin boots into the grooves in the pins properly.

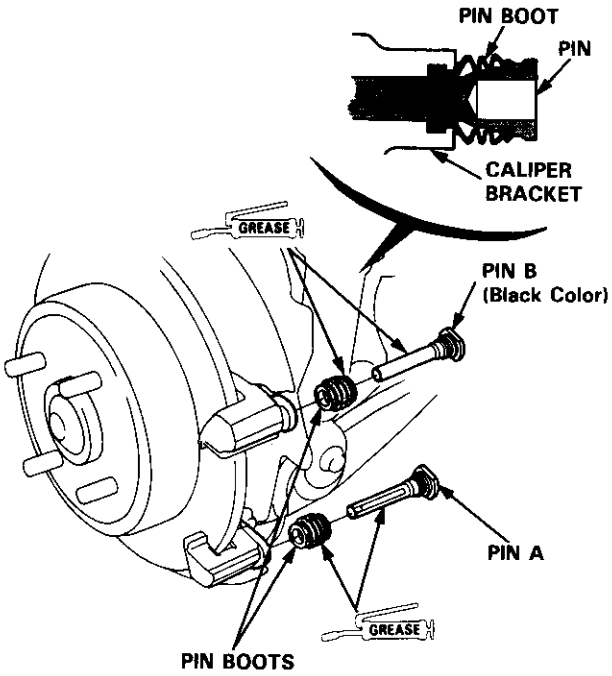

21. Install the brake pad retainers and brake pads (see page 19-17).

22. Align the cutout in the piston with the tab on the inner pad (see page 19-18).

23. Install the caliper on the caliper bracket, and tighten the caliper mounting bolts.

24. Connect the brake hose to the caliper with new sealing washers, and tighten the banjo bolt.

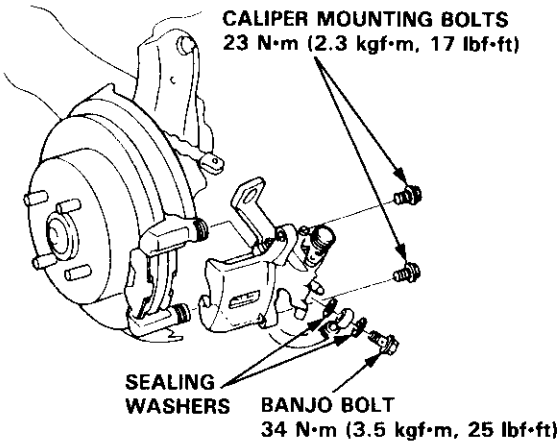

25. Insert the cable through the arm, and connect the cable to the lever with the clevis pin and lock pin. Install the cable clip securely.

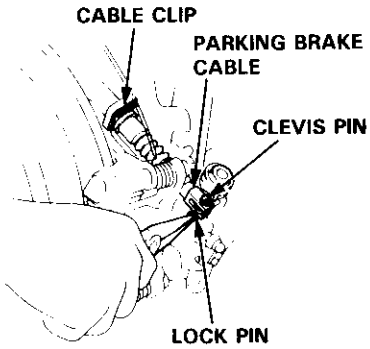

26. Fill the brake reservoir and bleed the brake system (see page 19-6).

27. Operate the brake pedal several times, then adjust the parking brake (see page 19-5).

28. After installation, perform the following checks.

- Check for leaks at hose and line joints or connections, and retighten if necessary.
- Check the parking brake lever for operation, and adjust it if necessary.

Brake Hoses/Pipes

Inspection

1. Inspect the brake hoses for damage, deterioration, leaks, interference or twisting.
2. Check the brake lines for damage, rusting or leakage. Also check for bent brake lines.
3. Check for leaks at hose and line joints or connections, and retighten if necessary.

CAUTION: Replace the brake hose clip whenever the brake hose is serviced.

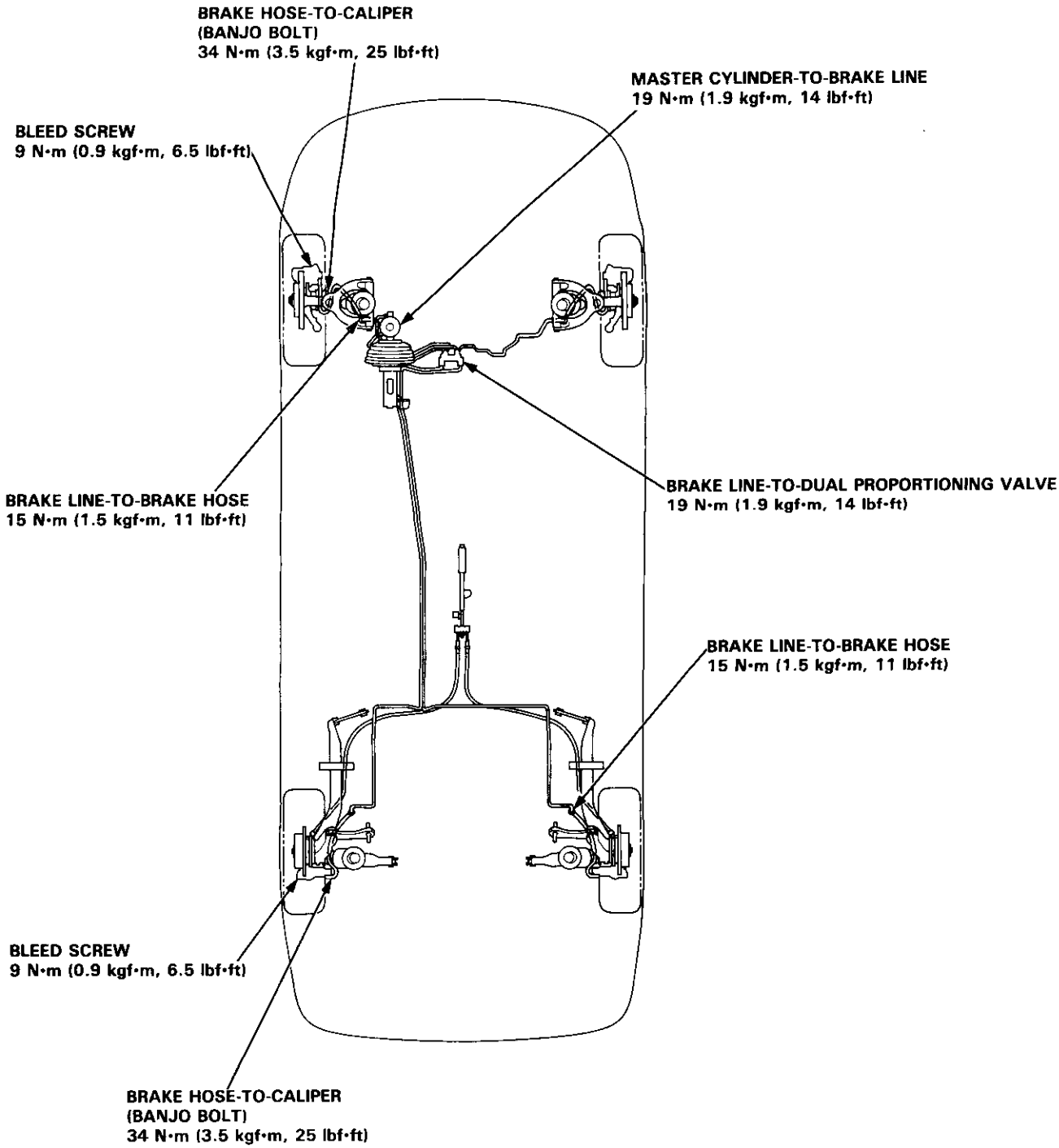

Hose Replacement

CAUTION:
- **Before reassembling, check that all parts are free of dust and other foreign particles.**
- **Replace parts with new ones whenever specified to do so.**
- **Do not spill brake fluid on the car; it may damage the paint; if brake fluid does contact the paint, wash it off immediately with water.**

1. Replace the brake hose if the hose is twisted, cracked, or if it leaks.

2. Disconnect the brake hose from the brake pipe using a 10 mm flare nut wrench.

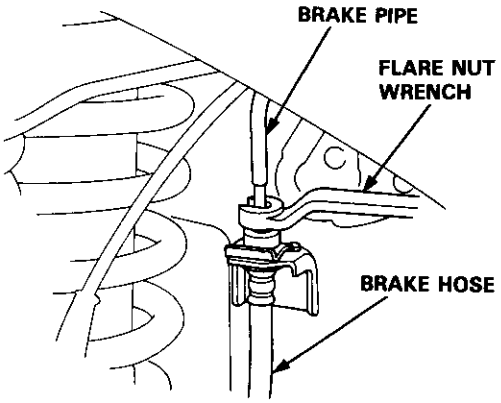

3. Remove and discard the brake hose clip from the brake hose.

4. Remove the banjo bolt, and disconnect the brake hose from the caliper.

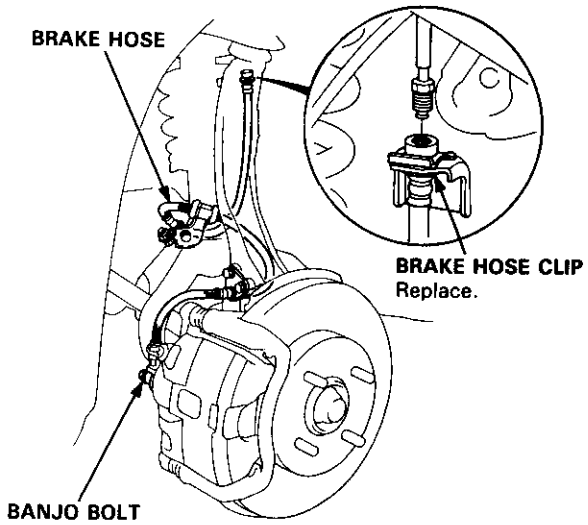

5. Install the brake hose on the knuckle and damper first, then connect the brake hose to the caliper with the banjo bolt and new sealing washers.

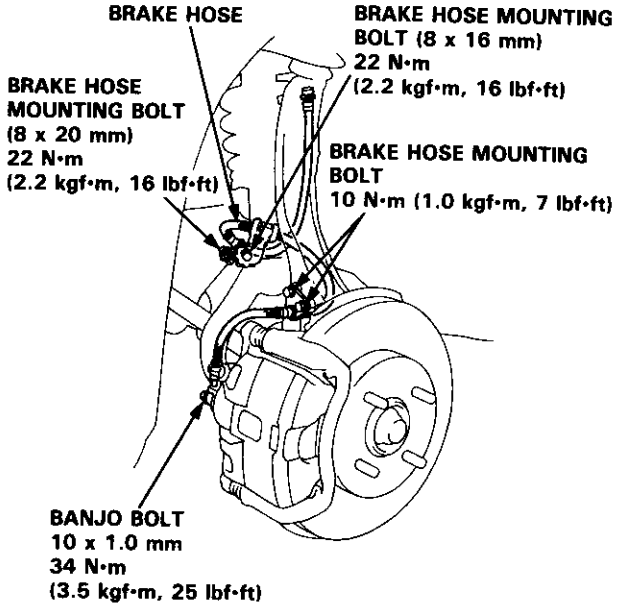

CAUTION: Do not twist the brake hose excessively.

6. Install a new brake hose clip on the brake hose.

7. Connect the brake pipe to the brake hose.

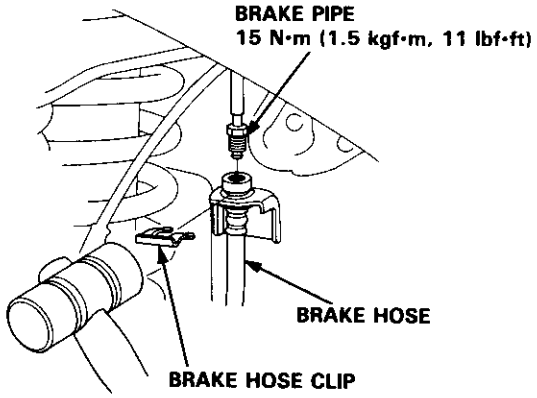

8. After installing the brake hose, bleed the brake system (see page 19-6).

9. Perform the following checks.
   - Check the brake hose and line joint for leaks, and tighten if necessary.
   - Check the brake hoses for interference or twisting.

Parking Brake Cable

Inspection and Replacement

CAUTION: The parking brake cables must not be bent or distorted. This will lead to stiff operation and premature cable failure.

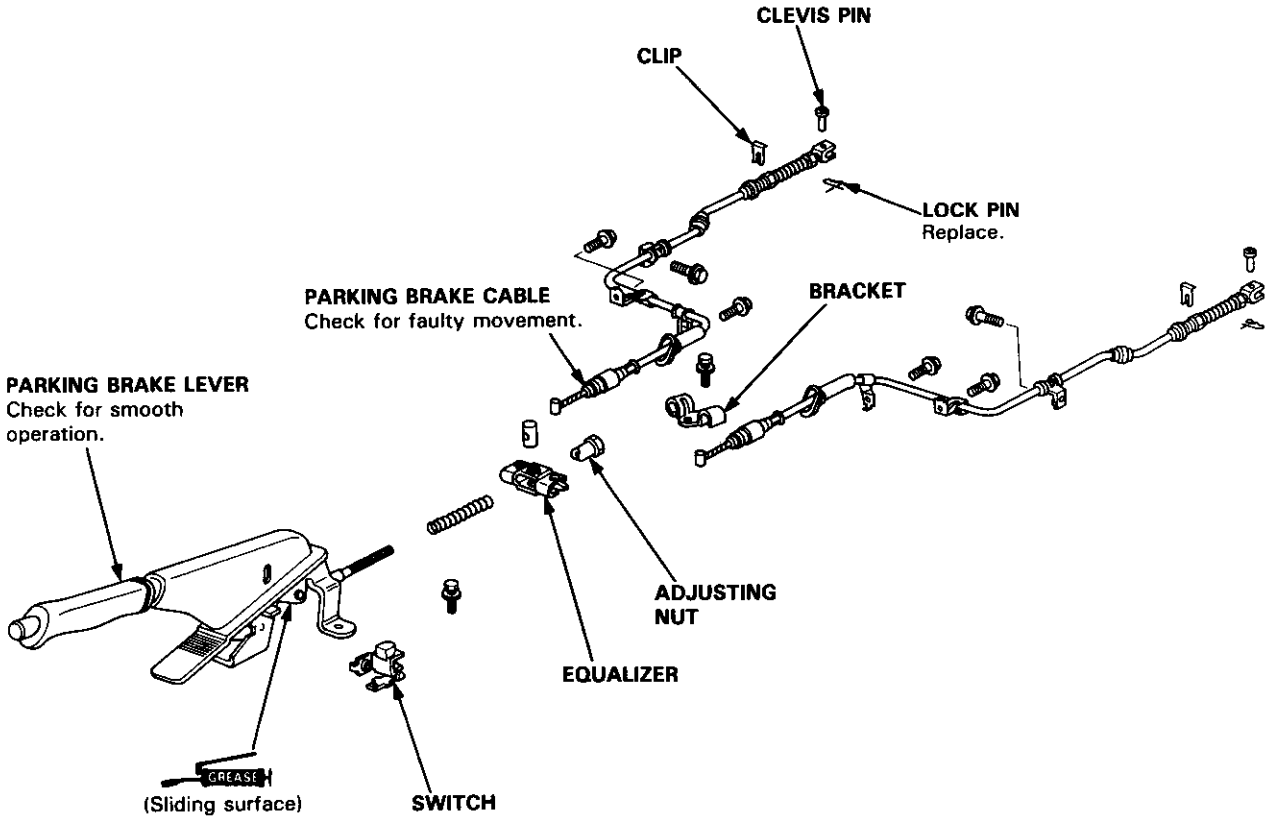

Disconnect the parking brake cable from the lever on the caliper by removing the lock pin and clevis pin, and remove the cable from the arm by removing the clip.

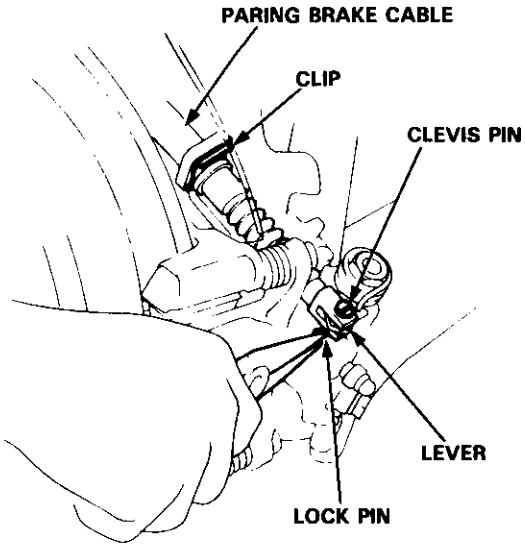

Anti-lock Brake System (ABS)

Special Tools 19-32
Illustrated Index 19-33
Anti-lock Brake System (ABS)
  Features/Construction 19-34
  Operation 19-40
Components Location 19-44
Wiring/Connector Location 19-46
Circuit Diagram 19-50
ABS Control Unit Terminal Arrangement 19-52
Oscilloscope Waveform 19-54
Troubleshooting Procedure 19-55
Diagnostic Trouble Code (DTC) Indication ... 19-56
Diagnostic Trouble Code (DTC)
  Symptom-to-System Chart 19-58
Troubleshooting
  ABS Indicator Light Does Not Come On .. 19-62
  ABS Indicator Light Does Not Go Off 19-65
  ABS Pump Motor Over-run 19-71
  ABS Pump Motor 19-74
  High Pressure Leakage 19-81
  Pressure Switch 19-83
  High Pressure System 19-85
  Parking Brake 19-87
  Pulser/Different Diameter Tire 19-92
  Right-Front Wheel Sensor 19-93
  Left-Front Wheel Sensor 19-98
  Right-Rear Wheel Sensor 19-103
  Left-Rear Wheel Sensor 19-108
  Rear Wheel Lock 19-113
  Front and Rear Fail-safe Relays 19-116
  Front Fail-safe Relay 19-119
  Rear Fail-safe Relay 19-122
  Right-Front Solenoid 19-125
  Left-Front Solenoid 19-130
  Rear Solenoid 19-139
  ABS Function 19-147
  ABS Control Unit 19-148
ABS Function Test 19-149
  Modulator Function Check 19-151
Modulator Unit
  Relieving System Pressure 19-152
  Brake Fluid Replacement 19-152
  Removal/Installation 19-154
  Wire Harness Replacement 19-155
  Pump Motor Replacement 19-156
  Disposal 19-156
Electronic Components
  ABS Control Unit Replacement 19-157
  Relay Inspection 19-157
Pulsers/Wheel Sensors
  Inspection 19-158
  Wheel Sensor Replacement 19-159

Special Tools

Ref. No.	Tool Number	Description	Qty	Page Reference
①	*07HAJ–SG0010A or 07HAJ–SG0010B	ALB Checker	1	
②	07PAZ–0010100	SCS Short Connector	1	

*: The ALB checker 07HAJ–SG00XXX can be used. (XXX: unspecified number)

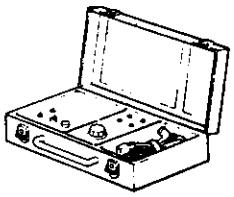

①

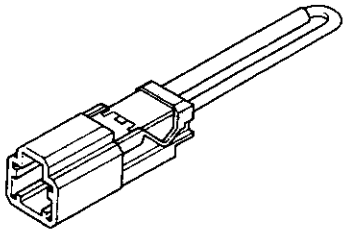

②

⚠ WARNING The accumulator contains high pressure nitrogen gas, do not puncture, expose to flame, or attempt to disassemble the accumulator, or it may explode; severe personal injury may result.

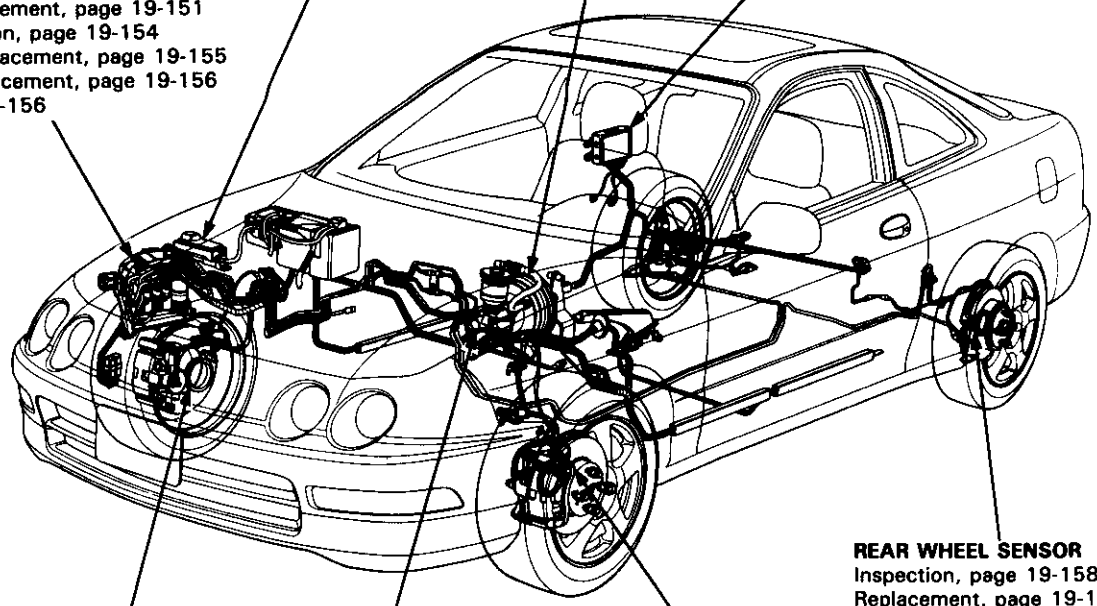

MODULATOR UNIT
ABS Function Test, page 19-149
Modulator Function Check, page 19-151
Relieving System Pressure, page 19-151
Brake Fluid Replacement, page 19-151
Removal/Installation, page 19-154
Wire Harness Replacement, page 19-155
Pump Motor Replacement, page 19-156
Disposal, page 19-156

ABS MOTOR RELAY
Inspection, page 19-157

BRAKE BOOSTER
Inspection, page 19-15
Replacement, page 19-16

ABS CONTROL UNIT
Replacement, page 19-157

REAR WHEEL SENSOR
Inspection, page 19-158
Replacement, page 19-159

FRONT WHEEL SENSOR
Inspection, page 19-158
Replacement, page 19-159

FAIL-SAFE RELAYS
Inspection, page 19-157

MASTER CYLINDER
Removal, page 19-13
Inspection/Disassembly, page 19-13
Pushrod Clearance Adjustment, page 19-14
Installation, page 19-15

Anti-lock Brake System (ABS)

Features/Construction

In a conventional brake system, if the brake pedal is depressed very hard, the wheels can lock before the vehicle comes to a stop. In such a case, the stability of the vehicle is reduced if the rear wheels are locked, and maneuverability of the vehicle is reduced if the front wheels are locked, creating an extremely unstable condition.
The Anti-lock Brake System (ABS) modulates the pressure of the brake fluid applied to each front caliper or both rear calipers, thereby preventing the locking of the wheels, whenever the wheels are likely to be locked due to hard braking. It then restores normal hydraulic pressure when there is no longer any possibility of wheel locking.
The ABS equipped on this car is compact, with its hydraulic control system incorporated into one modulator unit. It is a 3-channel anti-lock brake system that has individual control of the front wheels and common control ("Select Low") for the rear wheels. "Select Low" means that the rear wheel that would lock first (the one with the lowest resistance to lock-up) determines anti-lock brake system activation for both rear wheels.

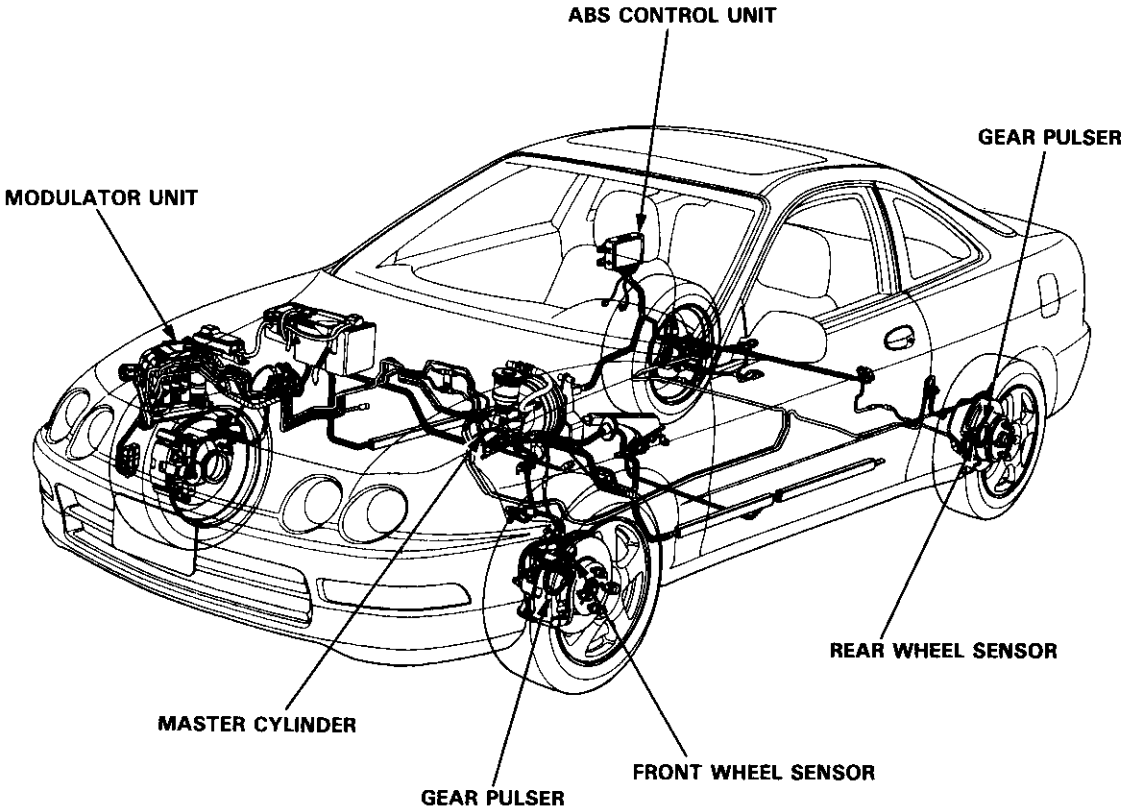

PART NAME	MAJOR FUNCTION
Gear pulser	Attached to the rotating part of the wheel and detects the wheel speed together with the wheel sensor.
Wheel sensor	Generates pulse signal corresponding to the revolution of the gear pulser.
ABS control unit	Controls the working of the anti-lock brake system by performing calculations based on the signals from the individual wheel sensors and the individual switches.
Modulator unit	* Adjusts the hydraulic pressure applied to each caliper on the basis of the signals received from the ABS control unit. * Pump, accumulator, solenoid valves and pistons are integrated in the modulator unit.
Motor Relay	Controls the ABS pump motor's power supply according to the signal from the ABS control unit.
Fail-safe-relay	Cuts off the solenoid valve ground circuit when the fail-safe device is at work.

Modulator Unit:
The modulator unit consists of the following sub-units. It adjusts the hydraulic pressure applied to each caliper on the basis of the signals received from the ABS control unit.

- ABS pump and motor: Supply high-pressure brake fluid to control the ABS operation.
- Accumulator: Stores high-pressure brake fluid in it.
- Pressure switch: Detects the pressure in the accumulator and transmits signals to the ABS control unit.
- Solenoid valves: Switches the ABS high-pressure passage according to the signals from the ABS control unit.
- Pistons and related parts: Receive the high-pressure brake fluid, and control pressure to the calipers accordingly.

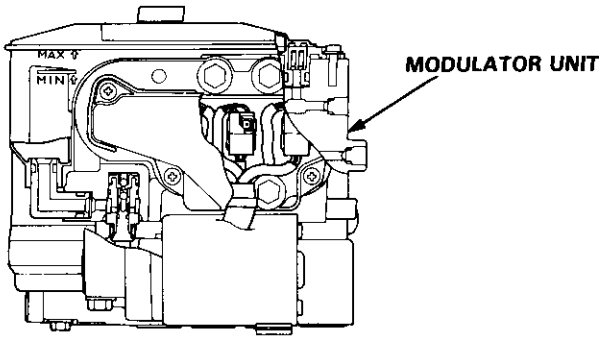

Motor and pump:
As the motor rotates, it drives the plunger-type ABS pump and raises the brake fluid pressure to approximately 25 MPa (250 kgf/cm², 3,600 psi). The eccentric bearing is attached to the motor shaft end, it contacts the plunger of the pump plunger. The motor shaft's rotational motion is transmitted to the reciprocating motion of the pump plunger.
When the plunger is pushed, the brake fluid in the plunger chamber is pressured and fed to the accumulator, solenoid, and piston, via the check valve. When the pressure in the accumulator exceeds 34 MPa (350 kgf/cm², 5,000 psi), the relief valve opens to release the excess brake fluid pressure to the reservoir, and thereby protect the system.

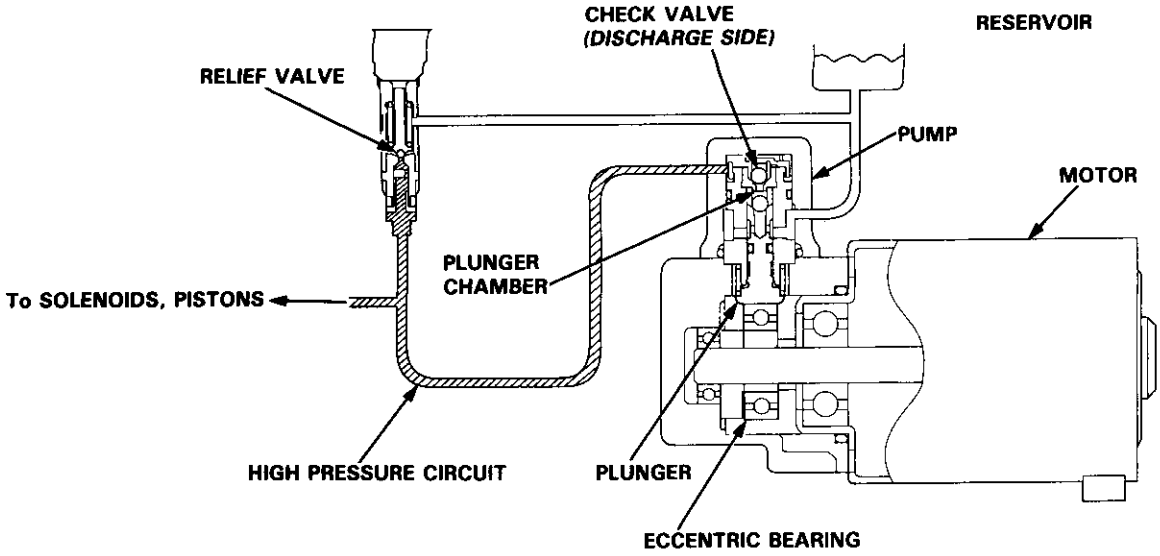

(cont'd)

Features/Construction/Operation (cont'd)

Accumulator:
The high-pressure brake fluid discharged from the pump is fed to the solenoids and pistons, but the passages to the solenoids and pistons are normally closed. Consequently, the high-pressure brake fluid accumulates in the accumulator.
The accumulator consists of two chambers separated by a free piston; that is, the fluid chamber where the brake fluid is accumulated, and the chamber filled with high-pressure nitrogen gas to maintain the fluid at a given pressure.
When the ABS operates, the constant high-pressure brake fluid in the accumulator is supplied to the piston.

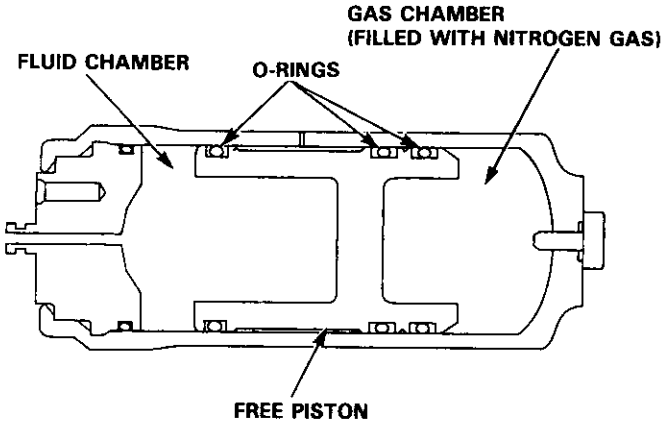

Pressure switch:
The pressure switch monitors the pressure accumulation in the accumulator. When the pressure in the accumulator rises, the Bourdon tube in the pressure switch deforms outward, which in turn activates the micro-switch by the force of the spring attached to the sensing lever. When the pressure in the accumulator drops due to ABS operation, the Bourdon tube moves in the opposite direction, and the micro-switch is eventually turned off.
The ABS control unit detects the fluid pressure in the accumulator by the ON/OFF signals from the pressure switch.

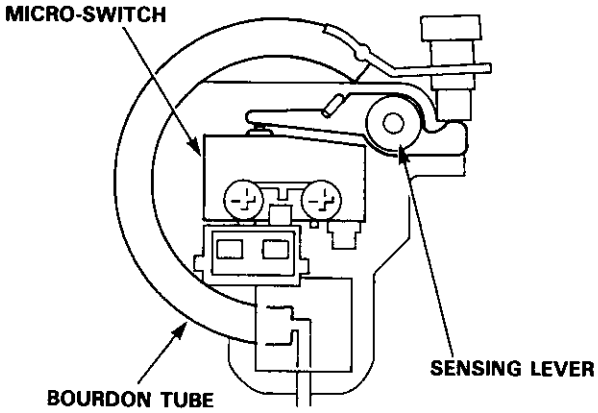

Piston/valve:
The piston/valve assembly consists of the piston, cut valve, and sleeve. There are four piston/valve assemblies in the modulator unit to control the brake fluid pressure to each caliper. The piston/valve assemblies for the rear brakes also serve as proportioning control valves to prevent the rear wheels from locking if the ABS malfunctions or when the ABS is not activated.

Solenoid valve:
The modulator unit opens and closes the inlet and outlet solenoid valves, and shifts the ABS high-pressure passage according to the signals from the ABS control unit. There are three solenoid valve assemblies, each containing an inlet and outlet valve, in the modulator unit; one for each front wheel, and one for both rear wheels. The inlet valves are normally open (open when there is no continuity to the coil), while the outlet valves are normally closed.

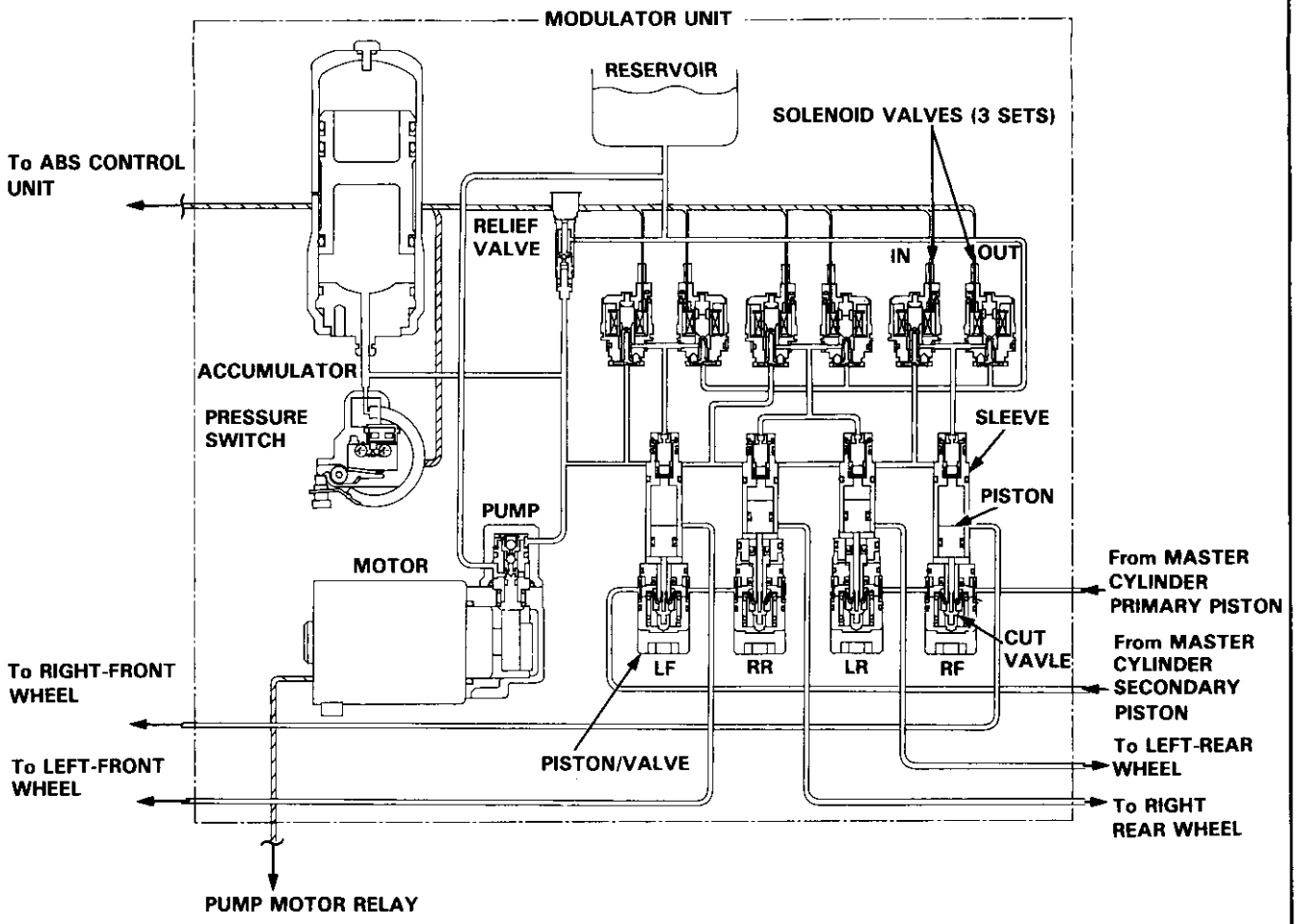

(cont'd)

Features/Construction/Operation (cont'd)

Wheel sensor:
The wheel sensor is a contactless type that detects the rotating speed of a wheel. It consists of a permanent magnet and coil. When the gear pulsers attached to the rotating parts of each wheel turn, the magnetic flux around the coil in the wheel sensor alternates, generating voltages with frequency in proportion to wheel rotating speed. These pulses are sent to the ABS control unit, and the ABS control unit identifies the wheel speed.

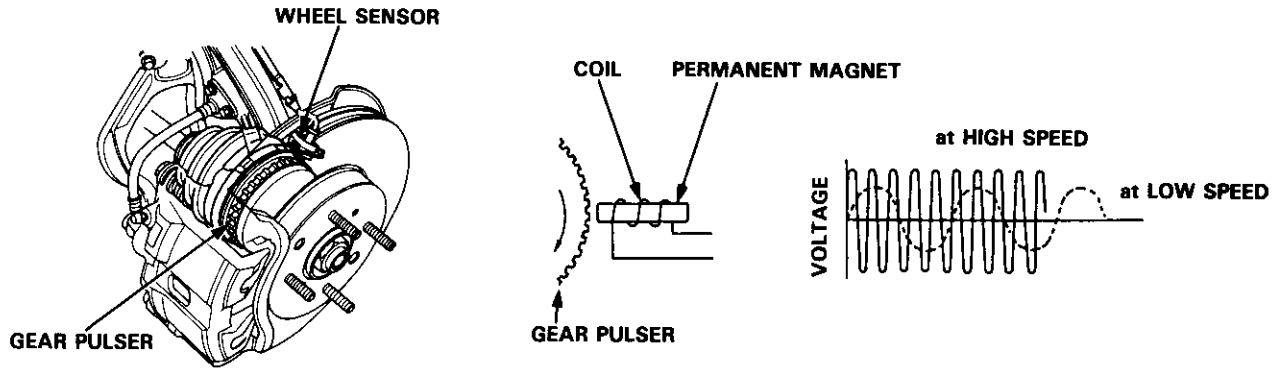

ABS control unit:
The ABS control unit consists of a main function, which controls the operation of the anti-lock brake system, and sub-function, which controls the pump motor and "self-diagnosis"
For safety, the main function consists of two systems, and the ABS control unit activates the solenoid valve only when the outputs of the two systems agree with each other.

- The main function section of the ABS control unit performs calculations on the basis of the signals from each wheel sensor, and controls the operation of the anti-lock brake system by activating the solenoid valves in the modulator unit for each front brake and for the two rear brakes. The ABS has individual control of the front wheels and common control ("Select Low") for the rear wheels. "Select Low" means that the rear wheel that would lock first (the one with the lowest resistance to lock-up) determines the ABS activation for both rear wheels.
- The sub-function section has the fail-safe function that monitors the system operation by inputting the brake switch, parking brake switch and pressure switch signals, and stops the anti-lock brake system when it detects an abnormality in the system. It also has a self-diagnosis function and the pump motor control function.

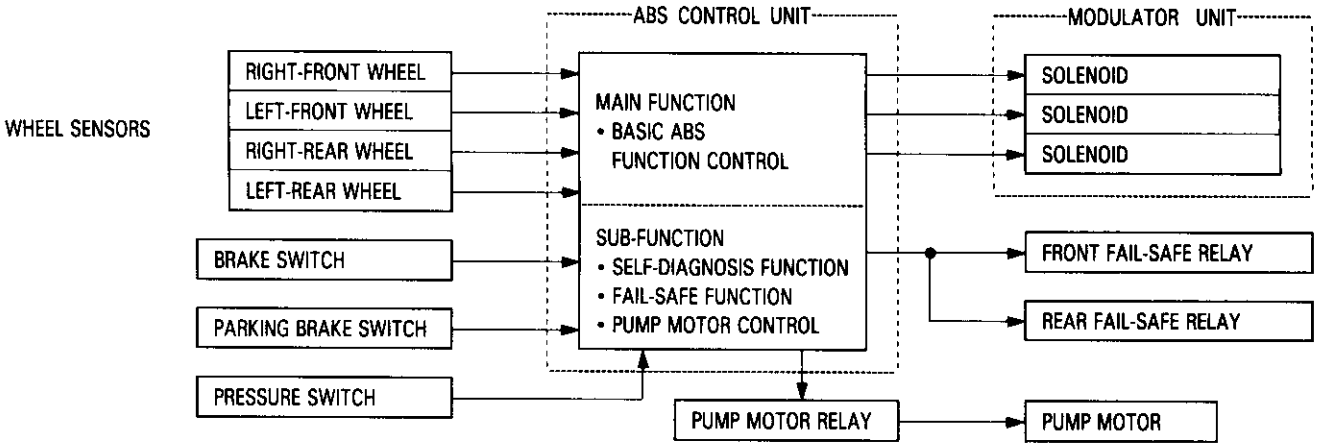

Pump motor control:
The ABS control unit monitors the brake fluid pressure in the accumulator by the pressure switch ON/OFF signals. The ABS control unit turns the pump on when the pressure in the accumulator drops, and stops the pump when the pressure rises to the specified value.
If the pressure does not reach the specified value after the motor has operated continuously for a specified period, the ABS control unit stops the motor and activates the ABS indicator light.

Self-diagnosis function:
The self-diagnosis function, provided in the sub-function of the ABS control unit, monitors the main system functions by constantly transmitting the data between the two Central Processing Units (CPUs). When an abnormality is detected, the ABS control unit turns the ABS indicator light on and stops the ABS, although the basic brake system continues to operate normally.
When the ABS control unit detects an abnormality with the ABS and turns the ABS indicator light on, the diagnostic trouble code (DTC), which shows the problem part or unit, is recorded in the control unit. The DTC can be read by the blinking frequency of the ABS indicator light.

Fail-safe function:
When an abnormality is detected in the ABS control system self-diagnosis, the solenoid operations are suspended by turning off the two fail-safe relays. This disconnects the ground circuits of all the solenoid valves to prevent *ABS operation.*
Under these conditions, the braking system functions just as an ordinary one.

Fail-safe relay:
The fail-safe relay's terminal side contact is normally open. When there is continuity at the relay coil, the fail-safe relay is closed, thereby connecting the ground circuit to the solenoid valve.

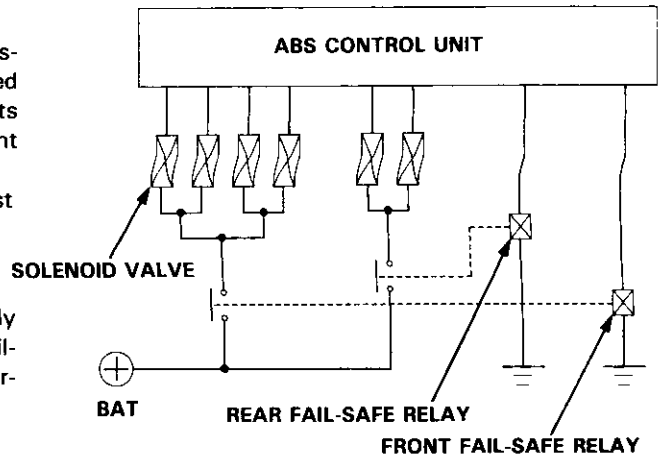

ABS indicator light:
The ABS control unit turns the ABS indicator light on when one or more of the following abnormalities are detected. *This is only a partial list.*
- When the operating time of the motor in the power unit exceeds the specified period.
- When vehicle running time exceeds 30 seconds without releasing the parking brake.
- When absence of speed signals from any of the four wheel sensor is detected.
- When the activation time of all solenoids exceeds a given time, or an open circuit is detected in the solenoid system.
- When solenoid output is not detected in the simulated ABS operation when the engine is started or the vehicle is driven.

To check the indicator light bulb, the light is activated when the ignition switch is first turned on. The light goes off after the engine is started if there is no abnormality in the system.

Operation

The following description of ABS operation is for one of the front wheels. The ABS operation for the remaining wheels is the same.

Ordinary braking function:
In ordinary brake operations when the ABS is not functioning, the solenoid outlet valve is closed and the inlet valve is open, the brake fluid pressure is transmitted to the back-pressure chamber between the sleeve and piston, and the cut valve is pushed by the piston. As the high-pressure is also transmitted the chamber A between the sleeve and cylinder, the sleeve pushes the cut valve seat toward the cut valve, too.
Under there conditions, the cut valve is kept open and the hydraulic pressure from the master cylinder is transmitted to the caliper just like an ordinary brake system.

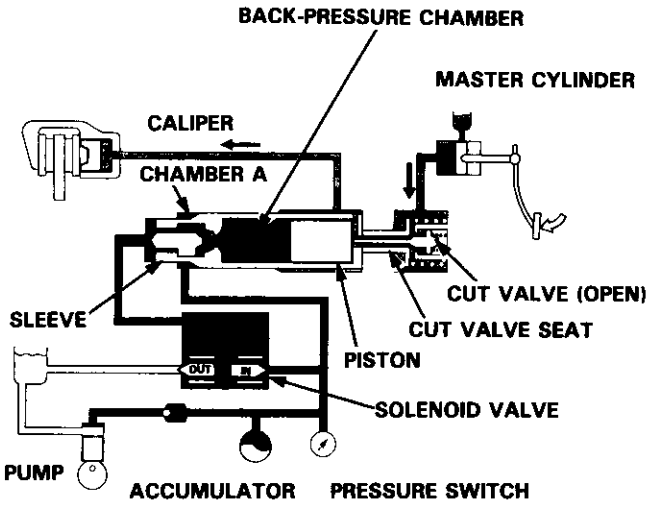

When ABS is functioning:

- Control by reducing caliper fluid pressure:
  When brake inputs (force exerted on brake pedal) are excessively large, and a possibility of wheel locking occurs, the control unit operates the solenoid valve, closing the inlet valve and opening the outlet valve. As a result, high pressure in the back-pressure chamber is released to the reservoir, and the piston is pushed by the caliper fluid pressure toward the back-pressure chamber. However, the cut valve seat is kept in the pushed position because high pressure is transmitted to chamber A. As the piston moves, the cut valve moves and shuts the flow from the master cylinder to the caliper, the volume of the pressure reduction chamber connected to the caliper increases, and the fluid pressure in the caliper declines, relieving the braking force. The wheel speed is therefore restored, preventing the wheel from locking.

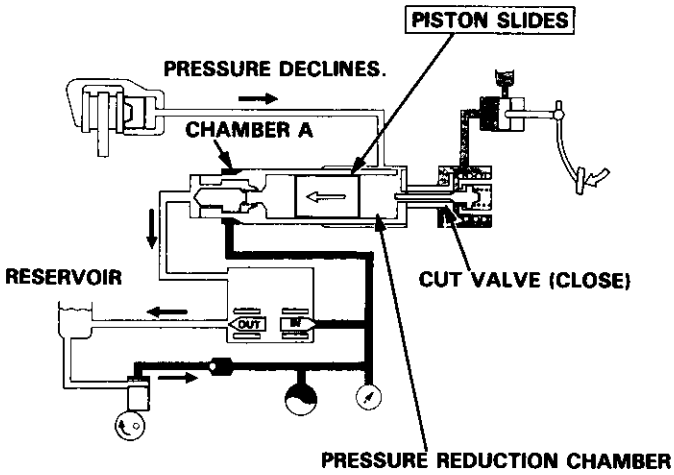

- *Control by increasing caliper fluid pressure:*
  When the ABS control unit senses that the caliper fluid pressure declined, and the wheel speed is restored, it signals the solenoid inlet valve to open and the solenoid outlet valve to close.
  As a result, the high pressure of the brake fluid is transmitted to the back-pressure chamber, and the piston is pushed toward the pressure reduction chamber, increasing the caliper fluid pressure, and thereby the braking force again.
  When the master cylinder side's fluid pressure is low, the cut valve is slightly opened as the piston moves, and the caliper fluid pressure is transmitted to the master cylinder. The kickback is felt on the brake pedal this time. When the force depressing the brake pedal is relieved while the ABS is functioning, the cut valve is opened and the pressure in the pressure reduction chamber is returned to the master cylinder side. As a result, the caliper fluid pressure is relieved.

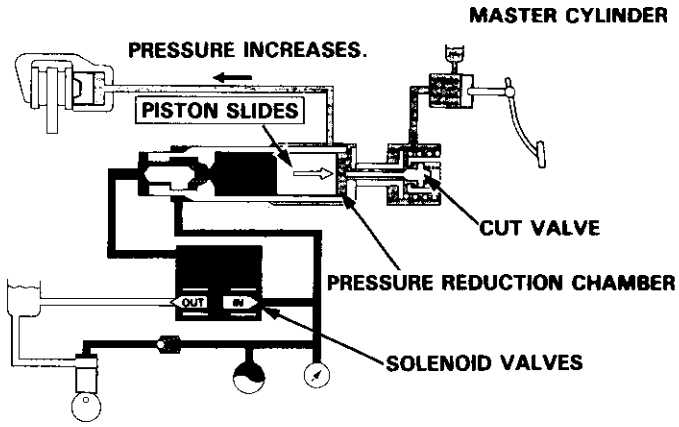

When high-pressure declines:
The ABS control unit monitors the pressure in the high-pressure passage by means of the pressure switch signals. The ABS control unit turns the ABS indicator light on and stops the ABS when it detects an excessive drop in pressure in the high-pressure passage.
When the pressure declined due to, leakage from the passage, for example, the pressure in chamber A declines, too, and the cut valve seat and sleeve return toward chamber A.
As a result, the valve at the sleeve end closes, which hydraulically locks the back-pressure chamber and blocks the piston movement. Because the cut valve opens as the cut valve seat moves, this connects the brake fluid passage between the master cylinder and caliper for ordinary brake operation.

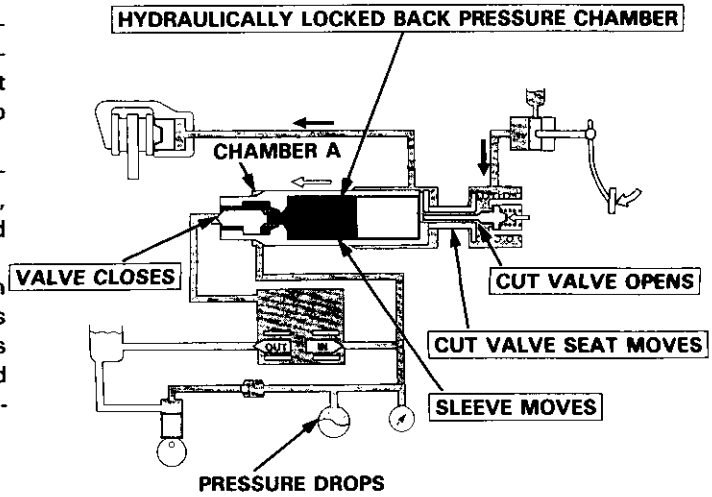

Operation

Proportioning Control Valve Function:
The modulators for the rear brakes serve as proportioning control valves to prevent the rear wheels from locking if the ABS malfunctions or when the ABS is not activated. When this function is not provided, the hydraulic pressure from the master cylinder and the hydraulic pressure to the rear brake system are equal. If the fluid pressure is transmitted to the rear brakes at the same rate as the front brakes, the rear wheels will lock first because the rear axle load becomes lighter when the brakes are applied.
To prevent the rear wheels from locking, the proportioning control valve function changes the distribution rate of the fluid pressure to the rear wheels when the pressure in the rear brake system exceeds the given value of the fluid pressure from the master cylinder. The fluid pressure point where the distribution rate changes is called the turning point.

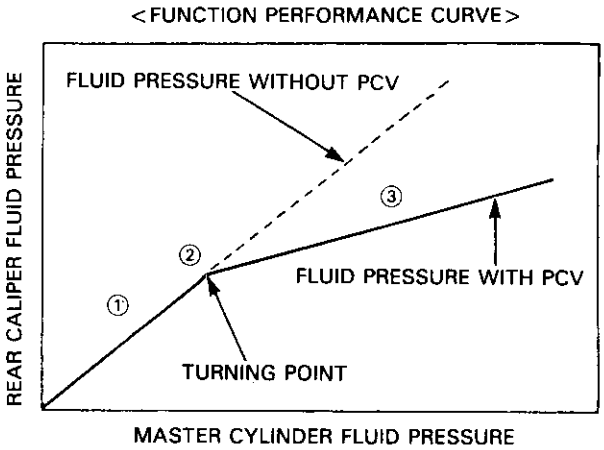

The cut valve seat in the rear brake system has a shoulder between sections A and B. Section A, where pressure from the master cylinder is applied, has a smaller diameter than section B, where pressure from the rear brake caliper is applied. This design provides the proportioning control valve function as follows.

1. When the fluid pressure from the master clyinder is below the turning point, the cut valve seat is pushed by the spring force and the cut valve is open. Therefore, the fluid pressure from the master cylinder is transmitted to the rear brake caliper side. Under these conditions, fluid pressure from the master cylinder is equal to the pressure to the rear brake caliper, but because of the diameter difference between sections A and B, the force on the cut valve overcomes the spring force, moving the cut valve seat toward the cut valve slowly.

2. When the fluid pressure to the rear brake caliper reaches the turning point, the cut valve is closed by the cut valve seat, blocking the fluid passage between the master cylinder side and rear wheel cylinder side.

3. When the fluid from the master cyinder exceeds the turning point, the fluid pressure from the master cylinder rises, while the pressure to the rear brake caliper remains at the turning point value. As a result, the cut valve seat moves away from the cut valve and the cut valve opens. The passage between the master cylinder and caliper opens momentarily, but it is blocked again because the fluid pressure to the brake caliper rises, and the cut valve seat moves to close the cut valve. As described above, when the pressure in the master cylinder is above the turning point, the cut valve seat reduces the pressure in the rear brake caliper to the prescribed amount by repeating this process.

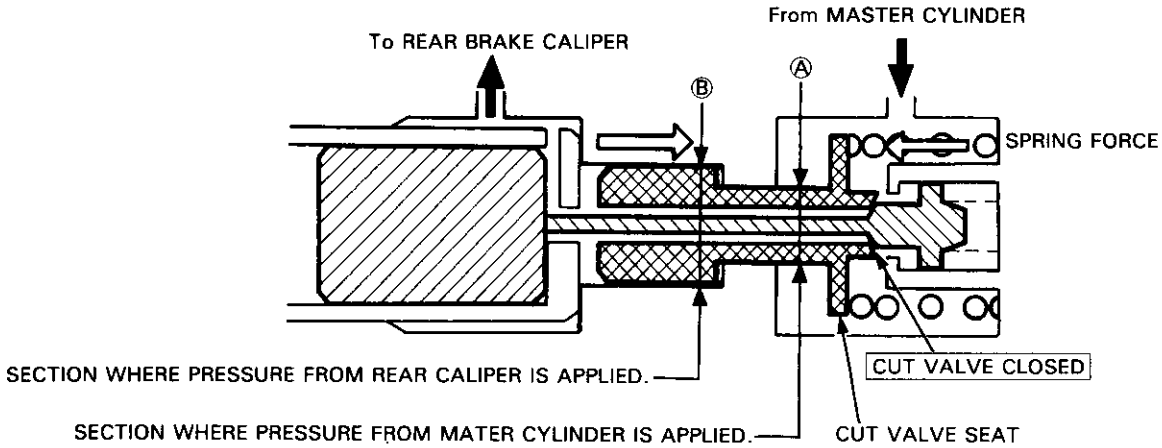

Components Location

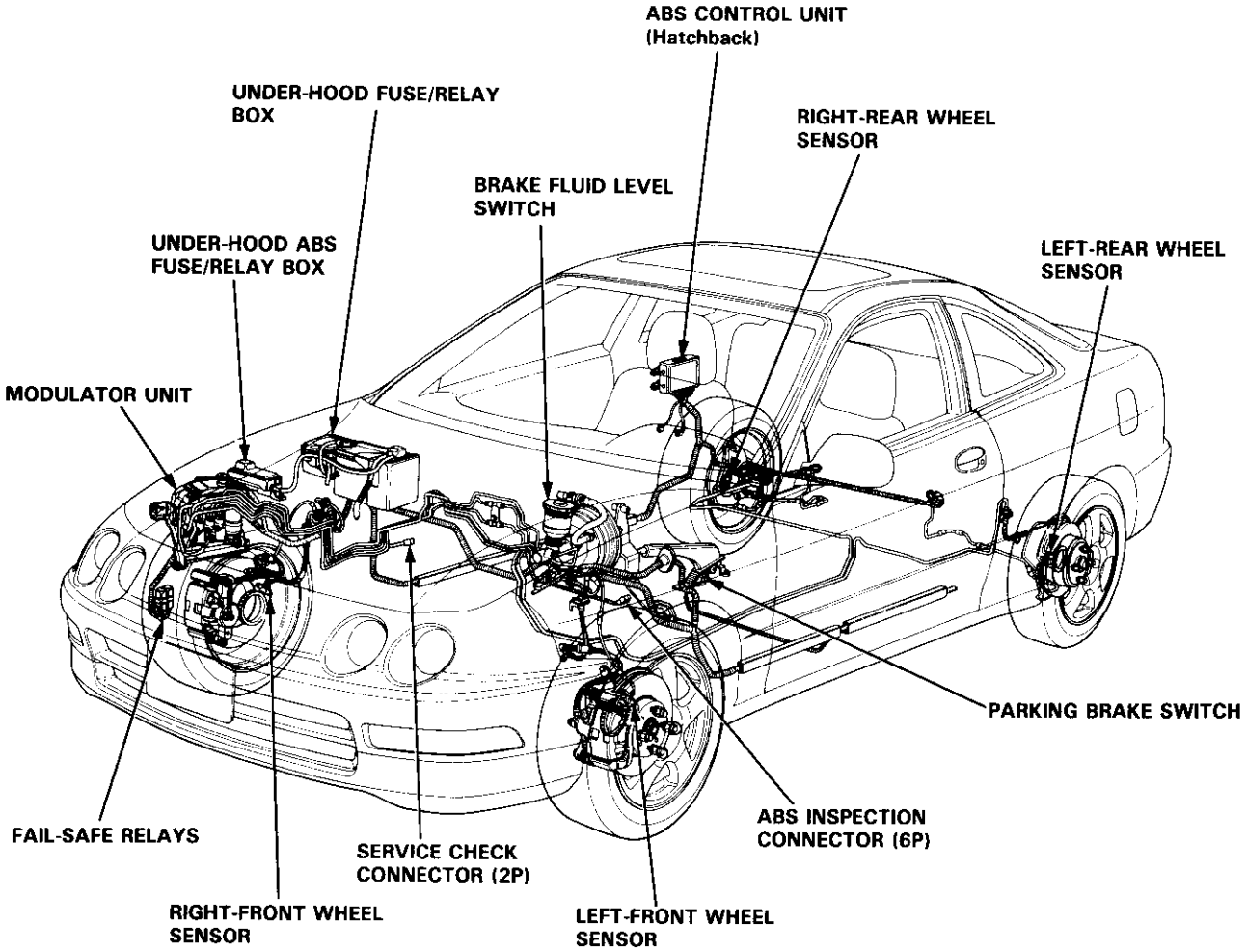

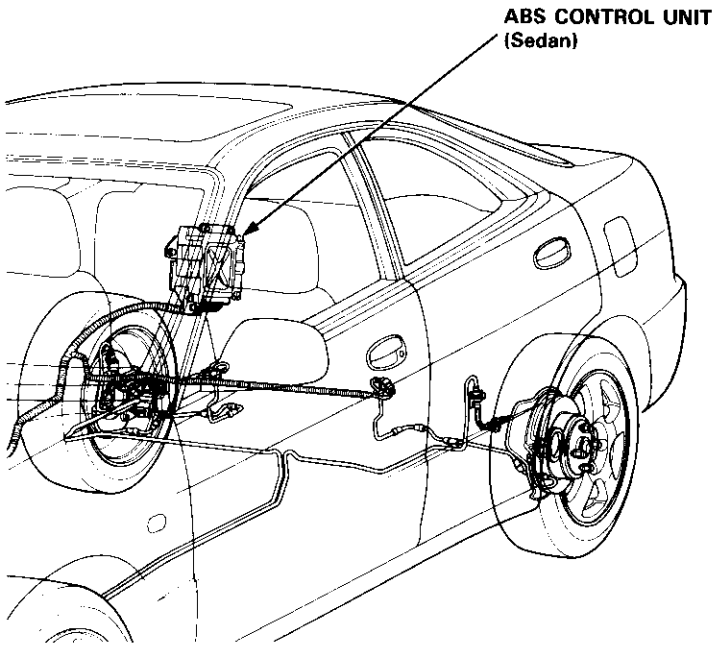

GAUGE ASSEMBLY

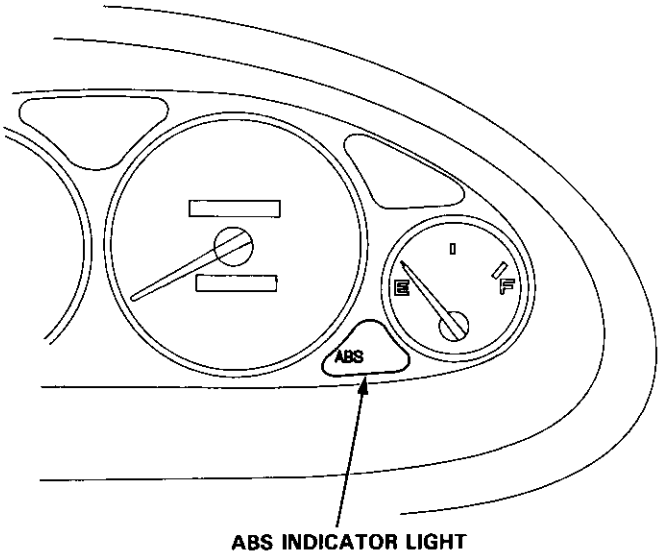

UNDER-HOOD FUSE/RELAY BOX

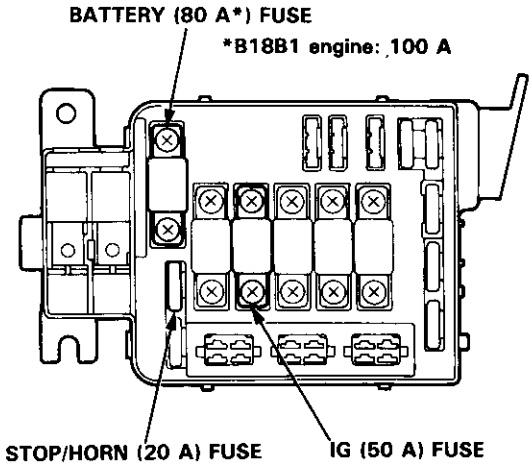

UNDER-DASH FUSE/RELAY BOX

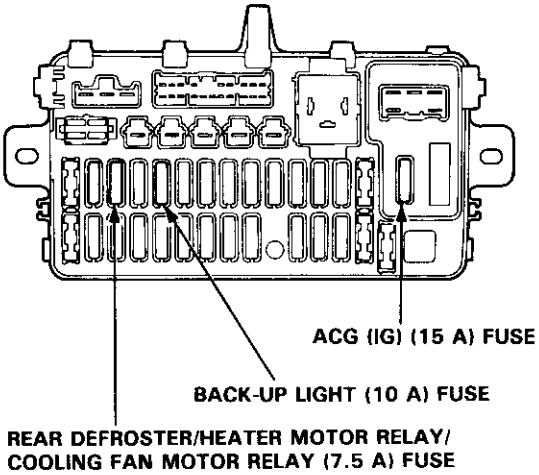

UNDER-HOOD ABS FUSE/RELAY BOX

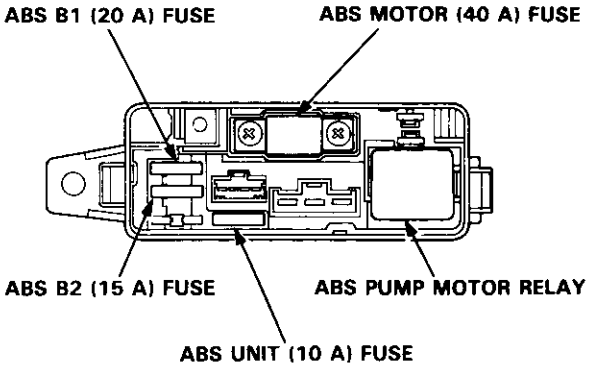

Wiring/Connector Locations

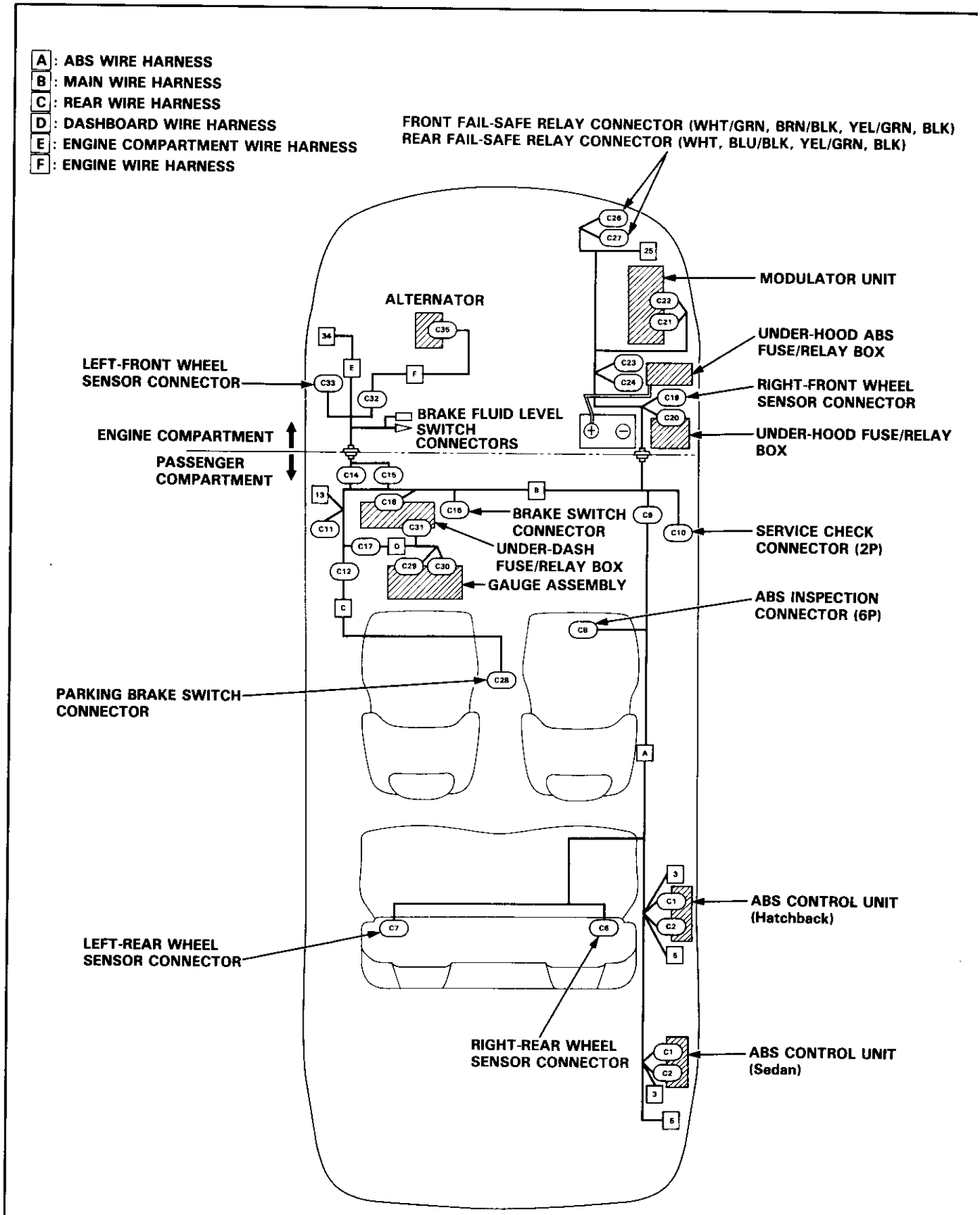

Connector List

NOTE: The single outline indicates the connector which has female terminals, and its terminal numbers are viewed from the wire side. The double outline indicates the connector which has male terminals, and its terminal numbers are viewed from the terminal side.

No.	Wire harness	Number of terminals	Color	Description	Location
C1	A	22P	ORN	ABS control unit connector	Connected to ABS control unit behind the quarter panel (Sedan: on right side of trunk)
C2	A	26P	ORN	ABS control unit connector	
3	A	Ground	—	ABS control unit logic ground	Connected to body under ABS control unit (Sedan: to the ABS control unit bracket
5	A	Ground	—	ABS control unit solenoid ground	Connected to body under ABS control unit
C6	A	2P	ORN	Right-rear wheel sensor connector	Behind right side of rear seat
C7	A	2P	ORN	Left-rear wheel sensor connector	Behind left side or rear seat
C8	A	6P	ORN	ABS inspection connector	Under passenger's seat
C9	B	22P	ORN	Relay connector: ABS wire harness-to-main wire harness	Behind right kick panel
C10	B	2P	BLU	Service check connector	Under right side of glove box
C11	B	8P	GRY	Daytime running lights control unit connector (Canada model only)	Connected to daytime running lights control unit behind left kick panel
C12	B	14P	GRY	Relay connector: Main wire harness-to-rear wire harness	Behind left kick panel
13	B	10P Ground	GRY	Service check connector ground	Connected to body under left side of dash

Connector List

NOTE: The single outline indicates the connector which has female terminals, and its terminal numbers are viewed from the wire side. The double outline indicates the connector which has male terminals, and its terminal numbers are viewed from the terminal side.

No.	Wire harness	Number of terminals	Color	Description	Location
C14	E	20P	GRY	Relay connector: Main wire harness-to-engine compartment wire harness	Under left side of dash
C15	E	20P	BRN	Relay connector: Main wire harness-to-engine compartment wire harness	
C16	B	4P	BLU	Brake switch connector	Connected to brake switch above brake pedal
C17	D	16P	GRY	Relay connector: Main wire harness-to-dashboard wire harness	Above under-dash fuse/relay box
C18	B	22P	GRN	Under-dash fuse/relay box connector	Connected to rear of under-dash fuse/relay box
C19	B	2P	ORN	Right-front wheel sensor connector	Right side of engine compartment
C20	B	2P	GRY	Under-hood fuse/relay box connector	Connected to under-hood fuse/relay box
C21	B	14P	ORN	Modulator unit connector	Connected to modulator at right side or engine compartment
C22	B	2P	ORN	ABS pump motor connector	Connected to ABS pump motor at right side or engine compartment
C23	B	3P	ORN	Under-hood ABS fuse/relay box connector	Connected to under-hood fuse/relay box at right side of engine compartment
C24	B	4P	ORN	Under-hood ABS fuse/relay box connector	
25	B	Ground	—	ABS pump motor ground Pressure switch and fail-safe relay ground	Connected to body at front right side of engine compartment
C26	B	4P	ORN	Front fail-safe relay connector	Connected to fail-safe relays under coolant reservoir
C27	B	4P	ORN	Rear fail-safe relay connector	

No.	Wire harness	Number of terminals	Color	Description	Location
C28	C	1P	GRY	Parking brake switch connector	Connected to parking brake switch
C29	D	13P	GRY	Gauge assembly connector	Connected to rear of gauge assembly
C30	D	16P	GRY	Gauge assembly connector	
C31	D	20P	GRN	Under-dash fuse/ relay box connector	Connected to front of under-dash fuse/relay box
C32	E	14P	GRY	Relay connector: Engine compartment wire harness-to-engine wire harness	Left side of engine compartment
C33	E	2P	ORN	Left-front wheel sensor connector	Left side of engine compartment
34	E	6P Ground	GRY	Brake fluid level switch ground	Connected to body at front left side of engine compartment
C35	F	4P	GRY	Alternator connector	Connected to alternator

Circuit Diagram

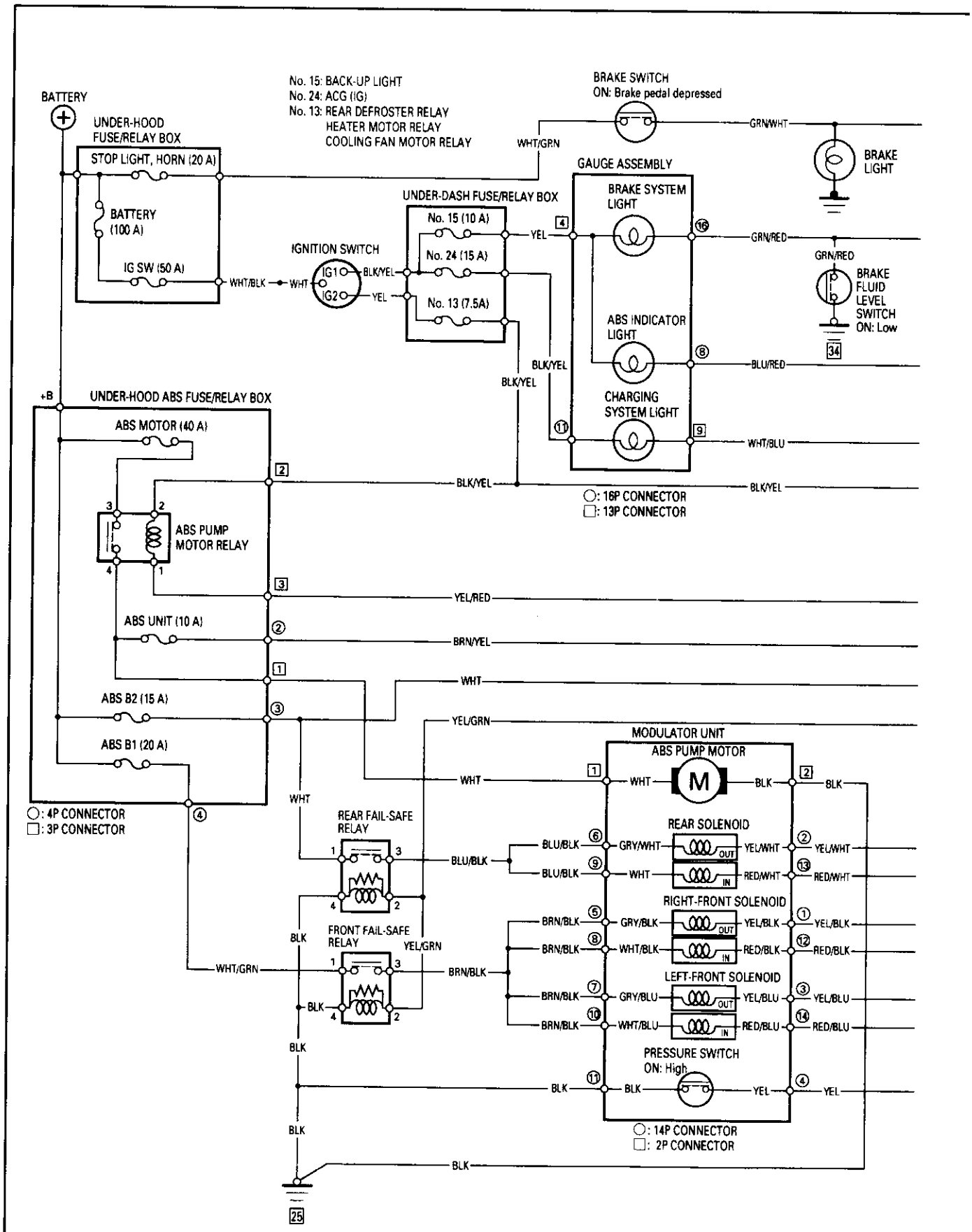

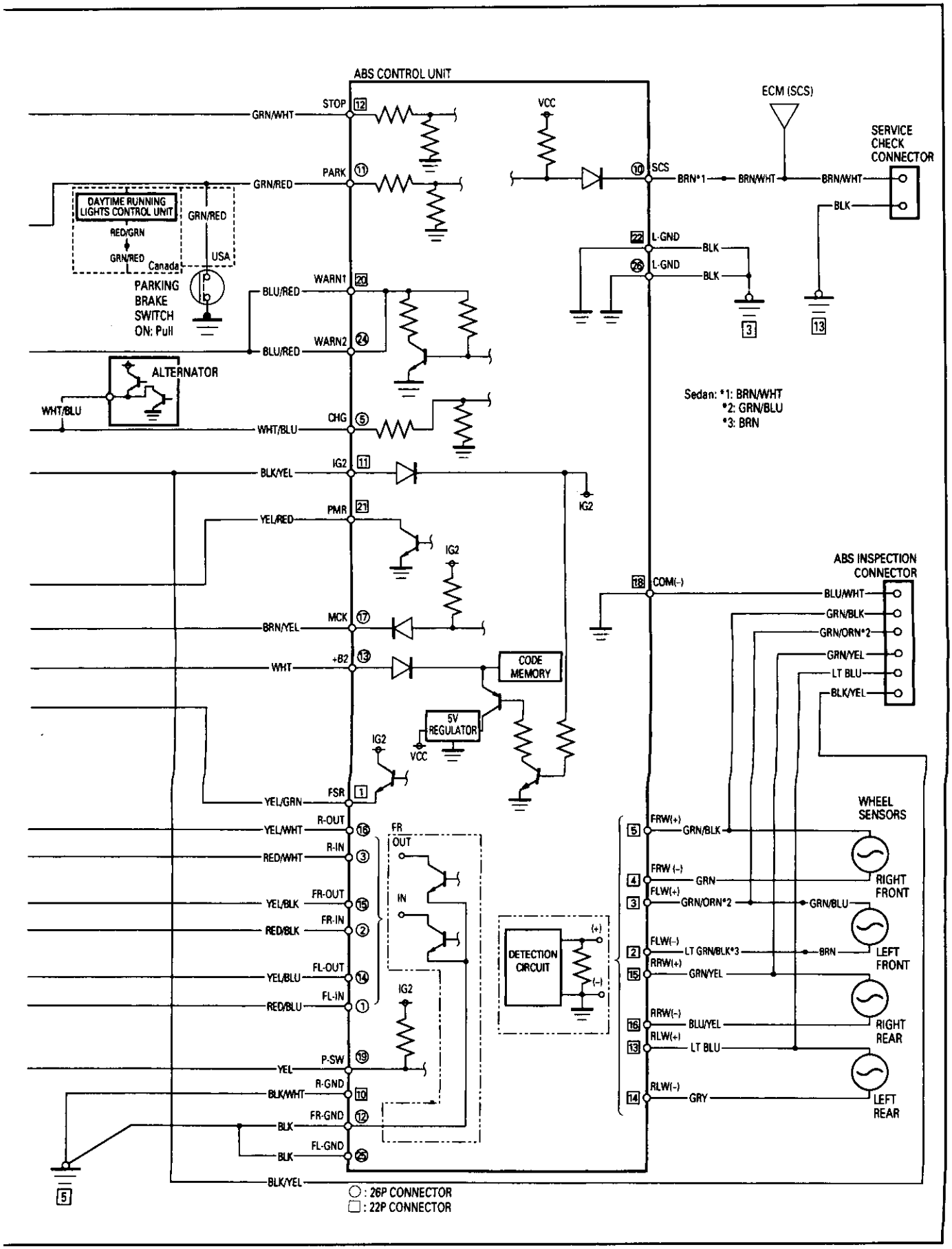
ABS CONTROL UNIT
STOP 12
GRN/WHT
PARK 11
GRN/RED
DAYTIME RUNNING LIGHTS CONTROL UNIT
RED/GRN
GRN/RED
Canada
USA
PARKING BRAKE SWITCH ON: Pull
WARN1 20
BLU/RED
WARN2 24
BLU/RED
ALTERNATOR
WHT/BLU
CHG 5
WHT/BLU
IG2 11
BLK/YEL
PMR 21
YEL/RED
MCK 17
BRN/YEL
+B2 13
WHT
CODE MEMORY
5V REGULATOR
VCC
IG2
FSR 1
YEL/GRN
R-OUT 16
YEL/WHT
R-IN 3
RED/WHT
FR-OUT 15
YEL/BLK
FR-IN 2
RED/BLK
FL-OUT 14
YEL/BLU
FL-IN 1
RED/BLU
FR OUT
IN
P-SW 19
YEL
R-GND 10
BLK/WHT
FR-GND 12
BLK
FL-GND 25
BLK
BLK/YEL
5
VCC
SCS 10
BRN*1
BRN/WHT
ECM (SCS)
SERVICE CHECK CONNECTOR
BLK
L-GND 22
BLK
L-GND 26
BLK
3
13
Sedan: *1: BRN/WHT
*2: GRN/BLU
*3: BRN
COM(-) 18
ABS INSPECTION CONNECTOR
BLU/WHT
GRN/BLK
GRN/ORN*2
GRN/YEL
LT BLU
BLK/YEL
DETECTION CIRCUIT
(+)
(-)
FRW(+) 5
GRN/BLK
FRW(-) 4
GRN
FLW(+) 3
GRN/ORN*2
GRN/BLU
FLW(-) 2
LT GRN/BLK*3
BRN
RRW(+) 15
GRN/YEL
RRW(-) 16
BLU/YEL
RLW(+) 13
LT BLU
RLW(-) 14
GRY
WHEEL SENSORS
RIGHT FRONT
LEFT FRONT
RIGHT REAR
LEFT REAR
○ : 26P CONNECTOR
□ : 22P CONNECTOR

ABS Control Unit Terminal Arrangement

26P CONNECTOR

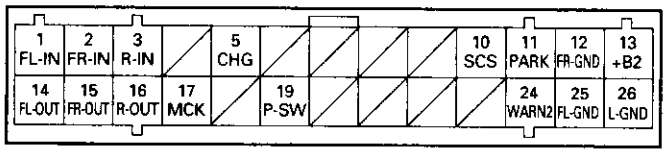

TERMINAL SIDE OF MALE TERMINALS

26P CONNECTOR

NOTE: Standard voltage is 12 V.

Terminal number	Wire color	Terminal name	Description	Signal
1	RED/BLU	FL-IN (Front-left inlet solenoid valve)	Drives left-front inlet solenoid valve	Engine: ON — Solenoid: ON 0 V; OFF 12 V
2	RED/BLK	FR-IN (Front-right inlet solenoid valve)	Drives right-front inlet solenoid valve.	Engine: ON — Solenoid: ON 0 V; OFF 12 V
3	RED/WHT	R-IN (Rear inlet solenoid valve)	Drives rear inlet solenoid valve.	Engine: OFF (Ignition Switch ON) — 0 V
5	WHT/BLU	CHG (Charge)	Detects engine operation. (Activates ABS control unit with engine ON.)	Engine running: 12 V Engine stopped: 0 V
10	BRN BRN/WHT*	SCS (Service check signal)	Detects service check connector signal (diagnostic trouble code indication).	ON: 0 V OFF: 12 V
11	GRN/RED	PARK (Parking brake)	Detects parking brake switch signal. (ABS indicator light is turned on when driving with signal ON.)	ON: 0 V OFF: 12 V
12	BLK	FR-GND (Front-right solenoid valve ground)	Ground for the right-front inlet and outlet solenoid valves.	
13	WHT	+B2 (+B2 power source)	• Power source for ABS control unit control circuit • Power source for diagnostic trouble code memory.	12 V at all time
14	YEL/BLU	FL-OUT (Front-left outlet solenoid)	Drives left-front outlet solenoid valve.	Engine: ON — Solenoid: ON 0 V; OFF 12 V
15	YEL/BLK	FR-OUT (Front-right outlet solenoid valve)	Drives right-front outlet solenoid valve.	Engine: ON — Solenoid: ON 0 V; OFF 12 V
16	YEL/WHT	R-OUT (Rear outlet solenoid valve)	Drives rear outlet solenoid valve.	Engine: OFF (Ignition Switch ON) — 0 V
17	BRN/YEL	MCK (Motor check)	Detects pump motor drive signal. (ABS indicator light is turned on if there is open or short circuit.)	Motor — ON: 12 V OFF: 0 V (Open): 12 V
19	YEL	P-SW (Pressure switch)	Detects pressure switch signal. (Switch turns ON at approx. 22,000 kPa, 220 kgf/cm², 3,100 psi and pump motor is stopped.)	ON: 0 V OFF: 12 V
24	BLU/RED	WARN 2 (Warning lamp)	Drives ABS indicator light. (Shuts off the indicator light ground circuit inside the ABS control unit to turn off the light when the system is normal.)	Light ON: 0 V Light OFF: 12 V
25	BLK	FL-GND (Front-left solenoid valve ground)	Ground for the left-front inlet and outlet solenoid valves.	
26	BLK	L-GND (Logic ground)	Ground for the ABS control unit control circuits.	

*Sedan

22P CONNECTOR

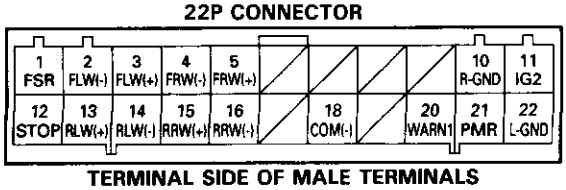

TERMINAL SIDE OF MALE TERMINALS

22P CONNECTOR

NOTE: Standard voltage is 12 V.

Terminal number	Wire color	Terminal name	Description	Signal	
1	YEL/GRN	FSR (Fail-safe relay)	Drives fail-safe relay. (Fail-safe relay is turned OFF to shut off the power source to the solenoid when problem occurs.)	ON: 12 V OFF: 0 V	
2	LT GRN/ BLK BRN*	FLW (−) (Front-left wheel sensor, negative)	Detects left-front wheel speed. (Ground level)	No. 2−3 terminals	When the wheel is turned at 1 turn/second: 70 mV or above on digital tester (AC range)
3	GRN/ORN GRN/BLU*	FLW (+) (Front-left wheel sensor, positive)	Detects left-front wheel speed.		
4	GRN	FRW (−) (Front-right wheel sensor, negative)	Detects right-front wheel speed. (Ground level)	No. 2−3 terminals	(Reference) 200 mVP-P or above on oscilloscope
5	GRN/BLK	FRW (+) (Front-right wheel sensor, positive)	Detects right-front wheel speed.		
10	BLK/WHT	R-GND (Rear solenoid valve ground)	Ground for rear inlet and outlet solenoid valves.		
11	BLK/YEL	IG2 (IG2 power source)	Detects ignition switch IG2 signal. (When IG2 is input, +B2 power source is switched to the power source for the ABS control unit (Vcc). Also IG2 monitors P-SW and MCK lines, and drives fail-safe relay.)	ON: 12 V OFF: 0 V	
12	GRN/WHT	STOP (Foot brake)	Detects brake switch signal. (Prevents unnecessary ABS operation when the brake pedal is not depressed)	ON: 12 V OFF: 0 V	
13	LT BLU	RLW (+) (Rear-left wheel sensor, positive)	Detects left-rear wheel speed. (Ground level)	No. 13−14 terminals	When the wheel is turned at 1 turn/second: 70 mV or above on digital tester (AC range)
14	GRY	RLW (−) (Rear-left wheel sensor,negative)	Detects left-rear wheel speed. (Ground level)		
15	GRN/YEL	RRW (+) (Rear-right wheel sensor, positive)	Detects right-rear wheel speed.	No. 15−16 terminals	(Reference) 200 mVP-P or above on oscilloscope
16	BLU/YEL	RRW (−) (Rear-right wheel sensor, negative)	Detects right-rear wheel speed. (Ground level)		
18	BLU/WHT	COM (−) (Common negative)	Ground for ALB checker when it is connected.		
20	BLU/RED	WARN 1 (Warning lamp)	Drives ABS indicator light. (Shuts off the indicator light ground circuit inside the ABS control unit to turn off the light when the system is normal.)	Light ON: 0 V Light OFF: 12 V	
21	YEL/RED	PMR (Pump motor relay)	Drives pump motor relay. (Pump motor relay is turned ON to drive the pump motor when P-SW OFF signal is detected.)	ON: 0 V OFF: 12 V	
22	BLK/WHT	L-GND (Logic ground)	Ground for the ABS control unit control circuits.		

*Sedan

Oscilloscope Waveforms

Solenoid Waveform (Reference)

TRG 0.0div
HOLD

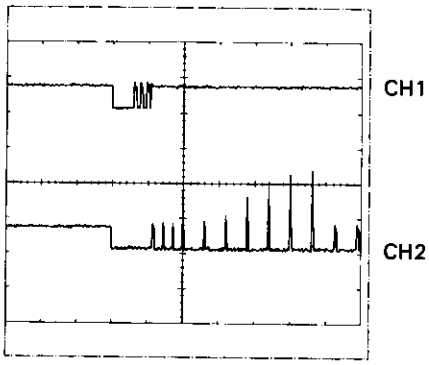

CH1 = 20 V TIME = 0.1s LEADER MODEL
CH2 = 20 V 3040D

Waveform monitored at the ABS control unit conector by running mode 5 (right-front) with the ALB checker.

- CH1: Right-front outlet solenoid valve
- CH2: Right-front inlet solenoid valve
- Working voltage: Battery voltage
- Operation pattern changes according to the conditions (actual driving condition, checker, etc.) and measurement point (rear solenoid).

Wheel Sensor Waveform (Reference)

TRG 0.0div.
HOLD

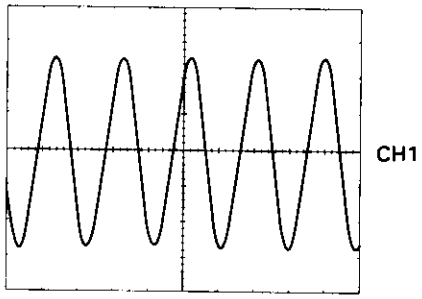

CH1 = 0.1 V TIME = 10ms LEADER MODEL
3040D

Waveform monitored at the ABS control unit (RRW+) connector by turning the right-rear tire approximately 1 turn/second by hand.

- Frequency and amplitude change according to the wheel speed.
- Measurement must be 200 mVP-P or above.

Troubleshooting Precautions

ABS Indicator Light:
The ABS indicator light comes on for three seconds and then goes off when the control unit detects no problem during the initial diagnosis right after the engine starts.
However, the ABS indicator light can stay on for up to 40 seconds when the control unit starts to check for pump over-run, etc. during the initial diagnosis.
The ABS indicator light comes on, and the ABS control unit memorizes the diagnostic trouble code (DTC) under certain conditions.

- The parking brake is applied for more than 30 seconds while the vehicle is being driven. (DTC 2-1)
- The vehicle loses traction, and the front wheels spin for more than 1 minute when starting from a stuck condition on a muddy, snowly, or sandy road. (DTC 4-8).
- The tires adhesion is lost due to excessive cornering speed. (DTC 5, 5-4, 5-8).
- The vehicle is driven on an extremely rough road. (DTC 8-1)
- The vehicle is interfered by strong radio waves (noise), e.g. illegal radio, etc. (DTC 8-2)

NOTE: If there is any trouble in the system, the ABS indicator light turns on during driving.

Diagnostic Trouble Code (DTC):

- When the control unit detects a problem and the ABS indicator light comes on, the control unit memorizes the DTC.
- The control unit has three memory registers. When a problem occurs, the control unit stores the DTC in the first memory register. If another problem occurs, or the same problem occurs again, the control unit moves the first DTC to the next memory register, and stores the second DTC in the first register. If there's a third problem occurrence, the two existing DTCs are moved up one register, and the third DTC is stored in the first register. If problems continue to occur, the oldest problem is moved out of the last register and lost, and the most recent problem is stored in the first register. When the same problem occurs three times, the same DTC is stored in all memory registers.
- The most recent DTC is indicated first, and the oldest DTC is indicated last.
- The DTCs are erased from the control unit when the ABS control unit +B2 power supply or connector is disconnected.
- The control unit's memory can be erased by disconnecting the ABS B2 fuse for more than three seconds.

Self-diagnosis:

- There are three self-diagnosises described below.
  ① Initial diagnosis: Performed right after the engine starts until the ABS indicator light goes off.
  ② Regular diagnosis: Continuously performed (under some conditions) after the ABS indicator light goes off until the engine stops.
  ③ Individual part/system diagnosis: Diagnosis about a specific part/system under its operating conditions.
- The CPU (central processing unit) controls the following when it detects a problem during self-diagnosis:
  ① Turns the ABS indicator light ON.
  ② Turns the front and rear fail-safe relays off.
  ③ Stops the ABS control.
  ④ Stops the ABS pump. (The pump may work under some conditions.)

Kickback and Pump Operation:

- When the engine is started, the ABS control unit begins the initial diagnosis and operates the solenoid valve one time. The kickback is felt when the brake pedal is depressed.
- When the ABS control unit detects the pressure switch OFF signal during the initial diagnosis, it operates the pump motor, and performs the pump motor over-run diagnosis and pump motor diagnosis. Therefore, there are two cases where the pump motor operates or does not operate after the engine is started.
- Normally, after the initial diagnosis, the pump motor operates based on the pressure switch signal, regardless of the vehicle speed.

Troubleshooting:

- When two or three DTCs are stored in the control unit, perform troubleshooting for the DTC that appears first.
- When a customer's reported problem cannot be verified on the car, ask the customer about the conditions when the ABS indicator light came ON, and test drive the car under those conditions, if possible. When the ABS indicator light does not come ON during the test, check for loose terminals and check by shaking the harnesses and connectors while following the flowchart.
- The connector terminal numbers are viewed from the wire side for the female terminals, and from the terminal side for the male terminals.

Diagnostic Trouble Code (DTC) Indication

1. Connect the SCS short connector to the service check connector under the right side of the glove box.

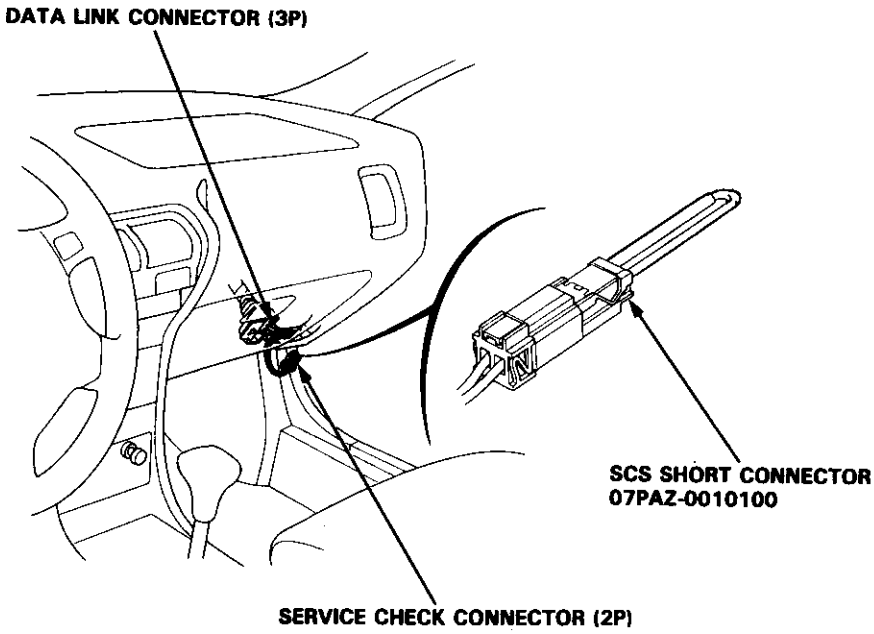

2. Turn the ignition switch ON, but do not start the engine.

3. Record the blinking frequency of the ABS indicator light. The blinking frequency indicates the diagnostic trouble code (DTC).

   NOTE: Check the DTC carefully and record it. The memory of the DTC is erased if the connector is disconnected from the ABS control unit.

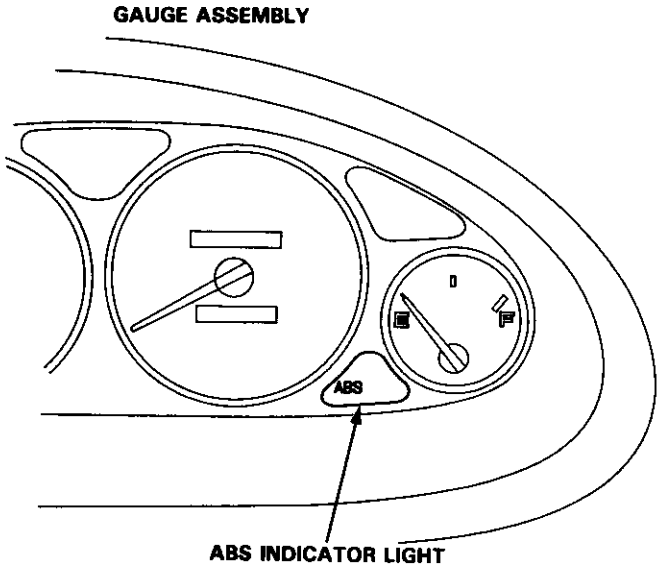

DTC Indication Pattern:

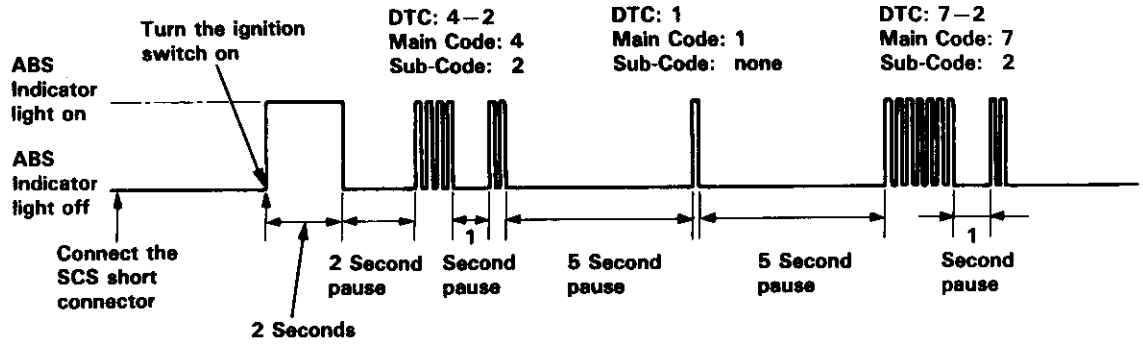

- Turn the ignition switch ON. The ABS indicator light comes on for two seconds to check the bulb.
- The ABS control unit can memorize three DTCs (one, two or three problems).
- If you miscount the blinking frequency or if you recheck the blinking frequency, turn the ignition switch OFF then turn it ON to cycle the ABS indicator light again.

4. Remove the SCS short connector.

   NOTE: The Malfunction Indicator Lamp (MIL) will stay on after the engine is started if the SCS short connector is connected.

5. Remove the ABS B2 (15 A) fuse in the under-hood ABS fuse/relay box for at least three seconds to erase the ABS control unit's memory.

Diagnostic Troubleshooting Code (DTC)

Symptom-to-System Chart

DIAGNOSTIC TROUBLE CODE (DTC) MAIN CODE	DIAGNOSTIC TROUBLE CODE (DTC) SUB-CODE	DIAGNOSIS/ SYMPTOM	DIAGNOSTIC PERIOD: INITIAL DIAGNOSIS	DIAGNOSTIC PERIOD: INDIVIDUAL DIAGNOSIS	DIAGNOSTIC PERIOD: REGULAR DIAGNOSIS	PROBLEM LOCATION	PROBABLE CAUSE
		ABS indicator light does not come on when ignition switch is turned ON					• Blown BACK-UP LIGHT (10 A fuse) • Open circuit between the BACK-UP LIGHT (10 A) fuse and ABS indicator light • Blown ABS indicator light bulb • Open circuit between the ABS indicator light and ABS control unit • Open circuit between the ABS control unit and body ground • Poor body ground • Faulty ABS control unit
		ABS indicator light does not go off after engine is started					• Blown REAR DEFROSTER RELAY/HEATER MOTOR RELAY/COOLING FAN MOTOR RELAY (7.5 A) fuse • Open circuit between the under-dash fuse/relay box and ABS control unit. • Open circuit between the battery and under-hood ABS fuse/relay box • Blown ABS B2 (15 A) fuse • Open circuit inside the under-hood ABS fuse/relay box • Open circuit between the under-hood ABS fuse/relay box and ABS control unit • Faulty alternator • Open circuit between the alternator and ABS control unit • Short to body ground in the WARN circuit between the ABS indicator light and ABS control unit • Faulty ABS control unit
	—	ABS pump motor over-run	○	○			• Pressure switch stuck OFF • Open circuit between the pressure switch and ABS control unit • Open circuit in the P-SW circuit between the pressure switch and body ground, or a poor ground • Drop in pump discharge volume • Leaking modulator unit outlet valve • Leaking relief valve • ABS brake fluid leakage • Faulty ABS control unit
1	2	Pump motor	○		○		• Open circuit or short to body ground between the REAR DEFROSTER RELAY/HEATER MOTOR RELAY/COOLING FAN MOTOR RELAY (7.5 A) fuse and under-hood ABS fuse/relay box • Open circuit or short to body ground in the PMR circuit inside the under-hood ABS fuse/relay box • Faulty pump motor relay • Open circuit or short to body ground in the PMR circuit between the under-hood fuse/relay box and ABS control unit • Open circuit between the battery and under-hood ABS fuse/relay box • Blown ABS MOTOR (40 A) fuse • Blown ABS UNIT (10 A) fuse • Open circuit or short to body ground in the motor drive circuit and MCK circuit inside the under-hood ABS fuse/relay box • Open circuit or short to body ground in the MCK circuit between the under-hood ABS fuse/relay box and ABS control unit • Open circuit or short to body ground between the under-hood ABS fuse/relay box and pump motor • Faulty pump motor • Open circuit between the pump motor and body ground or poor ground • Faulty ABS control unit
	3	High pressure leakage			○		• Leaking outlet valve • Leaking relief valve • Poor contact in pressure switch circuit
	4	Pressure switch	○				• Short to body ground between the ABS control unit and pressure switch • Pressure switch stuck ON • Faulty ABS control unit
	8	High pressure system	○				• Accumulator gas leakage • Changed relief valve set pressure • Rear outlet solenoid valve late to close • Changed pressure switch set pressure
2	1	Parking brake			○		• Driving with the parking brake applied • Low fluid level in the master cylinder reservoir • Blown BACK-UP LIGHT (10 A) fuse • Open circuit between the BACK-UP LIGHT (10 A) fuse and brake system light • Blown brake system light bulb • Open circuit or short to body ground between the brake system light and ABS control unit • Parking brake switch stuck ON • Short to body ground between the brake system light and parking brake switch • Brake fluid level switch stuck ON • Short to body ground between the brake system light and brake fluid level switch • Faulty ABS control unit

PROBABLE CAUSE WHEN SYMPTOM DOES NOT REAPPEAR	DESCRIPTION OF DIAGNOSIS	REFER TO PAGE
		19-62
		19-65
	• The ABS indicator light is turned ON when the pump motor relay ON signal is detected for more than 40 seconds while the ABS is not functioning.	19-71
• Intermittent interruption in the MCK circuit • Intermittent interruption in the pump motor relay drive circuit • Intermittent interruption in the pump motor drive circuit	• The ABS indicator light is turned on when battery voltage is detected at the MCK terminal while the pump motor relay OFF signal is detected. • The ABS indicator light is turned on when the 0 V is detected at the MCK terminal while the pump motor relay ON signal is detected.	19-74
• Intermittent interruption in the pressure switch • Intermittent interruption in the pressure switch circuit	• The ABS indicator light is turned on when the frequent ON/OFF cycle of the pressure switch signal after the engine is started, until it is stopped. The count is erased when the ABS functions.	19-81
	• The ABS indicator light is turned on when the pressure switch ON signal is always detected at every initial diagnosis. The count is erased when the ABS control unit detects the pressure switch OFF signal.	19-83
• The ABS indicator light may not come on in normal climate when it comes on in very cold climate.	• This diagnosis is performed when the pressure switch is OFF at the initial diagnosis. The pump motor is operated to turn the pressure swtch ON, then the solenoid valve is momentarily activated. The ABS indicator light is turned on if the pressure switch signal changes from ON to OFF.	19-85
• Driving with the parking brake applied—(No problem)	• The ABS indicator light is turned on when the parking brake ON signal is detected for more than 30 seconds while driving.	19-87

(cont'd)

Diagnostic Troubleshooting Code (DTC)

Symptom-to-System Chart (cont'd)

DIAGNOSTIC TROUBLE CODE (DTC) MAIN CODE	DIAGNOSTIC TROUBLE CODE (DTC) SUB-CODE	DIAGNOSIS/ SYMPTOM	DIAGNOSTIC PERIOD: INITIAL DIAGNOSIS	DIAGNOSTIC PERIOD: INDIVIDUAL DIAGNOSIS	DIAGNOSTIC PERIOD: REGULAR DIAGNOSIS	PROBLEM LOCATION	PROBABLE CAUSE
3	1	Pulser			○	Right-front	• Chipped pulser gear • Improperly installed wheel sensor
	2					Left-front	
	4					Right-rear	
	8					Left-rear	
	12	Different diameter tire			○		• Different diameter tire installed
4	1	Wheel sensor		○	○	Right-front	• Open circuit, internal short or short to body ground in the wheel sensor • Open circuit or short to body ground in the positive (+) wire between the wheel sensor and ABS control unit • Open circuit or short to body ground in the negative (−) wire between the wheel sensor and ABS control unit • Positive (+) wire shorted to the negative (−) wire between the wheel sensor and ABS control unit • Loose connector or poor contact of terminals • Improper wheel sensor air gap • Faulty ABS control unit • Missing pulser • Modulator does not decrease pressure properly
	2					Left-front	
	4					Right-rear	
	8					Left-rear	
5	—	Rear wheel lock			○	Right/ Left	• Wheel spin during cornering • Open circuit, internal short or short to body ground in the wheel sensor system • Rear brake drag • Modulator does not decrease pressure properly • Faulty ABS control unit
	4					Right	
	8					Left	
6	—	Fail-safe relay	○			Front/ rear	• Short to power in the relay drive circuit between the fail-safe relay and ABS control unit • Faulty relay drive transistor (ON) in the ABS control unit • Fail-safe relay stuck ON • Short to power in the solenoid drive circuits between the fail-safe relay and ABS control unit
	1					Front	
	4					Rear	
7	1	Solenoid	○		○	Right-front	• Fail-safe relay stuck OFF • Open circuit in the solenoid drive circuit between the under-hood ABS fuse/relay box and ABS control unit • Short to body ground in the solenoid drive circuit between the solenoid and ABS control unit • Faulty solenoid drive transistor (ON) in the ABS control unit • Short to power in the solenoid drive circuit between the solenoid and ABS control unit • Faulty solenoid drive transistor (OFF) in the ABS control unit • Short to power in the drive circuit inside the solenoid • Short to the outlet circuit in the inlet circuit between the solenoid and ABS control unit
	2					Left-front	
	4					Rear	
8	1	ABS function			○		• Wheel sensor signal disappears at speeds of 6 mph (10 km/h) or less • Faulty ABS control unit
	2	CPU comparison	○		○		• Faulty ABS control unit
	4	IC [Integrated Circuit]	○		○		• Faulty ABS control unit

PROBABLE CAUSE WHEN SYMPTOM DOES NOT REAPPEAR	DESCRIPTION OF DIAGNOSIS	REFER TO PAGE
• Intermittent interruption in the wheel sensor	• The ABS indicator light is turned on when the wheel sensor signal is periodically missing during driving.	19-92
(•No problem)	• The ABS indicator light may be turned on while driving when one, two or three different diameter tires are installed. This diagnosis is not performed when the parking brake switch is ON.	19-92
• Intermittent interruption in the wheel sensor • Wheel spin of both front wheels (only for DTC 4-4 and 4-8)—(No problem)	• The ABS indicator light is turned on when the wheel sensor signal is missing at speeds of 6 mph (10 km/h) or more. This diagnosis is not performed when the parking brake switch is ON.	19-93 19-98 19-103 19-108
• Intermittent interruption in the wheel sensor • Wheel spin by operating the parking brake while the parking brake switch is stuck OFF • Car spun-out—(No problem)	• The ABS indicator light is turned on when either or both rear wheels lock and the wheel sensor signal is missing during driving. This diagnosis is not performed when the parking brake switch is ON.	19-113
	• The ABS indicator light is turned on when battery voltage is detected at the solenoid terminal before the fail-safe relays are turned on at the initial diagnosis.	19-116 19-119 19-122
• Intermittent interruption in the solenoid valve drive circuit • Intermittent interruption in the solenoid valve ground circuit • Intermittent interruption in the fail-safe relay circuit	• Each solenoid valve is momentarily activated at the initial diagnosis and when the car starts off. The ABS indicator light is turned on when battery voltage is detected at the solenoid terminal. • The ABS indicator light is turned on when 0V is detected at the solenoid terminal while the solenoid OFF signal is detected at the regular diagnosis.	19-125 19-130 19-139
• Intermittent interruption in the wheel sensor • Rough road driving—(No problem)	• The ABS indicator light is turned on when the ABS functions continuously.	19-147
(•No problem)	• The ABS indicator light is turned on when there is a difference between the CPU data.	19-148
(•No problem)	• The ABS indicator light is turned on when there is a abnormality in the IC at the regular diagnosis.	19-148

ABS Indicator Light Does Not Come On

The ABS indicator light does not come on when the ignition switch is turned ON.

When the ignition switch is turned ON, the ABS indicator light drive transistor in the ABS control unit is activated by self-bias and turns the ABS indicator light on.
Possible causes for an ABS indicator light that does not come on:

- Blown BACK-UP LIGHT (10A) fuse
- Open circuit between the BACK-UP LIGHT (10A) fuse and ABS indicator light.
- Blown ABS indicator light bulb
- Open circuit between the ABS indicator light and ABS control unit
- Open circuit between the ABS control unit and body ground
- Poor body ground
- Faulty ABS control unit

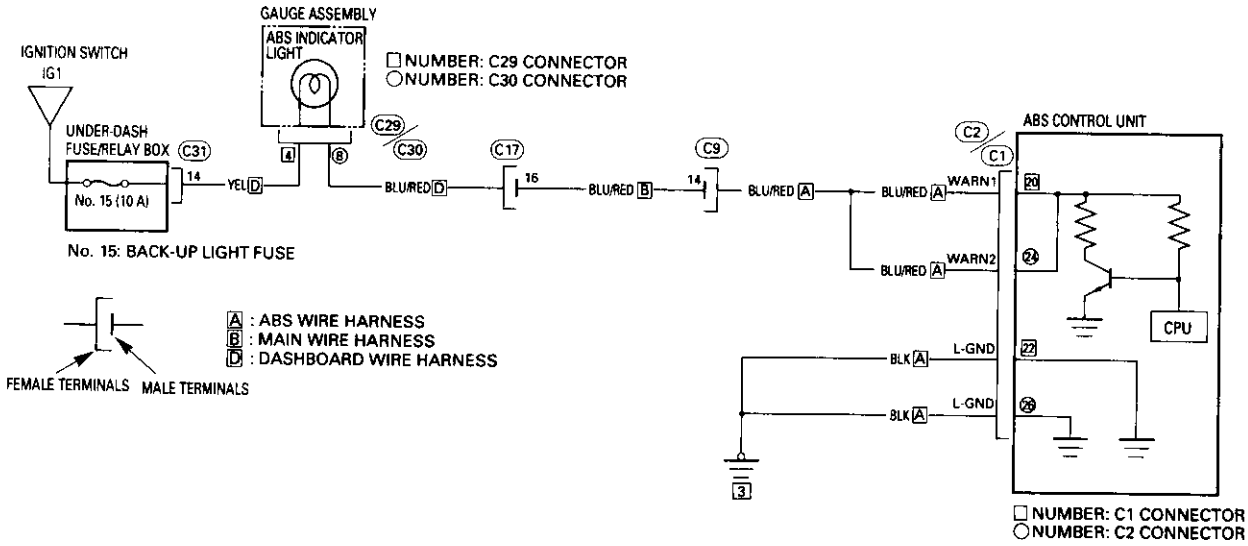

C1 22P ORN

1	2	3	4	5					10	11
12	13	14	15	16		18		**20**	21	**22**

C2 26P ORN

1	2	3		5					10	11	12	13
14	15	16	17		19					**24**	25	**26**

C9 22P ORN

1	2	3	4	5	6	7	8	9	10	11
12	13	**14**	15		17	18	19	20	21	22

C17 16P GRY

1	2	3		4	5	6	7
8	9	10	11	12	13	14	15	**16**

C29 13P GRY

	2		**4**	5	6	7		9		11	12	13

C30 16P GRY

1	2	3	4		6	7	**8**	9	10	11		13	14	15	16

C31 20P GRN

1	2	3	4		5	6	7	8	9
	11	12		**14**	15	16		19	20

3 GROUND

WIRE SIDE OF FEMALE TERMINALS

The ABS indicator light does not come on when the ignition switch is turned ON.

Check the BACK-UP LIGHT (10A) fuse in the under-dash fuse/relay box.

NOTE: All indicator lights except the charging system indicator light will not come on when the BACK-UP LIGHT (10A) fuse in blown.

Is the fuse OK?

NO → **Replace the fuse and recheck.**

NOTE: Reinstall the fuse if it is OK.

YES

Disconnect the gauge assembly 13P connector.

Turn the ignition switch ON.

Measure the voltage between the gauge assembly 13P connector No. 4 (YEL) terminal and body ground.

Is there battery voltage?

NO →
- **Repair open in the YEL wire between the BACK-UP LIGHT *(10A) fuse and gauge assembly.***
- **Replace the under-dash fuse/relay box. (Open circuit inside the fuse/relay box)**

YES

Check the ABS indicator light bulb in the gauge assembly.

Is the bulb OK?

NO → **Replace the ABS indicator light bulb.**

YES

Connect the gauge assembly 13P connector.

Short the gauge assembly 16P connector No. 8 (BLU/RED) terminal to body ground.

Does the ABS indicator light come on?

NO → **Replace the printed circuit board in the gauge assembly.**

YES

(To page 19-64)

GAUGE ASSEMBLY 13P CONNECTOR

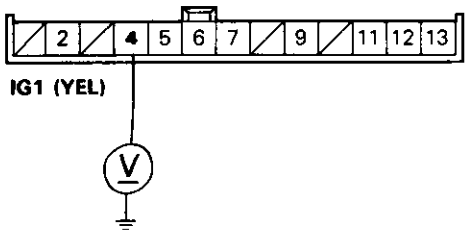

WIRE SIDE OF FEMALE TERMINALS

GAUGE ASSEMBLY 16P CONNECTOR

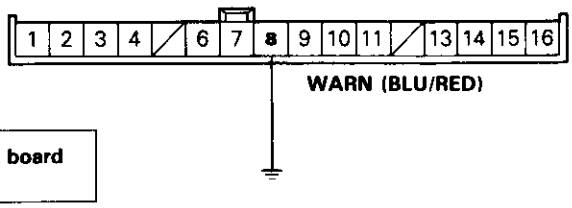

WIRE SIDE OF FEMALE TERMINALS

(cont'd)

ABS Indicator Light Does Not Come On (cont'd)

(From page 19-63)

Turn the ignition switch OFF.

Disconnect the ABS control unit 22P and 26P connectors.

Turn the ignition switch ON.

Short the ABS control unit 22P connector No. 20 (BLU/RED) terminal or 26P connector No. 24 (BLU/RED) terminal to body ground.

Does the ABS indicator light come on?

- NO → **Repair open in the BLU/RED wire between the gauge assembly and ABS control unit.**
- YES ↓

Connect the ABS control unit 22P and 26P connectors.

Short the ABS control unit 22P connector No. 22 (BLK) terminal or 26P connector No. 26 (BLK) terminal to body ground.

Does the ABS indicator light come on?

- YES → **• Repair open in the two BLK wires between the ABS control unit and body ground.**
  • Repair poor ground [3].
- NO ↓

Check for loose ABS control unit connectors. If necessary, substitute a known-good ABS control unit and recheck.

ABS CONTROL UNIT 22P CONNECTOR

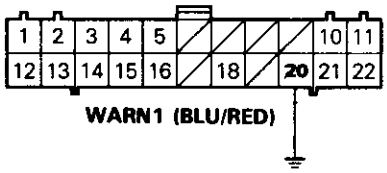

ABS CONTROL UNIT 26P CONNECTOR

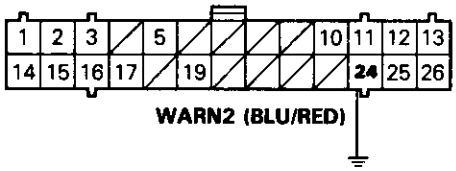

WIRE SIDE OF FEMALE TERMINALS

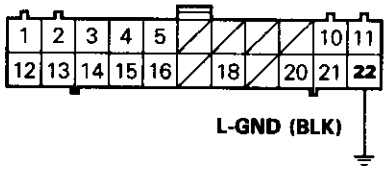

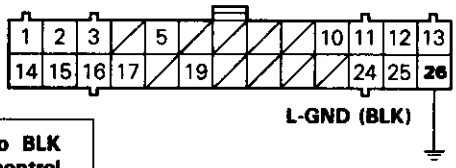

ABS Indicator Light Does Not Go Off

The ABS indicator light does not go off after the engine is started

When no problem is found during the initial diagnosis, the ABS control unit turns the ABS indicator light drive transistor off to turn the ABS indicator light off.

Possible causes for an ABS indicator light that does not go off, but no Diagnostic Trouble Code (DTC) is indicated:

- Blown REAR DEFROSTER RELAY/HEATER MOTOR RELAY/COOLING FAN MOTOR RELAY (7.5A) fuse
- Open circuit between the under-dash fuse/relay box and ABS control unit
- Open circuit between the battery and under-hood ABS fuse/relay box
- Blown ABS B2 (15A) fuse
- Open circuit inside the under-hood ABS fuse/relay box
- Open circuit between the under-hood ABS fuse/relay box and ABS control unit
- Faulty alternator
- Open circuit between the alternator and ABS control unit
- Short to body ground in the WARN circuit between the ABS indicator light and ABS control unit
- Faulty ABS control unit

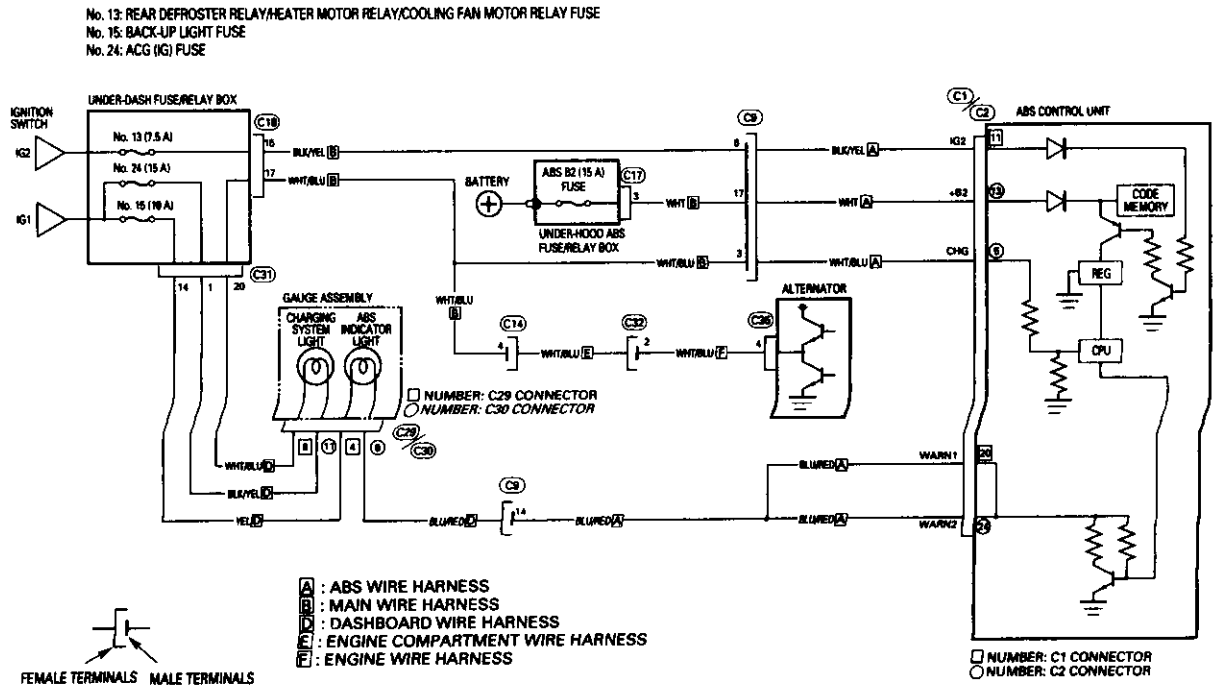

C1 22P ORN

1	2	3	4	5					10	**11**
12	13	14	15	16		18		**20**	21	22

C18 22P GRN

1	2	3	4				6	7		9	10
11		13	14	**15**	16	**17**	18			21	22

C31 20P GRN

1	2	3	4		5	6		8	9
	11	12	13	**14**	15	16		18	19	**20**

C2 26P ORN

1	2	3		**5**					10	11	12	**13**
14	15	16	17		19					**24**	25	26

C24 4P ORN

	2	**3**	4

C32 14P GRY

	1	**2**	3
4	5	6	7
8	9	10	11
12	13	14	

C35 4P GRY

1	2
3	**4**

C9 22P ORN

1	2	**3**	4	5		**6**	7	8	9	10	11
12	13	**14**	15			**17**	18	19	20	21	22

C29 13P GRY

	2		**4**	5	6	7		**9**		11	12	13

C14 20P GRY

1	2	3	**4**	5		6	7	8	9	10
11	12	13	14	15		16	17	18	19	20

C30 16P GRY

1	2	3	4		6	7	**8**	9	10	**11**		13	14	15	16

WIRE SIDE OF FEMALE TERMINALS

(cont'd)

ABS Indicator Light Does Not Go Off (cont'd)

– With engine running, ABS indicator light is ON.
– With the SCS short connector connected (see page 19-56), no DTC is indicated.

Start the engine and check the charging system indicator light.

Does it go off?
- NO → **Check the charging system (see section 23).**
- YES ↓

Stop the engine.

Check the REAR DEFROSTER RELAY/HEATER MOTOR RELAY/COOLING FAN MOTOR RELAY (7.5A) fuse in the under-dash fuse/relay box.

NOTE: The IG2 power source is checked in this step.

Is the fuse OK?
- NO → **Replace the fuse and recheck.**
- YES ↓

Check the ABS B2 (15A) fuse in the under-hood ABS fuse/relay box.

UNDER-HOOD ABS FUSE/RELAY BOX

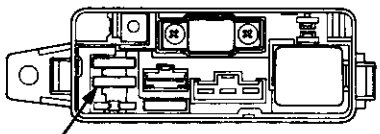

ABS B2 (15A) FUSE

Is the fuse OK?
- YES → (To page 19-69)
- NO ↓

NOTE: Reinstall the fuse if it is OK.

Measure the voltage between the ABS B2 fuse terminals on the under-hood ABS fuse/relay box.

BATTERY TERMINAL (+)

REAR FAIL-SAFE RELAY TERMINAL (–)

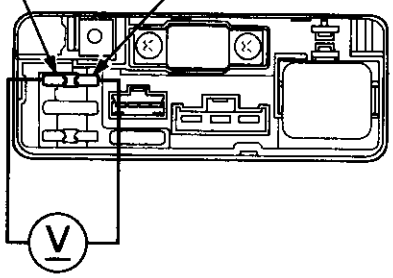

Is there battery voltage?
- NO → (To page 19-68)
- YES ↓

(To page19-67)

(From page 19-66)

Disconnect the under-hood ABS fuse/relay box 4P connector.

Measure the voltage between the ABS B2 fuse terminals on the under-hood ABS fuse/relay box.

Is there battery voltage?

NO → **Repair short to body ground in the WHT wire between the under-hood ABS fuse/relay box, rear fail-safe relay and ABS control unit.**

YES → **Replace the under-hood ABS fuse/relay box. (Short to body ground in the fuse box.)**

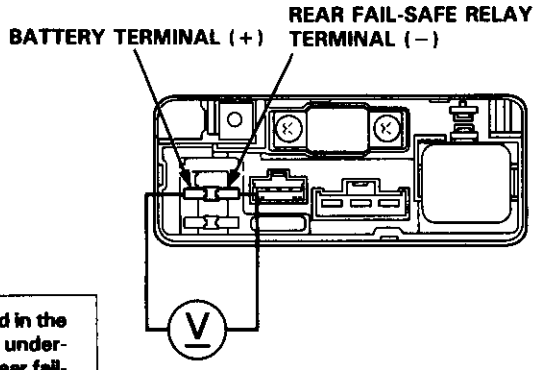

(cont'd)

ABS Indicator Light Does Not Go Off (cont'd)

(From page 19-66)

Disconnect the modulator unit 14P connector.

Install a new ABS B2 (15A) fuse in the under-hood ABS fuse/relay box.

Disconnect the rear fail-safe relay connector.

Wire colors of the rear fail-safe relay connector: WHT, BLU/BLK, YEL/GRN, BLK

REAR FAIL-SAFE RELAY CONNECTOR

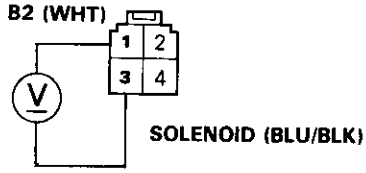

WIRE SIDE OF FEMALE TERMINALS

Measure the voltage between the rear fail-safe relay connector No. 1 (WHT) (+) and No. 3 (BLU/BLK) (−) terminals.

Is there battery voltage?

YES → **Repair short to body ground in the BLU/BLK wire between the rear fail-safe relay and modulator unit.**

NO

Check for continuity between the following terminals of the modulator unit 14P connector and body ground.
- No. 6 (GRY/WHT): Rear outlet +B
- No. 9 (WHT): Rear inlet +B

MODULATOR UNIT 14P CONNECTOR (MODULATOR UNIT SIDE)

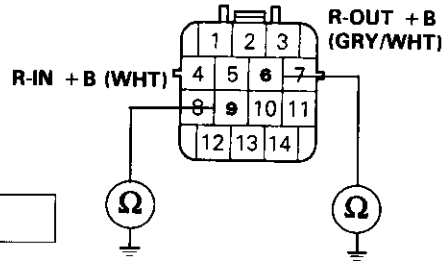

WIRE SIDE OF FEMALE TERMINALS

Is there continuity?

YES → **Replace the modulator unit.**

NO

Connect the modulator unit 14P connector and rear fail-safe relay connector, and recheck.

(From page 19-66)

Measure the voltage between the under-hood ABS fuse/relay box +B terminal and body ground.

NOTE: The +B2 line is checked from this step.

Is there battery voltage?

- NO → **Repair open in the BLK wire between the battery and under-hood ABS fuse/relay box.**
- YES ↓

Measure the voltage between the under-hood ABS fuse/relay box 4P connector No. 3 (WHT) terminal and body ground.

Is there battery voltage?

- NO → **Replace the under-hood ABS fuse/relay box.**
- YES ↓

Disconnect the ABS control unit 22P and 26P connectors.

Measure the voltage between the ABS control unit 26P connector No. 13 (WHT) terminal and body ground.

Is there battery voltage?

- NO → **Repair open in the WHT wire between the under-hood ABS fuse/relay box and ABS control unit.**
- YES ↓

Turn the ignition switch ON.

NOTE: The WARN line is checked in this step with the ABS control unit connectors disconnected.

Does the ABS indicator light come on?

- YES → **Repair short to body ground in the BLU/RED wire between the ABS indicator light and ABS control unit.**
- NO ↓

(To page 19-70)

UNDER-HOOD ABS FUSE/RELAY BOX

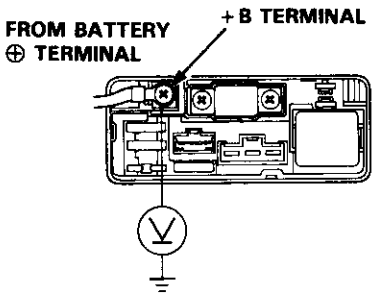

UNDER-HOOD ABS FUSE/RELAY BOX 4P CONNECTOR

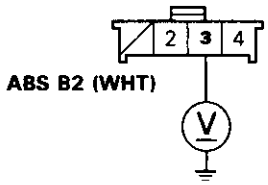

WIRE SIDE OF FEMALE TERMINALS

ABS CONTROL UNIT 26P CONNECTOR

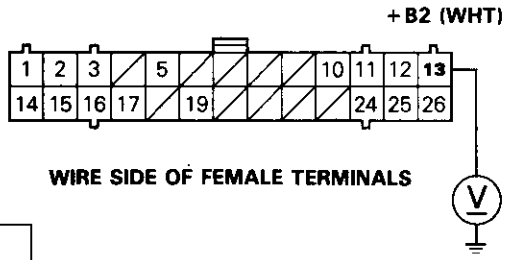

WIRE SIDE OF FEMALE TERMINALS

(cont'd)

ABS Indicator Light Does Not Go Off (cont'd)

(From page 19-69)

Measure the voltage between the ABS control unit 22P connector No. 11 (BLK/YEL) terminal and body ground.

NOTE: The IG2 line is checked in this step.

Is there battery voltage?

NO → **Repair open in the BLK/YEL wire between the REAR DEFROSTER RELAY/HEATER MOTOR RELAY/COOLING FAN MOTOR RELAY (7.5A) fuse in the under-dash fuse/relay box and ABS control unit.**

YES

Start the engine.

Measure the voltage between the ABS control unit 26P connector No. 5 (WHT/BLU) terminal and body ground.

NOTE: The CHG line is checked in this step.

Is there battery voltage?

NO → **Repair open in the WHT/BLU wire between the alternator and ABS control unit.**

YES

Check for loose ABS control unit connectors. If necessary, substitute a known-good ABS control unit and recheck.

ABS CONTROL UNIT 22P CONNECTOR

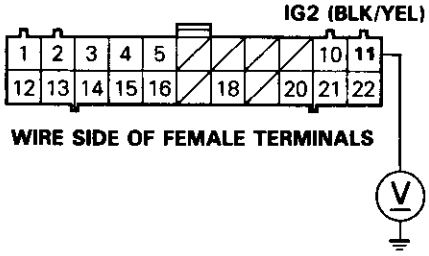

ABS CONTROL UNIT 26P CONNECTOR

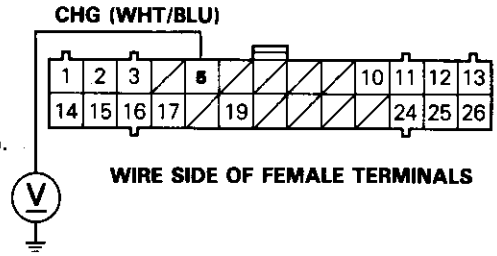

ABS Pump Motor Over-run

Diagnostic Trouble Code (DTC) 1: ABS Pump Motor Over-run

NOTE: The ABS indicator light comes on twice; once for two seconds during the bulb check, then again, indicating DTC 1.

The ABS control unit monitors the pump motor relay drive signal during the initial diagnosis and individual diagnosis when the ABS is not functioning.
When the ABS control unit detects the drive signal for 40 seconds, it turns the pump motor relay off and keeps the ABS indicator light on. When the ABS control unit detects the drive signal for 40 seconds after the ABS indicator light went off, the control unit turns the ABS indicator light on again.
Possible causes:

- Pressure switch stuck OFF
- Open circuit between the pressure switch and ABS control unit
- Open circuit in the P-SW circuit between the pressure switch and body ground, or a poor ground
- Drop in pump discharge volume
- Leaking outlet valve
- Leaking relief valve
- ABS brake fluid leakage
- Faulty ABS control unit

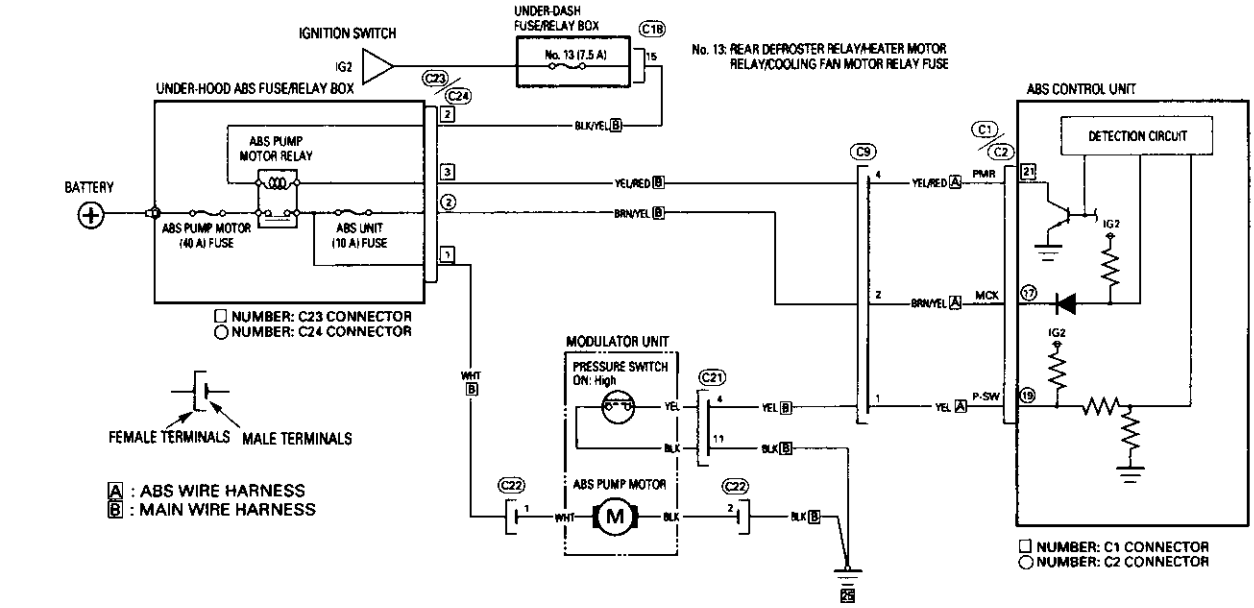

C1 22P ORN

1	2	3	4	5					10	11
12	13	14	15	16		18		20	**21**	22

C18 22P GRN

1	2	3	4			6	7		9	10
11	12	13	14	**15**	16	17	18	19	21	22

C21 14P ORN

	1	2	3
4	5	6	7
8	9	10	**11**
	12	13	14

C2 26P ORN

1	2	3		5					10	11	12	13
14	15	16	**17**		**19**					24	25	26

C22 2P ORN

1	**2**

TERMINAL SIDE OF MALE TERMINALS

C9 22P ORN

1	**2**	3	**4**	5	6	7	8	9	10	11
12	13	14	15		17	18	19	20	21	22

C23 3P ORN

1	**2**	**3**

C24 4P ORN

	2	3	4

25 GROUND

WIRE SIDE OF FEMALE TERMINALS

ABS Pump Motor Over-run (cont'd)

- **With engine running, ABS indicator light is ON.**
- **With the SCS short connector connected (see page 19-56), DTC 1 is indicated.**

Start the engine and let it run for 1 minute.

Does the pump motor run for 40 seconds and does the ABS indicator light come on?

NO → **The vehicle is OK at this time.**

YES

Check the reservoir fluid level.

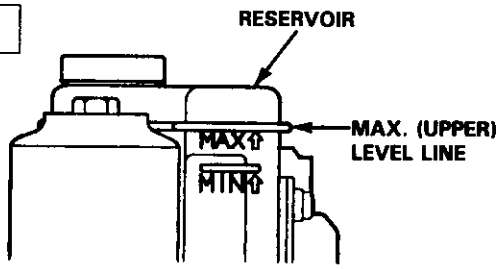

Is the level OK?

NO → **Replace the modulator unit. (Brake fluid leakage)**

YES

Stop the engine.

Disconnect the modulator unit 14P connector.

Check for continuity between the modulator unit 14P connector No. 4 (YEL) and No. 11 (BLK) terminals.

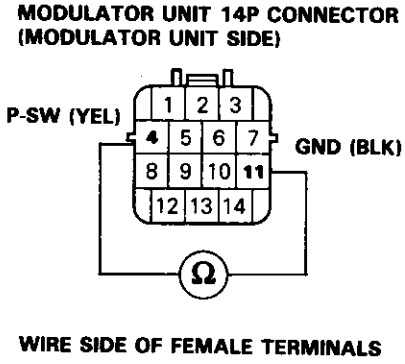

Is there continuity?

NO → **Replace the modulator unit.**
- **Pressure switch stuck OFF**
- **Drop in pump discharge volume**
- **Leaking outlet valve**
- **Leaking releif valve**

YES

Turn the ignition switch ON.

(To page 19-73)

(From page 19-72)

Measure the voltage between the modulator unit 14P connector No. 4 (YEL) terminal and body ground.

Is there battery voltage?

YES → **Repair open in the BLK wire between the pressure switch and body ground, or poor ground.**

NO ↓

Measure the voltage between the ABS control unit 26P connector No. 19 (YEL) terminal and body ground.

Is there battery voltage?

YES → **Repair open in YEL wire between the pressure switch and ABS control unit.**

NO ↓

Check for loose ABS control unit connectors. If necessary, substitute a known-good ABS control unit and recheck.

MODULATOR UNIT 14P CONNECTOR (ABS CONTROL UNIT SIDE)

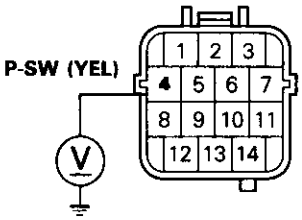

TERMINAL SIDE OF MALE TERMINALS

ABS CONTROL UNIT 26P CONNECTOR

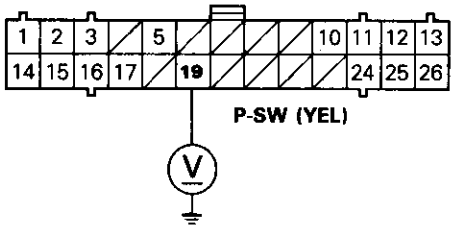

WIRE SIDE OF FEMALE TERMINALS

ABS Pump Motor

Diagnostic Trouble Code (DTC) 1-2: ABS Pump Motor Diagnosis

The ABS control unit checks the conditions at the pump motor relay drive (PMR) terminal and motor check (MCK) terminal during the initial diagnosis and regular diagnosis.
When the ABS control unit detects the following conditions during the diagnosis, it keeps the ABS indicator light on. When the following conditions are detected after the ABS indicator light goes off, the ABS control unit turns the ABS indicator light on again.

- Battery voltage at the MCK terminal with an OFF signal at the PMR terminal.
- 0 V at the MCK terminal with an ON signal at the PMR terminal.

Possible causes:

- Open circuit or short to body ground between the REAR DEFROSTER RELAY/HEATER MOTOR RELAY/COOLING FAN MOTOR RELAY (7.5A) fuse and under-hood ABS fuse/relay box
- Open circuit or short to body ground in the PMR circuit inside the under-hood ABS fuse/relay box.
- Faulty pump motor relay
- Open circuit or short to body ground in the PMR circuit between the under-hood ABS fuse/relay box and ABS control unit.
- Open circuit between the battery and under-hood ABS fuse/relay box
- Blown ABS MOTOR (40A) fuse
- Blown ABS UNIT (10A) fuse
- Open circuit or short to body ground in the motor drive circuit and MCK circuit inside the under-hood ABS fuse/relay box.
- Open circuit or short to body ground in the MCK circuit between the under-hood ABS fuse/relay box and ABS control unit
- Open circuit or short to body ground between the under-hood ABS fuse/relay box and pump motor
- Faulty pump motor
- Open circuit between the pump motor and body ground or poor ground
- Faulty ABS control unit

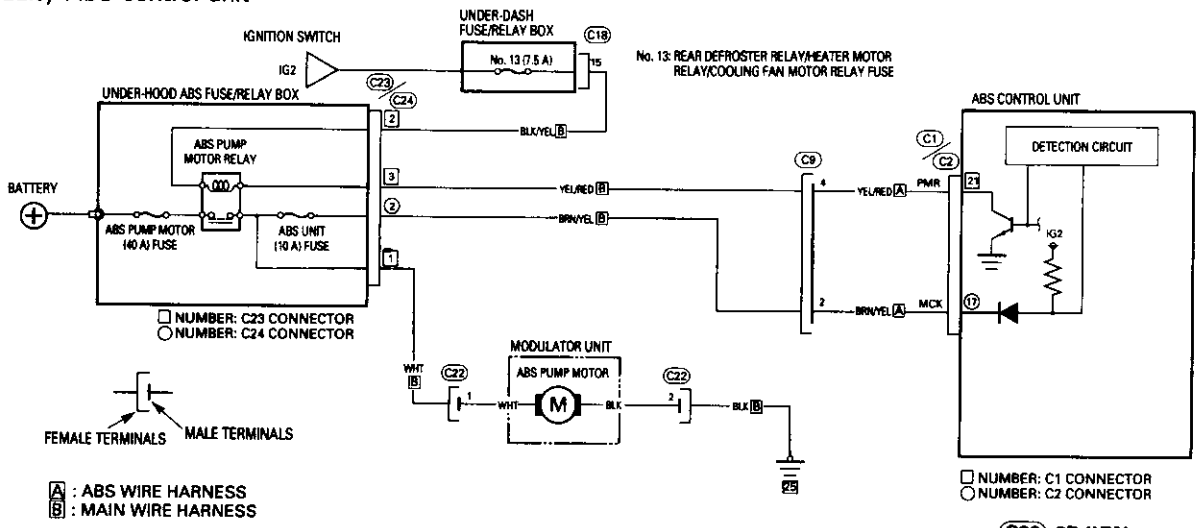

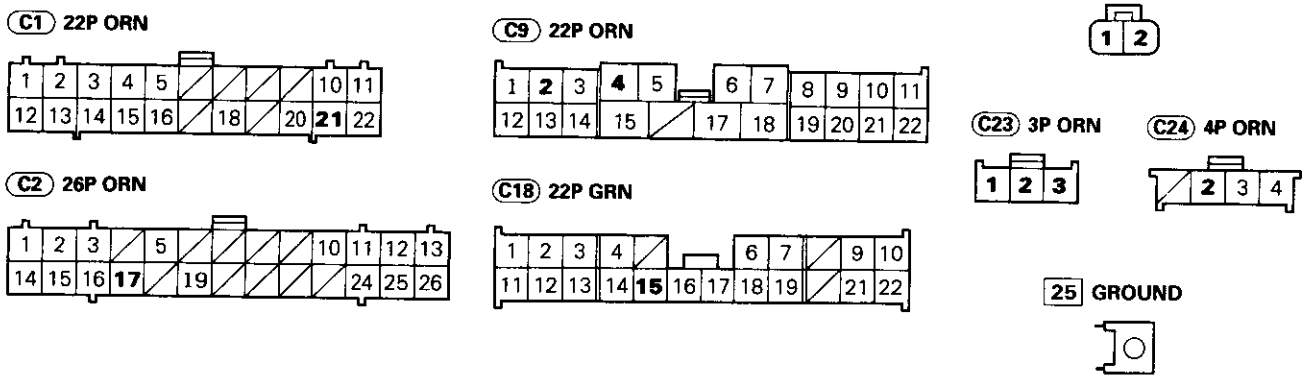

WIRE SIDE OF FEMALE TERMINALS

- **With engine running, ABS indicator light is ON.**
- **With the SCS short connector connected (see page 19-56), DTC 1-2 is indicated.**

Check the ABS MOTOR (40A) fuse in the under-hood ABS fuse/relay box.

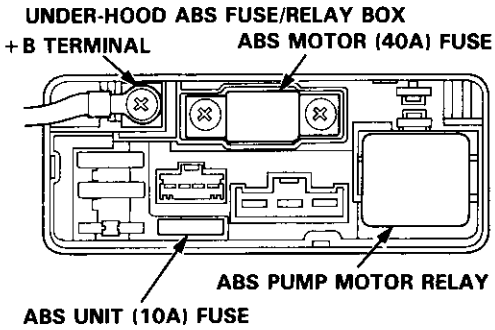

Is the fuse OK?

- NO → **Replace the fuse and recheck.**
- YES ↓

Check the ABS UNIT (10A) fuse in the under-hood ABS fuse/relay box.

Is the fuse OK?

- NO → **Replace the fuse and recheck.**
- YES ↓

NOTE: Reinstall the fuse if it is OK.

Remove the ABS pump motor relay and check it (see page 19-157).

Is the relay OK?

- NO → **Replace the ABS pump motor relay.**
- YES ↓

NOTE: If the relay is stuck ON, check the pump motor operation.

Bleed high pressure fluid from the modulator unit bleed screw (see page 19-152).

Connect the ABS pump motor relay connector +B and MOTOR terminals with a jumper wire for 1 second.

NOTE: Use a jumper wire with a diameter larger than 2mm (0.08 in).

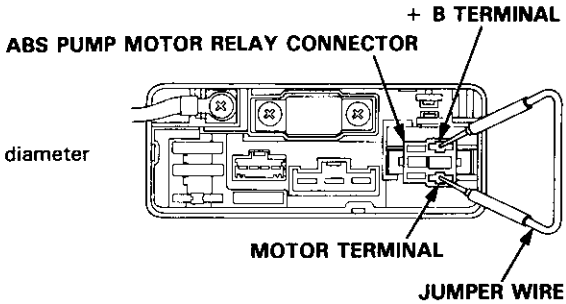

Does the pump motor run?

- NO → (To page 19-78) To pump motor drive line check
- YES ↓

Remove the jumper wire.

(To page 19-76)

(cont'd)

ABS Pump Motor (cont'd)

(From page 19-75)

Disconnect the under-hood ABS fuse/relay box 3P connector.

Turn the ignition switch ON.

Measure the voltage between the ABS pump motor relay connector MOTOR terminal and body ground.

UNDER-HOOD ABS FUSE/RELAY BOX

ABS PUMP MOTOR RELAY CONNECTOR

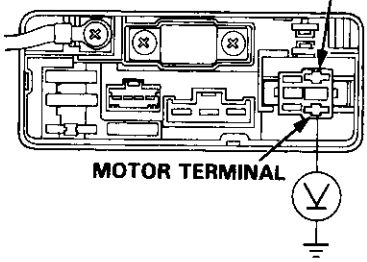

Is there battery voltage?

- NO → (To page 19-79) To motor check (MCK) circuit check
- YES ↓

Measure the voltage between the under-hood ABS fuse/relay box 3P connector No. 2 (BLK/YEL) terminal and body ground.

NOTE: The ABS pump motor relay coil circuit is checked beginning with this step.

UNDER-HOOD ABS FUSE/RELAY BOX 3P CONNECTOR

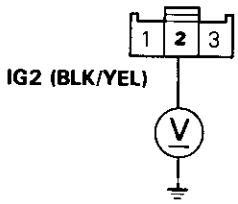

WIRE SIDE OF FEMALE TERMINALS

Is there battery voltage?

- NO → **Repair open in the BLK/YEL wire between the REAR DEFROSTER RELAY/HEATER MOTOR RELAY/COOLING FAN MOTOR RELAY (7.5A) fuse in the under-dash fuse/relay box and the under-hood ABS fuse/relay box.**
- YES ↓

Connect the under-hood ABS fuse/relay box 3P connector.

Install the ABS pump motor relay.

Does the ABS pump motor relay operate

- YES → (To page 19-80) To short to body ground check of the ABS pump motor relay coil circuit
- NO ↓

Measure the voltage between the under-hood ABS fuse/relay box 3P connector No. 3 (YEL/RED) terminal and body ground.

NOTE: Open circuit in the ABS pump motor relay coil circuit is checked beginning with this step.

UNDER-HOOD ABS FUSE/RELAY BOX 3P CONNECTOR

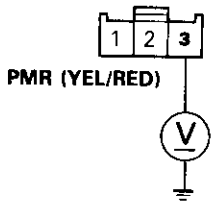

WIRE SIDE OF FEMALE TERMINALS

Is there battery voltage?

- NO → **Replace the under-hood ABS fuse/relay box. (Open circuit inside the box)**
- YES ↓

(To page 19-77)

(From page 19-76)

Measure the voltage between the ABS control unit 22P connector No. 21 (YEL/RED) terminal and body ground.

Is there battery voltage?

NO → **Repair open in the YEL/RED wire between the under-hood ABS fuse/relay box and ABS control unit.**

YES → **Reconnect the connectors properly, bleed high pressure fluid and start the engine. If DTC 2-1 is stored again, replace the ABS control unit.**

NOTE: Add the brake fluid if the fluid level is lower than the MINI line.

ABS CONTROL UNIT 22P CONNECTOR

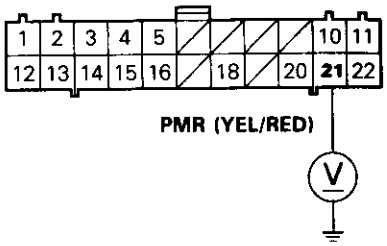

WIRE SIDE OF FEMALE TERMINALS

(cont'd)

ABS Pump Motor (cont'd)

(From page 19-75)

Measure the voltage between the under-hood ABS fuse/relay box battery +B terminal and body ground.

NOTE: The ABS pump motor drive circuit is checked beginning with this step.

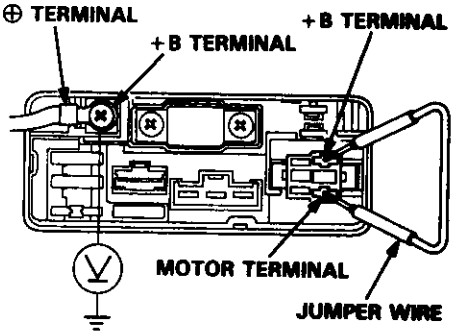

Is there battery voltage?

- NO → **Repair open in the WHT wire between the battery and under-hood ABS fuse/relay box.**
- YES ↓

Measure the voltage between the under-hood ABS fuse/relay box 3P connector No. 1 (WHT) terminal and body ground.

NOTE: Connect the ABS pump motor relay connector +B and MOTOR terminals with a jumper wire.

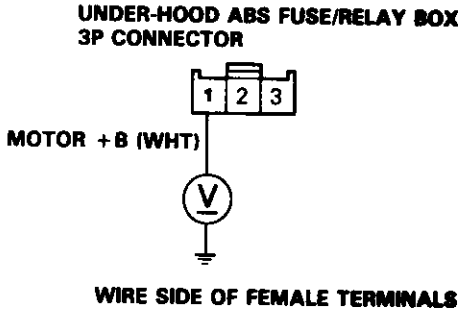

Is there battery voltage?

- NO → **Replace the under-hood ABS fuse/relay box.**
- YES ↓

Disconnect the ABS pump motor 2P connector.

Measure the voltage between the ABS pump motor 2P connector No. 1 (WHT) terminal and body ground.

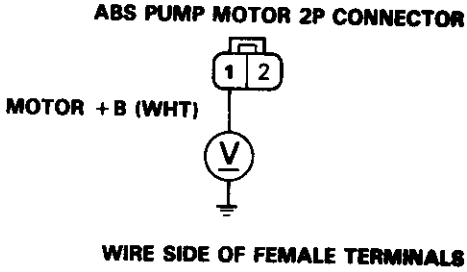

Is there battery voltage?

- NO → **Repair open in the WHT wire between the under-hood ABS fuse/relay box and ABS pump motor.**
- YES ↓

Measure the voltage between the ABS pump motor 2P connector No. 1 (WHT) and No. 2 (BLK) terminals.

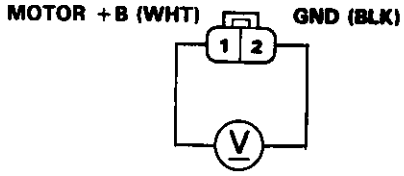

Is there battery voltage?

- NO → **• Repair open in the BLK wire between the ABS pump motor and body ground.**
  • Repair poor ground 25.
- YES ↓

Replace the ABS pump motor.

(From page 19-76)

Disconnect the under-hood ABS fuse/relay box 4P connector.

NOTE: The motor check (MCK) circuit is checked beginning with this step.

Measure the voltage between the under-hood ABS fuse/relay box 4P connector No. 2 (BRN/YEL) terminal and body ground.

Is there battery voltage?

YES → **Replace the under-hood ABS fuse/relay box. (Open circuit inside the box)**

NO

Measure the voltage between the ABS control unit 26P connector No. 17 (BRN/YEL) terminal and body ground.

Is there battery voltage?

YES → **Repair open in the BRN/YEL wire between the under-hood ABS fuse/relay box and ABS control unit.**

NO

Turn the ignition switch OFF.

Disconnect the ABS control unit 26P connector.

Check for continuity between the ABS control unit 26P connector No. 17 (BRN/YEL) terminal and body ground.

Is there continuity?

YES → **Repair short to body ground in the BRN/YEL wire between the under-hood ABS fuse/relay box and ABS control unit.**

NO

Check for loose ABS control unit connectors. If necessary, substitute a known-good ABS control unit and recheck.

UNDER-HOOD ABS FUSE/RELAY BOX 4P CONNECTOR

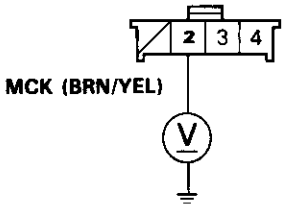

WIRE SIDE OF FEMALE TERMINALS

ABS CONTROL UNIT 26P CONNECTOR

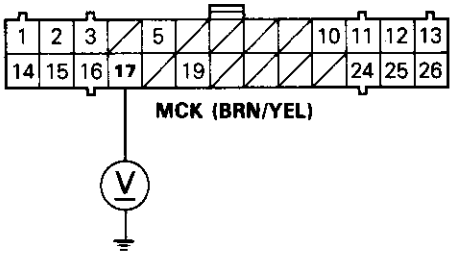

WIRE SIDE OF FEMALE TERMINALS

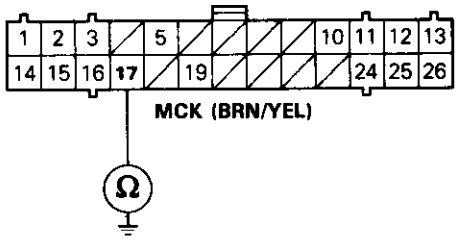

(cont'd)

ABS Pump Motor (cont'd)

(From page 19-76)

Remove the ABS pump motor relay.

NOTE:
- Short to body ground in the ABS pump motor relay coil circuit is checked beginning with this step.
- If the motor relay coil is shorted to body ground, the motor may be damaged. Check the pump motor operation.

Disconnect the under-hood ABS fuse/relay box 3P connector.

Check for continuity between the ABS pump motor relay connector PMR terminal and body ground.

Is there continuity?

YES → **Replace the under-hood ABS fuse/relay box. (Short circuit inside the box)**

NO

Disconnect the ABS control unit 22P connector.

Check for continuity between the ABS control unit 22P connector No. 21 (YEL/RED) terminal and body ground.

Is there continuity?

YES → **Repair short to body ground in the YEL/RED wire between the under-hood ABS fuse/relay box and ABS control unit.**

NO

Check for loose ABS control unit connectors. If necessary, substitute a known-good ABS control unit and recheck.

UNDER-HOOD ABS FUSE/RELAY BOX

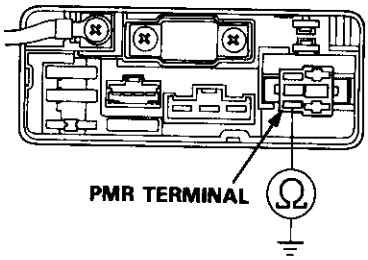

ABS CONTROL UNIT 22P CONNECTOR

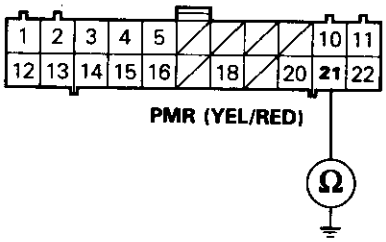

WIRE SIDE OF FEMALE TERMINALS

High Pressure Leakage

Diagnostic Trouble Code (DTC) 1-3: High Pressure Leakage Diagnosis

The ABS control unit counts the number of times that the ABS pump motor operates and stops during regular diagnosis. When the ABS pump motor repeatedly operates and stops, the ABS control unit determines that the high pressure system is leaking and turns the ABS indicator light on.
This count is reset when the ABS functions.
Possible causes:

- Leaking outlet valve
- Leaking relief valve
- Poor contact in pressure switch circuit

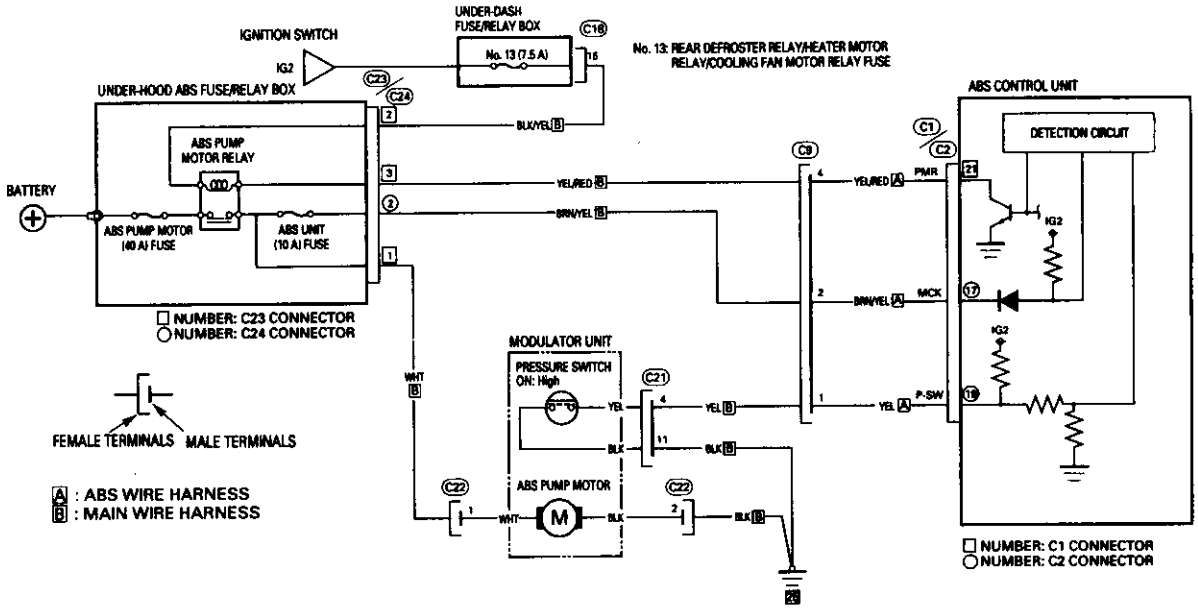

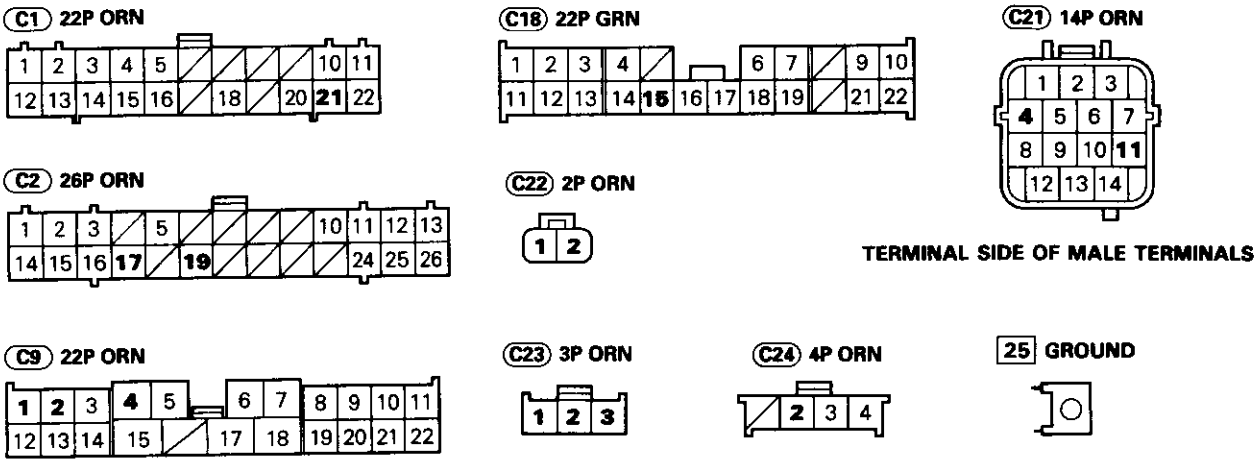

(cont'd)

High Pressure Leakage (cont'd)

– With engine running, ABS indicator light is ON.
– With the SCS short connector connected (see page 19-56), DTC 1-3 is indicated.

Check the modulator unit for brake fluid leakage.

Is there leakage?

YES → **Tighten the modulator unit fitting or replace the modulator unit if it cannot be repaired.**

NO

Start the engine.

Does the ABS pump motor operate?

YES → Stop the engine after the ABS pump motor stops and wait for 30 minutes.

NOTE: This step lets the accumulator gas cool.

Restart the engine.

Does the ABS pump motor operate?

YES → Wait until the ABS pump motor stops.

NO

NO

Stop the engine.

Disconnect the modulator unit 14P connector.

After 30 minutes, check for continuity between the modulator unit No. 4 (YEL) and No. 11 (BLK) terminals.

Is there continuity?

NO → **Replace the mudulator unit.**
- **Leaking outlet valve**
- **Leaking relief valve**

YES

Intermittent failure, system is OK at this time.
Check for loose connectors and terminals in the pressure switch circuit.

MODULATOR UNIT 14P CONNECTOR (MODULATOR UNIT SIDE)

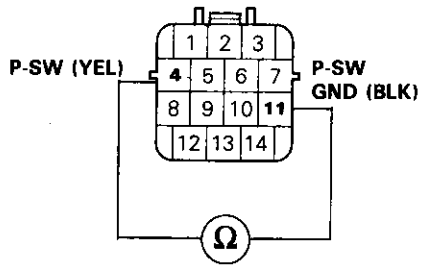

WIRE SIDE OF FEMALE TERMINALS

Pressure Switch

Diagnostic Trouble Code (DTC) 1-4: Pressure Switch Diagnosis

The ABS control unit momentarily activates the outlet solenoid valve and counts the number of times that the pressure switch signal is ON during the initial diagnosis.
When the ABS control unit does not detect the pressure switch OFF signal at all when the engine is started and stopped repeatedly, it keeps the ABS indicator light on. The count of the pressure switch ON signals is reset when the ABS control unit detects the pressure switch OFF signal.
Possible causes:

- Short to body ground between the ABS control unit and pressure switch
- Pressure switch stuck ON
- Faulty ABS control unit

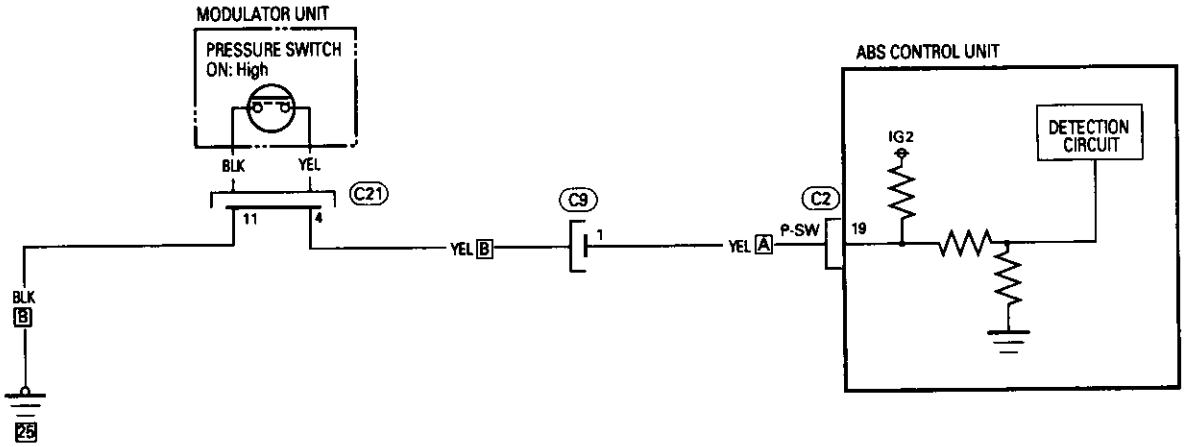

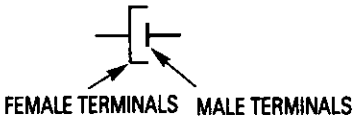

A : ABS WIRE HARNESS
B : MAIN WIRE HARNESS

C2 26P ORN

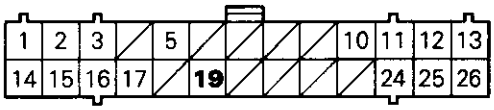

C21 14P ORN

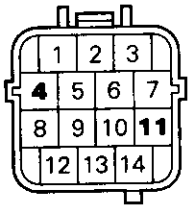

TERMINAL SIDE OF MALE TERMINALS

C9 22P ORN

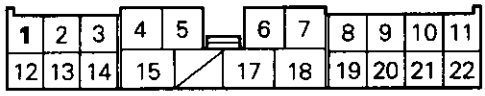

WIRE SIDE OF FEMALE TERMINALS

25 GROUND

(cont'd)

Pressure Switch (cont'd)

– With engine running, ABS indicator light is ON.
– With the SCS short connector connected (see page 19-56), DTC 1-4 is indicated.

Bleed the high pressure brake fluid from the modulator unit (see page 19-152).

Disconnect the modulator unit 14P connector.

Check for continuity between the modulator unit 14P connector No. 4 (YEL) and No. 11 (BLK) terminals.

Is there continuity?

YES → **Visually inspect the modulator wire harness. If the harness is OK, replace the modulator unit. (Pressure switch stuck ON)**

NO

Disconnect the ABS control unit 26P connector.

Check for continuity between the ABS control unit 26P connector No. 19 (YEL) terminal and body ground.

Is there continuity?

YES → **Repair short to body ground in the YEL wire between the ABS control unit and modulator unit.**

NO

Connect the ABS control unit 26P connector.

Turn the ignition switch ON.

Measure the voltage between the ABS control unit 26P connector No. 19 (YEL) terminal and body ground.

NOTE: The IG2 voltage inside the ABS control unit is checked in this step.

Is there battery voltage?

NO → **Check for loose ABS control unit connectors. If necessary, substitute a known-good ABS control unit and recheck.**

YES

Pressure switch signal is OK.

MODULATOR UNIT 14P CONNECTOR (MODULATOR UNIT SIDE)

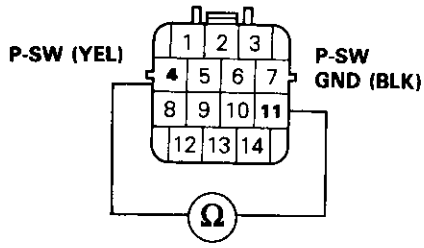

WIRE SIDE OF FEMALE TERMINALS

ABS CONTROL UNIT 26P CONNECTOR

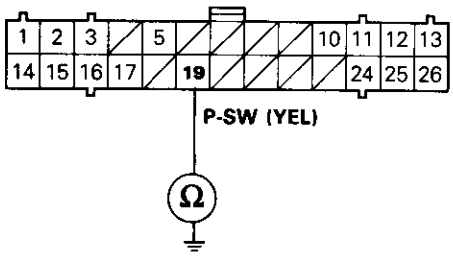

WIRE SIDE OF FEMALE TERMINALS

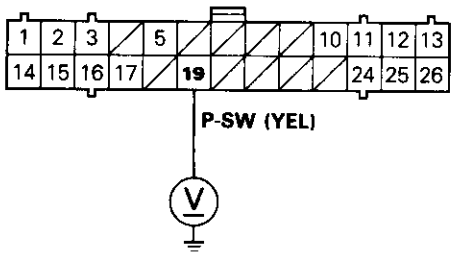

High Pressure System

Diagnostic Trouble Code (DTC) 1-8: High Pressure System Diagnosis

When the ABS control unit detects the pressure switch OFF signal during the initial diagnosis, it drives the ABS pump motor until the pressure switch turns ON. Then, it momentarily activates the outlet solenoid valve and monitors the pressure switch signal.
The ABS control unit keeps the ABS indicator light on if it detects the pressure switch OFF signal at this time.
Possible causes:

- Accumulator gas leakage
- Changed relief valve set pressure
- Rear outlet solenoid valve late to close
- Changed pressure switch set pressure

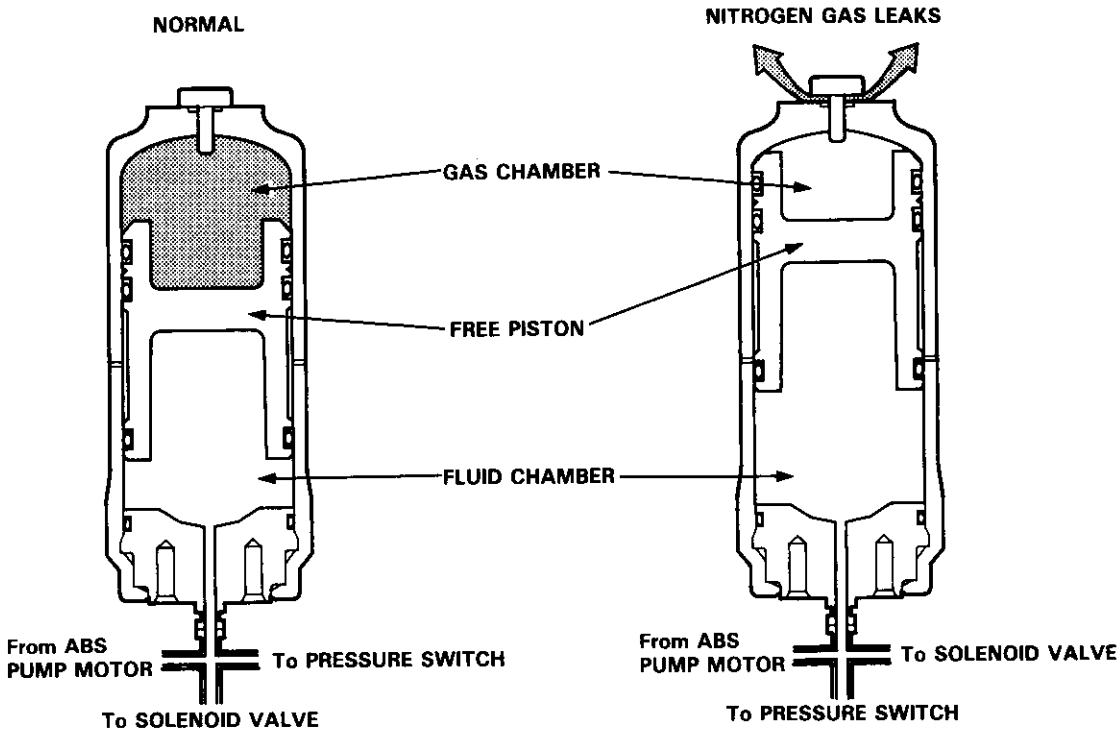

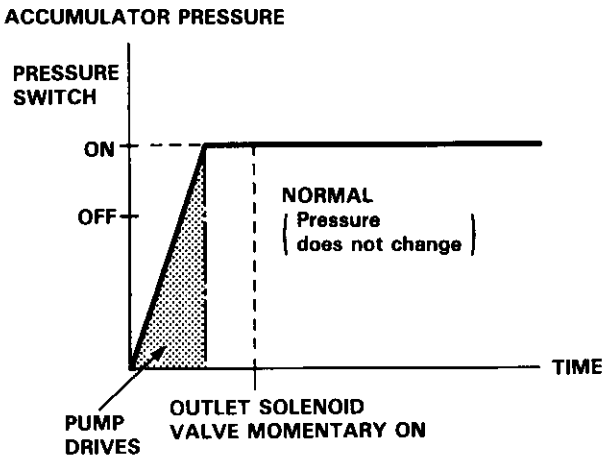

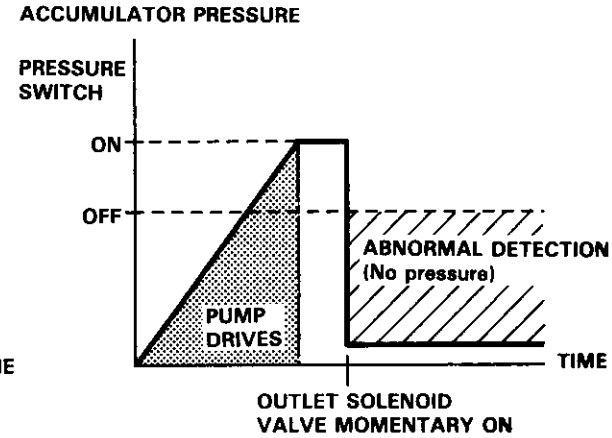

When the pump is operated with no pressure in the accumulator

(cont'd)

High Pressure System (cont'd)

– With engine running, ABS indicator light is ON.
– With the SCS short connector connected (see page 19-56), DTC 1-8 is indicated.

Check the accumulator relief plug.

Is the plug OK?

NO → **Replace the modulator unit. (Accumulator gas leakage)**

YES

Start the engine and allow it to run until the ABS indicator light goes off, then stop the engine. Repeat this procedure 10 times.

NOTE: If there is a problem, the ABS pump motor should operate the second or third time you start the engine. The ABS pump motor operates for a short time.

Does the ABS indicator light go off each time the engine is started.

YES →
- **Intermittent failure, the system is OK at this time.**
- **Replace the modulator unit if the symptom appears again.**

NO

Confirm the ABS code (see page 19-56).

Is code 1-8 indicated?

NO → **Perform the appropriate troubleshooting flowchart for the code.**

YES

Replace the modulator unit.
- **Accumulator gas leakage**
- **Relief valve set pressure out of spec**
- **Rear outlet solenoid valve late to close**
- **Pressure switch set pressure out of spec**

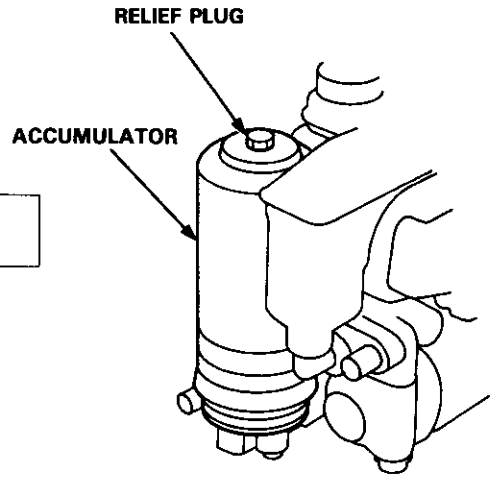

Parking Brake

Diagnostic Trouble Code (TDC) 2-1: Parking Brake Diagnosis

The ABS control unit monitors the parking brake signal during the regular diagnosis (during driving). It turns the ABS indicator light on if it detects the parking brake ON signal for 30 seconds.
Possible causes:

- Driving with the parking brake applied
- Low fluid level in the master cylinder reservoir
- Blown BACK-UP LIGHT (10 A) fuse
- Open circuit between the BACK-UP LIGHT (10 A) fuse and brake system light
- Blown brake system light bulb
- Open circuit or short to body ground between the brake system light and ABS control unit
- Parking brake switch stuck ON
- Short to body ground between the brake system light and parking brake switch
- Brake fluid level switch stuck ON
- Short to body ground between the brake system light and brake fluid level switch
- Faulty ABS control unit

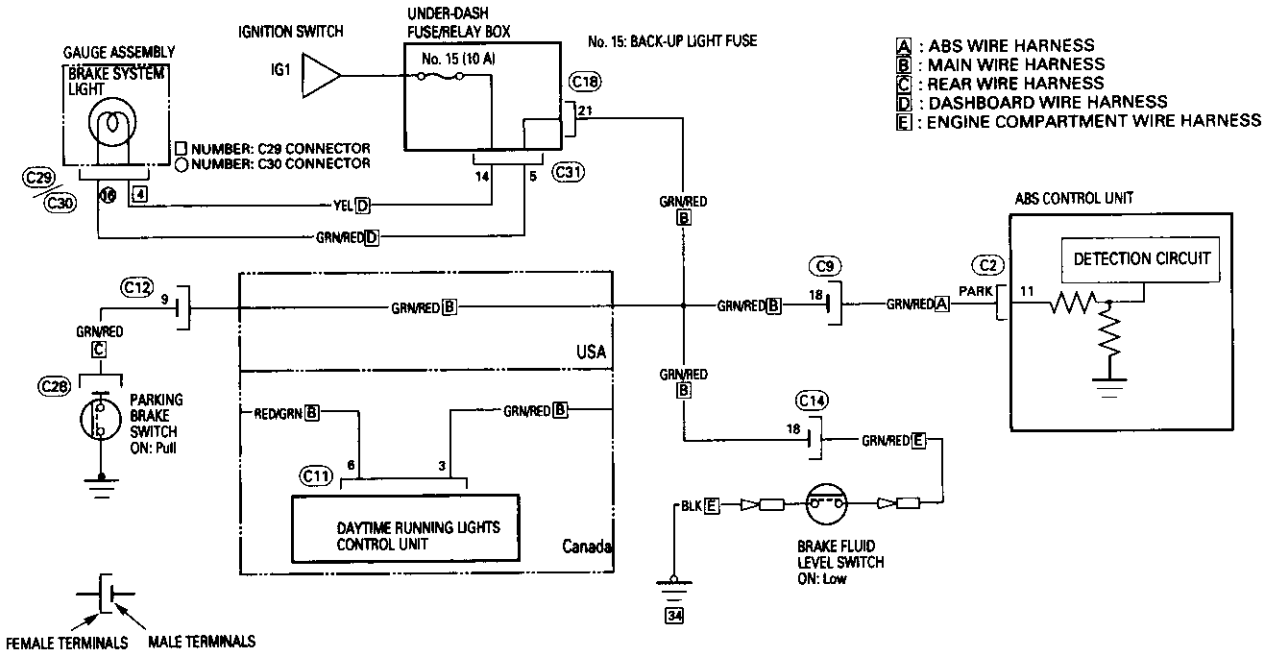

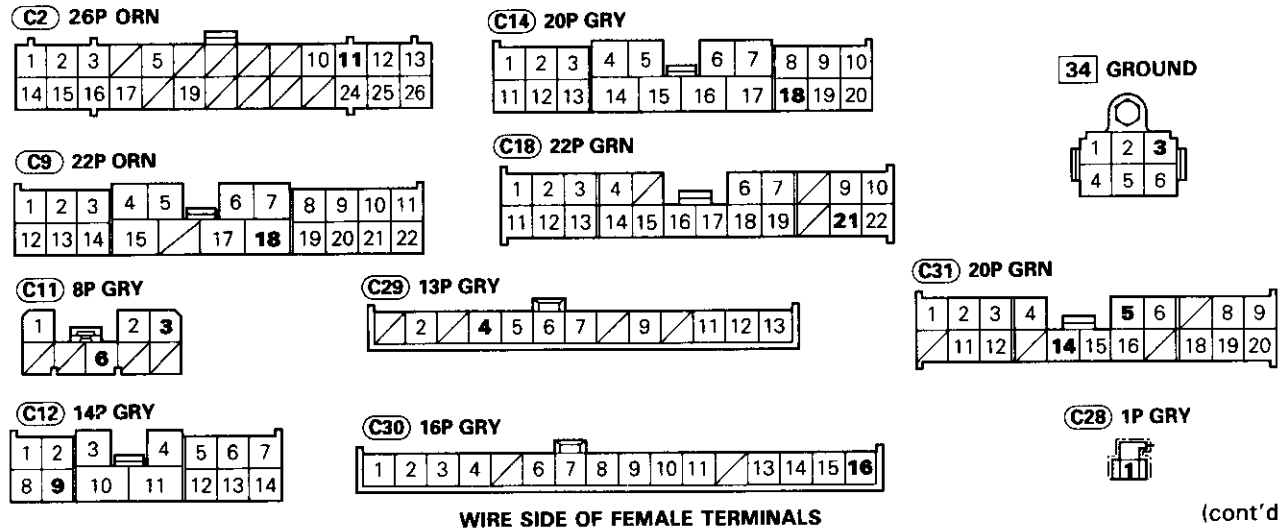

(cont'd)

Parking Brake (cont'd)

– With engine running, ABS indicator light is ON.
– With the SCS short connector connected (see page 19-56), DTC 2-1 is indicated.

Turn the ignition switch ON.

Pull up the parking brake lever.

Does the brake system light come on?
- YES → (To page 19-90)
- NO ↓

Is the ABS indicator light on?
- NO → Check the BACK-UP LIGHT (10 A) fuse in the under-dash fuse/relay box.
- YES ↓

Is the fuse OK?
- NO → **Replace the fuse and recheck.**
- YES ↓

NOTE: Reinstall the fuse if it is OK.

Disconnect the gauge assembly 13P connector.

GAUGE ASSEMBLY 13P CONNECTOR

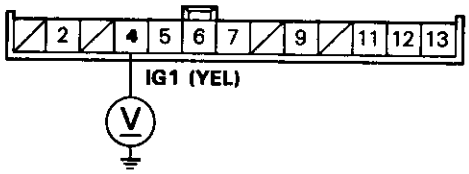

WIRE SIDE OF FEMALE TERMINALS

Measure the voltage between the gauge assembly 13P connector No. 4 (YEL) terminal and body ground.

Is there battery voltage?
- NO → **Repair open in the YEL wire between the BACK-UP LIGHT (10 A) fuse and gauge assembly.**
- YES ↓

Replace the printed circuit board in the gauge assembly.

Remove the gauge assembly (see section 23).

Check the brake system light bulb.

Is the bulb OK?
- NO → **Replace the brake system light bulb.**
- YES ↓

(To page 19-89)

(From page 19-88)

Connect the gauge assembly 13P and 16P connectors.

Short the gauge assembly 16P connector No. 16 (GRN/RED) terminal to body ground.

Does the brake system light come on?

NO → **Replace the printed circuit board in the gauge assembly. (Open in the brake system light ground circuit)**

YES

Short the parking brake switch connector to body ground.

Does the brake system light come on?

NO → **Repair open in the GRN/RED wire between the gauge assembly and parking brake switch.**

YES

Replace the parking brake switch. (Parking brake switch stuck OFF)

GAUGE ASSEMBLY 16P CONNECTOR

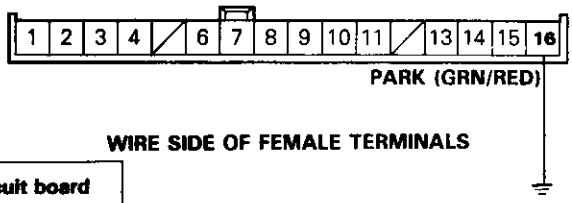

(cont'd)

Parking Brake (cont'd)

(From page 19-88)

ABS CONTROL UNIT 26P CONNECTOR

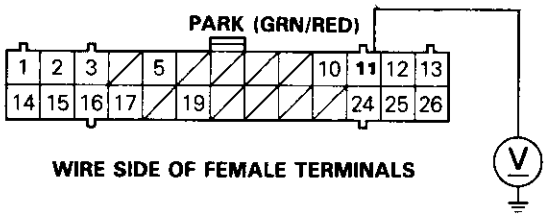

WIRE SIDE OF FEMALE TERMINALS

Release the parking brake lever.

Does the brake system light go off?

- YES → Measure the voltage between the ABS control unit 26P connector No. 11 (GRN/RED) terminal and body ground.
  - Is there battery voltage?
    - NO → **Repair open in the GRN/RED wire between the gauge assembly and ABS control unit.**
    - YES → Test drive the car at speeds of 6 mph (10 km/h) or more for more than 30 seconds.
      - Does the ABS indicator light come on?
        - YES → **Replace the ABS control unit. (Open circuit inside the unit)**
        - NO → **The probable cause was driving with the parking brake applied for more than 30 seconds.**
- NO ↓

Check the brake fluid level in the master cylinder reservoir.

Is the level is correct?

- NO → **Check the front brake pad thickness and brake system for leaks. If there are no problems, refill the master cylinder reservoir to the correct level.**
- YES ↓

Disconnect the brake fluid level switch connectors.

Does the brake system light go off?

- YES → **Replace the brake fluid level switch. (Switch stuck ON)**
- NO ↓

(To page 19-91)

(From page 19-90)

Check the parking brake switch (see section 23).

Is the switch OK?

NO → Replace the parking brake switch. (Switch stuck ON)

YES

Disconnect the ABS control unit 26P connector.

Does the brake system light go off?

YES → Replace the ABS control unit. (Short to the body ground inside the unit)

NO

Repair short to body ground in the GRN/RED wire between the brake system light, parking brake switch and brake fluid level switch.

Pulser/Different Diameter Tire

Diagnostic Trouble Code (DTC) 3-1 to 3-8: Pulser Diagnosis

The ABS control unit monitors the wheel sensor signals during the regular diagnosis (during driving).
It turns the ABS indicator light on if it detects a periodic change in the wheel sensor signal of each wheel caused by a chipped pulser gear, etc.
Possible causes:

- Chipped pulser gear
- Improperly installed wheel sensor

DTC		Pulser			
		Right-front	Left-front	Right-rear	Left-rear
3	1	○			
	2		○		
	3			○	
	4				○

Diagnostic Trouble Code (DTC) 3-12: Different Diameter Tire Diagnosis

The ABS control unit detects the wheel sensor signal speed during the regular diagnosis (during driving).
This diagnosis is not performed when the parking brake switch signal is ON.
The ABS control unit may turn the ABS indicator light on when one, two or three different diameter tires are installed.

Right-front Wheel Sensor

Diagnostic Trouble Code (DTC) 4-1: Right-front Wheel Sensor Diagnosis

The ABS control unit monitors the wheel sensor signal during the regular diagnosis (at speeds of 6 mph (10 km/h) or more). This diagnosis is not performed when the parking brake signal is ON.
The ABS control unit turns the ABS indicator light on if it detects that there is no wheel sensor signal from the right-front wheel.
Possible causes:

- Open circuit, internal short or short to body ground in the right-front wheel sensor
- Open circuit or short to body ground in the positive (+) wire between the right-front wheel sensor and ABS control unit
- Open circuit or short to body ground in the negative (−) wire between the right-front wheel sensor and ABS control unit
- Positive (+) wire shorted to the negative (−) wire between the right-front wheel sensor and ABS control unit
- Loose connector or poor contact of terminals
- Improper right-front wheel sensor air gap
- Faulty ABS control unit
- Missing right-front pulser
- Modulator does not decrease pressure properly

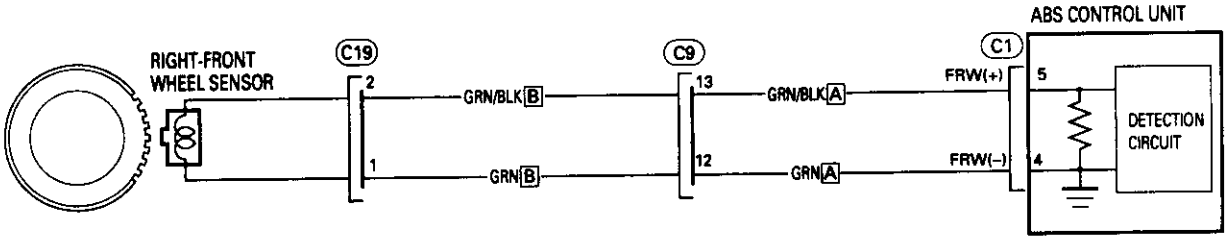

A : ABS WIRE HARNESS
B : MAIN WIRE HARNESS

C1 22P ORN

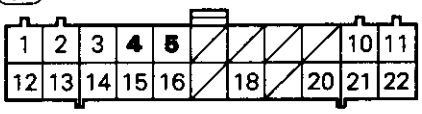

C9 22P ORN

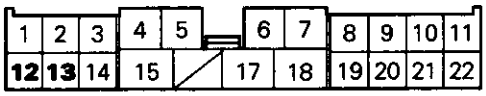

WIRE SIDE OF FEMALE TERMINALS

C19 2P ORN

TERMINAL SIDE OF MALE TERMINALS

(cont'd)

Right-front Wheel Sensor (cont'd)

- With engine running, ABS indicator light is ON.
- With the SCS short connector connected (see page 19-56), DTC 4-1 is indicated.

Disconnect the right-front wheel sensor 2P connector.

Measure the resistance between the wheel sensor 2P connector No. 1 and No. 2 terminals.

Is there 600–900 Ω?

- NO → **Replace the right-front wheel sensor.**
- YES ↓

Check for continuity between the wheel sensor 2P connector No. 2 terminal and body ground.

Is there continuity?

- YES → **Replace the right-front wheel sensor.**
- NO ↓

Disconnect the ABS control unit 22P connector.

Check for continuity between the ABS control unit 22P connector No. 5 (GRN/BLK) terminal and body ground.

NOTE: Check with the wheel sensor 2P connector disconnected.

Is there continuity?

- YES → **Repair short to body ground in the GRN/BLK wire between the ABS control unit and right-front wheel sensor.**
- NO ↓

Check for continuity between the ABS control unit 22P connector No. 4 (GRN) terminal and body ground.

Is there continuity?

- YES → **Repair short to body ground in the GRN wire between the ABS control unit and right-front wheel sensor.**
- NO ↓

(To page 19-95)

RIGHT-FRONT WHEEL SENSOR 2P CONNECTOR

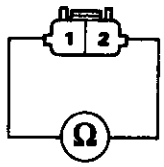

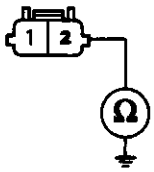

WIRE SIDE OF FEMALE TERMINALS

ABS CONTROL UNIT 22P CONNECTOR

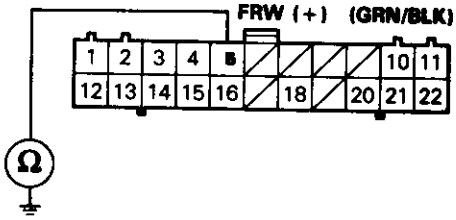

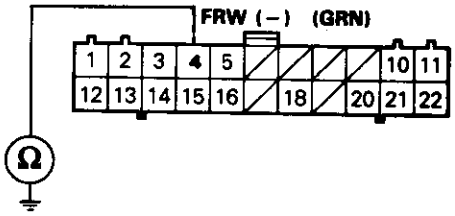

WIRE SIDE OF FEMALE TERMINALS

(From page 19-94)

Connect the right-front wheel sensor 2P connector.

Measure the resistance between the ABS control unit 22P connector No. 4 (GRN) and No. 5 (GRN/BLK) terminals.

ABS CONTROL UNIT 22P CONNECTOR

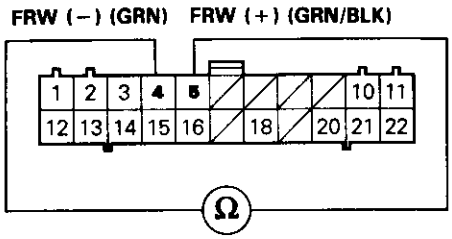

Is there 600−900 Ω?

NO → Short the ABS control unit 22P connector No. 5 (GRN/BLK) terminal to body ground.

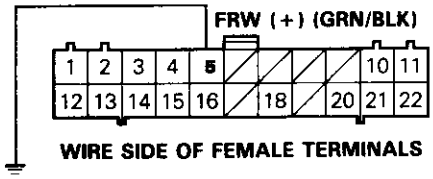

YES

Disconnect the right-front wheel sensor 2P connector.

RIGHT-FRONT WHEEL SENSOR 2P CONNECTOR

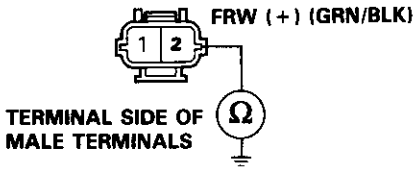

Check for continuity between the wheel sensor 2P connector No. 2 (GRN/BLK) terminal and body ground.

NOTE: Check with the ABS control unit 22P connector disconnected.

Is there continuity?

NO → **Repair open in the GRN/BLK wire between the ABS control unit and right-front wheel sensor.**

YES → **Repair open in the GRN wire between the ABS control unit and right-front wheel sensor.**

Measure the right-front wheel sensor air gap (see page 19-158).

Is the air gap OK?

NO → **Correct the right-front wheel sensor air gap (see page 19-158).**

YES

- If an ALB checker is available, go to page 19-96.
- If an ALB checker is not available, go to page 19-97.

(cont'd)

Right-front Wheel Sensor (cont'd)

(From page 19-95)

Connect the ALB checker to the ABS inspection connector (see page 19-149).

Start the engine.

Turn the Mode Selector switch to "5".

Depress the brake pedal firmly and hold it.

Push the Start Test switch.

Confirm that the right-front wheel can be rotated by hand while the ABS is functioning.

NOTE: This step requires an assistant.

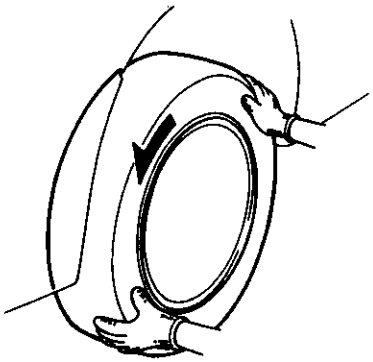

Can the wheel be rotated?

NO → **Replace the modulator unit.**

YES → **Intermittent failure, the system is OK at this time.**
- **Test drive the car. If the symptom reappears, replace the ABS control unit.**

(From page 19-95)

Disconnect the modulator unit 14P connector.

Connect the battery and switch to the modulator unit 14P connector as shown.

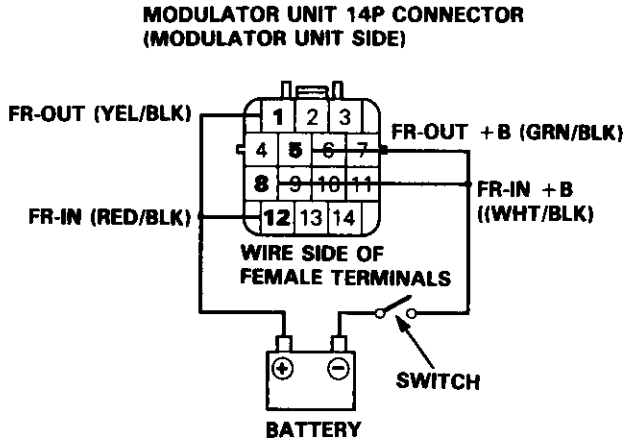

While depressing the brake pedal firmly, momentarily turn the switch on to apply the ABS function to the right-front wheel.

Confirm that the right-front wheel can be rotated by hand when the switch is turned on.

NOTE: This step requires an assistant.

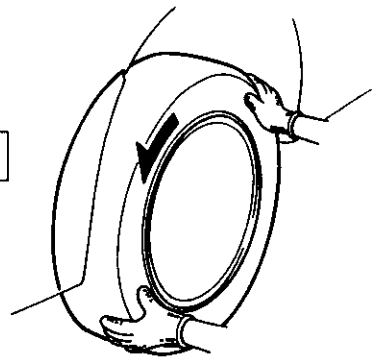

Can the wheel be rotated?

NO → **Replace the modulator unit.**

YES

Intermittent failure, the system is OK at this time.
- **Test drive the car. If the symptom reappears, replace the ABS control unit.**

Left-front Wheel Sensor

Diagnostic Trouble Code (DTC) 4-2: Left-front Wheel Sensor Diagnosis

The ABS control unit monitors the wheel sensor signal during the regular diagnosis (at speeds of 6 mph (10 km/h) or more). This diagnosis is not performed when the parking brake signal is ON.
The ABS control unit turns the ABS indicator light on if it detects that there is no wheel sensor signal from the left-front wheel.
Possible causes:

- Open circuit, internal short or short to body ground in the left-front wheel sensor
- Open circuit or short to body ground in the positive (+) wire between the left-front wheel sensor and ABS control unit
- Open circuit or short to body ground in the negative (−) wire between the left-front wheel sensor and ABS control unit
- Positive (+) wire shorted to the negative (−) wire between the left-front wheel sensor and ABS control unit
- Loose connector or poor contact of terminals
- Improper left-front wheel sensor air gap
- Faulty ABS control unit
- Missing left-front pulser
- Modulator does not decrease pressure properly

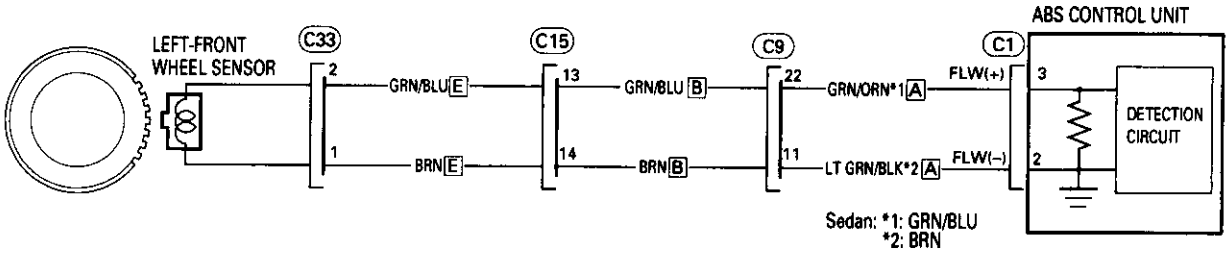

A : ABS WIRE HARNESS
B : MAIN WIRE HARNESS
E : ENGINE COMPARTMENT WIRE HARNESS

C1 22P ORN

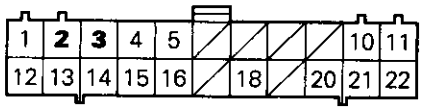

C9 22P ORN

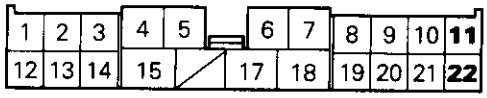

C15 20P BRN

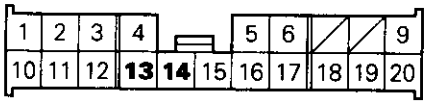

WIRE SIDE OF FEMALE TERMINALS

C33 2P ORN

TERMINAL SIDE OF MALE TERMINALS

- **With engine running, ABS indicator light is ON.**
- **With the SCS short connector connected (see page 19-56), DTC 4-2 is indicated.**

Disconnect the left-front wheel sensor 2P connector.

Measure the resistance between the wheel sensor 2P connector No. 1 and No. 2 terminals.

Is there 600–900 Ω?

NO → **Replace the left-front wheel sensor.**

YES

Check for continuity between the wheel sensor 2P connector No. 2 terminal and body ground.

Is there continuity?

YES → **Replace the left-front wheel sensor.**

NO

Disconnect the ABS control unit 22P connector.

Check for continuity between the ABS control unit 22P connector No. 3 (GRN/BLU*) terminal and body ground.

NOTE: Check with the wheel sensor 2P connector disconnected.

*Hatchback: GRN/ORN

Is there continuity?

YES → **Repair short to body ground in the GRN/BLU* wire between the ABS control unit and left-front wheel sensor.**

***Hatchback: GRN/ORN or GRN/BLU**

NO

Check for continuity between the ABS control unit 22P connector No. 2 (BRN*) terminal and body ground.

*Hatchback: LT GRN/BLK

Is there continuity?

YES → **Repair short to body ground in the BRN* wire between the ABS control unit and left-front wheel sensor.**

***Hatchback: LT GRN/BLK or BRN**

NO

(To page 19-100)

LEFT-FRONT WHEEL SENSOR 2P CONNECTOR

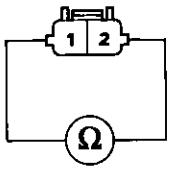

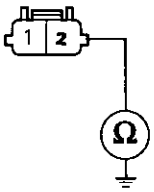

WIRE SIDE OF FEMALE TERMINALS

ABS CONTROL UNIT 22P CONNECTOR

FLW (+) (GRN/BLU*)
***Hatchback: GRN/ORN**

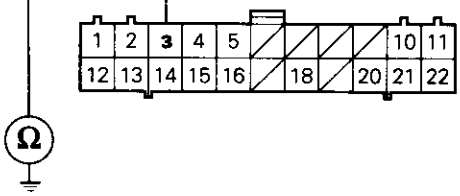

FLW (−) (BRN*)
***Hatchback: LT GRN/BLK**

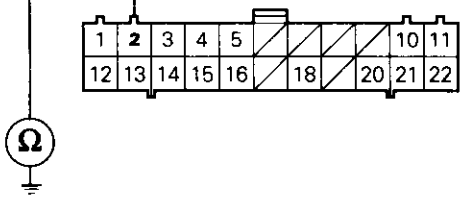

WIRE SIDE OF FEMALE TERMINALS

(cont'd)

Left-front Wheel Sensor (cont'd)

(From page 19-99)

Connect the left-front wheel sensor 2P connector.

Measure the resistance between the ABS control unit 22P connector No. 2 (BRN*1) and No. 3 (GRN/BLU*2) terminals.

*1 Hatchback: LT GRN/BLK
*2 Hatchback: GRN/ORN

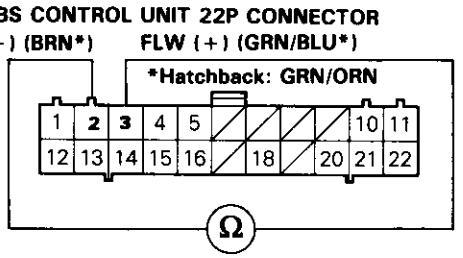

Is there 600−900 Ω?

NO → Short the ABS control unit 22P connector No. 3 (GRN/BLU*) terminal to body ground.

*Hatchback: GRN/ORN

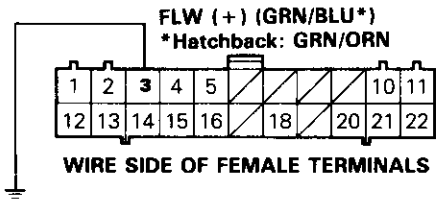

YES

Disconnect the left-front wheel sensor 2P connector.

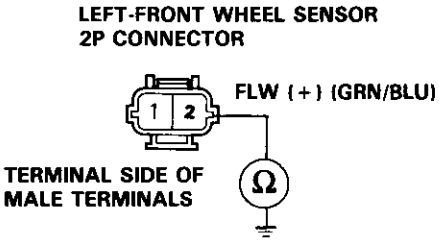

Check for continuity between the wheel sensor 2P connector No. 2 (GRN/BLU) terminal and body.

NOTE: Check with the ABS control unit 22P connector disconnected.

Is there continuity?

NO → **Repair open in the GRN/BLU* wire between the ABS control unit and left-front wheel sensor.**

*Hatchback: GRN/ORN and/or GRN/BLU

YES → **Repair open in the BRN* wires between the ABS control unit and left-front wheel sensor.**

*Hatchback: LG GRN/BLK and/or BRN

Measure the left-front wheel sensor air gap (see page 19-158).

Is the air gap OK?

NO → **Correct the left-front wheel sensor air gap (see page 19-158).**

YES

- If an ALB checker is available, go to page 19-101.
- If an ALB checker is not available, go to page 19-102.

(From page 19-100)

Connect the ALB checker to the ABS inspection connector (see page 19-149).

Start the engine.

Turn the Mode Selector switch to "4".

Depress the brake pedal firmly and hold it.

Push the Start Test switch.

Confirm that the left-front wheel can be rotated by hand while the ABS is functioning.

NOTE: This step requires an assistant.

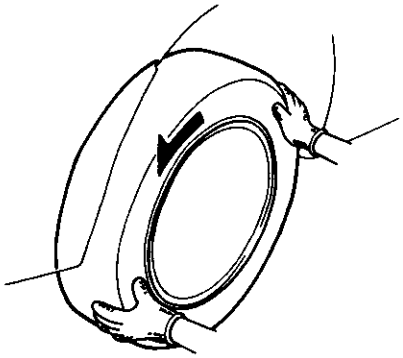

Can the wheel be rotated?

NO → **Replace the modulator unit.**

YES → **Intermittent failure, the system is OK at this time.**
- **Test drive the car. If the symptom reappears, replace the ABS control unit.**

(cont'd)

Left-front Wheel Sensor (cont'd)

(From page 19-100)

Disconnect the modulator unit 14P connector.

Connect the battery and switch to the modulator unit 14P connector as shown.

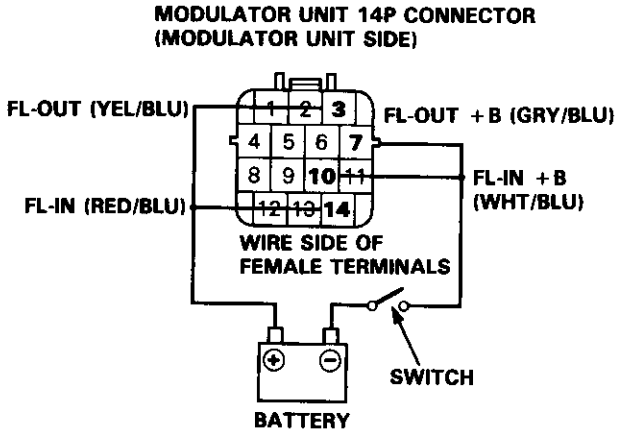

While depressing the brake pedal firmly, momentarily turn the switch on to apply the ABS function to the left-front wheel.

Confirm that the left-front wheel can be rotated by hand when the switch is turned on.

NOTE: This step requires an assistant.

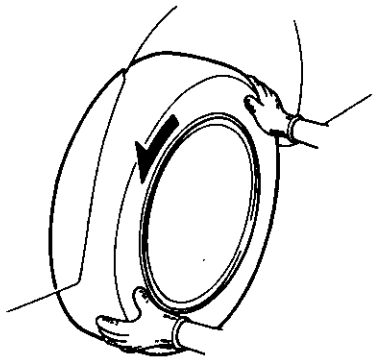

Can the wheel be rotated?

NO → **Replace the modulator unit.**

YES

Intermittent failure, the system is OK at this time.
- **Test drive the car. If the symptom reappears, replace the ABS control unit.**

Right-rear Wheel Sensor

Diagnostic Trouble Code (DTC) 4-4: Right-rear Wheel Sensor Diagnosis

The ABS control unit monitors the wheel sensor signal during the regular diagnosis (at speeds of 6 mph (10 km/h) or more). This diagnosis is not performed when the parking brake signal is ON.
The ABS control unit turns the ABS indicator light on if it detects that there is no wheel sensor signal from the right-rear wheel.
Possible causes:

- Open circuit, internal short or short to body ground in the right-rear wheel sensor
- Open circuit or short to body ground in the positive (+) wire between the right-rear wheel sensor and ABS control unit
- Open circuit or short to body ground in the negative (−) wire between the right-rear wheel sensor and ABS control unit
- Positive (+) wire shorted to the negative (−) wire between the right-rear wheel sensor and ABS control unit
- Loose connector or poor contact of terminals
- Improper right-rear wheel sensor air gap
- Faulty ABS control unit
- Missing right-rear pulser
- Modulator does not decrease pressure properly

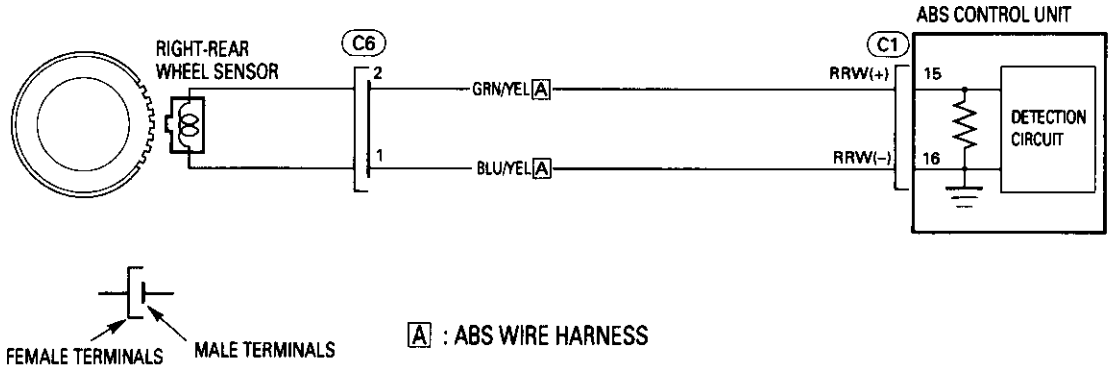

C1 22P ORN

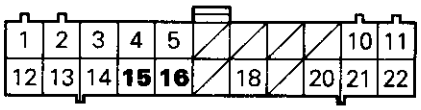

WIRE SIDE OF FEMALE TERMINALS

C6 2P ORN

TERMINAL SIDE OF MALE TERMINALS

(cont'd)

Right-rear Wheel Sensor (cont'd)

– With engine running, ABS indicator light is ON.
– With the SCS short connector connected (see page 19-56), DTC 4-4 is indicated.

Disconnect the right-rear wheel sensor 2P connector.

Measure the resistance between the wheel sensor 2P connector No. 1 and No. 2 terminals.

Is there 700–1100 Ω?

NO → **Replace the right-rear wheel sensor.**

YES

Check for continuity between the wheel sensor 2P connector No. 2 terminal and body ground.

Is there continuity?

YES → **Replace the right-rear wheel sensor.**

NO

Disconnect the ABS control unit 22P connector.

Check for continuity between the ABS control unit 22P connector No. 15 (GRN/YEL) terminal and body ground.

NOTE: Check with the wheel sensor 2P connector disconnected.

Is there continuity?

YES → **Repair short to body ground in the GRN/YEL wire between the ABS control unit and right-rear wheel sensor.**

NO

Check for continuity between the ABS control unit 22P connector No. 16 (BLU/YEL) terminal and body ground.

Is there continuity?

YES → **Repair short to body ground in the BLU/YEL wire between the ABS control unit and right-rear wheel sensor.**

NO

(To page 19-105)

RIGHT-REAR WHEEL SENSOR 2P CONNECTOR

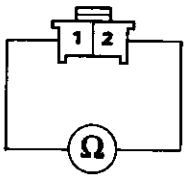

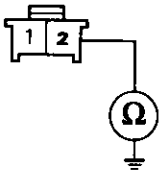

WIRE SIDE OF FEMALE TERMINALS

ABS CONTROL UNIT 22P CONNECTOR

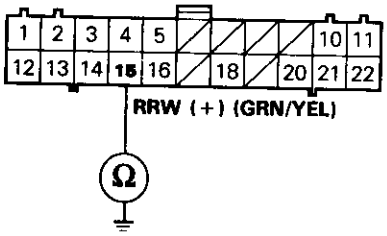

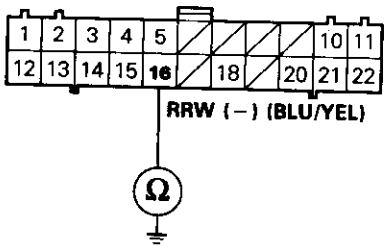

WIRE SIDE OF FEMALE TERMINALS

(From page 19-104)

Connect the right-rear wheel sensor 2P connector.

Measure the resistance between the ABS control unit 22P connector No. 15 (GRN/YEL) and No. 16 (BLU/YEL) terminals.

ABS CONTROL UNIT 22P CONNECTOR

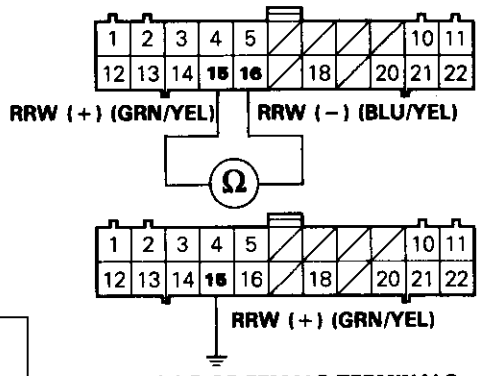

WIRE SIDE OF FEMALE TERMINALS

Is there 700—1100 Ω?

NO → Short the ABS control unit 22P connector No. 15 (GRN/YEL) terminal to body ground.

YES

Disconnect the right-rear wheel sensor 2P connector.

RIGHT-REAR WHEEL SENSOR 2P CONNECTOR

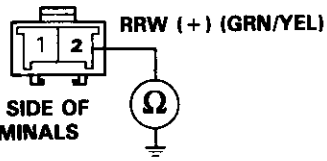

TERMINAL SIDE OF MALE TERMINALS

Check for continuity between the wheel sensor 2P connector No. 2 (GRN/YEL) terminal and body ground.

NOTE: Check with the ABS control unit 22P connector disconnected.

Is there continuity?

NO → **Repair open in the GRN/YEL wire between the ABS control unit and right-rear wheel sensor.**

YES

Repair open in the BLU/YEL wire between the ABS control unit and right-rear wheel sensor.

Measure the right-rear wheel sensor air gap (see page 19-158).

Is the air gap OK?

NO → **Correct the right-rear wheel sensor air gap (see page 19-158).**

YES

- If an ALB checker is available, go to page 19-106.
- When the ALB checker is not available, go to page 19-107.

(cont'd)

Right-rear Wheel Sensor (cont'd)

(From page 19-105)

Connect the ALB checker to the ABS inspection connector (see page 19-149).

Start the engine.

Turn the Mode Selector switch to "3".

Depress the brake pedal firmly and hold it.

Push the Start Test switch.

Confirm that the right-rear wheel can be rotated by hand while the ABS is functioning.

NOTE: This step requires an assistant.

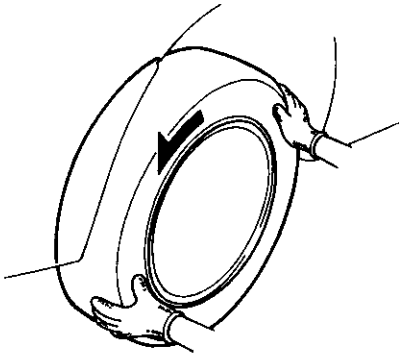

Can the wheel be rotated?

NO → **Replace the modulator unit.**

YES → **Intermittent failure, the system is OK at this time.**
- **Test drive the car. If the symptom reappears, replace the ABS control unit.**

(From page 19-105)

Disconnect the modulator unit 14P connector.

Connect the battery and switch to the modulator unit 14P connector as shown.

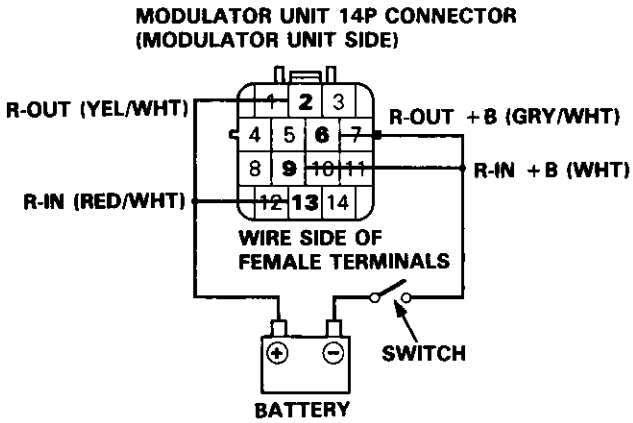

While depressing the brake pedal firmly, momentarily turn the switch on to apply the ABS function to the right-rear wheel.

Confirm that the right-rear wheel can be rotated by hand when the switch is turned on.

NOTE: This step requires an assistant

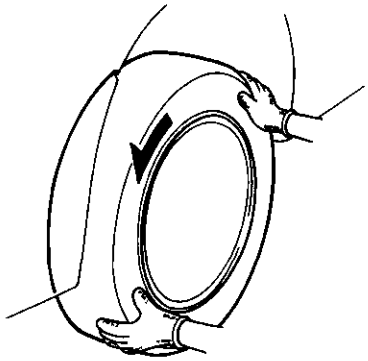

Can the wheel be rotated?

NO → **Replace the modulator unit.**

YES

Intermittent failure, the system is OK at this time.
- **Test drive the car. If the symptom reappears, replace the ABS control unit.**

Left-rear Wheel Sensor

Diagnostic Trouble Code (DTC) 4-8: Left-rear Wheel Sensor Diagnosis

The ABS control unit monitors the wheel sensor signal during the regular diagnosis (at speeds of 6 mph (10 km/h) or more). This diagnosis is not performed when the parking brake signal is ON.
The ABS control unit turns the ABS indicator light on if it detects that there is no wheel sensor signal from the left-rear wheel.
Possible causes:

- Open circuit, internal short or short to body ground in the left-rear wheel sensor
- Open circuit or short to body ground in the positive (+) wire between the left-rear wheel sensor and ABS control unit
- Open circuit or short to body ground in the negative (−) wire between the left-rear wheel sensor and ABS control unit
- Positive (+) wire shorted to the negative (−) wire between the left-rear wheel sensor and ABS control unit
- Loose connector or poor contact of terminals
- Improper left-rear wheel sensor air gap
- Faulty ABS control unit
- Missing left-rear pulser
- Modulator does not decrease pressure properly
- Both front wheels spin (for example, when wheels are stuck)

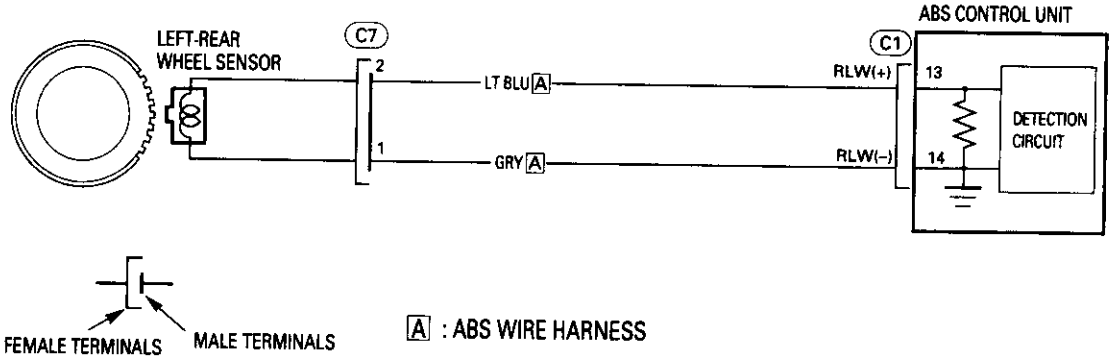

A : ABS WIRE HARNESS

C1 22P ORN

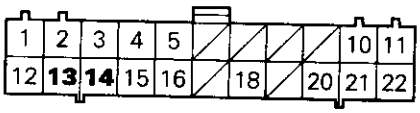

WIRE SIDE OF FEMALE TERMINALS

C7 2P ORN

TERMINAL SIDE OF MALE TERMINALS

- **With engine running, ABS indicator light is ON.**
- **With the SCS short connector connected (see page 19-56), DTC 4-8 is indicated.**

Disconnect the left-rear wheel sensor 2P connector.

Measure the resistance between the wheel sensor 2P connector No. 1 and No. 2 terminals.

Is there 700 – 1100 Ω?

NO → **Replace the left-rear wheel sensor.**

YES

Check for continuity between the wheel sensor 2P connector No. 2 terminal and body ground.

Is there continuity?

YES → **Replace the left-rear wheel sensor.**

NO

Disconnect the ABS control unit 22P connector.

Check for continuity between the ABS control unit 22P connector No. 13 (LT BLU) terminal and body ground.

NOTE: Check with the wheel sensor 2P connector disconnected.

Is there continuity?

YES → **Repair short to body ground in the LT BLU wire between the ABS control unit and left-rear wheel sensor.**

NO

Check for continuity between the ABS control unit 22P connector No. 16 (GRY) terminal and body ground.

Is there continuity?

YES → **Repair short to body ground in the GRY wire between the ABS control unit and left-rear wheel sensor.**

NO

(To page 19-110)

LEFT-REAR WHEEL SENSOR 2P CONNECTOR

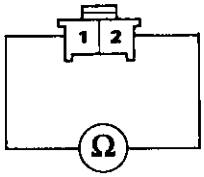

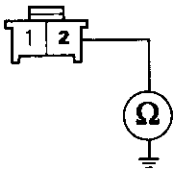

WIRE SIDE OF FEMALE TERMINALS

ABS CONTROL UNIT 26P CONNECTOR

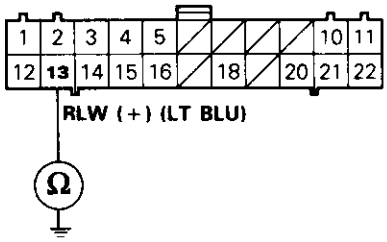

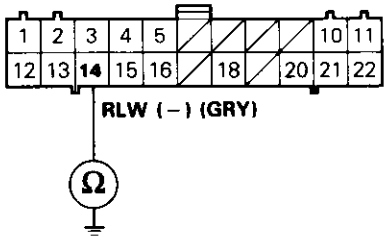

WIRE SIDE OF FEMALE TERMINALS

(cont'd)

Left-rear Wheel Sensor (cont'd)

(From page 19-109)

Connect the left-rear wheel sensor 2P connector.

Measure the resistance between the ABS control unit 22P connector No. 13 (LT BLU) and No. 14 (GRY) terminals.

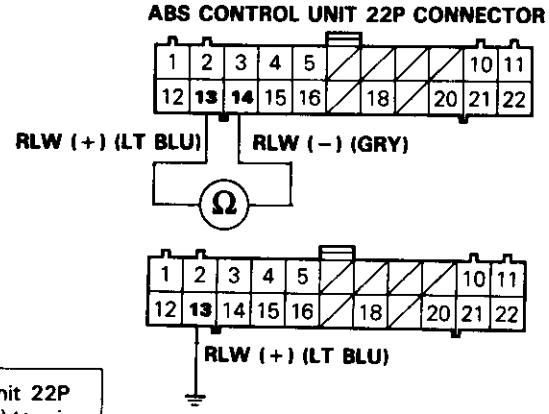

Is there 700–1100 Ω?

NO → Short the ABS control unit 22P connector No. 13 (LT BLU) terminal to the body ground.

YES

Disconnect the left-rear wheel sensor 2P connector.

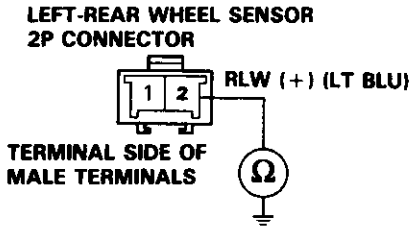

Check for continuity between the wheel sensor 2P connector No. 2 (LT BLU) terminal and body ground.

NOTE: Check with the ABS control unit 22P connector disconnected.

Is there continuity?

NO → **Repair open in the LT BLU wire between the ABS control unit and left-rear wheel sensor.**

YES

Repair open in the GRY wire between the ABS control unit and left-rear wheel sensor.

Measure the left-rear wheel sensor air gap (see page 19-158).

Is the air gap OK?

NO → **Correct the left-rear wheel sensor air gap (see page 19-158).**

YES

- If an ALB checker is available, go to page 19-111.
- If an ALB checker is not available, go to page 19-112.

(From page 19-110)

Connect the ALB checker to the ABS inspection connector (see page 19-149).

Start the engine.

Turn the Mode Selector switch to "2".

Depress the brake pedal firmly and hold it.

Push the Start Test switch.

Confirm that the left-rear wheel can be rotated by hand while the ABS is functioning.

NOTE: This step requires an assistant.

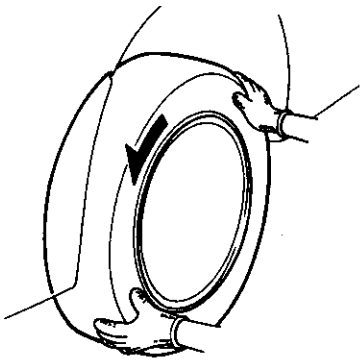

Can the wheel be rotated?

NO → **Replace the modulator unit.**

YES → **Intermittent failure, the system is OK at this time.**
- **Test drive the car. If the symptom reappears, replace the ABS control unit.**

(cont'd)

Left-rear Wheel Sensor (cont'd)

(From page 19-110)

Disconnect the modulator unit 14P connector.

Connect the battery and switch to the modulator unit 14P connector as shown.

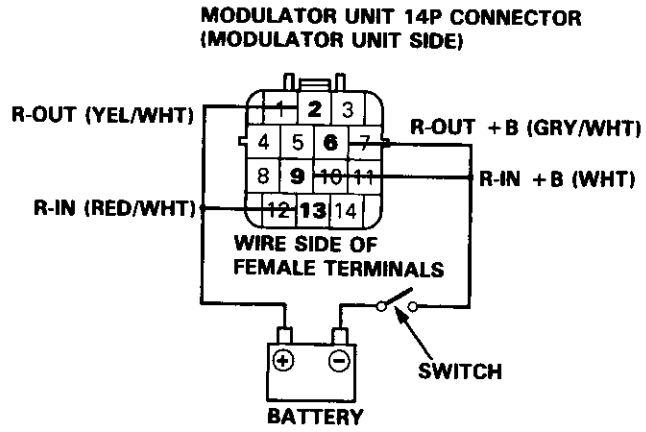

While depressing the brake pedal firmly, momentarily turn the switch on to apply the ABS function to the left-rear wheel.

Confirm that the left-rear wheel can be rotated by hand when the switch is turned on.

NOTE: This step requires an assistant.

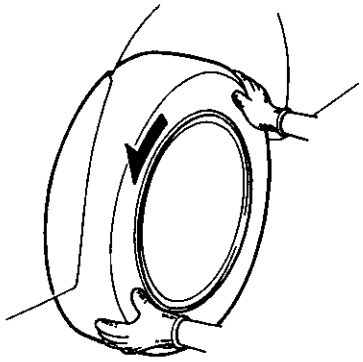

Can the wheel be rotated?

NO → **Replace the modulator unit.**

YES

Intermittent failure, the system is OK at this time.
- **Test drive the car. If the symptom reappears, replace the ABS control unit.**

Rear Wheel Lock

Diagnostic Trouble Code (DTC) 5 to 5-8: Rear Wheel Lock Diagnosis

The ABS control unit monitors the rear wheel sensor signals during the regular diagnosis (during driving).
This diagnosis is not performed when the parking brake signal is ON.
The ABS control unit turns the ABS indicator light on if it detects no signal(s) from the rear wheel sensor(s) due to, for example, rear wheel lock.
Possible causes:

- Wheel spin during cornering
- Open circuit, internal short or short to the body ground in the wheel sensor system
- Rear brake drag
- Modulator does not decrease pressure properly
- Faulty ABS control unit

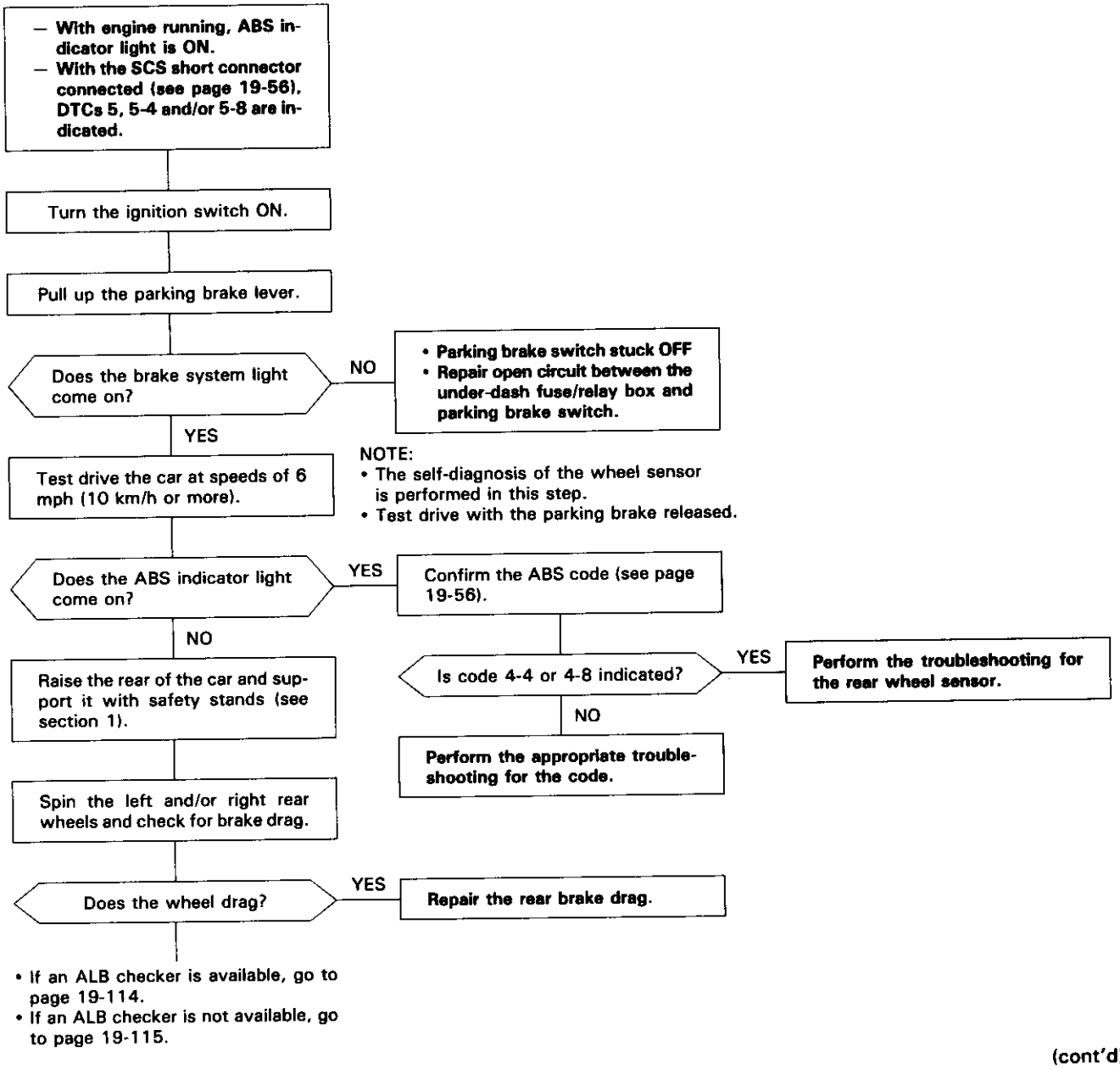

(cont'd)

Rear Wheel Lock (cont'd)

(From page 19-113)

Connect the ALB checker to the ABS inspection connector (see page 19-149).

Start the engine.

Turn the Mode Selector switch to "2".

Depress the brake pedal firmly and hold it.

Push the Start Test switch.

Confirm that the rear wheels can be rotated by hand while the ABS is functioning.

NOTE: This step requires an assistant.

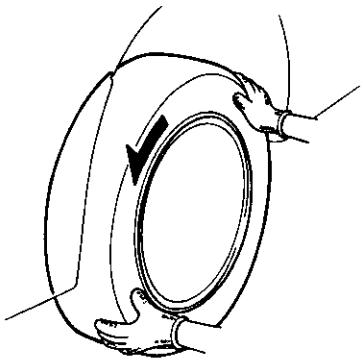

Can the wheels be rotated?

NO → **Replace the modulator unit.**

YES →

Intermittent failure, the system is OK at this time.
- **The probable cause was that the traction was lost due to excessive cornering speed, etc.**
- **Replace the modulator unit if the symptom reappears.**

(From page 19-113)

Disconnect the modulator unit 14P connector.

Connect the battery and switch to the modulator unit 14P connector as shown.

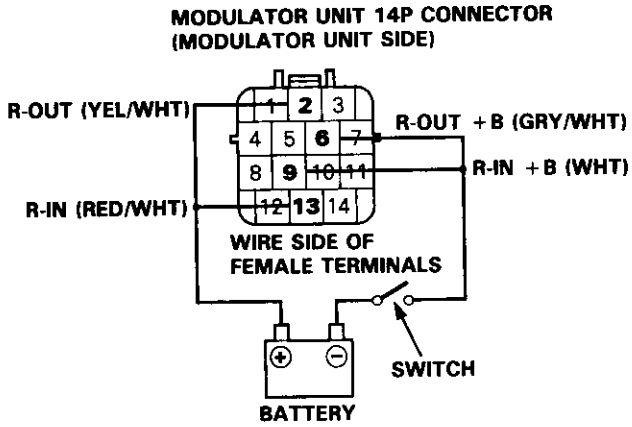

While depressing the brake pedal firmly, momentarily turn the switch on to apply the ABS function to the rear wheels.

Confirm that the rear wheels can be rotated by hand when the switch is turned on.

NOTE: This step requires an assistant.

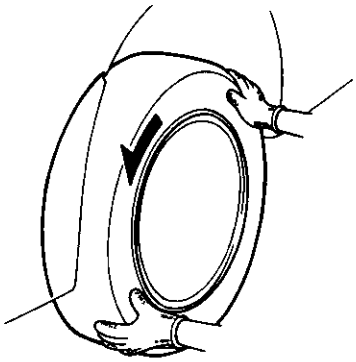

Can the wheels be rotated?

NO → **Replace the modulator unit.**

YES

Intermittent failure, the system is OK at this time.
- **The probable cause was that the traction was lost due to excessive cornering speed, etc.**
- **Replace the modulator unit if the symptom reappears.**

Front and Rear Fail-safe Relays

Diagnostic Trouble Code (DTC) 6: Front and Rear Fail-safe Relays Diagnosis

The ABS control unit monitors the voltage from the battery for the six solenoids during the initial diagnosis when the fail-safe relays are OFF.
The ABS control unit keeps the ABS indicator light on if it detects battery voltage at the front and rear solenoid circuits.
Possible causes:

- Short to power in the relay drive circuits between the fail-safe relays and ABS control unit
- Faulty relay drive transistor (ON) in the ABS control unit

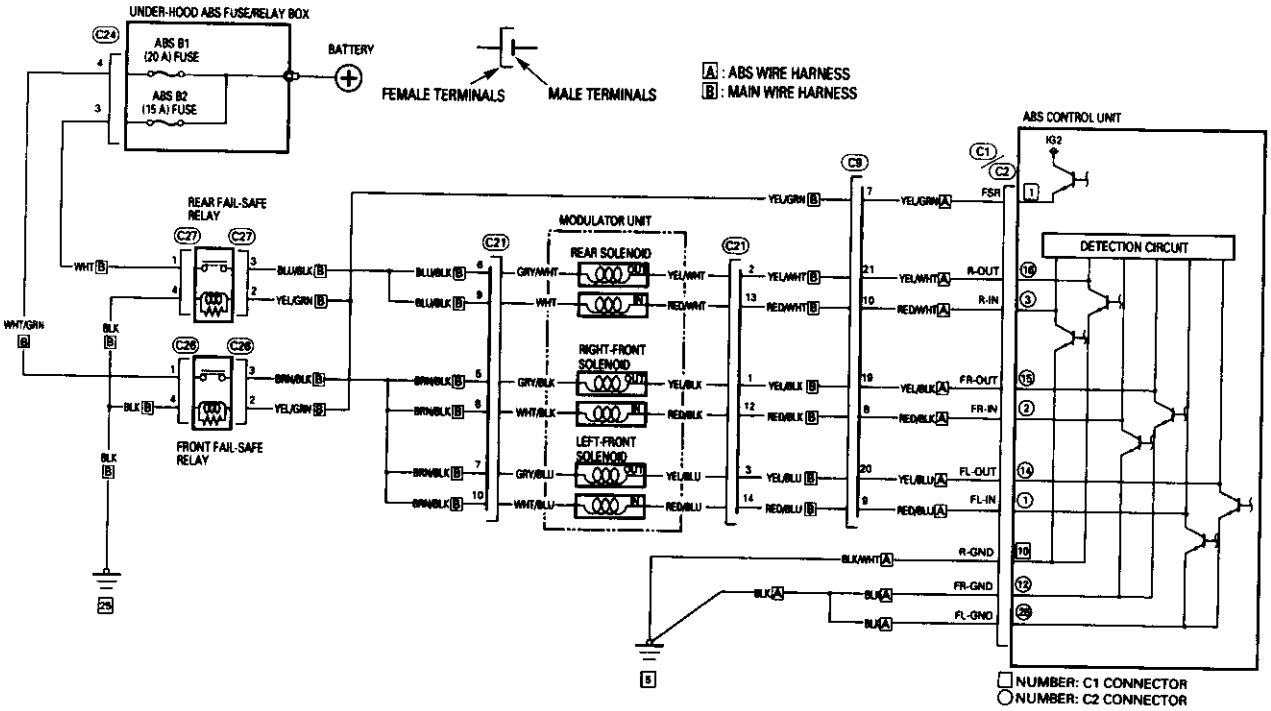

C1 22P ORN

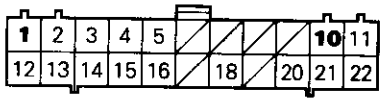

C2 26P ORN

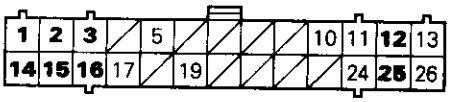

C9 22P ORN

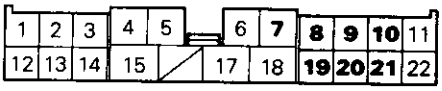

WIRE SIDE OF FEMALE TERMINALS

C26/C27 4P ORN

C24 4P ORN

C21 14P ORN

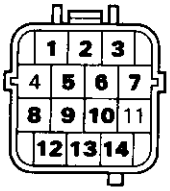

TERMINAL SIDE OF MALE TERMINALS

5 / 25 GROUND

- With engine running, ABS indicator light is ON.
- With the SCS short connector connected (see page 19-56), DTC 6 is indicated.

Start the engine.

Does the ABS indicator light go off?

YES → **The ABS is OK at this time. Check for damaged wire harness between the ABS control unit, solenoids and fail-safe relays (intermittent short to power).**

NO

Confirm the ABS code that appears first.

Is code 6 indicated?

NO → **Perform the appropriate troubleshooting for the code.**

YES

Disconnect the ABS control unit 22P connector.

Start the engine.

Measure the voltage between the ABS control unit 22P connector No. 1 (YEL/GRN) terminal and body ground.

Is there battery voltage?

YES → **Repair short to power in the YEL/GRN wire between ABS control unit, and front and rear fail-safe relays.**

NO

Stop the engine.

(To page 19-118)

ABS CONTROL UNIT 22P CONNECTOR

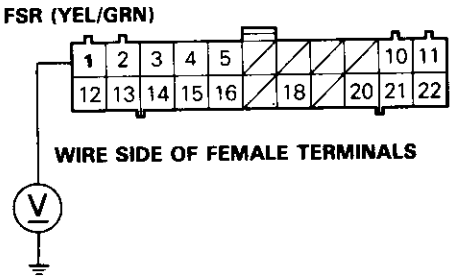

(cont'd)

Front and Rear Fail-safe Relays (cont'd)

(From page 19-117)

Connect the ABS control unit 22P connector.

Turn the ignition switch ON.

Measure the voltage between the ABS control unit 22P connector No. 1 (YEL/GRN) terminal and body ground.

Is there battery voltage?

YES → **Replace the ABS control unit. (Faulty fail-safe relay drive transistor)**

NO → **Perform the troubleshooting for DTC 6-1 (see page 19-119) and DTC 6-4 (see page 19-122).**

ABS CONTROL UNIT 22P CONNECTOR

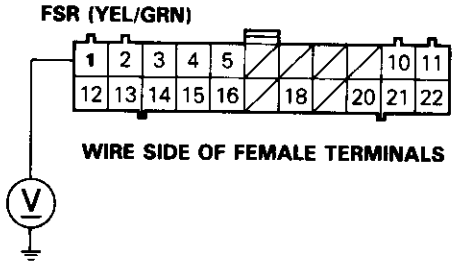

Front Fail-safe Relay

Diagnostic Trouble Code (DTC) 6-1: Front Fail-safe Relay Diagnosis

The ABS control unit monitors the voltage from the battery for the six solenoids during the initial diagnosis when the fail-safe relays are OFF.
The ABS control unit keeps the ABS indicator light on if it detects battery voltage at the front solenoid circuits.
Possible causes:

- Front fail-safe relay stuck ON
- Short to power in the solenoid drive circuits between the front fail-safe relay and ABS control unit.

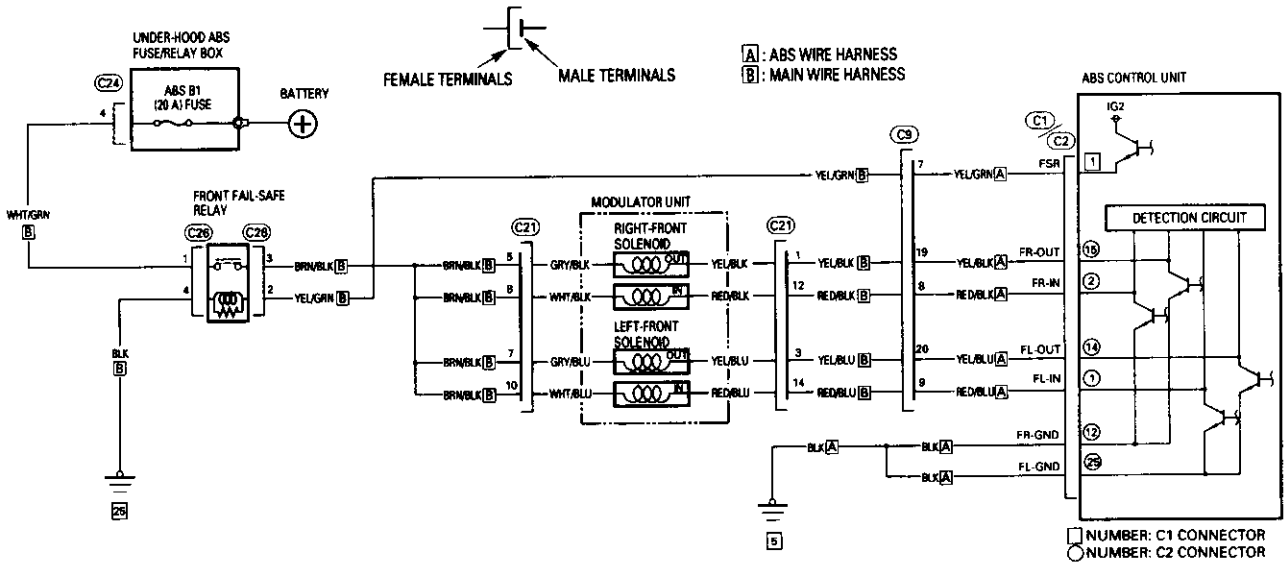

C1 22P ORN

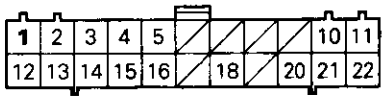

C2 26P ORN

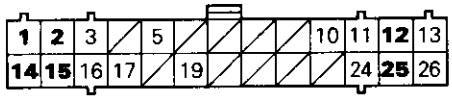

C9 22P ORN

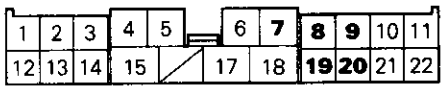

WIRE SIDE OF FEMALE TERMINALS

C26 4P ORN

C24 4P ORN

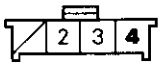

C21 14P ORN

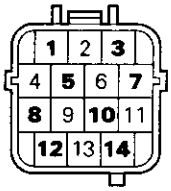

TERMINAL SIDE OF MALE TERMINALS

5 / 25 GROUND

(cont'd)

Front Fail-safe Relay (cont'd)

– With engine running, ABS indicator light is ON.
– With the SCS short connector connected (see page 19-56), DTC 6-1 is indicated.

Start the engine.

Does the ABS indicator light go off?

YES → **The ABS is OK at this time. Check for damaged wire harness between the ABS control unit, solenoids and front fail-safe relay (intermittent short to power).**

NO

Confirm the ABS code that appears first.

Is code 6-1 indicated?

NO → **Perform the appropriate troubleshooting for the code.**

YES

Check the front fail-safe relay (see page 19-157).

Wire colors of the front fail-safe relay connector: WHT/GRN, BRN/BLK, YEL/GRN, BLK

Is the relay OK?

NO → **Replace the front fail-safe relay.**

YES

Disconnect the modulator unit 14P connector.

Visually check the modulator wire harness.

Is there a short to power?

YES → **Replace the modulator wire harness (or repair short).**

NO

Start the engine.

Measure the voltage between the front fail-safe relay connector No. 3 (BRN/BLK) terminal and body ground.

NOTE: The fail-safe relays are OFF when the ABS indicator light is kept on.

Is there battery voltage?

YES → **Repair short to power in the BRN/BLK wire between the front fail-safe relay and modulator unit.**

NO

(To page 19-121)

FRONT FAIL-SAFE RELAY CONNECTOR

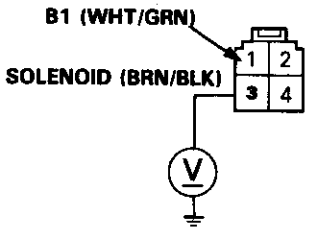

WIRE SIDE OF FEMALE TERMINALS

(From page 19-120)

Stop the engine.

Disconnect the ABS control unit 26P connector.

Start the engine.

Measure the voltage between the ABS control unit 26P connector No. 2 (RED/BLK) terminal and body ground.

NOTE: Check with the modulator unit 14P connector disconnected.

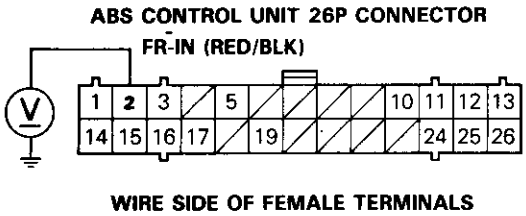

Is there battery voltage?

YES → **Repair short to power in the RED/BLK wire between the ABS control unit and modulator unit.**

NO

Measure the voltage between the ABS control unit 26P connector No. 1 (RED/BLU) terminal and body ground.

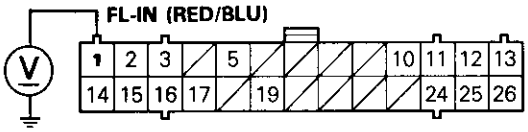

Is there battery voltage?

YES → **Repair short to power in the RED/BLU wire between the ABS control unit and modulator unit.**

NO

Measure the voltage between the ABS control unit 26P connector No. 15 (YEL/BLK) terminal and body ground.

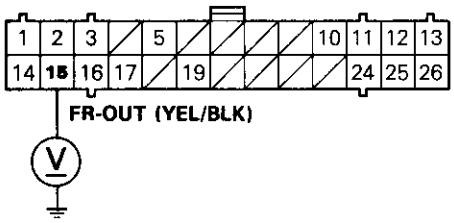

Is there battery voltage?

YES → **Repair short to power in the YEL/BLK wire between the ABS control unit and modulator unit.**

NO

Measure the voltage between the ABS control unit 26P connector No. 14 (YEL/BLU) terminal and body ground.

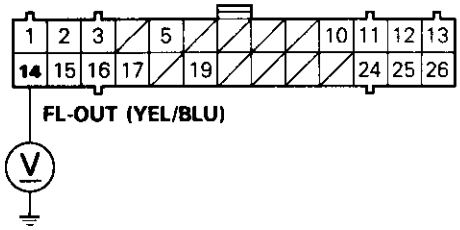

Is there battery voltage?

YES → **Repair short to power in the YEL/BLU wire between the ABS control unit and modulator unit.**

NO

Check for loose ABS control unit connectors. If necessary, substitute a known-good ABS control unit and recheck.

Rear Fail-safe Relay

Diagnostic Trouble Code (DTC) 6-4: Rear Fail-safe Relay Diagnosis

The ABS control unit monitors the voltage from the battery for the six solenoids during the initial diagnosis when the fail-safe relays are OFF.
The ABS control unit keeps the ABS indicator light on if it detects the batery voltage at the two rear solenoid circuits.
Possible causes:

- Rear fail-safe relay stuck ON
- Short to power in the solenoid drive circuits between the rear fail-safe relay and ABS control unit

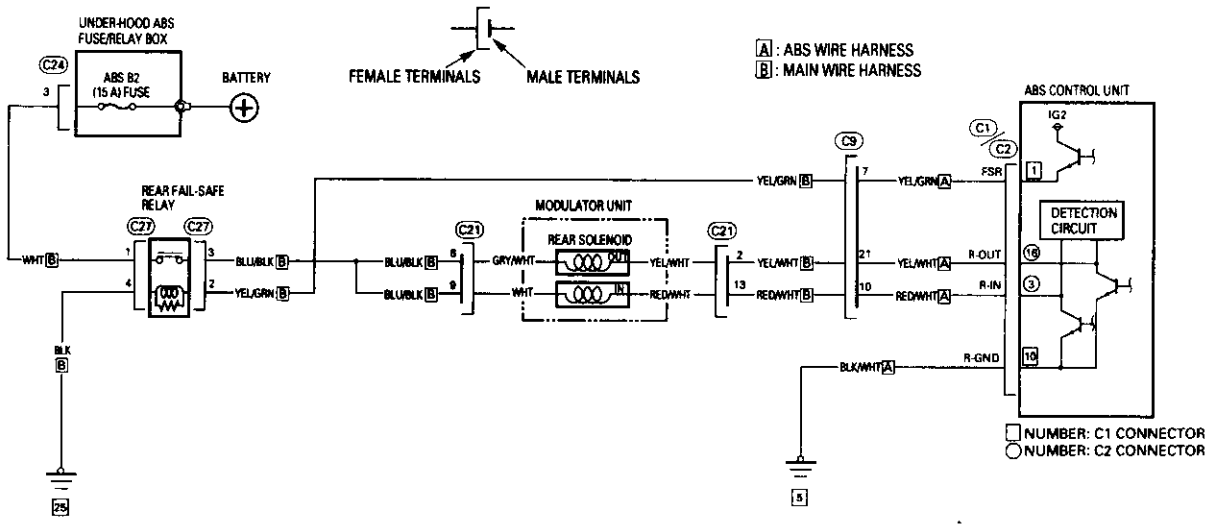

C1 22P ORN

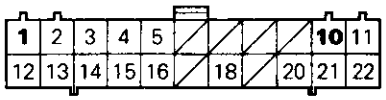

C2 26P ORN

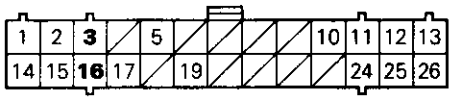

C9 22P ORN

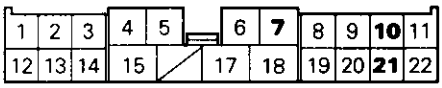

WIRE SIDE OF FEMALE TERMINALS

C27 4P ORN

C24 4P ORN

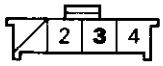

C21 14P ORN

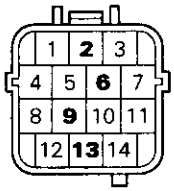

TERMINAL SIDE OF MALE TERMINALS

5 / 25 GROUND

– With engine running, ABS indicator light is ON.
– With the SCS short connector connected (see page 19-56), DTC 6-4 is indicated.

Start the engine.

Does the ABS indicator light go off?

YES → **The ABS is OK at this time. Check for damaged wire harness between the ABS control unit, solenoid and rear fail-safe relay (intermittent short to power).**

NO

Confirm the ABS code that appears first.

Is code 6-4 indicated?

NO → **Perform the appropriate troubleshooting for the code.**

YES

Check the rear fail-safe relay (see page 19-157).

Wire colors of the rear fail-safe relay connector: WHT, BLU/BLK, YEL/GRN, BLK

Is the relay OK?

NO → **Replace the rear fail-safe relay.**

YES

Disconnect the modulator unit 14P connector.

Visually check the modulator wire harness.

Is there a short to power?

YES → **Replace the modulator wire harness (or repair short).**

NO

Start the engine.

Measure the voltage between the rear fail-safe relay connector No. 3 (BLU/BLK) terminal and body ground.

NOTE: The fail-safe relays are OFF when the ABS indicator light is kept on.

Is there battery voltage?

YES → **Repair short to power in the BLU/BLK wire between the rear fail-safe relay and modulator unit.**

NO

(To page 19-124)

REAR FAIL-SAFE RELAY CONNECTOR

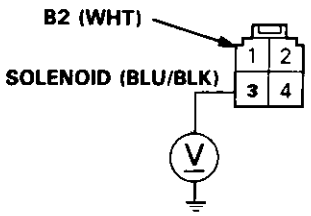

WIRE SIDE OF FEMALE TERMINALS

(cont'd)

Rear Fail-safe Relay (cont'd)

(From page 19-123)

Stop the engine.

Disconnect the ABS control unit 26P connector.

Start the engine.

Measure the voltage between the ABS control unit 26P connector No. 3 (RED/WHT) terminal and body ground.

NOTE: Check with the modulator unit 14P connector disconnected.

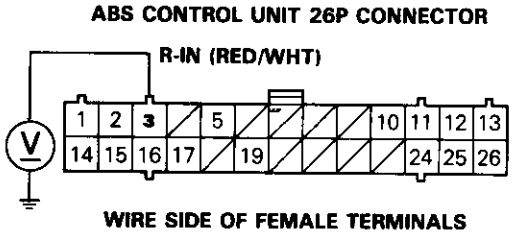

Is there battery voltage?

YES → **Repair short to power in the RED/WHT wire between the ABS control unit and modulator unit.**

NO

Measure the voltage between the ABS control unit 26P connector No. 16 (YEL/WHT) terminal and body ground.

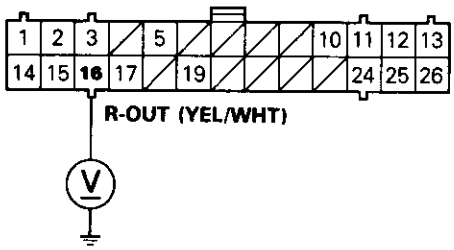

Is there battery voltage?

YES → **Repair short to power in the YEL/WHT wire between the ABS control unit and modulator unit.**

NO

Check for loose ABS control unit connectors. If necessary, substitute a known-good ABS control unit and recheck.

Right-front Solenoid

Diagnostic Trouble Code (DTC) 7-1: Right-front Solenoid Diagnosis

During the initial diagnosis, after the fail-safe relays are turned on, and during the regular diagnosis, the ABS control unit monitors the voltage from the battery for the six solenoids (when the ABS is not functioning).
If the detection circuit for the right-front solenoid detects 0 V, the ABS control unit keeps the ABS indicator light on after the engine is started. It turns the ABS indicator light on again if it detects 0 V after the light goes off.
Possible causes:

- Open circuit in the right-front solenoid drive circuits between the front fail-safe relay and ABS control unit
- Short circuit to body ground in the right-front solenoid drive circuits between the solenoids and ABS control unit
- Faulty right-front solenoid drive transistor (ON) in the ABS control unit

The ABS control unit momentarily outputs the ON signal to each solenoid (too mometary to turn the solenoid on) during the initial diagnosis, and each time the car is started, to check the voltage from the battery with the detection circuit. If the detection circuit for the right-front solenoids detects battery voltage at this time, the ABS control unit keeps the ABS indicator light on. It turns the ABS indicator light on again if it detects battery voltage when the car is started.
Possible causes:

- Short circuit to power in the right-front solenoid drive circuits between the solenoids and ABS control unit
- Faulty right-front solenoid drive transistor (OFF) in the ABS control unit
- Short circuit to power in the right-front solenoid drive circuits in the modulator wire harness or solenoids
- Short circuit to the right-front solenoid outlet circuit in the inlet circuit between the solenoid and ABS control unit

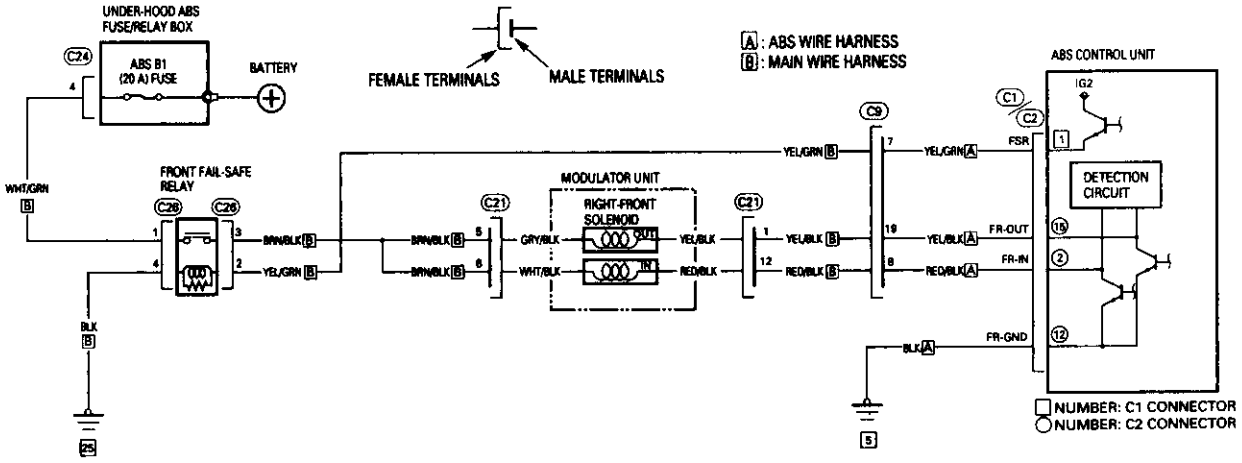

C1 22P ORN

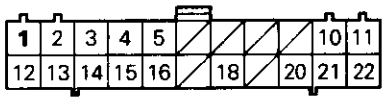

C26 4P ORN

C21 14P ORN

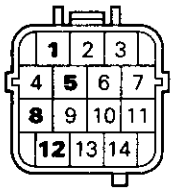

C2 26P ORN

C24 4P ORN

TERMINAL SIDE OF MALE TERMINALS

C9 22P ORN

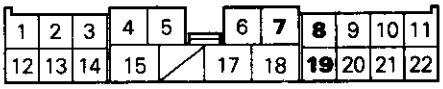

5 / 25 GROUND

WIRE SIDE OF FEMALE TERMINALS

(cont'd)

Right-front Solenoid (cont'd)

- **With engine running, ABS indicator light is ON.**
- **With the SCS short connector connected (see page 19-56), DTC 7-1 is indicated.**

Start the engine.

Does the ABS indicator light go off?

YES → **The system is OK at this time. Check the wire harness and connectors between the ABS control unit, fail-safe relay and modulator unit (intermittent open or short circuit).**

NO

Confirm the ABS code that appears first.

Is code 7-1 indicated?

NO → **Perform the appropriate troubleshooting for the code.**

YES

Disconnect the modulator unit 14P connector.

Remove the front fail-safe relay.

Wire colors of the front fail-safe relay connector: WHT/GRN, BRN/BLK, YEL/GRN, BLK

Connect the front fail-safe relay connector No. 1 (WHT/GRN) and No. 3 (BRN/BLK) terminals using a jumper wire.

Measure the voltage between the modulator unit 14P connector No. 5 (BRN/BLK) terminal and body ground.

Is there battery voltage?

NO → **Repair open in the BRN/BLK wire between the front fail-safe relay and modulator unit.**

YES

Measure the voltage between the modulator unit 14P connector No. 8 (BRN/BLK) terminal and body ground.

Is there battery voltage?

NO → **Repair open in the BRN/BLK wire between the front fail-safe relay and modulator unit.**

YES

(To page 19-127)

FRONT FAIL-SAFE RELAY CONNECTOR

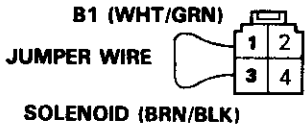

WIRE SIDE OF FEMALE TERMINALS

MODULATOR UNIT 14P CONNECTOR (ABS CONTROL UNIT SIDE)

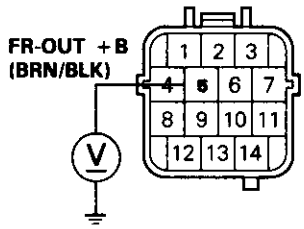

TERMINAL SIDE OF MALE TERMINALS

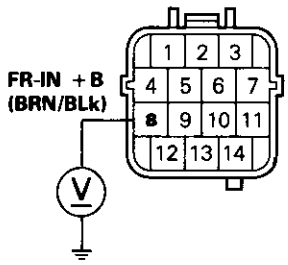

(From page 19-126)

Measure the resistance between modulator unit 14P connector No. 1 (YEL/BLK) ane No. 5 (GRY/BLK) terminals.

Is the resistance 2.5 – 2.9Ω?

NO → **Visually inspect the modulator wire harness. If the harness is OK, replace the modulator unit. (Open or short in the right-front outlet solenoid)**

YES

MODULATOR UNIT 14P CONNECTOR (MODULATOR UNIT SIDE)

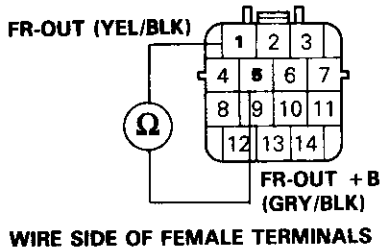

Check for continuity between the modulator unit 14P connector No. 1 (YEL/BLK) terminal and body ground.

Is there continuity?

YES → **Visually inspect the modulator wire harness. If the harness is OK, replace the modulator unit. (Short to body ground in the right-front outlet solenoid)**

NO

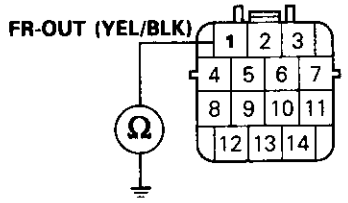

Measure the resistance between modulator unit 14P connector No. 8 (WHT/BLK) and No. 12 (RED/BLK) terminals.

Is the resistance 2.5 – 2.9Ω?

NO → **Visually inspect the modulator wire harness. If the harness is OK, replace the modulator unit. (Open or short in the right-front inlet solenoid)**

YES

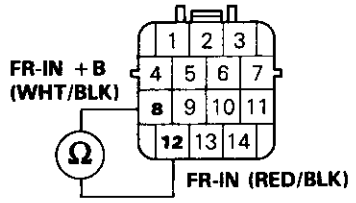

Check for continuity between the modulator unit 14P connector No. 12 (RED/BLK) terminal and body ground.

Is there continuity?

YES → **Visually inspect the modulator wire harness. If the harness is OK, replace the modulator unit. (Short to body ground in the right-front inlet solenoid)**

NO

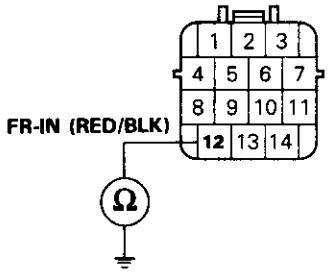

(To page 19-128)

(cont'd)

Right-front Solenoid (cont'd)

(From page 19-127)

Check for continuity between the modulator unit 14P connector No. 1 (YEL/BLK) and No. 12 (RED/BLK) terminals.

MODULATOR UNIT 14P CONNECTOR (MODULATOR UNIT SIDE)

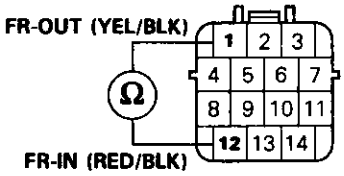

WIRE SIDE OF FEMALE TERMINALS

Is there continuity?

- YES → **Replace the modulator wire harness. (Short to the RED/BLK wire in the YEL/BLK wire.)**
- NO ↓

Disconnect the ABS control unit 26P connector.

Check for continuity between the ABS control unit 26P connector No. 15 (YEL/BLK) terminal and body ground.

ABS CONTROL UNIT 26P CONNECTOR

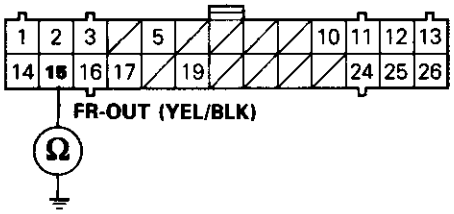

WIRE SIDE OF FEMALE TERMINALS

Is there continuity?

- YES → **Repair short to body ground in the YEL/BLK wire between the ABS control unit and modulator unit.**
- NO ↓

Check for continuity between the ABS control unit 26P connector No. 2 (RED/BLK)terminal and body ground.

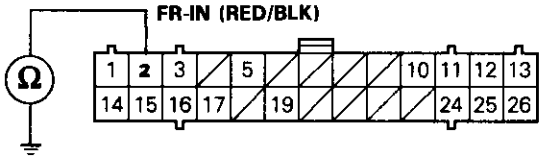

Is there continuity?

- YES → **Repair short to body ground in the RED/BLK wire between the ABS control unit and modulator unit.**
- NO ↓

Check for continuity between the ABS control unit 26P connector No. 2 (RED/BLK) and No. 15 (YEL/BLK) terminals.

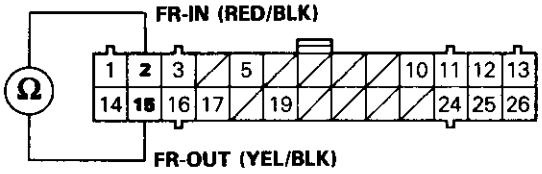

Is there continuity?

- YES → **Repair short to the YEL/BLK wire in the RED/BLK wire between the ABS control unit and modulator unit.**
- NO ↓

(To page 19-129)

(From page 19-128)

Connect the modulator unit 14P connector.

Measure the voltage between the ABS control unit 26P connector No. 15 (YEL/BLK) terminal and body ground.

Is there battery voltage?

NO → **Repair open in the YEL/BLK wire between the ABS control unit and modulator unit.**

YES

Measure the voltage between the ABS control unit 26P connector No. 2 (RED/BLK) terminal and body ground.

Is there battery voltage?

NO → **Repair open in the RED/BLK wire between the ABS control unit and modulator unit.**

YES

Check for continuity between the ABS control unit 26P connector No. 12 (BLK) terminal and body ground.

Is there continuity?

NO → **Repair open in the BLK wire between the ABS control unit and body ground, or a poor ground.**

YES

Check for loose ABS control unit connectors. If necessary, substitute a known-good ABS control unit and recheck.

ABS CONTROL UNIT 26P CONNECTOR

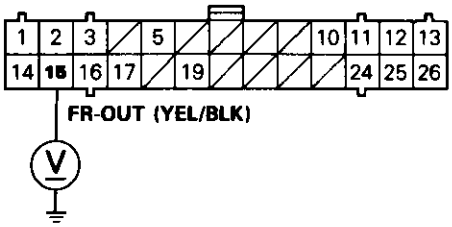

WIRE SIDE OF FEMALE TERMINALS

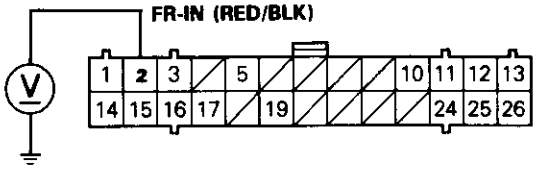

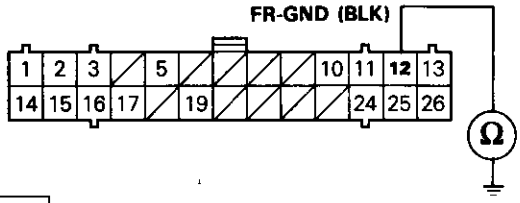

Left-front Solenoid

Diagnostic Trouble Code (DTC) 7-2: Left-front Solenoid Diagnosis

During the initial diagnosis, after the fail-safe relays are turned on, and during the regular diagnosis, the ABS control unit monitors the voltage from the battery for the six solenoids (when the ABS is not functioning).
If the detection circuit for the left-front solenoid detects 0 V, the ABS control unit keeps the ABS indicator light on after the engine is started. It turns the ABS indicator light on again if it detects 0 V after the light goes off.
Possible causes:

- Front fail-safe relay stuck OFF
- Open circuit in the left-front solenoid drive circuits between the under-hood ABS fuse/relay box and ABS control unit
- Short circuit to body ground in the left-front solenoid drive circuits between the solenoids and ABS control unit
- Faulty left-front solenoid drive transistor (ON) in the ABS control unit

The ABS control unit momentarily outputs the ON signal to each solenoid (too momentary to turn the solenoid on) during the initial diagnosis, and each time the car is started, to check the voltage from the battery with the detection circuit. If the detection circuit for the left-front solenoids detects battery voltage at this time, the ABS control unit keeps the ABS indicator light on. It turns the ABS indicator light on again if it detects the battery voltage when the car is started.
Possible causes:

- Short circuit to power in the left-front solenoid drive circuits between the solenoids and ABS control unit
- Faulty left-front solenoid drive transistor (OFF) in the ABS control unit
- Short circuit to power in the left-front solenoid drive circuits in the modulator wire harness or solenoids
- Short circuit to the left-front solenoid outlet circuit in the inlet circuit between the solenoids and ABS control unit
- Short circuit to the right-front solenoid inlet or outlet circuit in the left-front solenoid inlet or outlet circuit between the solenoids and ABS control unit

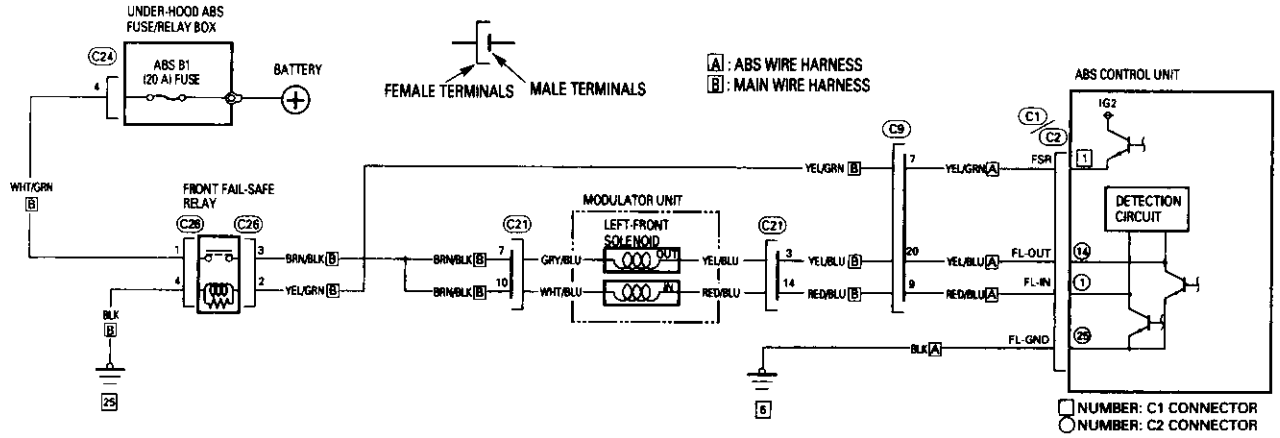

C1 22P ORN

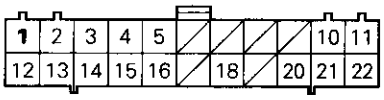

C26 4P ORN

C21 14P ORN

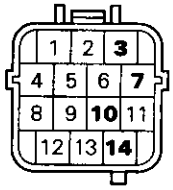

C2 26P ORN

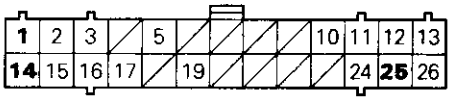

C24 4P ORN

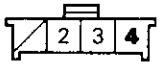

TERMINAL SIDE OF MALE TERMINALS

C9 22P ORN

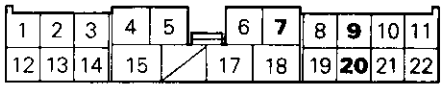

WIRE SIDE OF FEMALE TERMINALS

5 / 25 GROUND

– With engine running, ABS indicator light is ON.
– With the SCS short connector connected (see page 19-56), DTC 7-2 is indicated.

Start the engine.

Does the ABS indicator light go off?

YES → **The system is OK at this time. Check the wire harness and connectors between the ABS control unit, fail-safe relay and modulator unit (intermittent open or short circuit).**

NO

Confirm the ABS code that appears first.

Is code 7-2 indicated?

NO → **Perform the appropriate troubleshooting for the code.**

YES

Check the ABS B1 (20A) fuse in the under-hood ABS fuse/relay box.

UNDER-HOOD ABS FUSE/RELAY BOX

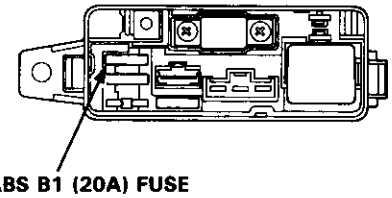

Is the fuse OK?

YES → (To page 19-133)

NOTE: Reinstall the fuse if it is OK.

NO

Measure the voltage between the ABS B1 fuse terminals on the under-hood ABS fuse/relay box.

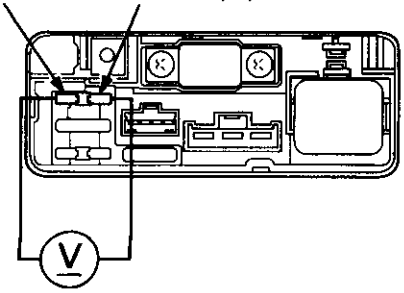

Is there battery voltage?

NO → (To page 19-132)

YES

Disconnect the under-hood ABS fuse/relay box 4P connector.

Measure the voltage between the ABS B1 fuse terminals on the under-hood ABS fuse/relay box.

Is there battery voltage?

NO → **Repair short to body ground in the WHT/GRN wire between the under-hood ABS fuse/relay box and front fail-safe relay.**

YES

Replace the under-hood ABS fuse/relay box. (Short to body ground in the fuse box.)

(cont'd)

Left-front Solenoid (cont'd)

(From page 19-131)

Disconnect the modulator unit 14P connector.

Install a new ABS B1 (20A) fuse in the under-hood fuse/relay box.

Disconnect the front fail-safe relay connector.

Wire colors of the front fail-safe relay connector: WHT/GRN, BRN/BLK, YEL/GRN, BLK

FRONT FAIL-SAFE RELAY CONNECTOR

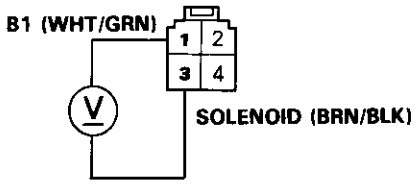

WIRE SIDE OF FEMALE TERMINALS

Measure the voltage between the front fail-safe relay connector No. 1 (WHT/GRN) (+) and No. 3 (BRN/BLK) (−) terminals.

Is there battery voltage?

YES → **Repair short to the body ground in the BRN/BLK wire between the front fail-safe relay and modulator unit.**

NO

Check for continuity between the following terminals of the modulator unit 14P connector and body ground.
- −No. 5 (GRY/BLK): Right-front outlet +B
- −No. 7 (GRY/BLU): Left-front outlet +B
- −No. 8 (WHT/BLK): Right-front inlet +B
- −No. 10 (WHT/BLU): Left-front inlet +B

MODULATOR UNIT 14P CONNECTOR (MODULATOR UNIT SIDE)

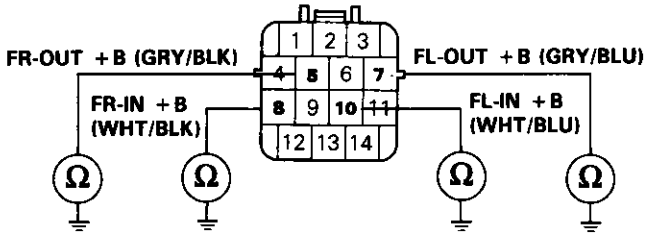

Is there continuity?

YES → **Visually inspect the modulator wire harness. If the harness is OK, replace the modulator unit.**

NO

Connect the modulator unit 14P connector and front fail-safe relay connector, and recheck.

(From page 19-131)

Measure the voltage between the under-hood ABS fuse/relay box 4P connector No. 4 (WHT/GRN) terminal and body ground.

UNDER-HOOD ABS FUSE/RELAY BOX 4P CONNECTOR

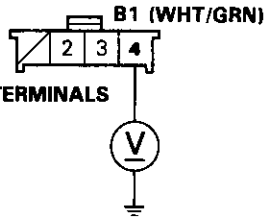

Is there battery voltage?

NO → **Replace the under-hood ABS fuse/relay box. (Internal open)**

YES

Disconnect the front fail-safe relay connector.

Wire colors of the front fail-safe relay connector: WHT/GRN, BRN/BLK, YEL/GRN, BLK

Measure the voltage between the front fail-safe relay connector No. 1 (WHT/GRN) terminal and body ground.

FRONT FAIL-SAFE RELAY CONNECTOR

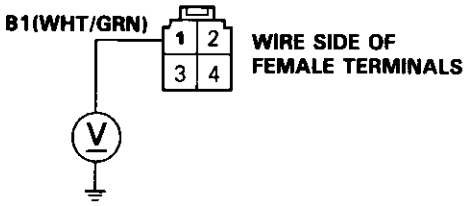

Is there battery voltage?

NO → **Repair open in the WHT/GRN wire between the under-hood ABS fuse/relay box and front fail-safe relay.**

YES

Check the front fail-safe relay (see page 19-157).

Is the relay OK?

NO → **Replace the front fail-safe relay.**

YES

Disconnect the modulator unit 14P connector.

Connect the front fail-safe relay connector No. 1 (WHT/GRN) and No. 3 (BRN/BLK) terminals using a jumper wire.

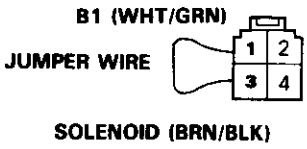

(To page 19-134)

(cont'd)

Left-front Solenoid (cont'd)

(From page 19-133)

Measure the voltage between the modulator unit 14P connector No. 7 (BRN/BLK) terminal and body ground.

Is there battery voltage?

- NO → **Repair open in the BRN/BLK wire between the front fail-safe relay and modulator unit.**
- YES ↓

Measure the voltage between the modulator unit 14P connector No. 10 (BRN/BLK) terminal and body ground.

Is there battery voltage?

- NO → **Repair open in the BRN/BLK wire between the front fail-safe relay and modulator unit.**
- YES ↓

Measure the resistance between modulator unit 14P connector No. 3 (YEL/BLU) and No. 7 (GRY/BLU) terminals.

Is the resistance 2.5–2.9Ω?

- NO → **Visually inspect the modulator wire harness. If the wire harness is OK, replace the modulator unit. (Open or short in the left-front outlet solenoid)**
- YES ↓

Check for continuity between the modulator unit 14P connector No. 3 (YEL/BLU) terminal and body ground.

Is there continuity?

- YES → **Visually inspect the modulator wire harness. If the wire harness is OK, replace the modulator unit. (Short to body ground in the left-front outlet solenoid)**
- NO ↓

(To page 19-135)

MODULATOR UNIT 14P CONNECTOR (ABS CONTROL UNIT SIDE)

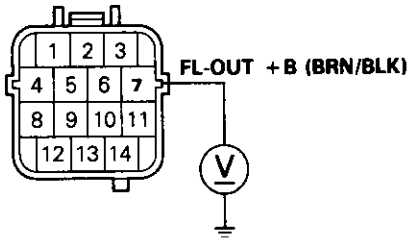

TERMINAL SIDE OF MALE TERMINALS

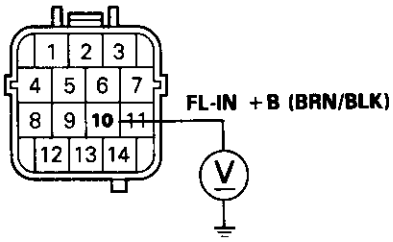

MODULATOR UNIT 14P CONNECTOR (MODULATOR UNIT SIDE)

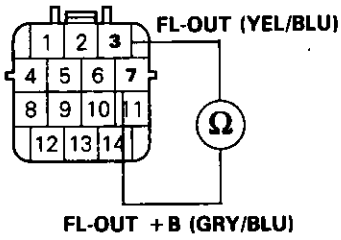

WIRE SIDE OF FEMALE TERMINALS

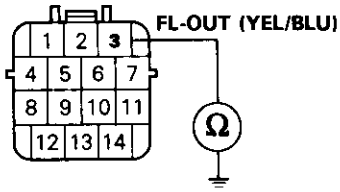

(From page 19-134)

Measure the resistance between modulator unit 14P connector No. 10 (WHT/BLU) and No. 14 (RED/BLU) terminals.

Is the resistance 2.5–2.9Ω?

NO → **Visually inspect the modulator wire harness. If the harness is OK, replace the modulator unit. (Open or short in the left-front inlet solenoid)**

YES

ODULATOR UNIT 14P CONNECTOR
IODULATOR UNIT SIDE)

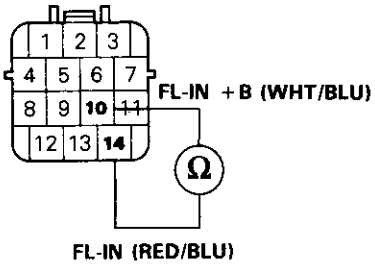

WIRE SIDE OF FEMALE TERMINALS

Check for continuity between the modulator unit 14P connector No. 14 (RED/BLU) terminal and body ground.

Is there continuity?

YES → **Visually inspect the modulator wire harness. If the harness is OK, replace the modulator unit. (Short to body ground in the left-front inlet solenoid)**

NO

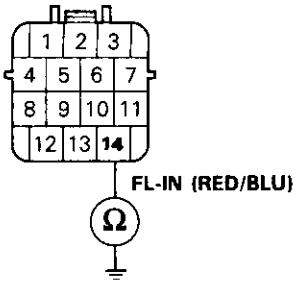

Check for continuity between the modulator unit 14P connector No. 14 (RED/BLU) terminal and following terminals:
- No. 3 (YEL/BLU): Left-front outlet
- No. 12 (RED/BLK): Right-front inlet
- No. 1 (YEL/BLK): left-front outlet

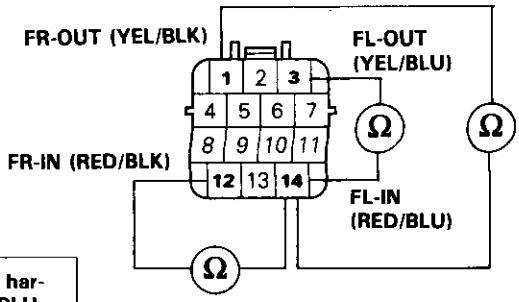

Is there continuity?

YES → **Replace the modulator wire harness. (Short to the YEL/BLU, RED/BLK or YEL/BLK wire in the RED/BLU wire)**

NO

Check for continuity between the modulator unit 14P connector No. 3 (YEL/BLU) terminal and following terminals:
- No. 12 (RED/BLK): Right-front inlet
- No. 1 (YEL/BLK): Left-front outlet

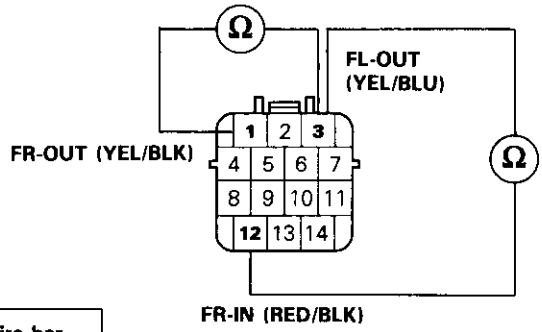

Is there continuity?

YES → **Replace the modulator wire harness. (Short to the RED/BLK or YEL/BLK wire in the YEL/BLU wire)**

NO

(To page 19-136)

(cont'd)

Left-front Solenoid (cont'd)

(From page 19-135)

Disconnect the ABS control unit 26P connector.

Check for continuity between the ABS control unit 26P connector No. 14 (YEL/BLU) terminal and body ground.

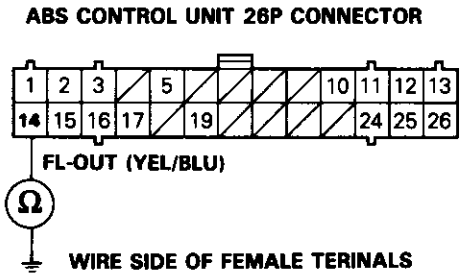

Is there continuity?

- YES → **Repair short to body ground in the YEL/BLU wire between the ABS control unit and modulator unit.**
- NO ↓

Check for continuity between the ABS control unit 26P connector No. 1 (RED/BLU) terminal and body ground.

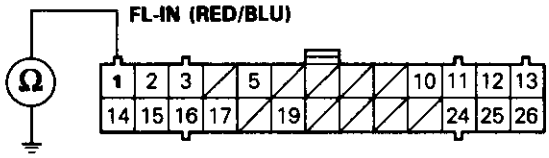

Is there continuity?

- YES → **Repair short to body ground in the RED/BLU wire between the ABS control unit and modulator unit.**
- NO ↓

Check for continuity between the ABS control unit 26P connector No. 1 (RED/BLU) and following terminals.
- —No. 14 (YEL/BLU): Left-front outlet
- —No. 2 (RED/BLK): right-front inlet
- —No. 15 (YEL/BLK): Left-front outlet

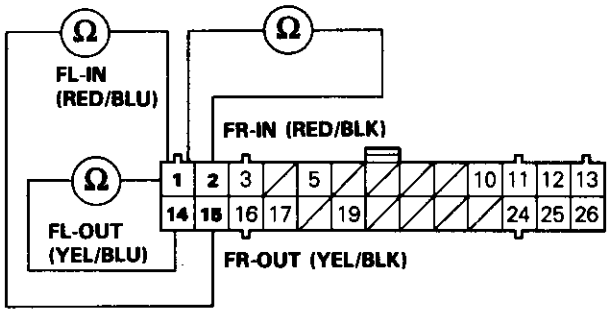

Is there continuity?

- YES → **Repair short to the YEL/BLU, RED/BLK or YEL/BLK wire in the RED/BLU wire between the ABS control unit and modulator unit.**
- NO ↓

Check for continuity between the ABS control unit 26P connector No. 14 (YEL/BLU) and following terminals.
- —No. 2 (RED/BLK): Right-front inlet
- —No. 15 (YEL/BLK): Left-front outlet

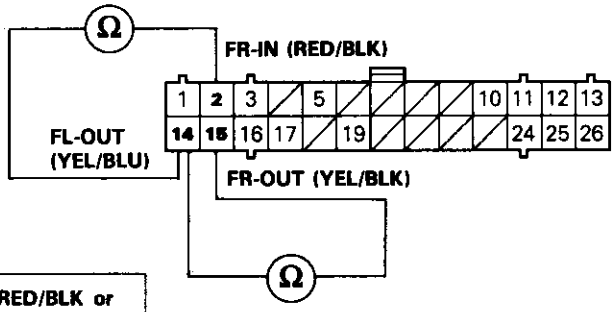

Is there continuity?

- YES → **Repair short to the RED/BLK or YEL/BLK wire in the YEL/BLU wire between the ABS control unit and modulator unit.**
- NO ↓

(To page 19-137)

(From page 19-136)

Connect the modulator unit 14P connector.

Measure the voltage between the ABS control unit 26P connector No. 14 (YEL/BLU) terminal and body ground.

Is there battery voltage?

NO → **Repair open in the YEL/BLU wire between the ABS control unit and modulator unit.**

YES

Measure the voltage between the ABS control unit 26P connector No. 1 (RED/BLU) terminal and body ground.

Is there battery voltage?

NO → **Repair open in the RED/BLU wire between the ABS control unit and modulator unit.**

YES

Check for continuity between the ABS control unit 26P connector No. 25 (BLK) terminal and body ground.

Is there continuity?

NO → **Repair open in the BLK wire between the ABS control unit and body ground, or a poor ground.**

YES

Disconnect the ABS control unit 22P connector.

Connect the ABS control unit 22P connector No. 1 terminal to body ground with a jumper wire.

Remove the jumper wire from the front fail-safe relay.

(To page 19-138)

ABS CONTROL UNIT 26P CONNECTOR

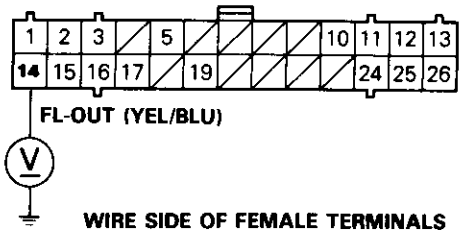

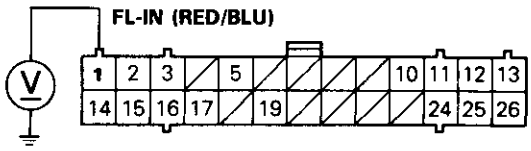

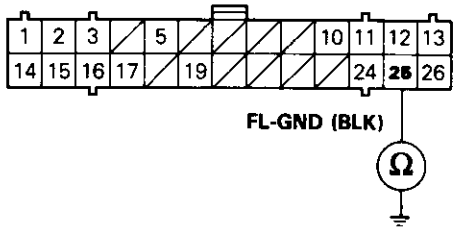

ABS CONTROL UNIT 22P CONNECTOR

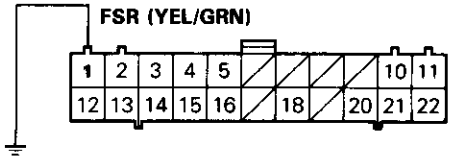

WIRE SIDE OF FEMALE TERMINALS

(cont'd)

Left-front Solenoid (cont'd)

(From page 19-137

Disconnect the rear fail-safe relay connector.

Check for continuity between the front fail-safe relay connector No. 2 (YEL/GRN) terminal and body ground.

Is there continuity?

NO → **Repair open in the YEL/GRN wire between the ABS control unit and front fail-safe relay.**

YES ↓

Remove the jumper wire from the ABS control unit 22P connector No. 1 (YEL/GRN) terminal.

Check for continuity between the front fail-safe relay connector No. 2 (YEL/GRN) terminal and body ground.

Is there continuity?

YES → **Repair short to body ground in the YEL/GRN wire between the ABS control unit and front fail-safe relay.**

NO ↓

Check for continuity between the front fail-safe relay connector No. 4 (BLK) terminal and body ground.

Is there continuity?

NO → **Repair open in the BLK wire between the front fail-safe relay and body ground, or poor ground.**

YES ↓

Check for loose ABS control unit connectors. If necessary, substitute a known-good ABS control unit and recheck.

FRONT FAIL-SAFE RELAY CONNECTOR

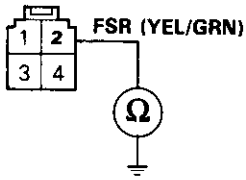

WIRE SIDE OF FEMALE TERMINALS

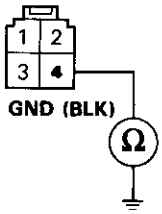

Rear Solenoid

Diagnostic Trouble Code (DTC) 7-4: Rear Solenoid Diagnosis

During the initial diagnosis, after the fail-safe relays are turned on, and during the regular diagnosis, the ABS control unit monitors the voltage from the battery for the six solenoids (when the ABS is not functioning).
If the detection circuit for the rear solenoids detects 0 V, the ABS control unit keeps the ABS indicator light on after the engine is started. It turns the ABS indicator light on again if it detects 0 V after the light goes off.
Possible causes:

- Rear fail-safe relay stuck OFF
- Open circuit in the rear solenoid drive circuits between the under-hood ABS fuse/relay box and ABS control unit
- Short circuit to body ground in the rear solenoid drive circuits between the solenoids and ABS control unit
- Faulty rear solenoid drive transistor (ON) in the ABS control unit

The ABS control unit momentarily outputs the ON signal to each solenoid (too momentary to turn the solenoid on) during the initial diagnosis, and each time the car is started, to check the voltage from the battery with the detection circuit. If the detection circuit for the rear solenoids detects battery voltage at this time, the ABS control unit keeps the ABS indicator light on. It turns the ABS indicator light on again if it detects the battery voltage when the car is started.
Possible causes:

- Short circuit to power in the rear solenoid drive circuits between the solenoids and ABS control unit
- Faulty rear solenoid drive transistor (OFF) in the ABS control unit
- Short circuit to power in the rear solenoid drive circuits in the modulator wire harness or solenoids
- Short circuit to the rear solenoid outlet circuit in the inlet circuit between the solenoids and ABS control unit
- Short circuit to the right-front or left-front solenoid inlet or outlet circuit in the rear solenoid inlet or outlet circuit between the solenoids and ABS control unit

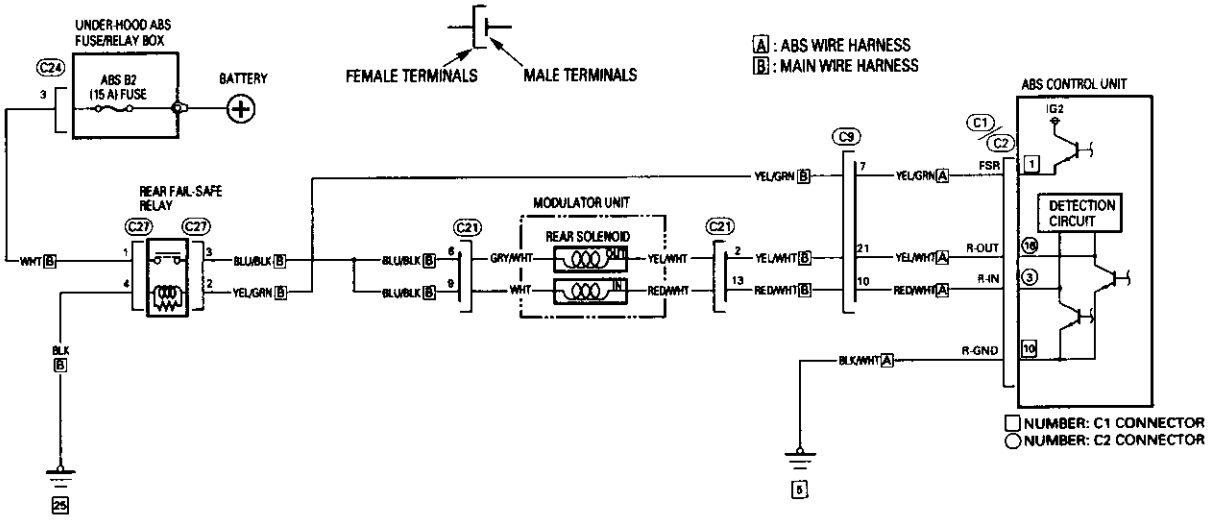

C1 22P ORN

1	2	3	4	5					**10**	11
12	13	14	15	16		18		20	21	22

C2 26P ORN

1	2	**3**		5					10	11	12	13
14	15	**16**	17		19					24	25	26

C9 22P ORN

1	2	3	4	5	6	**7**	8	9	**10**	11
12	13	14	15		17	18	19	20	**21**	22

WIRE SIDE OF FEMALE TERMINALS

C27 4P ORN

1	**2**
3	**4**

C24 4P ORN

	2	**3**	4

C21 14P ORN

	1	**2**	3
4	5	**6**	7
8	**9**	10	11
	12	**13**	14

TERMINAL SIDE OF MALE TERMINALS

5 / 25 GROUND

(cont'd)

Rear Solenoid (cont'd)

– With engine running, ABS indicator light is ON.
– With the SCS short connector connected (see page 19-56), DTC 7-4 is indicated.

Start the engine.

Does the ABS indicator light go off?

YES → **The system is OK at this time. Check the wire harness and connectors between the ABS control unit, fail-safe relay and modulator unit (intermittent open or short circuit).**

NO

Confirm the ABS code that appears first.

Is code 7-4 indicated?

NO → **Perform the appropriate troubleshooting for the code.**

YES

Disconnect the rear fail-safe relay connecor.

Wire colors of the rear fail-safe relay connector: WHT, BLU/BLK, YEL/GRN, BLK

Measure the voltage between the rear fail-safe relay connector No. 1 (WHT) terminal and body ground.

REAR FAIL-SAFE RELAY CONNECTOR

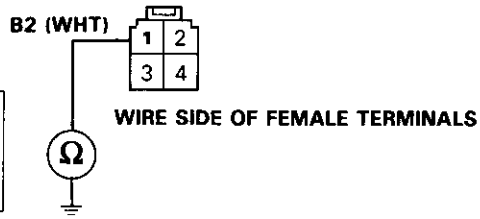

WIRE SIDE OF FEMALE TERMINALS

Is there battery voltage?

NO → **Repair open in the WHT wire between the under-hood ABS fuse/relay box and rear fail-safe relay.**

YES

Check the rear fail-safe relay (see page 19-157).

Is the relay OK?

NO → **Replace the rear fail-safe relay.**

YES

Disconnect the modulator unit 14P connector.

(To page 19-141)

(From page 19-140)

Connect the rear fail-safe relay connector No. 1 (WHT) and No. 3 (BLU/BLK) terminals using a jumper wire.

Measure the voltage between the modulator unit 14P connector No. 6 (BLU/BLK) terminal and body ground.

Is there battery voltage?

- NO → **Repair open in the BLU/BLK wire between the rear fail-safe relay and modulator unit.**
- YES ↓

Measure the voltage between the modulator unit 14P connector No. 9 (BLU/BLK) terminal and body ground.

Is there battery voltage?

- NO → **Repair open in the BLU/BLK wire between the rear fail-safe relay and modulator unit.**
- YES ↓

Measure the resistance between modulator unit 14P connector No. 2 (YEL/WHT) and No. 6 (GRY/WHT) terminals.

Is the resistance 2.5–2.9 Ω?

- NO → **Visually inspect the modulator wire harness. If the harness is OK, replace the modulator unit. (Open or short in the rear outlet solenoid)**
- YES ↓

Check for continuity between the modulator unit 14P connector No. 2 (YEL/WHT) terminal and body ground.

Is there continuity?

- YES → **Visually inspect the modulator wire harness. If the harness is OK, replace the modulator unit. (Short to body ground in the rear outlet solenoid)**
- NO ↓

(To page 19-142)

REAR FAIL-SAFE RELAY CONNECTOR

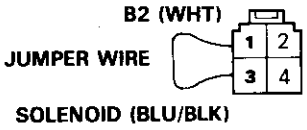

MODULATOR UNIT 14P CONNECTOR (ABS CONTROL UNIT SIDE)

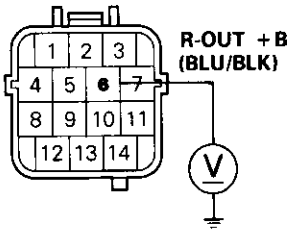

TERMINAL SIDE OF MALE TERMINALS

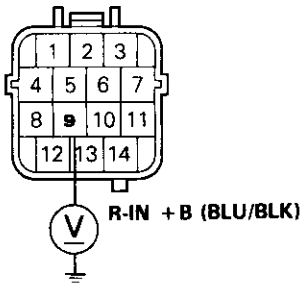

MODULATOR UNIT 14P CONNECTOR (MODULATOR UNIT SIDE)

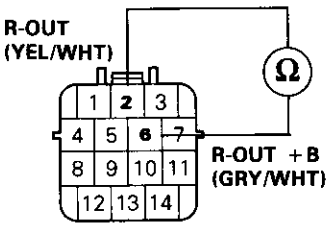

WIRE SIDE OF FEMALE TERMINALS

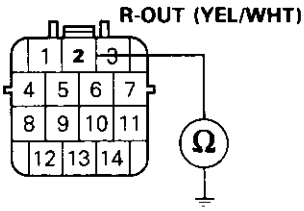

(cont'd)

Rear Solenoid (cont'd)

(From page 19-141)

Measure the resistance between modulator unit 14P connector No. 9 (WHT) and No. 14 (RED/WHT) terminals.

Is the resistance 2.5–2.9 Ω?

NO → **Visually inspect the modulator wire harness. If the harness is OK, replace the modulator unit. (Open or short in the rear inlet solenoid)**

YES

Check for continuity between the modulator unit 14P connector No. 13 (RED/WHT) terminal and body ground.

Is there continuity?

YES → **Visually inspect the modulator wire harness. If the harness is OK, replace the modulator unit. (Short to body ground in the rear inlet solenoid)**

NO

Check for continuity between the modulator unit 14P connector No. 2 (YEL/WHT) and No. 13 (RED/WHT) terminals.

Is there continuty?

YES → **Replace the modulator wire harness. (Short to the RED/WHT wire in the YEL/WHT wire)**

NO

Check for continuity between the modulator unit 14P connecor No. 13 (RED/WHT) terminal and following terminals:
- No. 12 (RED/BLK): Right-front inlet
- No. 1 (YEL/BLK): Right-front outlet
- No. 14 (RED/BLU): Left-front inlet
- No. 3 (YEL/BLU): Left-front outlet

Is there continuity?

YES → **Replace the modulator wire harness. (Short to the RED/BLK, YEL/BLK, RED/BLU or YEL/BLU wire in the RED/WHT wire)**

NO

(To page 19-143)

MODULATOR UNIT 14P CONNECTOR (MODULATOR UNIT SIDE)

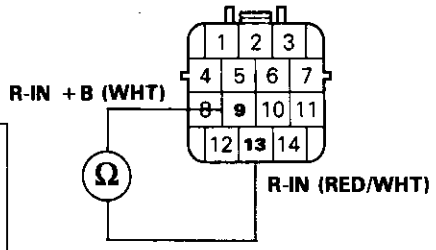

WIRE SIDE OF FEMALE TERMINALS

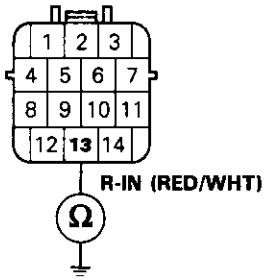

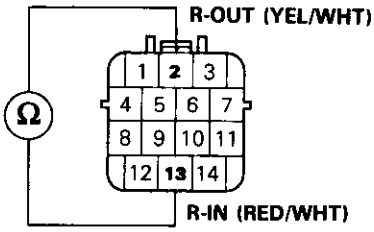

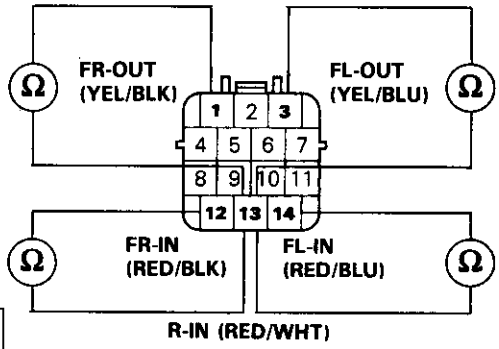

(From page 19-142)

Check for continuity between the modulator unit 14P connector No. 2 (YEL/WHT) terminal and following terminals:
- No. 12 (RED/BLK): Right-front inlet
- No. 1 (YEL/BLK): Right-front outlet
- No. 14 (RED/BLU): Left-front inlet
- No. 3 (YEL/BLU): Front-left outlet

MODULATOR UNIT 14P CONNECTOR (MODULATOR UNIT SIDE)

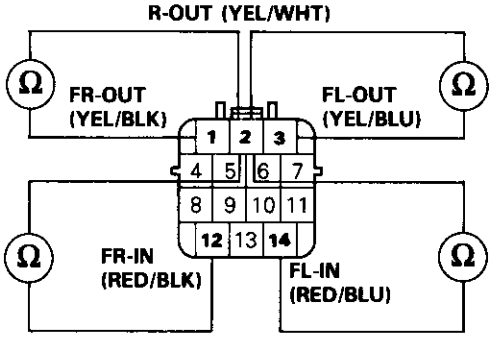

WIRE SIDE OF FEMALE TERMINALS

Is there continuity?

YES → **Replace the modulator wire harness. (Short to the RED/BLK, YEL/BLK, RED/BLU or YEL/BLU wire in the YEL/WHT wire)**

NO

Disconnect the ABS control unit 26P connector.

Check for continuity between the ABS control unit 26P connector No. 16 (YEL/WHT) terminal and body ground.

ABS CONTROL UNIT 26P CONNECTOR

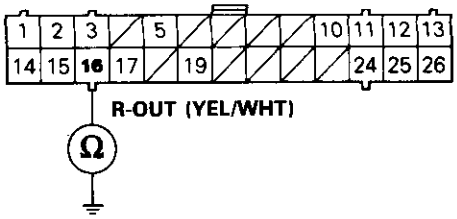

WIRE SIDE OF FEMALE TERMINALS

Is there continuity?

YES → **Repair short to body ground in the YEL/WHT wire between the ABS control unit and modulator unit.**

NO

Check for continuity between the ABS control unit 26P connector No. 3 (RED/WHT) terminal and body ground.

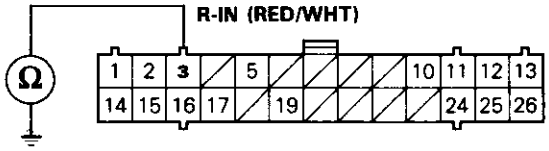

Is there continuity?

YES → **Repair short to body ground in the RED/WHT wire between the ABS control unit and modulator unit.**

NO

Check for continuity between the ABS control unit 26P connector No. 3 (RED/WHT) and No. 16 (YEL/WHT) terminals.

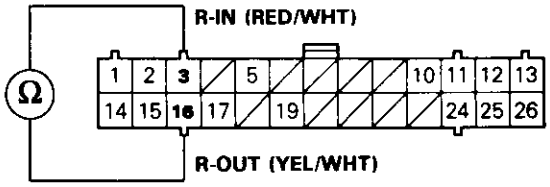

Is there continuity?

YES → **Repair short to the YEL/WHT wire in the RED/WHT wire between the ABS control unit and modulator unit.**

NO

(To page 19-144)

(cont'd)

Rear Solenoid (cont'd)

(From page 19-143)

Check for continuity between the ABS control unit 26P connector No. 3 (RED/WHT) and following terminals:
- No. 2 (RED/BLK): Right-front inlet
- No. 15 (YEL/BLK): Right-front outlet
- No. 1 (RED/BLU): Left-front inlet
- No. 14 (YEL/BLU): Left-front outlet

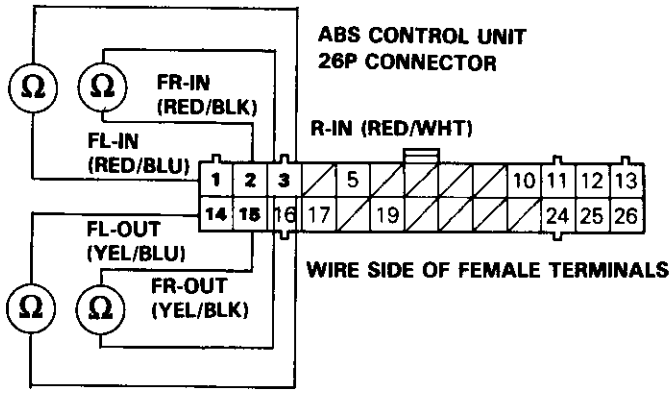

Is there continuity?

YES → **Repair short to the RED/BLK, YEL/BLK, RED/BLU or YEL/BLU wire in the RED/WHT wire between the ABS control unit and modulator unit.**

NO

Check for continuity between the ABS control unit 26P connector No. 16 (YEL/WHT) and following terminals:
- No. 2 (RED/BLK): Right-front inlet
- No. 15 (YEL/BLK): Right-front outlet
- No. 1 (RED/BLU): Left-front inlet
- No. 14 (YEL/BLU): Left-front outlet

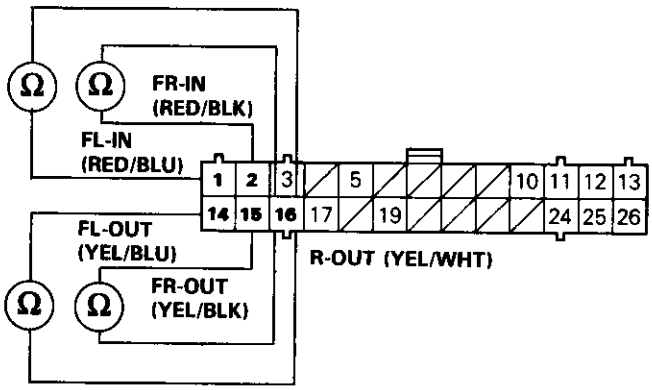

Is there continuity?

YES → **Repair short to the RED/BLK, YEL/BLK, RED/BLU or YEL/BLU wire in the YEL/WHT wire between the ABS control unit and modulator unit.**

NO

Connect the modulator unit 14P connector.

Measure the voltage between the ABS control unit 26P connector No. 16 (YEL/WHT) terminal and body ground.

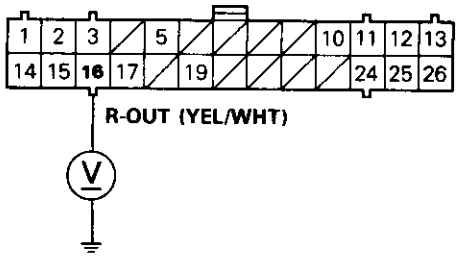

Is there battery voltage?

NO → **Repair open in the YEL/WHT wire between the ABS control unit and modulator unit.**

YES

(To page 19-145)

(From page 19-144)

Measure the voltage between the ABS control unit 26P connector No. 1 (RED/WHT) terminal and body ground.

ABS CONTROL UNIT 26P CONNECTOR

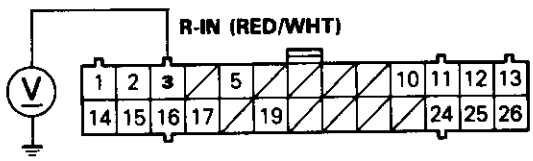

WIRE SIDE OF FEMALE TERMINALS

Is there battery voltage?

NO → **Repair open in the RED/WHT wire between the ABS control unit and modulator unit.**

YES

Check for continuity between the ABS control unit 22P connector No. 10 (BLK) terminal and body ground.

ABS CONTROL UNIT 22P CONNECTOR

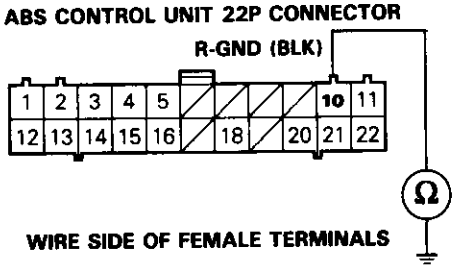

WIRE SIDE OF FEMALE TERMINALS

Is there continuity?

NO → **Repair open in the BLK wire between the ABS control unit and body ground, or a poor ground.**

YES

Disconnect the ABS control unit 22P connector.

Connect the ABS control unit 22P connector No. 1 terminal to body ground with a jumper wire.

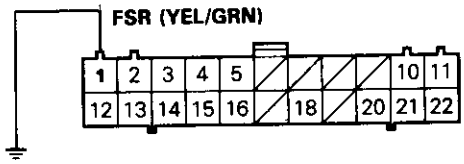

Remove the jumper wire from the rear fail-safe relay.

Disconnect the front fail-safe relay connector.

REAR FAIL-SAFE RELAY CONNECTOR

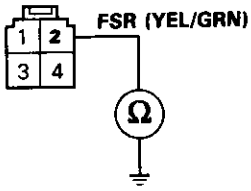

WIRE SIDE OF FEMALE TERMINALS

Check for continuity between the rear fail-safe relay connector No. 2 (YEL/GRN) terminal and body ground.

Is there continuity?

NO → **Repair open in the YEL/GRN wire between the ABS control unit and rear fail-safe relay.**

YES

(To page 19-146)

(cont'd)

Rear Solenoid (cont'd)

(From page 19-145)

Remove the jumper wire from the ABS control unit 22P connector No. 1 (YEL/GRN) terminal.

Check for continuity between the rear fail-safe relay connector No. 2 (YEL/GRN) terminal and body ground.

Is there continuity?

YES → **Repair short to body ground in the YEL/GRN wire between the ABS control unit and rear fail-safe relay.**

NO

Check for continuity between the rear fail-safe relay connector No. 4 (BLK) terminal and body ground.

Is there continuity?

NO → **Repair open in the BLK wire between the rear fail-safe relay and body ground, or poor ground.**

YES

Check for loose ABS control unit connectors. If necessary, substitute a known-good ABS control unit and recheck.

REAR FAIL-SAFE RELAY CONNECTOR

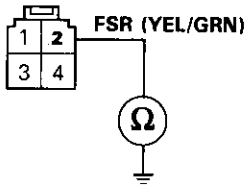

WIRE SIDE OF FEMALE TERMINALS

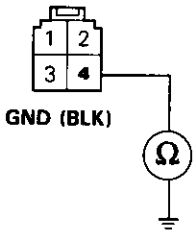

ABS Function

Diagnostic Trouble Code (DTC) 8-1: ABS Function Diagnosis

The ABS control unit monitors the ABS functioning time during regular diagnosis, and it turns the ABS indicator light on if the ABS is functioning for a prolonged time.
Possible causes:

- Wheel sensor signal disappears at speeds of 6 mph (10 km/h) or less
- Faulty ABS control unit

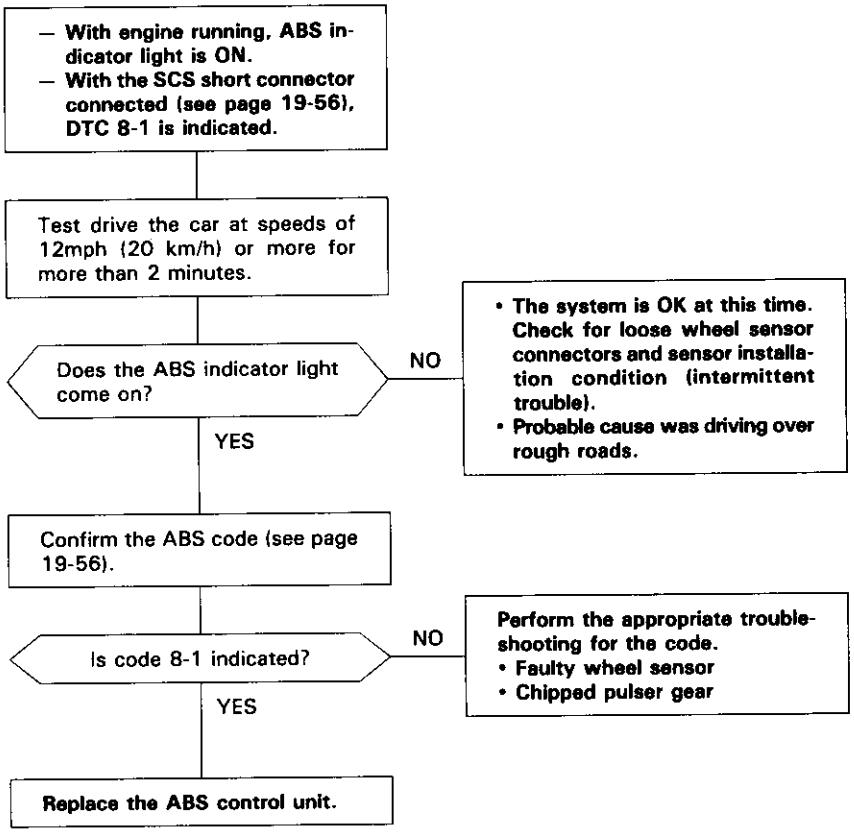

ABS Control Unit

Diagnostic Trouble Code (DTC) 8-2: CPU Comparison Diagnosis

The ABS control unit checks the data of the two CPUs by comparison, and it keeps the ABS indicator light on if there are any differences in the data between the CPUs. It turns the ABS indicator light on again if it detects any difference after the light goes off.

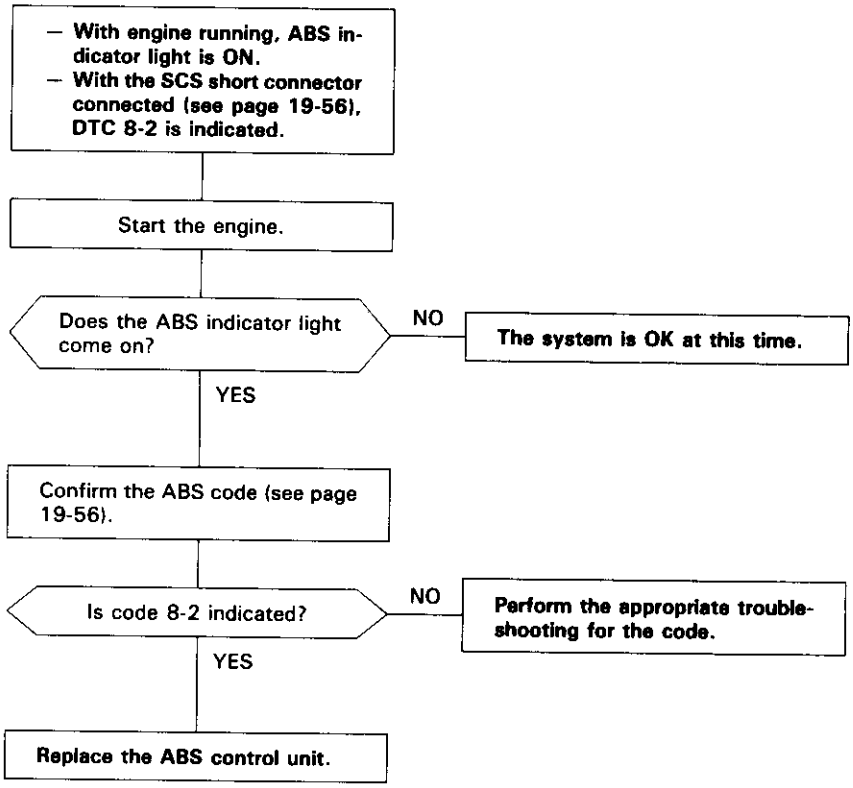

Diagnostic Trouble Code (DTC) 8-4: IC (Integrated Circuit) Diagnosis

The ABS control unit checks the internal ICs during the initial diagnosis and regular diagnosis, and it keeps the ABS indicator light on if it detects any abnormality. It turns the ABS indicator light on again if it detects any abnormality after the light goes off.

Replace the ABS control unit if DTC 8-4 is indicated with the SCS short connector connected (see page 19-56).

1. Raise the car off the ground and support it with safety stands (see section 1).

2. Check that there is no brake drag.

3. Turn the ignition switch ON and confirm that the ABS indicator light comes on.

   - If the ABS indicator light does not come on, follow the troubleshooting on page 19-62.

4. With the ignition switch OFF, disconnect the ABS inspection connector (6P) from the connector cover located on the cross-member under the passenger's seat, and connect it to the ALB checker.

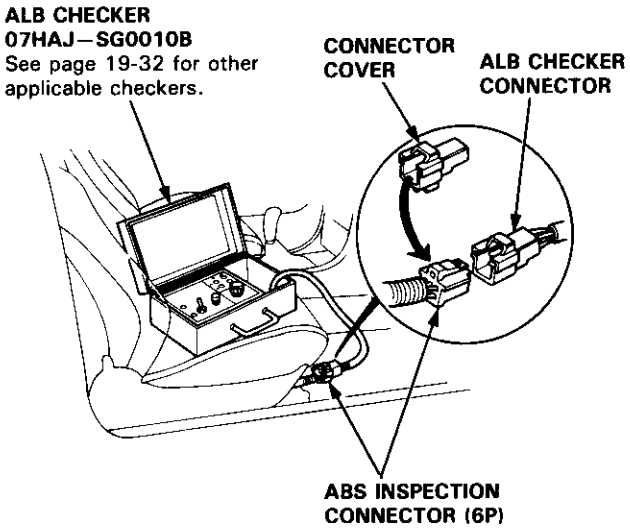

5. Shift the transmission to neutral for manual transmission models, or to [P] position for automatic transmission models.

6. Start the engine and release the parking brake.

7. Turn the Mode Selector switch to "1".

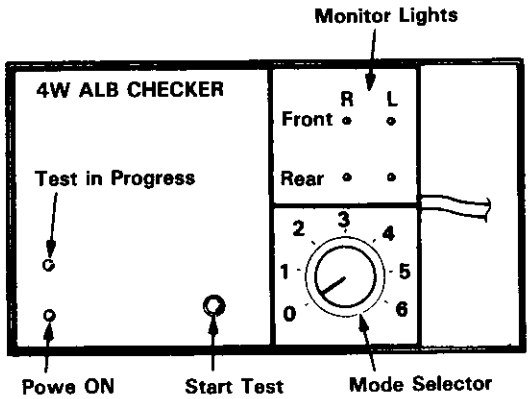

8. Push the Start Test switch.
   The ABS indicator light should not come on while the Test in Progress light is on.

   - If the ABS indicator light comes on, confirm the ABS code and perform the appropriate troubleshooting for the code.

   NOTE: Do not turn the Mode Selector switch when the Test in Progress light is on. Damage to the ALB checker can result.

9. Turn the Mode Selector switch to "2".

10. Depress the brake pedal firmly and push the Start Test switch.
    The ABS indicator light should not come on while the Test in Progress light is on. There should be kickback on the brake pedal.

    Have the assistant check that the wheel controlled by the ABS can be rotated by hand when there is kickback on the brake pedal.

    - If the ABS indicator light comes on, confirm the ABS code and perform the appropriate troubleshooting for the code.
    - If the ABS indicator light does not come on and the wheel controlled by the ABS cannot be rotated, check the connection of the modulator wire harness connectors. If the connections are OK, replace the modulator unit.

    NOTE: The kickback should occur approximately 20 seconds after the Start Test switch is pushed. The ABS can be checked with a brake tester, too, by checking the brake torque fluctuation of the wheel controlled by the ABS.

11. Turn the Mode Selector switch to "3", "4" and "5". Perform the step 10 for each of the test mode positions.

(cont'd)

Operation Sequence Simulated by Modes of ALB Checker

NOTE: The wheel sensors and sensor wire harnesses are not checked by the ALB checker.

Mode 1: Sends the simulated driving signal 0 mph (0 km/h) → 113 mph (180 km/h) → 0 mph (0 km/h) of each wheel to the ABS control unit to check the system under the normal driving. There should be no kickback.

SIMULATED DRIVING SIGNAL

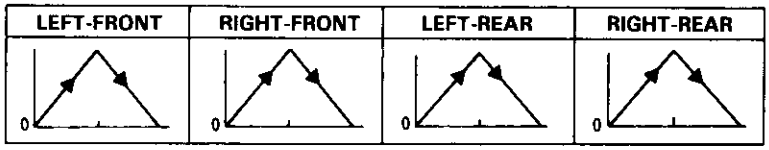

Mode 2: Sends the driving signal of each wheel, then sends the lock signal of the left-rear wheel to the ABS control unit to check the system under left-rear wheel lock. There should be kickback.

SIMULATED DRIVING SIGNAL

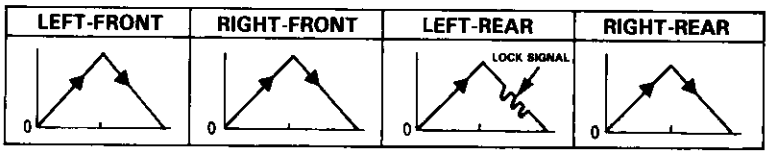

Mode 3: Sends the driving signal of each wheel, then sends the lock signal of the right-rear wheel to the ABS control unit to check the system under right-rear wheel lock. There should be kickback.

SIMULATED DRIVING SIGNAL

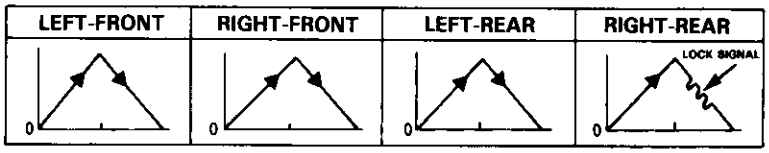

Mode 4: Sends the driving signal of each wheel, then sends the lock signal of the left-front wheel to the ABS control unit to check the system under left-front wheel lock. There should be kickback.

SIMULATED DRIVING SIGNAL

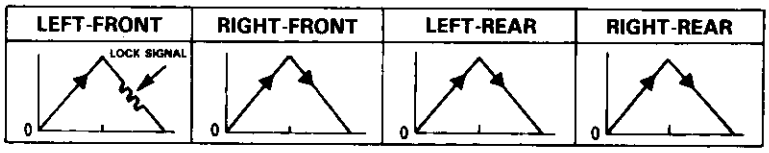

Mode 5: Sends the driving signal of each wheel, then sends the lock signal of the right-front wheel to the ABS control unit to check the system under right-front wheel lock. There should be kickback.

SIMULATED DRIVING SIGNAL

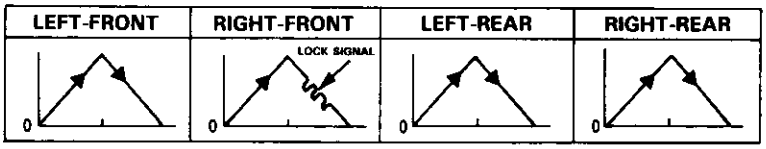

Inspection Points

If the ABS indicator light comes on and the system stops during the inspection, confirm the ABS code and perform the appropriate troubleshooting for the code.

If there is no kickback in modes 2 through 5 and the ABS indicator light does not come on, the following items are probable causes:

- Pressure switch stuck ON
- Clogged or stuck solenoid outlet valve
- Modulator wire harness connectors improperly connected

ABS Function Test

Modulator Function Check

NOTE: This inspection determines whether the basic brake system continues to operate normally when the modulator unit fluid pressure is low.

CAUTION:

- **This inspection is made by relieving the high-pressure fluid in the modulator unit and checking for brake operation. After inspection, be sure to add fresh brake fluid to the specified level of the reservoir, and start the engine to restore the ABS to its normal operating condition.**
- **Do not spill brake fluid on the car; it may damage the paint; if brake fluid does contact the paint, wash it off immediately with water.**
- **Do not reuse the drained brake fluid.**
- **Do not loosen the relief plug on the accumulator.**

1. Remove the bleeder cap from the maintenance bleeder on the modulator unit.

2. Attach the wrench to the maintenance bleeder.

3. Connect a rubber tube of the appropriate diameter to the maintenance bleeder, and set the other end of the rubber tube in a suitable container.

4. While holding the rubber tube with your hand, slowly loosen the maintenance bleeder 1/8 to 1/4 turn to collect the brake fluid in the container.

   CAUTION: Do not loosen the maintenance bleeder too much. The high-pressure brake fluid can burst out.

5. After the brake fluid stops flowing out, loosen the maintenance bleeder more to release the pressure completely.

6. Tighten the maintenance bleeder to the specified torque.

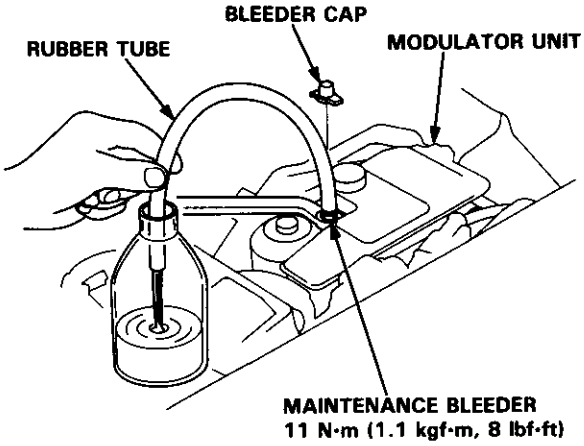

7. Raise the car off the ground and support with safety stands (see section 1).

8. Have an assistant depress the brake pedal firmly, and check that the wheels do not rotate.

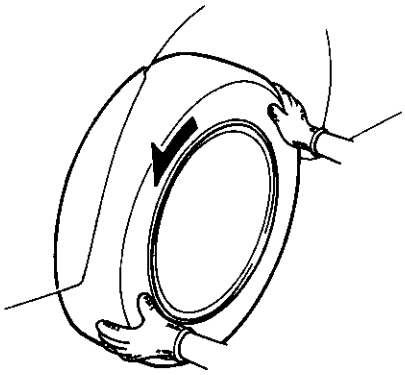

9. Remove the cap and refill the reservoir to the MAX (upper) level with fresh brake fluid.

   NOTE: Pour the brake fluid slowly so that it does not foam, and wait for a few minutes.

10. Start the engine and let it idle for a minute. Stop the engine.

11. Check the brake fluid level in the reservoir. It should be below the MAX (upper) level line. Refill the reservoir with fresh brake fluid to the MAX level line again.

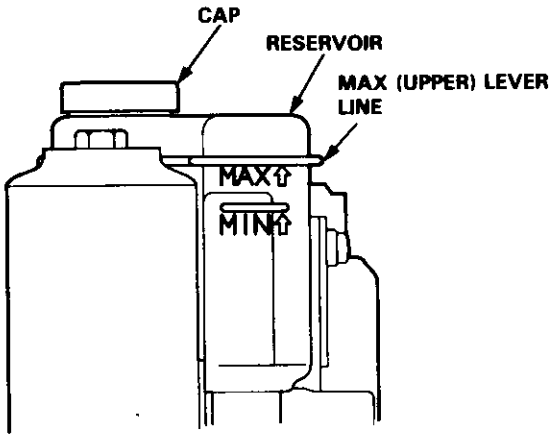

12. After inspection, start the engine and make sure that the ABS indicator light goes off.

Modulator Unit

Relieving System Pressure

CAUTION:

- **Be sure to drain the high-pressure brake fluid completely before performing the modulator function check, disposing the modulator unit, and ABS pump motor replacement.**
- **Do not spill brake fluid on the car; it may damage the paint; if brake fluid does contact the paint, wash it off immediately with water.**
- **Do not reuse the drained brake fluid.**
- **Do not loosen the relief plug on the accumulator.**

1. Remove the bleeder cap from the maintenance bleeder on the modulator unit.
2. Attach the wrench to the maintenance bleeder.
3. Connect a rubber tube of the appropriate diameter to the maintenance bleeder, and set the other end of the rubber tube in a suitable container.
4. While holding the rubber tube with your hand, slowly loosen the maintenance bleeder 1/8 to 1/4 turn to collect the brake fluid in the container.

   CAUTION: Do not loosen the maintenance bleeder too much. The high-pressure brake fluid can burst out.
5. Tighten the maintenance bleeder to the specified torque.

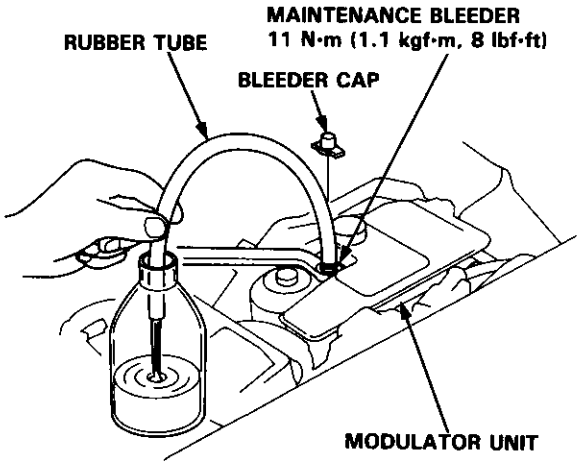

Brake Fluid Replacement

CAUTION:

- **Do not loosen the relief plug on the accumulator.**

NOTE: Brake fluid replacement procedure explained in this section is for the brake fluid in the modulator unit (that is, the brake fluid in the high-pressure passage and in the reservoir). See page 19-6 for the brake fluid replacement procedures for the rest of the brake system.

1. Remove the bleeder cap from the maintenance bleeder on the modulator unit.
2. Attach the wrench to the maintenance bleeder.
3. Connect a rubber tube of the appropriate diameter to the maintenance bleeder, and set the other end of the rubber tube in a suitable container.
4. While holding the rubber tube with your hand, slowly loosen the maintenance bleeder 1/8 to 1/4 to collect the brake fluid in the container.

   CAUTION: Do not loosen the maintenance bleeder too much. The high-pressure brake fluid can burst out.
5. Tighten the maintenance bleeder.

   NOTE: Do not remove the rubber tube and wrench yet.

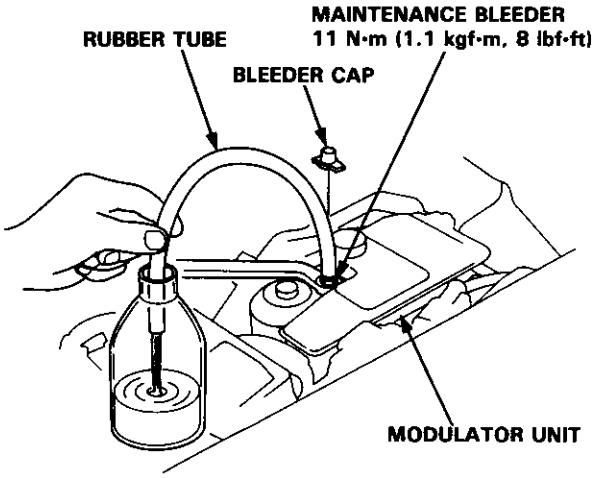

(cont'd)

Brake Fluid Replacement (cont'd)

6. Start the engine and let it idle for a minute. Stop the engine.

7. Check the brake fluid level in the reservoir. It should be below the MAX (upper) level line.

8. Repeat the steps 4 through 7 to drain the rest of the brake fluid from the modulator unit.

   NOTE: The modulator has a capacity of approximately 150 ml (150 cc, 5 ft•oz). Approximately 40–45 ml (40–45 cc, 1.3–1.5 ft•oz) of the fluid is drained at each try.

9. Remove the cap, and refill the reservoir to the MAX (upper) level with fresh brake fluid.

   NOTE: Pour the brake fluid slowly so that it does not foam, and wait for a few minutes.

10. Repeat steps 4 through 8 twice, and refill the reservoir to the MAX (upper) level with fresh brake fluid.

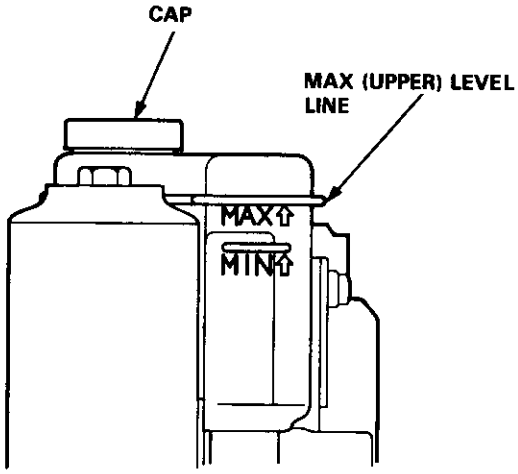

11. Tighten the maintenance bleeder to the specified torque.

12. After replacement, start the engine and make sure that the ABS indicator light goes off.

Bleeding:
When the brake fluid is completely drained from the reservoir (air enters in the modulator unit) during brake fluid replacement, bleed the air from the modulator unit as follows.

–1. Fill the reservoir to the MAX (upper) level with fresh brake fluid.

–2. Connect the rubber tube to the bleeder on the modulator unit, and set the other end of the rubber tube in a container (see the previous page).

–3. Loosen the bleeder, and start the engine to activate the pump motor.

   NOTE: Take care not to spill the brake fluid from the container.

–4. Tighten the bleeder when the fluid starts to flow out of the bleeder.

–5. Stop the engine after the pump motor stops

   NOTE: If the ABS indicator light comes on and the pump motor stops, repeat steps 3 through 5 above.

Removal/Installation

CAUTION:

- **Do not spill brake fluid on the car; it may damage the paint; if brake fluid does contact the paint, wash it off immediately with water.**
- **Take care not to damage or deform the brake pipes during removal and installation.**
- **To prevent the brake fluid from flowing, plug and cover the hose ends and joints with a shop towel or equivalent material.**
- **Do not loosen the relief plug on the accumulator.**

1. Disconnect the modulator unit 14P connector and pump motor 2P connector.

2. Remove the two wire harness clips from the modulator bracket.

   NOTE: When a new harness clip is installed after a wire harness or modulator unit replacement, adjust the harness band to the dimensions shown below.

3. Remove the three 8 mm nuts, and remove the modulator unit from the bracket.

   NOTE: When the pump motor or the modulator unit is replaced, bleed the high-pressure brake fluid first (see page 19-152).

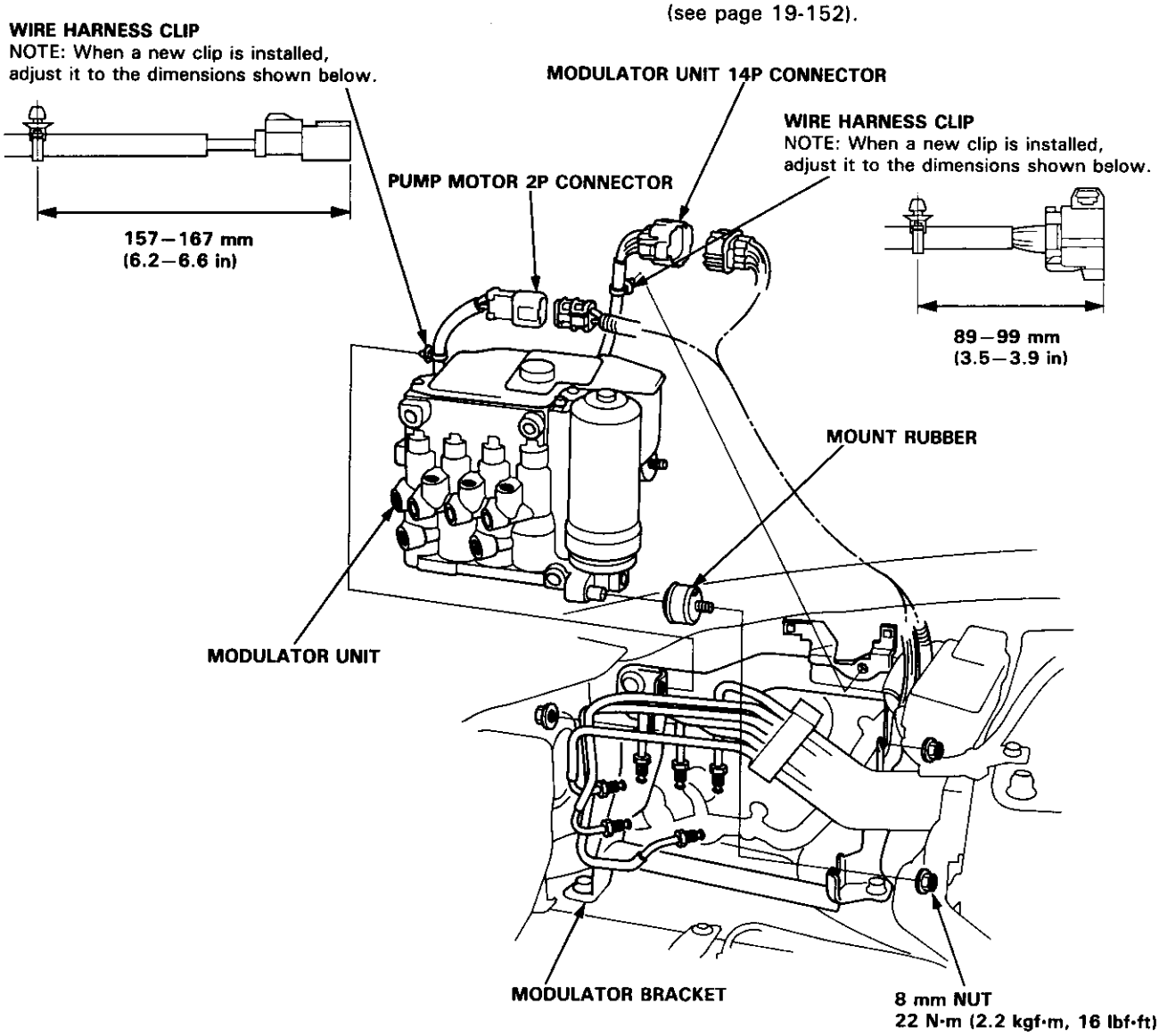

4. Install the modulator unit in the reverse order of removal.

   NOTE: Check the letters stamped on the modulator body, and connect the brake pipes properly. Tighten the flare nuts to 19 N•m (1.9 kgf•m, 14 lbf•ft).

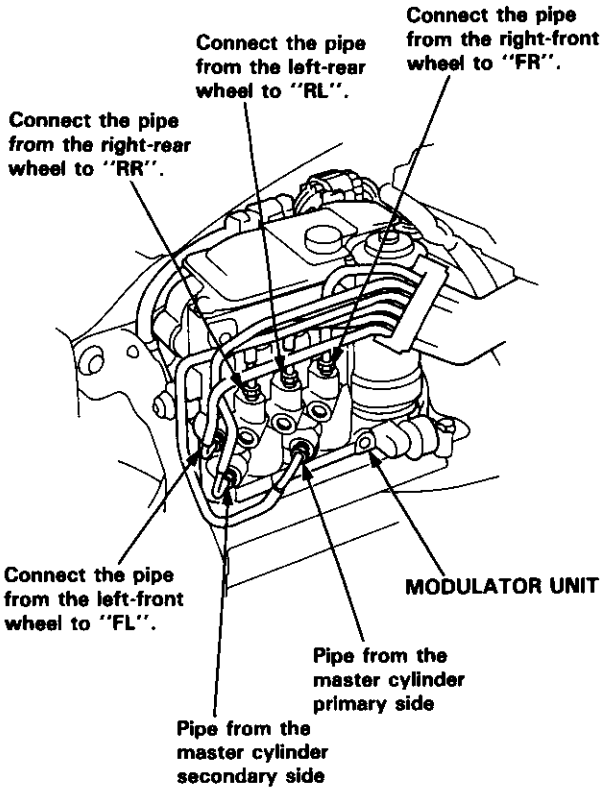

8. Start the engine and let it idle for a minute. Check that:
   - ABS indicator light is off.
   - Brake fluid is not leaking from the brake pipe joints.

9. Stop the engine.

10. Check whether the brake fluid level in the reservoir is at the MAX (upper) level.
    If the level is low, add fresh fluid until the reservoir is refilled to the MAX (upper) level.

11. Bleed air from the brake system (see page 19-6).

Wire Harness Replacement

1. Remove the modulator unit from the car (see page 19-154).

2. Remove the modulator unit cover, and remove the wire harness.

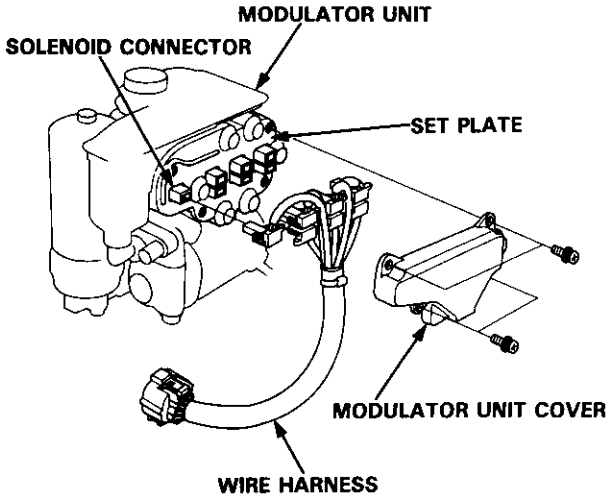

3. Check the numbers stamped on the set plate, and connect each connector of the new wire harness to the set plate of the corresponding number.

   NOTE: Be sure that each connector is locked securely with the two locking tabs.

4. Install the modulator unit cover and modulator unit (see the left column of this page).

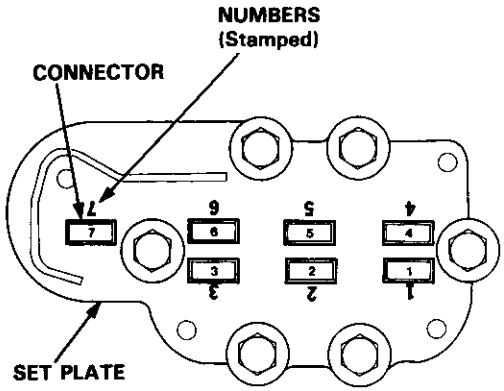

5. Check the ABS function using the ALB checker (see page 19-151).

Pump Motor Replacement

⚠ WARNING The modulator unit contains high-pressure brake fluid. Be sure to bleed the high-pressure fluid from the modulator unit before removing the pump motor.

1. Bleed the high-pressure brake fluid from the modulator unit (see page 19-152).
2. Remove the modulator unit from the car (see page 19-156).
3. Remove the 8 mm flange bolts from the modulator unit, and remove the pump motor.

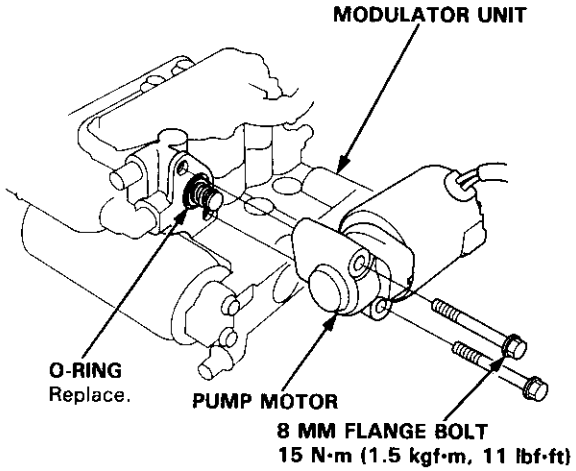

4. Install the pump motor in the reverse order of removal.

   NOTE:
   - After installing the modulator unit, add the fresh brake fluid until the reservoir is refilled to the specified level, and bleed air from the system (see page 19-152).
   - Turn the ignition switch on, and check for the ABS indicator light operation.

Disposal

⚠ WARNING The accumulator contains high pressure nitrogen gas. Do not puncture, expose to the flame, weld, drop or apply impact to the accumulator, or attempt to remove the accumulator from the modulator unit. The modulator unit may explode and severe personal injury may result.

1. Drain the high-pressure brake fluid from the modulator unit (see page 19-152).
2. Secure the modulator unit in a vise so that the relief plug points straight up.
3. Loosen the relief plug three and a half turns slowly and wait for three minutes for all pressure to escape.
4. Remove the accumulator from the modulator unit.
5. Remove the relief plug completely and dispose of the accumulator.

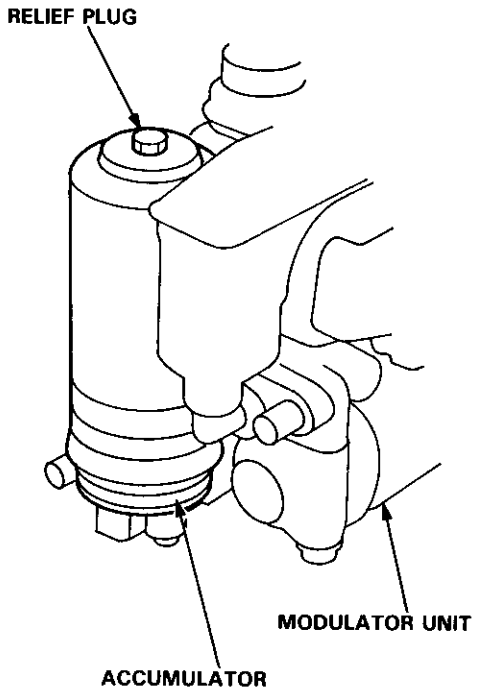

Electronic Components

ABS Control Unit Replacement

1. Remove the right quarter trim panel (hatchback) or trunk side panel (sedan)
2. Disconnect the ABS control unit connectors.
3. Remove the ABS control unit mounting bolts, then remove the control unit.

<HATCHBACK:>

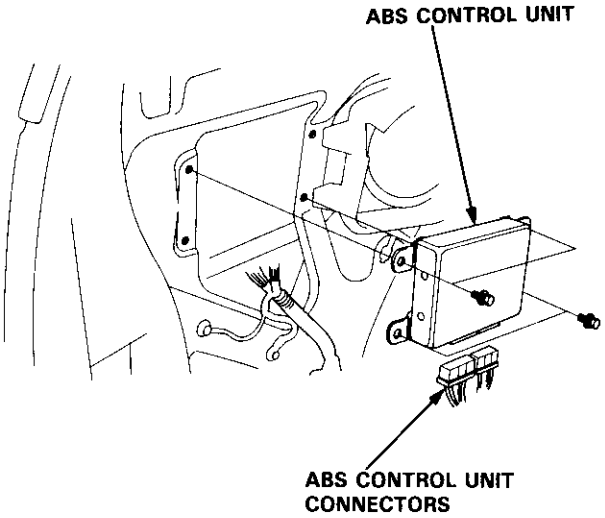

<SEDAN:>

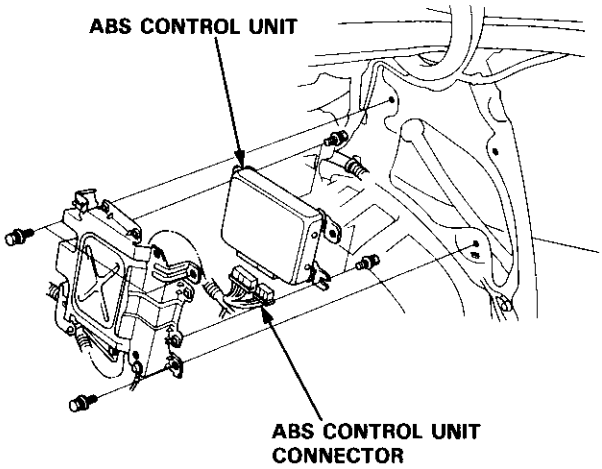

4. Install the ABS control unit in the reverse order of removal.

Relay Inspection

1. Remove the fail-safe relays and motor relay (location: page 19-33).
2. Check for continuity between the terminals C and D. There should be continuity.
3. Check for continuity between the terminals A and B. There should be continuity when the battery is connected between the terminals C and D.
   There should no continuity when the battery is disconnected.

<Fail-safe Relay:>

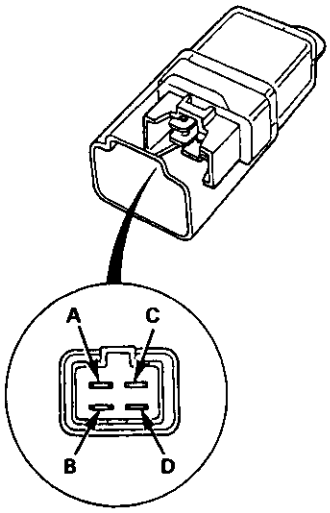

<Motor Relay:>

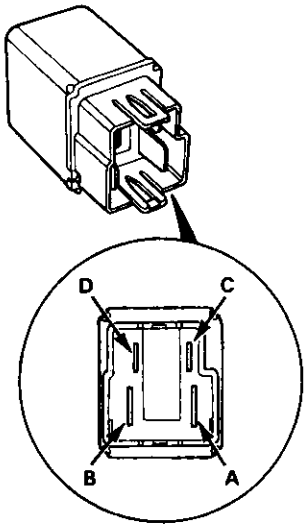

Pulsers/Wheel Sensors

Inspection

Front:

1. Check the front pulser for chipped or damaged teeth.

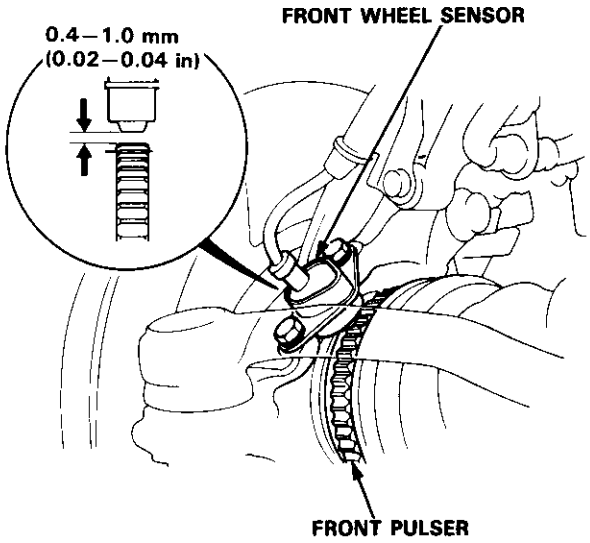

2. Measure the air gap between the wheel sensor and pulser all the way around while rotating the driveshaft by hand.

   Standard:0.4–1.0 mm (0.02–0.04 in)

   NOTE: If the gap exceeds 1.0 mm (0.04 in), the probability is a distorted knuckle which should be replaced.

Rear:

1. Check the rear pulser for chipped or damaged teeth.

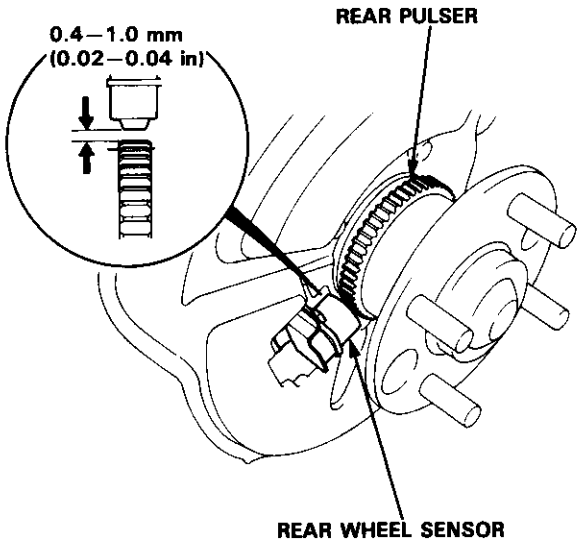

2. Measure the air gap between the wheel sensor and pulser all the way around while rotating the hub bearing unit by hand.

   Standard: 0.4–1.0 mm (0.02–0.04 in)

   NOTE: If the gap exceeds 1.0 mm (0.04 in), the probability is a distorted knuckle which should be replaced.

Wheel Sensor Replacement

NOTE:
- Be careful when installing the sensors to avoid twisting the wires.
- After sensor replacement, confirm proper operation (see page 19-149).

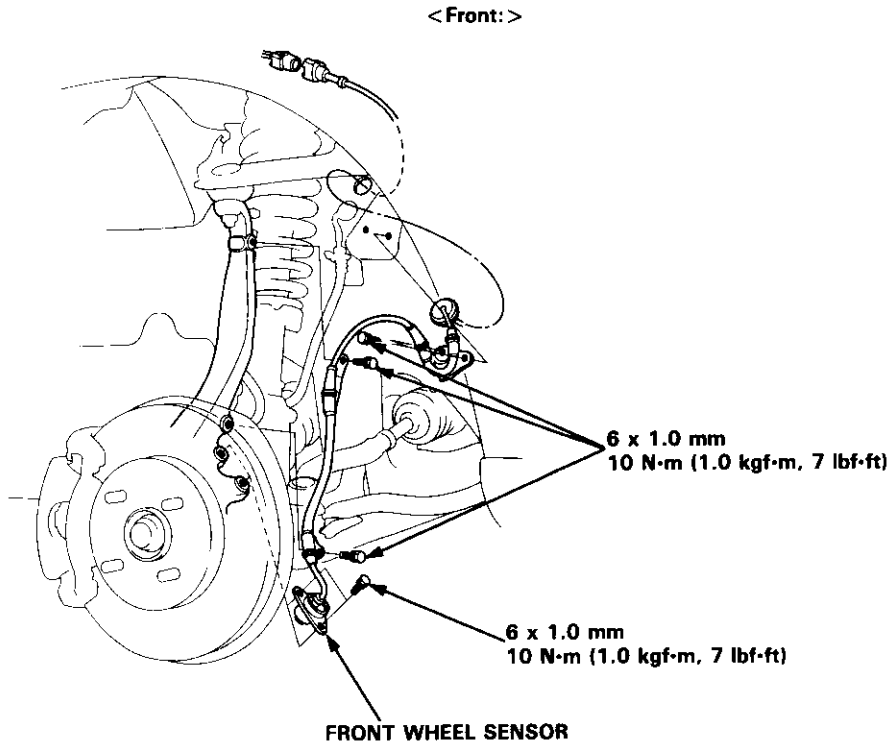

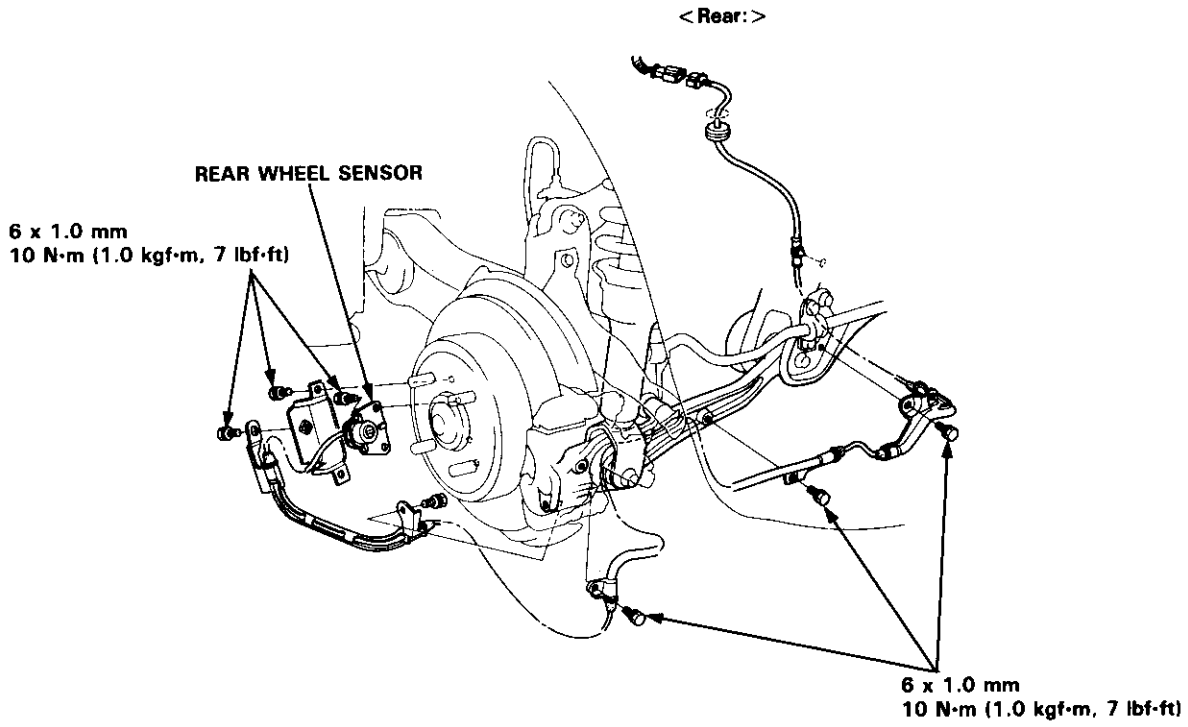

Body

Bumpers
Front Bumper Replacement 20-139
Rear Bumper Replacement
Hatchback 20-141
Sedan 20-142
*Carpet
Replacement 20-124
*Consoles, Front and Rear
Replacement 20-128
Dashboard
Component Removal/Installation ... 20-131
Replacement Precautions 20-136
Replacement 20-137
Doors
Door Index Hatchback 20-2
Front Door Index Sedan 20-18
Rear Door Index Sedan 20-30
Door and Side Molding
Replacement 20-162
Fender Well Trim and Wheelhouse
Protector
Replacement 20-159
*Frame Repair Chart 20-166
Hatch
Replacement 20-146
Adjustment 20-148
Support Strut Disposal 20-149
Hatch Latch and Lock Cylinder
Replacement 20-156
Hatch Spoiler
Replacement 20-159
Hatch/Trunk Lid Weatherstrip
Replacement 20-160
Headliner
Replacement Hatchback 20-98
Sedan 20-100
Hood
Replacement 20-144
Adjustment 20-145
Interior Trim
Replacement Hatchback 20-91
Sedan 20-94
Mirrors
Power Door Mirror Replacement ... 20-49
Mirror Holder Replacement 20-50
Mirror Visor and Mirror Cover
Replacement Hatchback 20-50
Sedan 20-51
Rearview Mirror Replacement 20-52
Moonroof
Index Hatchback 20-77
Sedan 20-84
Opener and Latch
Replacement 20-154
Opener Cables
Replacement 20-152
Rear Emblems
Installation 20-164
Retainers and Weatherstrip
Replacement 20-158
Roof Molding
Replacement 20-161
Seats
Front Seat Removal 20-103
Front Seat Replacement 20-104
Front Seat Cover Replacement 20-106
Rear Seat Replacement
Hatchback 20-108
Sedan 20-110
Rear Seat Cover Replacement 20-112
Seat Belts
Front Seat Belt Replacement
Hatchback 20-115
Sedan 20-116
Rear Seat Belt Replacement
Hatchback 20-119
Sedan 20-120
Inspection 20-122
Child Seat Anchor Plate 20-123
Side Sill Panel
Replacement 20-163
Sub-frame 20-165
Trunk Lid
Replacement 20-149
Adjustment 20-151
Trunk Lid Latch and Lock Cylinder
Replacement 20-157
Trunk Trim
Replacement 20-97
Windshield, Rear Window, Quarter Glass
Index Hatchback 20-53
Sedan 20-54

Door Index

Hatchback

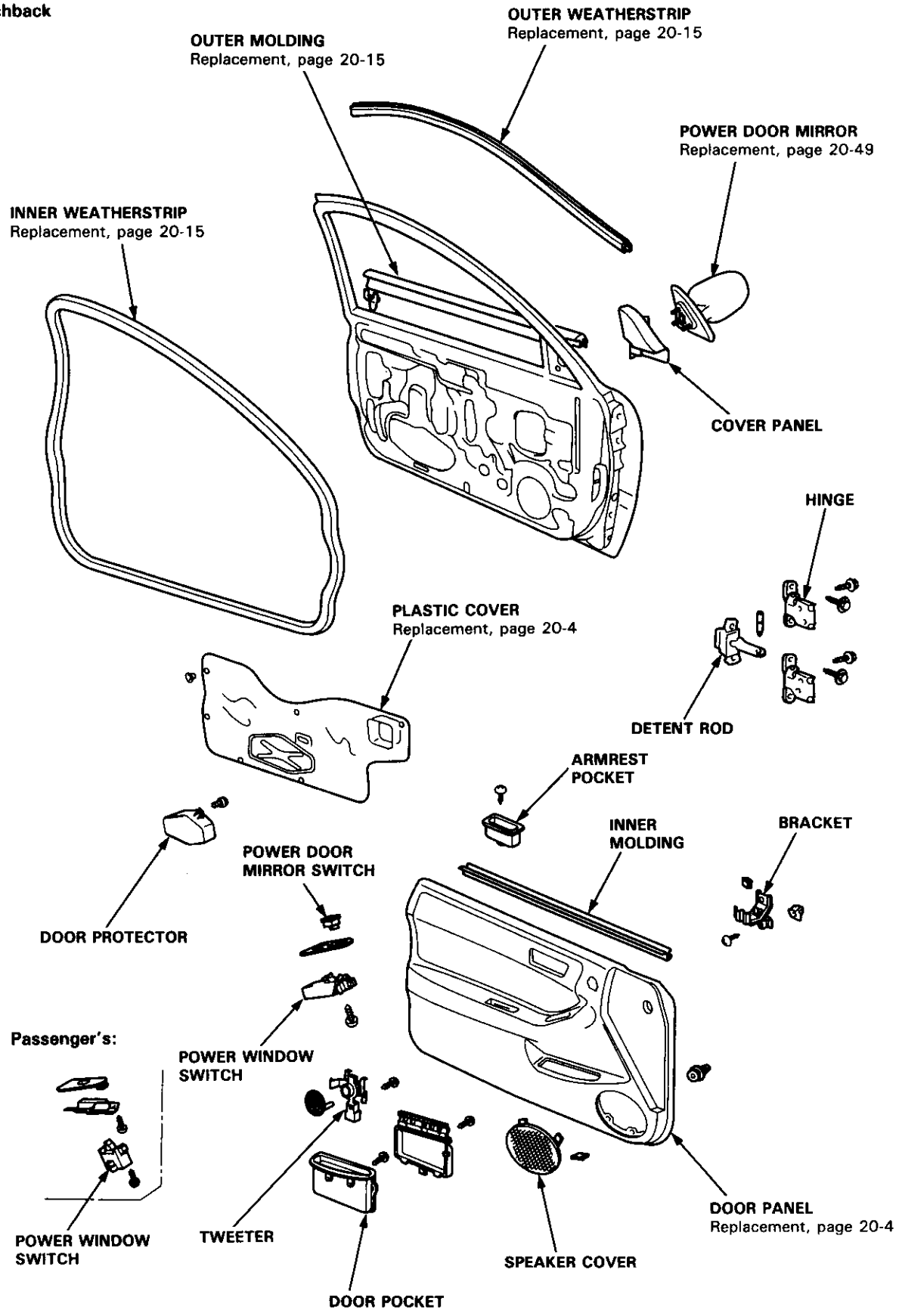

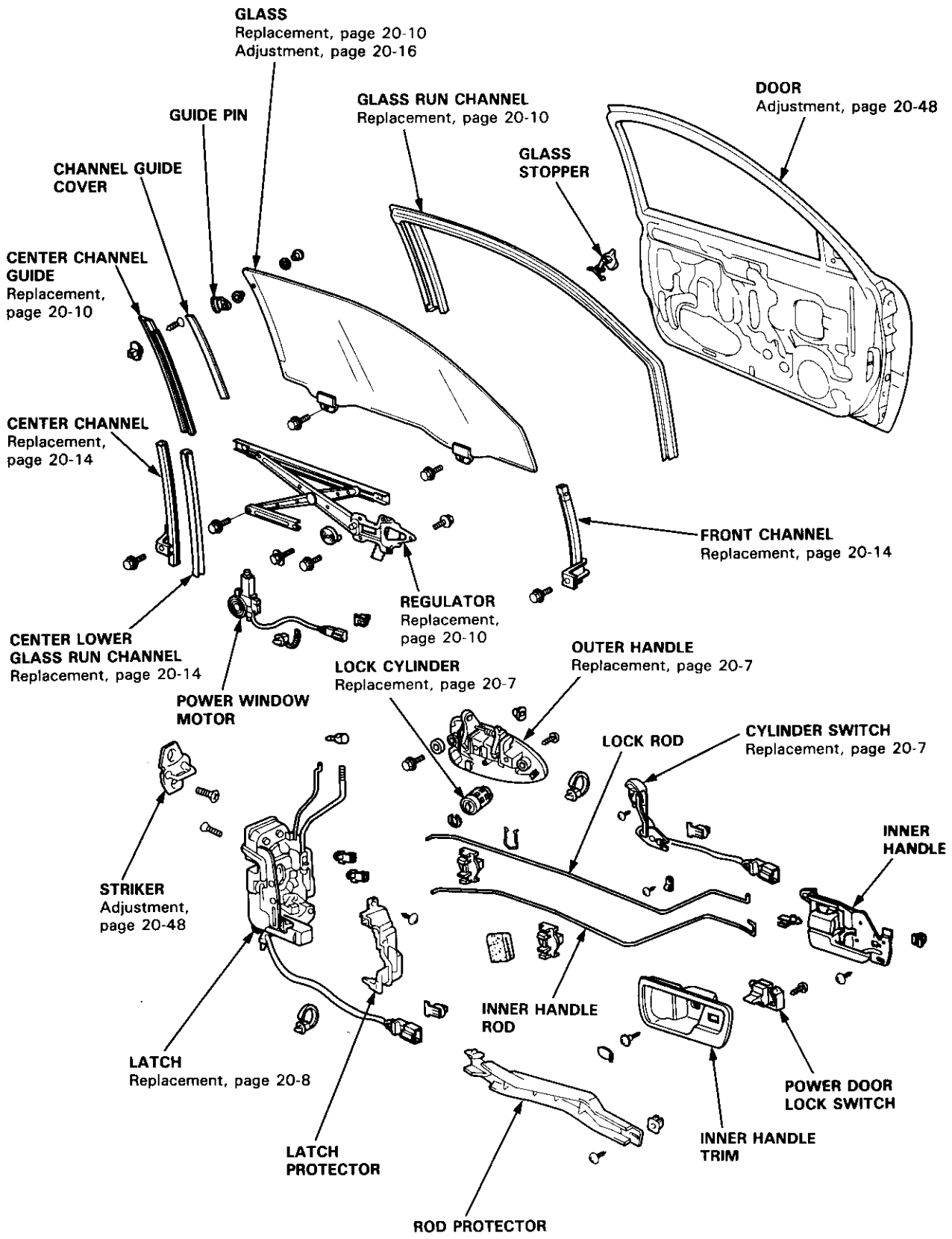
GLASS
Replacement, page 20-10
Adjustment, page 20-16
GUIDE PIN
GLASS RUN CHANNEL
Replacement, page 20-10
DOOR
Adjustment, page 20-48
GLASS STOPPER
CHANNEL GUIDE COVER
CENTER CHANNEL GUIDE
Replacement, page 20-10
CENTER CHANNEL
Replacement, page 20-14
FRONT CHANNEL
Replacement, page 20-14
REGULATOR
Replacement, page 20-10
CENTER LOWER GLASS RUN CHANNEL
Replacement, page 20-14
POWER WINDOW MOTOR
LOCK CYLINDER
Replacement, page 20-7
OUTER HANDLE
Replacement, page 20-7
LOCK ROD
CYLINDER SWITCH
Replacement, page 20-7
INNER HANDLE
STRIKER
Adjustment, page 20-48
INNER HANDLE ROD
LATCH
Replacement, page 20-8
POWER DOOR LOCK SWITCH
INNER HANDLE TRIM
LATCH PROTECTOR
ROD PROTECTOR

Door Panel/Plastic Cover Replacement

NOTE: Take care not to scratch the door panel and other parts.

1. Pry the cap and remove the screw.

◀ : Screw location, 1

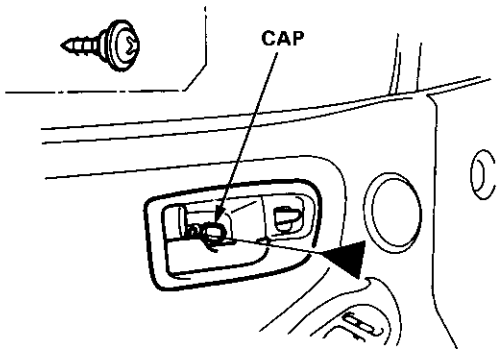

2. Remove the inner handle trim while pulling the inner handle.
   Disconnect the power door lock connector.

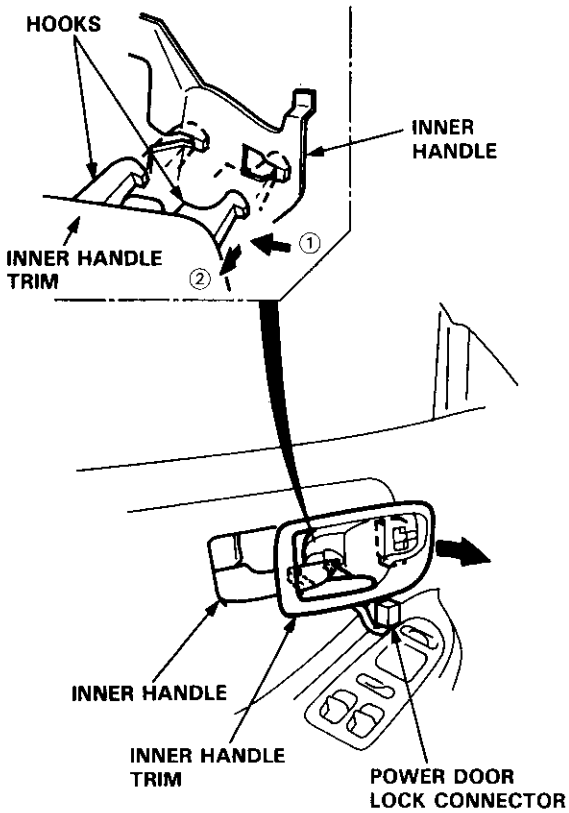

3. Remove the armrest pocket.

▼ : Screw location, 1

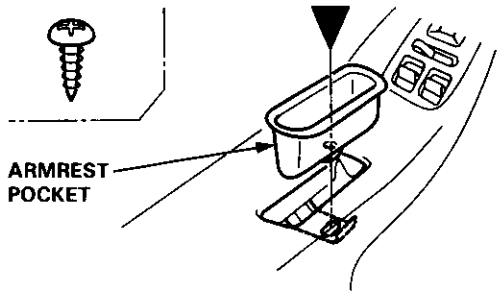

4. Release the clips that hold the door panel.

   NOTE: Remove the door panel with as little bending as possible to avoid creasing or breaking it.

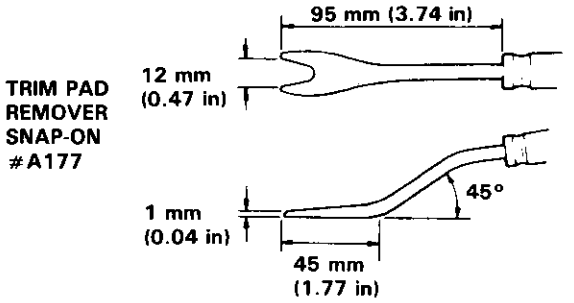

◁ : Clip locations

A◁ : Clip, 1

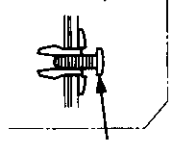

NOTE: Loosen the screw, then remove the clip using a trim pad or clip remover.

B◁ : Clip, 8

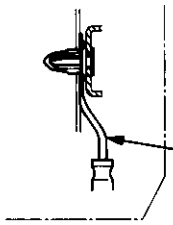

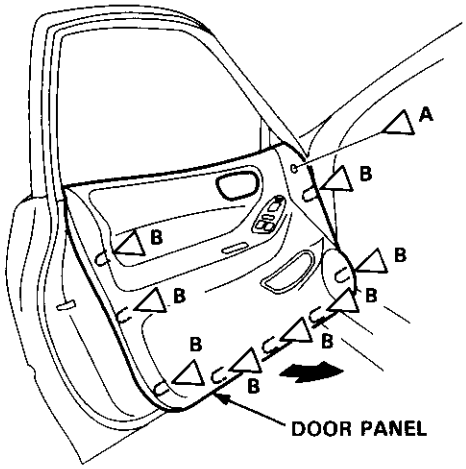

5. Remove the door panel by pulling it upward. Disconnect the following:
   - Power window connector
   - Power door mirror connector
   - Tweeter connector

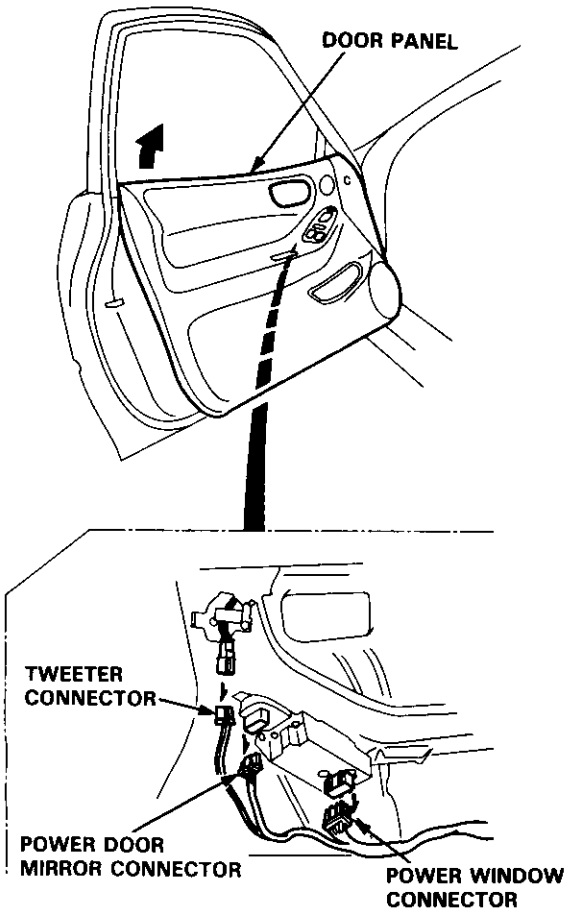

6. Remove the bracket and door lock unit. If necessary, remove the front speaker. Disconnect the connectors.

▲: Screw locations, 8

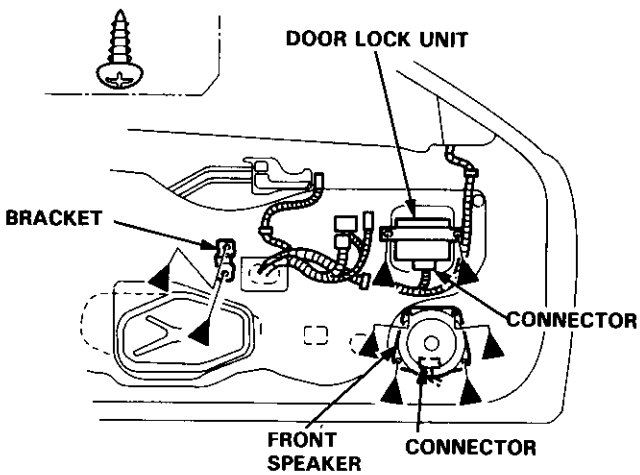

7. Remove the cover panel, then disconnect the power door mirror connector (see page 20-49).

8. Detach the grommets and harness clips, then carefully remove the plastic cover.

●: Grommet locations, 2 ◉: Harness clip locations, 3

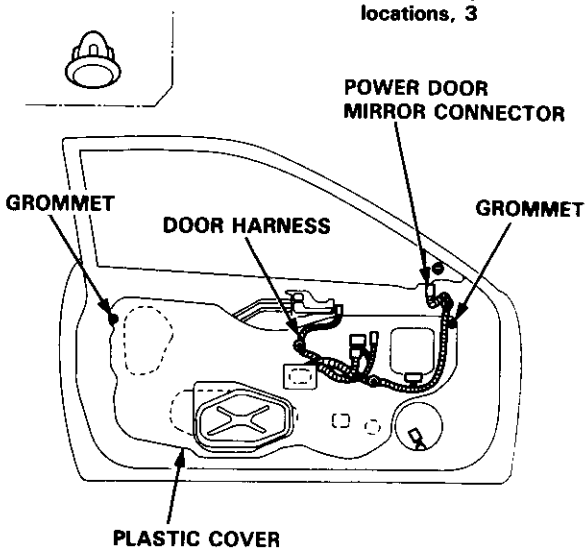

9. Before installing the plastic cover, make sure the door harness and connectors are fastened correctly on the door.

●: Connector clip locations, 3
◉: Harness clip locations, 7

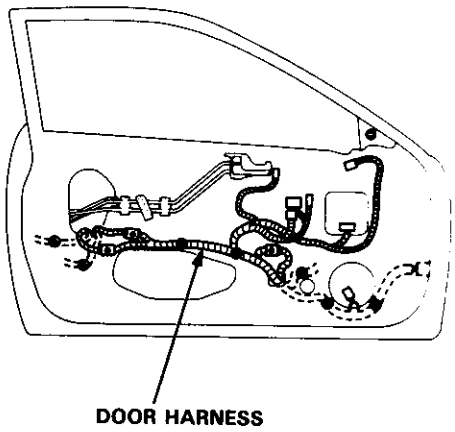

(cont'd)

Door Panel/Plastic Cover Replacement (cont'd)

10. Install the plastic cover.

    NOTE:
    - Apply adhesive along the edge where necessary to maintain a continuous seal and prevent water leaks.
    - Do not plug the elongated hole.

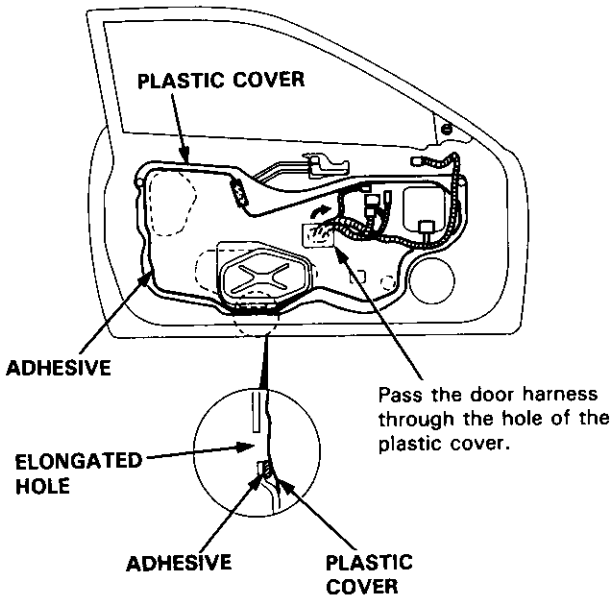

11. Install all removed parts, and fasten the door harness correctly.

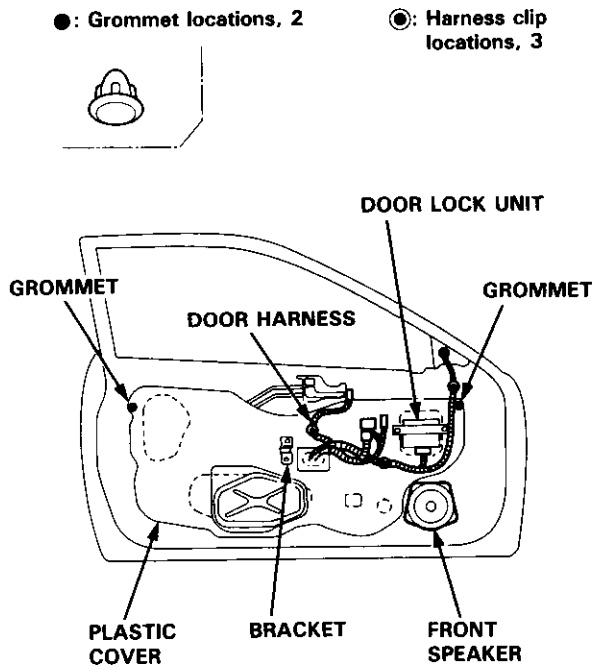

12. Install the door panel (see page 20-4).

    NOTE:
    - Make sure the door harness is not pinched.
    - If necessary, replace any damaged clips.
    - Make sure the connectors are connected properly.

13. Install the armrest pocket and inner handle trim (see page 20-4).

    NOTE: Make sure the connector is connected properly.

Outer Handle Replacement

NOTE: Raise the glass fully.

1. Remove:
   - Door panel (see page 20-4)
   - Plastic cover (see page 20-4)

2. Remove the rod protector.

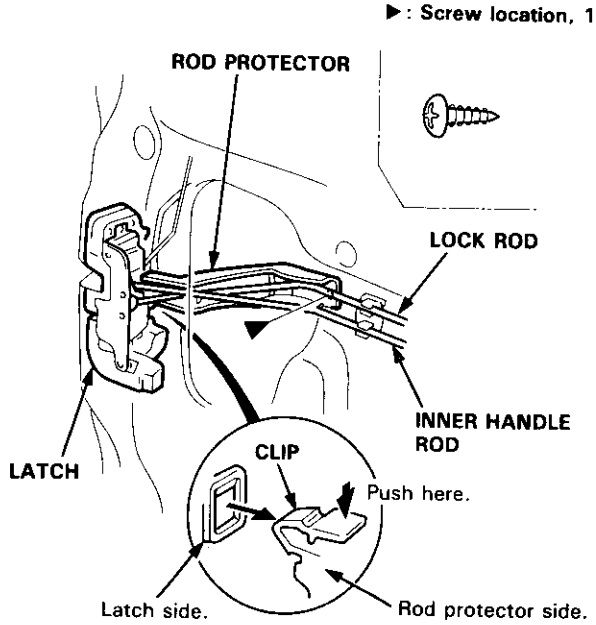

3. Disconnect the connector, and remove the harness clamp and clips.

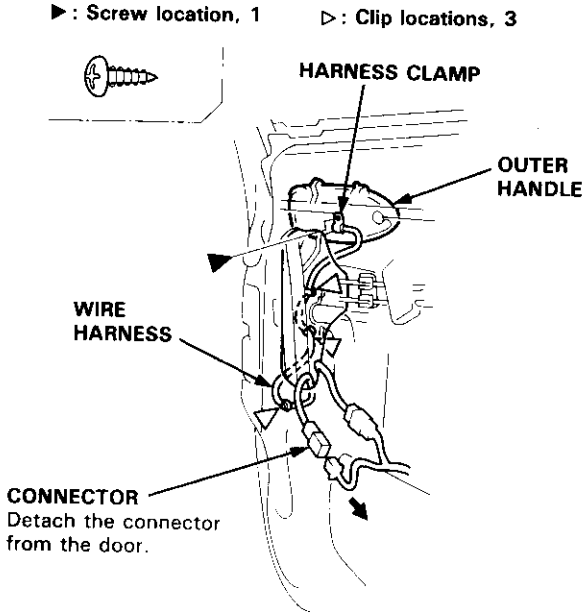

4. Remove the bolts.

   ▶: Bolt locations, 2

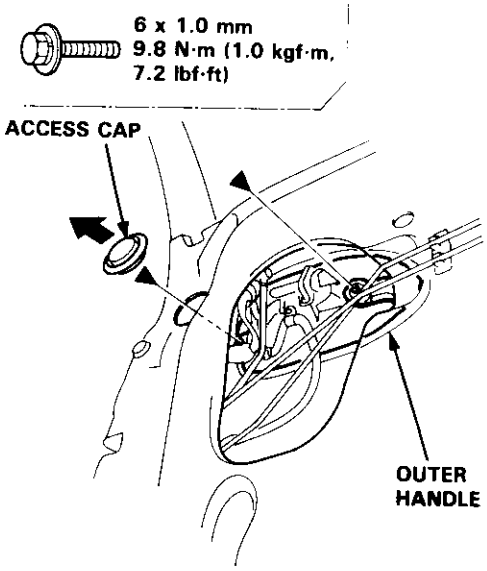

5. Pull out the outer handle.
   Pry the outer handle rod out of its joint using a flat tip screwdriver.

   NOTE:
   - To ease reassembly, note the location Ⓐ of the outer handle rod on the joint before disconnecting it.
   - Take care not to bend the outer handle rod.
   - Use a shop towel to protect the opening in the door.

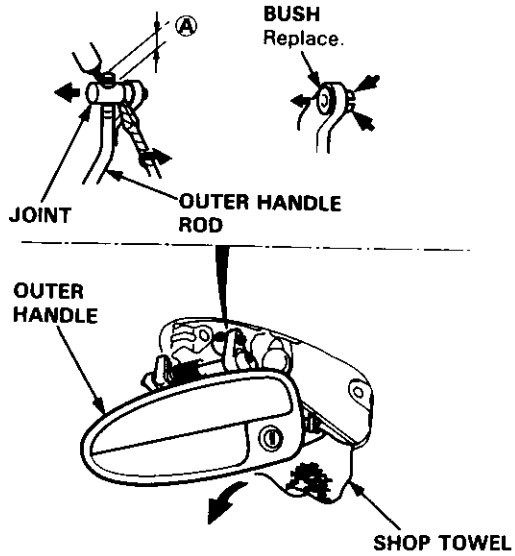

(cont'd)

Outer Handle Replacement (cont'd)

6. Disconnect the cylinder rod as shown.

   NOTE: Take care not to damage the lock cylinder joint.

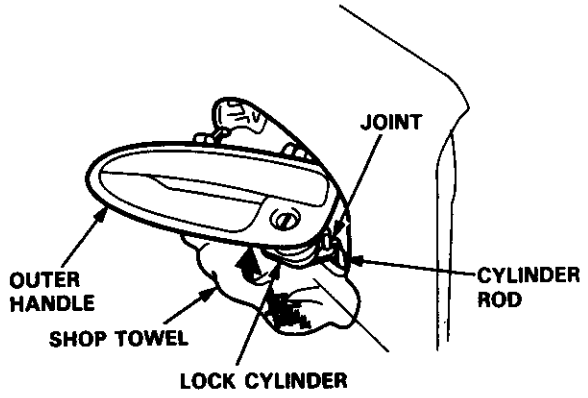

7. Remove the cylinder switch from the outer handle.

▼: Screw locations, 1

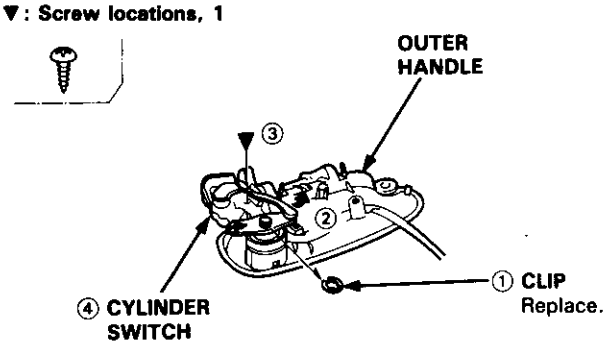

8. Pull out the retainer clip, then remove the lock cylinder.

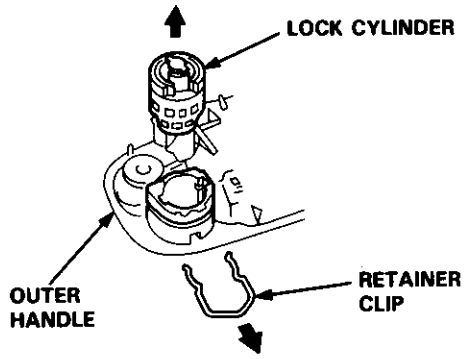

9. Installation is the reverse of the removal procedure.

   NOTE:
   - Make sure the outer handle rod and connector are connected securely.
   - Make sure the wire harness is routed properly.
   - Check the door lock and open operations.

Latch Replacement

NOTE: Raise the glass fully.

1. Remove:
   - Door panel (see page 20-4)
   - Plastic cover (see page 20-4)
   - Outer handle (see page 20-7)

2. Disconnect the inner handle rod and lock rod from the latch.
   Detach the inner handle rod and lock rod, then remove the inner handle.

   NOTE: Take care not to bend the rods.

▶: Screw locations, 2

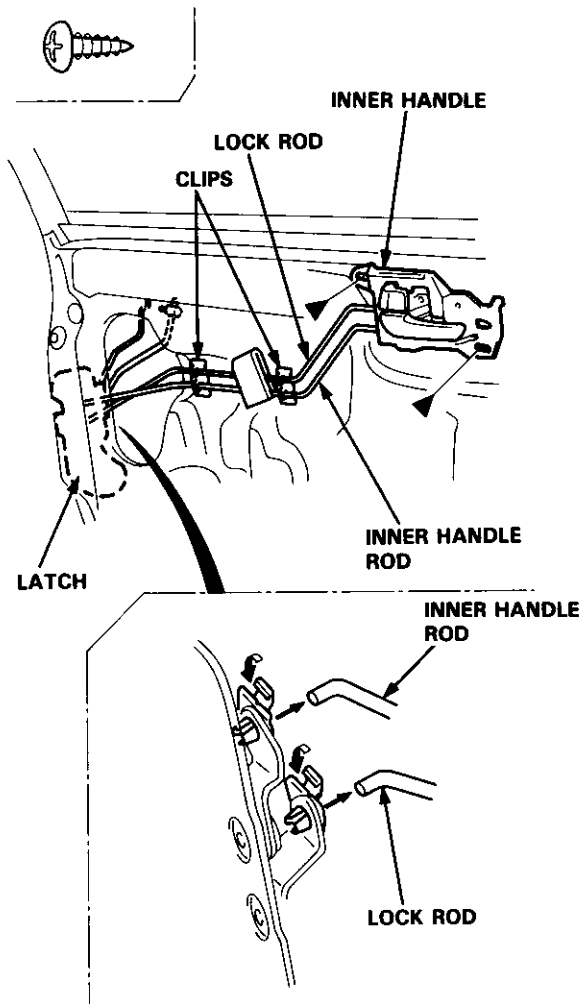

3. Loosen the bolt, then move the center channel outward.

▶: **Bolt location, 1**

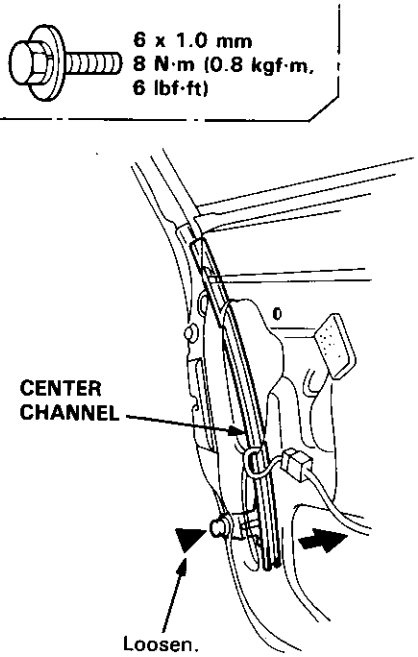

4. Disconnect the connector, and detach the harness clip from the door.
Remove the screw.

▶: **Screw locations, 3**

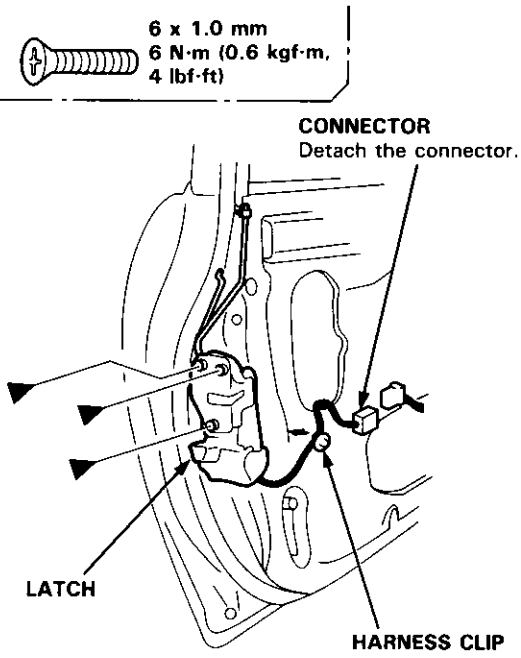

5. Remove the latch through the hole in the door.

NOTE: Take care not to bend the outer handle rod and cylinder rod.

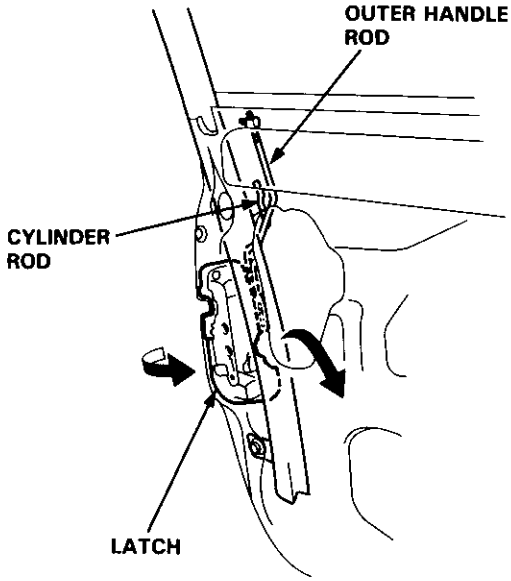

6. Installation is the reverse of the removal procedure.

NOTE:
- Make sure the inner handle rod, lock rod and connector are connected properly.
- Check the door lock and open operations.

Glass/Regulator/Glass Run Channel Replacement

1. Remove:
   - Door panel (see page 20-4)
   - Plastic cover (see page 20-4)

2. Remove the power window switch from the door panel, then connect it to the door harness (see page 20-16).

3. Lower the glass fully.

4. Peel off the channel guide cover, then remove the screws.

   NOTE: When installing the channel guide cover, apply the double-faced adhesive tape to it.

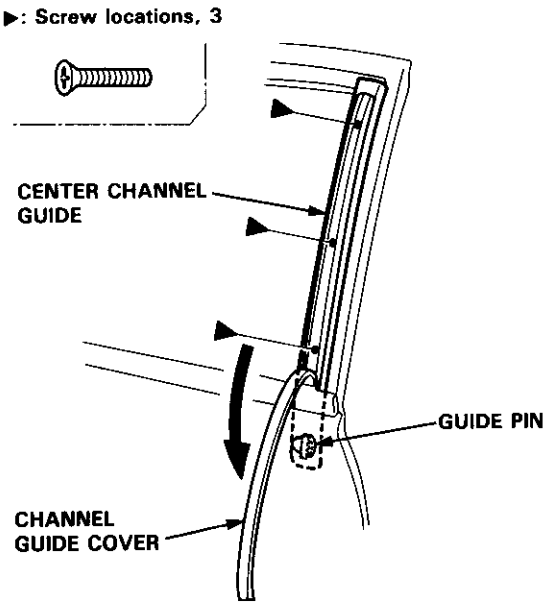

5. Remove the center channel guide by pulling it upward.

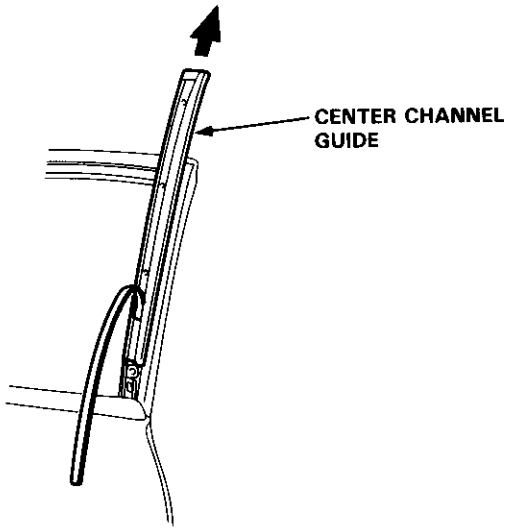

6. Carefully move the glass until you can see the bolts, then loosen them.
   Slide the guide to the rear, then remove the glass from the guide.

   NOTE: Take care not to drop the glass inside the door.

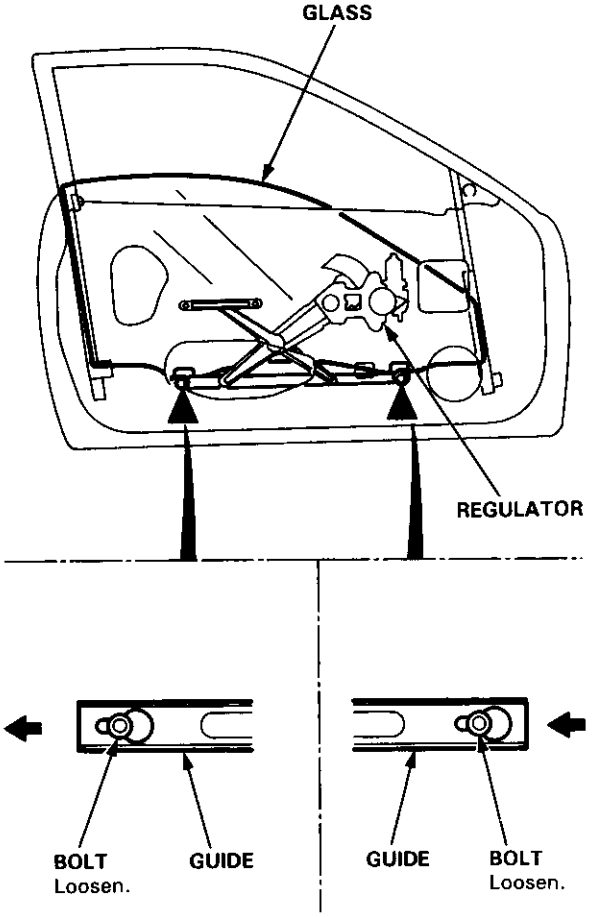

7. Carefully pull the glass out through the window slot.

NOTE:
- Take care not to drop the glass inside the door.
- Check the guide pin for damage, and replace if necessary.

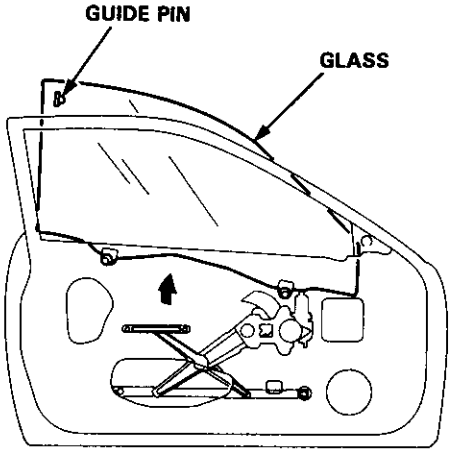

NOTE: Scribe a line around the guide pin to show the original location.

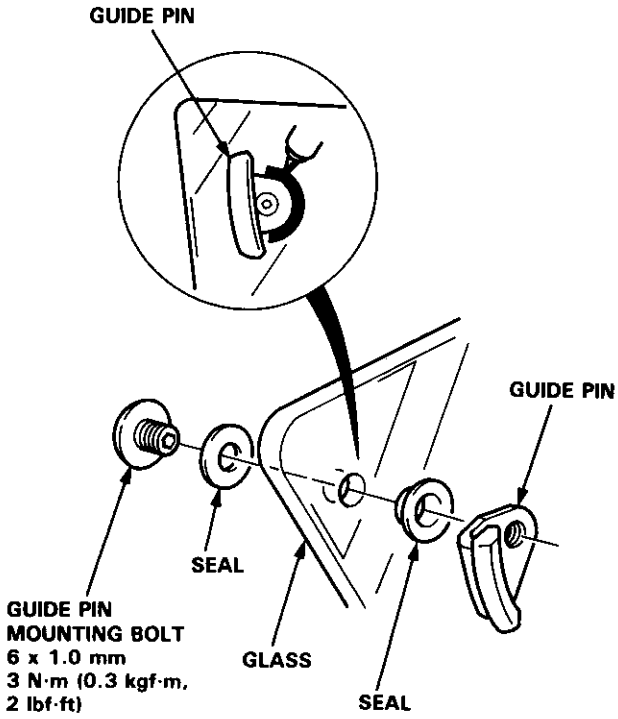

8. Disconnect the connector, then remove the regulator through the center hole in the door.

NOTE: Scribe a line around the rear roller guide bolt to show the original adjustment.

▲: Bolt locations, 6

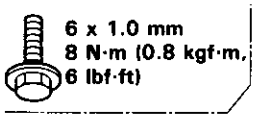

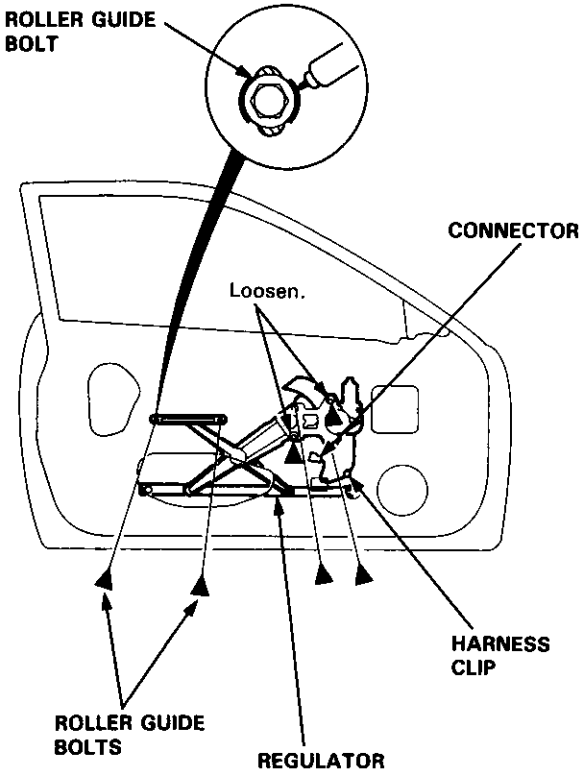

(cont'd)

Glass/Regulator/Glass Run Channel Replacement (cont'd)

9. Remove the power window motor from the regulator.

   NOTE: Before removing the power window motor, mark the location by scribing a line across the sector gear and regulator.

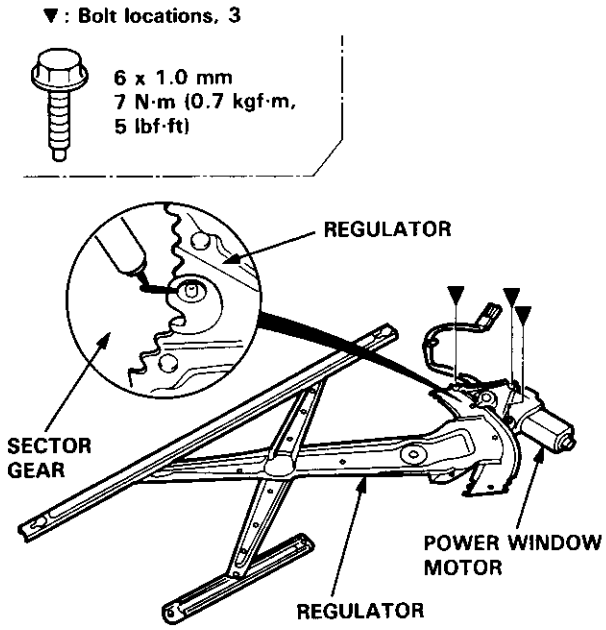

10. Detach the clips, then peel and remove the glass run channel.

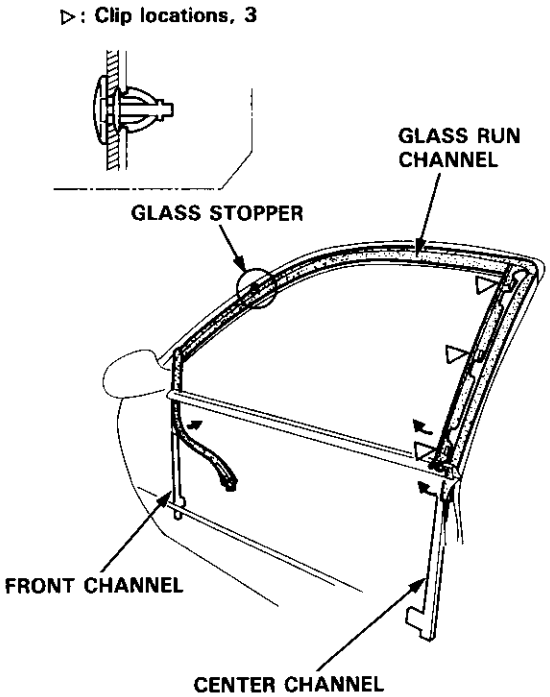

NOTE: If necessary, remove the glass stopper.

When installing the glass stopper, align it with the notch of the outer weatherstrip.

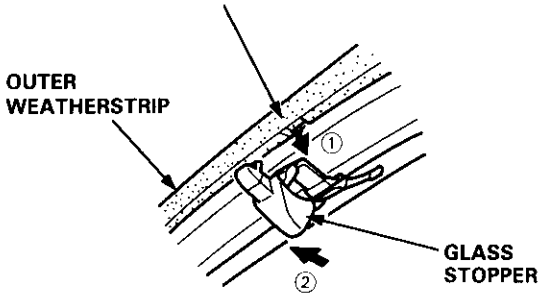

11. Grease all the sliding surfaces of the regulator where shown. Install the power window motor on the regulator.
    Check that the regulator moves smoothly by connecting a 12 V battery to the power window motor (see section 23).

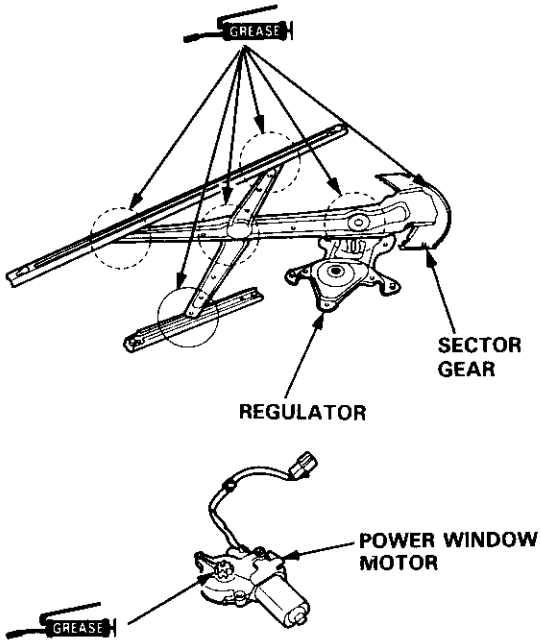

12. Apply clear sealant to the location Ⓐ of the door as shown, then install the glass run channel.

NOTE:
- If necessary, replace any damaged clips.

▷: **Clip location, 3**

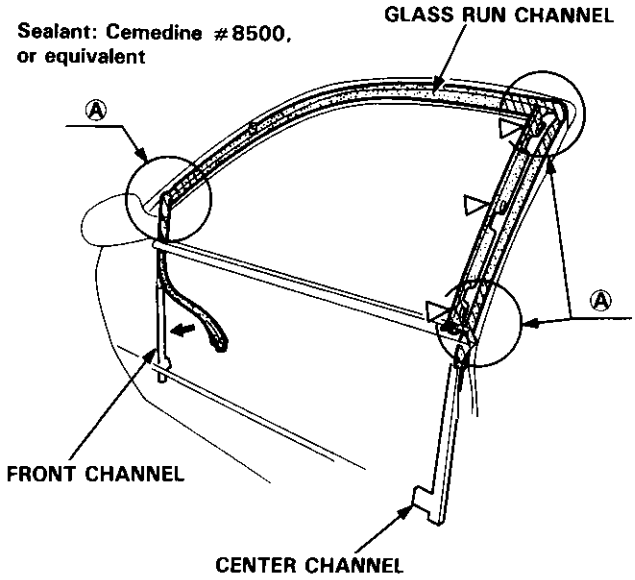

- Fit the glass run channel into the front channel and on the door as shown.

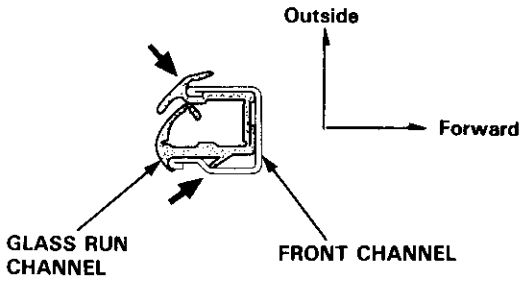

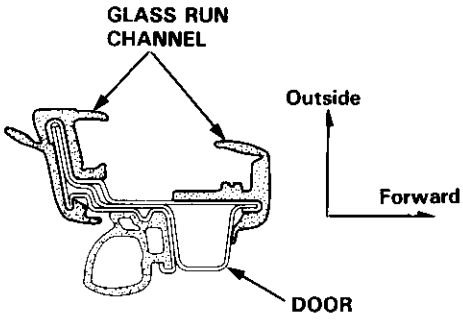

13. Install the regulator (see page 20-11).

NOTE: Make sure the connector is connected properly.

14. Install the glass (see page 20-10).

15. Install the center channel guide and channel guide cover.

NOTE: Make sure the guide pin is installed in the center channel guide properly.

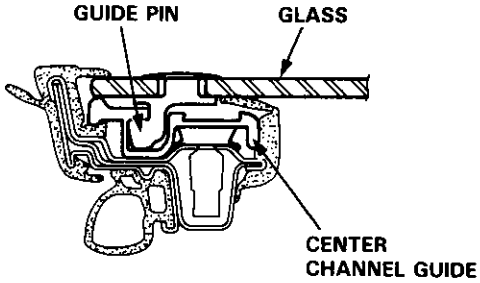

16. Roll the glass up and down to see if it moves freely without binding. Also make sure that there is no clearance between the glass and glass run channel when the glass is closed. Adjust the position of the glass as necessary (see page 20-16).

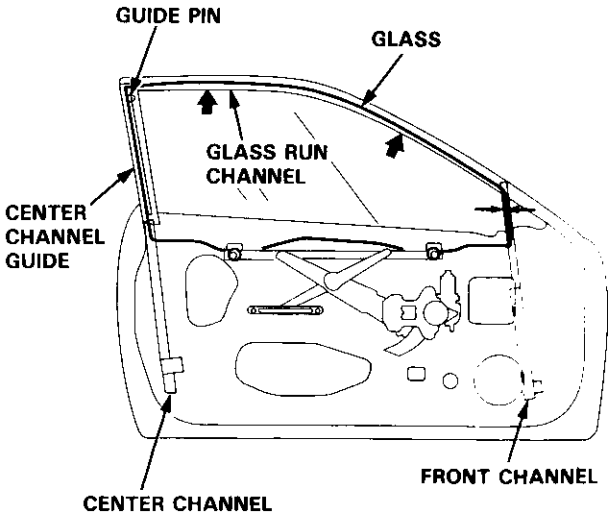

17. Attach the door harness to the door correctly (see page 20-5).

18. Disconnect the power window switch from the door harness, then install the power window switch on the door panel (see page 20-16).

19. When reinstalling the plastic cover, apply adhesive along the edge where neccessary to maintain a continuous seal and prevent water leaks (see page 20-6).

20. Install the door panel (see page 20-4).

Front and Center Channel Replacement

NOTE: Raise the glass fully.

1. Remove:
   - Door panel (see page 20-4)
   - Plastic cover (see page 20-4)

2. Remove the front and center channels.

◀ : Bolt locations, 2

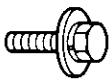

6 x 1.0 mm
8 N·m (0.8 kgf·m, 6 lbf·ft)

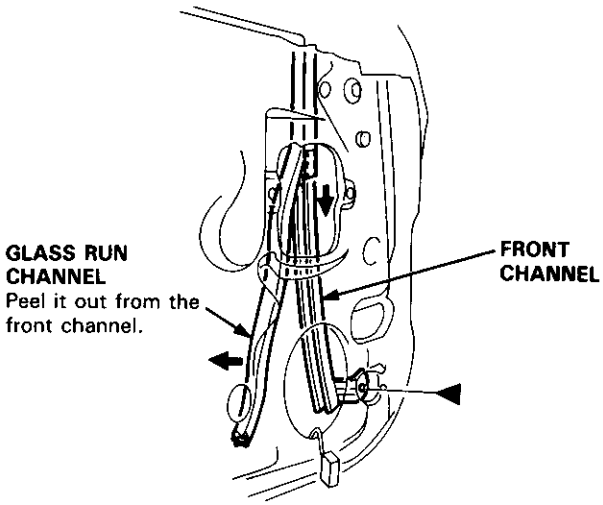

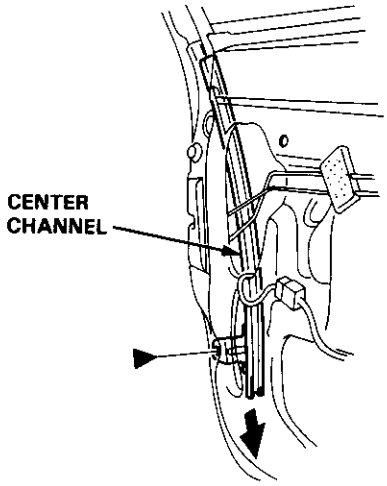

3. Peel the center lower glass run channel out from the center channel.

   NOTE: When installing, apply clear sealant to the location Ⓐ of the center channel.

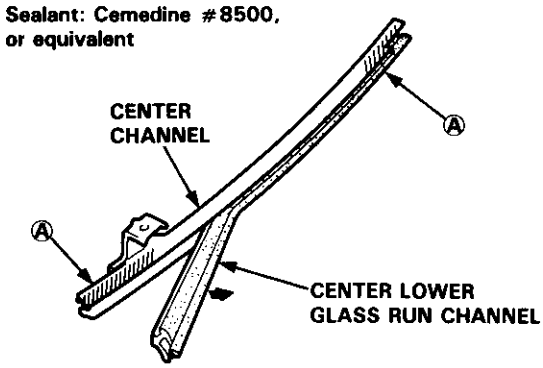

14. Installation is the reverse of the removal procedure.

    NOTE:
    - Fit the glass run channels into the front and center channels as shown.

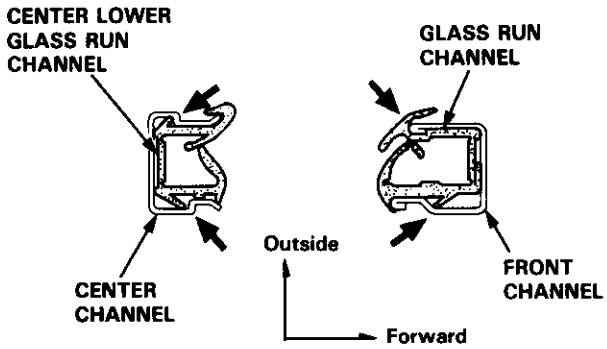

- Install the center channel while pushing the glass as shown.
- Make sure the glass run channels are not twisted.

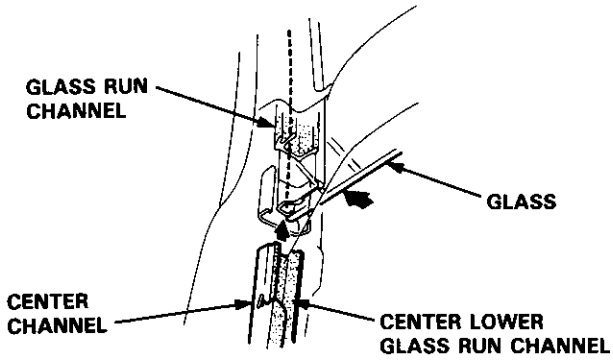

Outer Molding Replacement

CAUTION: Wear gloves to remove the outer molding.

1. Remove the door mirror (see page 20-49).
2. Lower the glass.
3. Starting at the rear, pry the outer molding up and detach the clips, then remove the outer molding.

   NOTE: Take care not to twist or scratch the outer molding.

   △ : Clip locations, 6

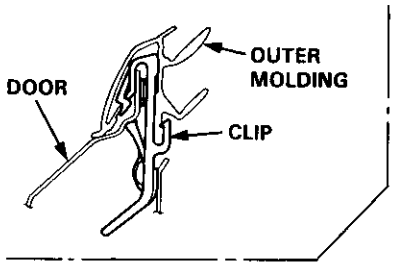

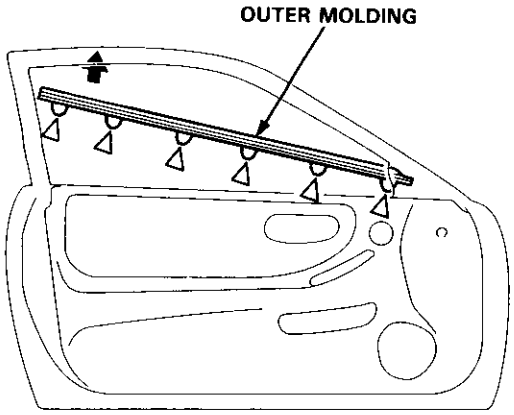

4. Installation is the reverse of the removal procedure.

   NOTE:
   - If necessary, replace any damaged clips.
   - When installing, align the rear edge of the outer molding with the rear edge of the door.

Weatherstrip Replacement

NOTE:
- Before installing the inner weatherstrip, apply clear sealant to the location Ⓐ of the door as shown.
- If necessary, replace any damaged clips.

Sealant: Cemedine #8500, or equivalent

▷ : Clip locations, 21 ○ : Clip location, 1

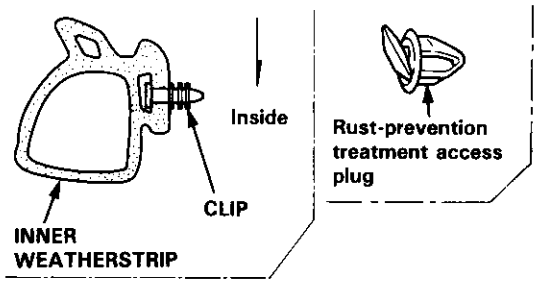

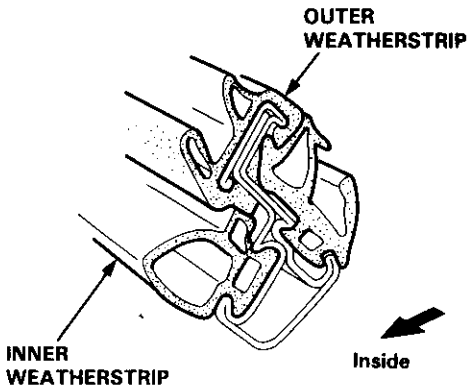

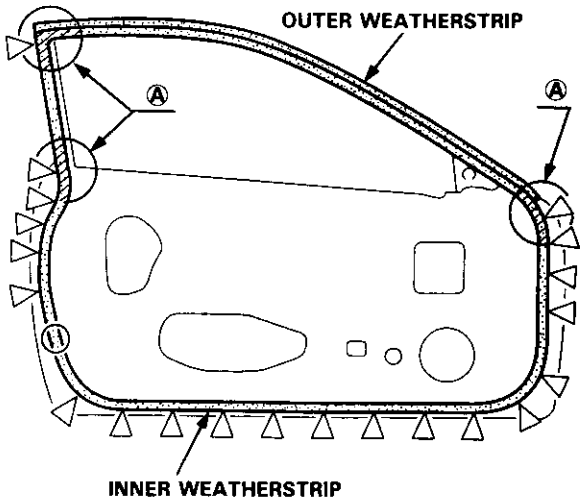

Glass Adjustment

NOTE:
- Place the vehicle on a firm, level surface when adjusting the glass.
- Check the weatherstrips and glass run channel for damage or deterioration and replace if necessary.

1. Remove the door panel, and peel off the plastic cover (see page 20-4).

2. Remove the power window switch from the door panel.

◀: Screw locations, 5

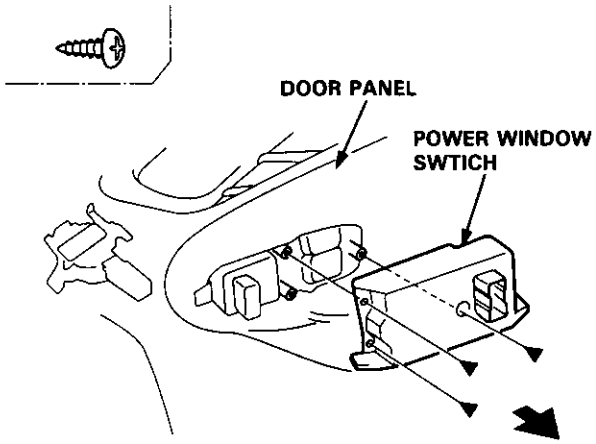

3. Connect the power window switch to the door harness.

4. Make sure the guide pin is installed in the center channel guide properly.

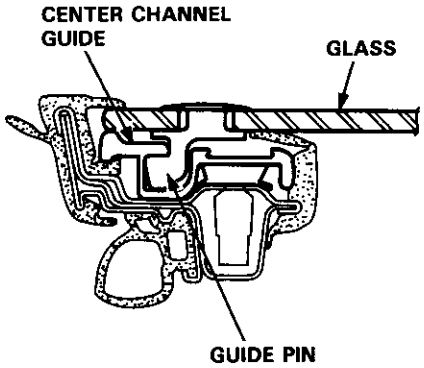

5. Raise the glass as far up as possible, and hold it against the glass run channel.

6. Loosen the roller guide bolts, and adjust the glass so it is parallel with the glass run channel.

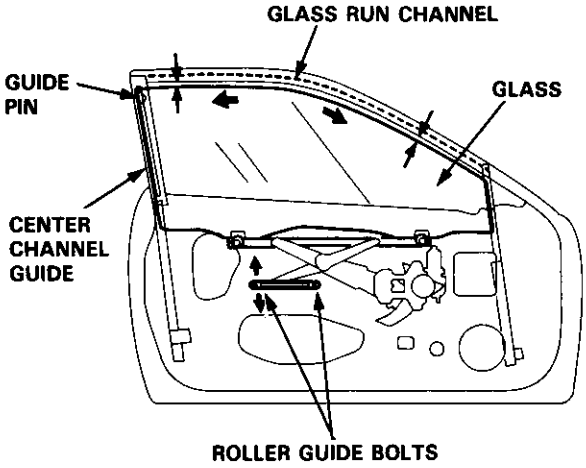

7. Tighten the roller guide bolts.

8. Check that the glass moves smoothly.

9. If necessary, adjust the front and center channels.

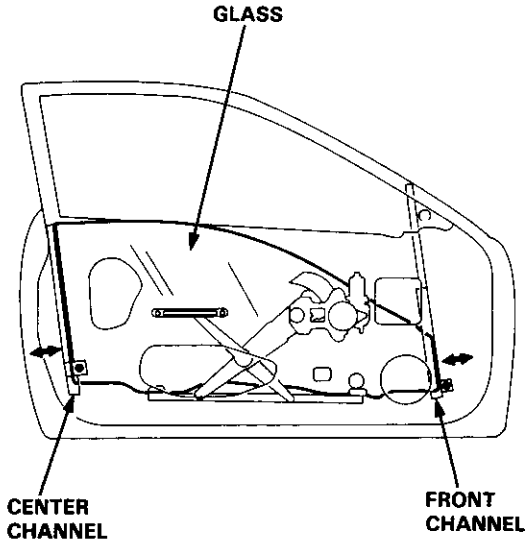

10. Raise the glass fully and check for gaps.

11. Check the glass operation.

    NOTE: Check that the glass contacts the glass run channel evenly.

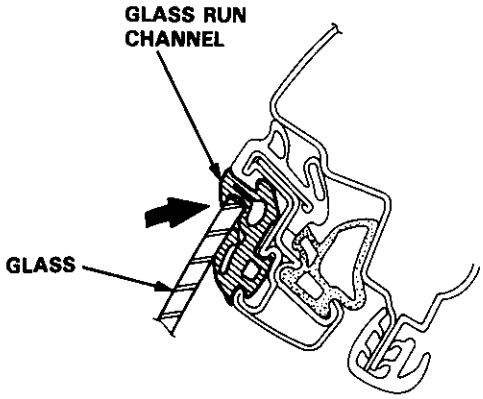

12. Check for water leaks.

    NOTE: Do not use high pressure water.

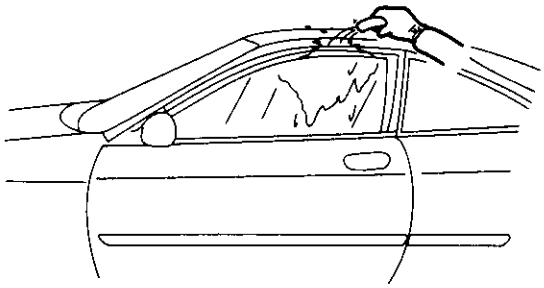

13. Route the door harness and connectors and fasten them to the door (see page 20-5).

14. Disconnect the power window switch from the door harness, then install the power window switch in the door panel (see page 20-16).

15. Attach the plastic cover, then install the door panel (see page 20-4).

Front Door Index

Sedan

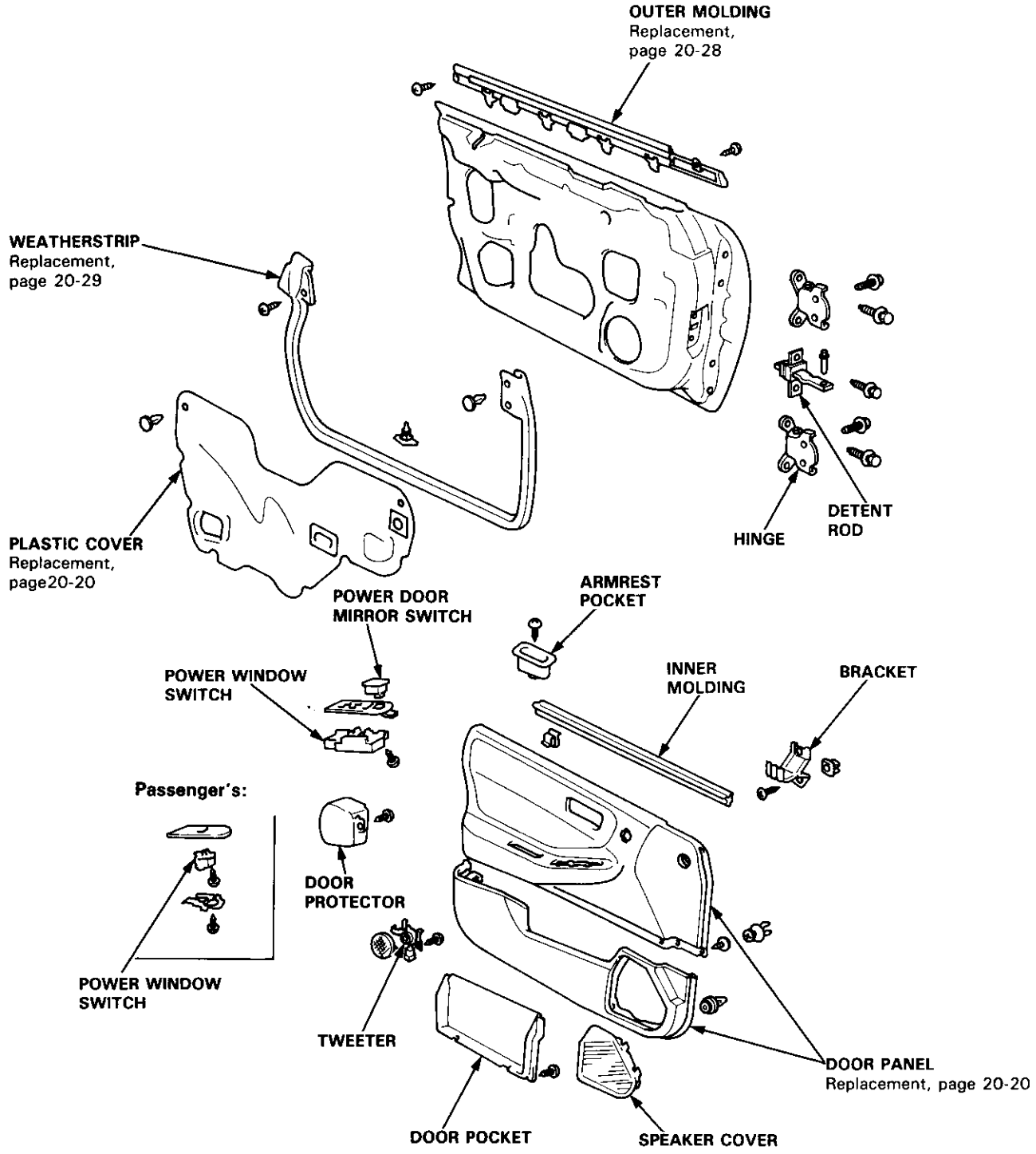

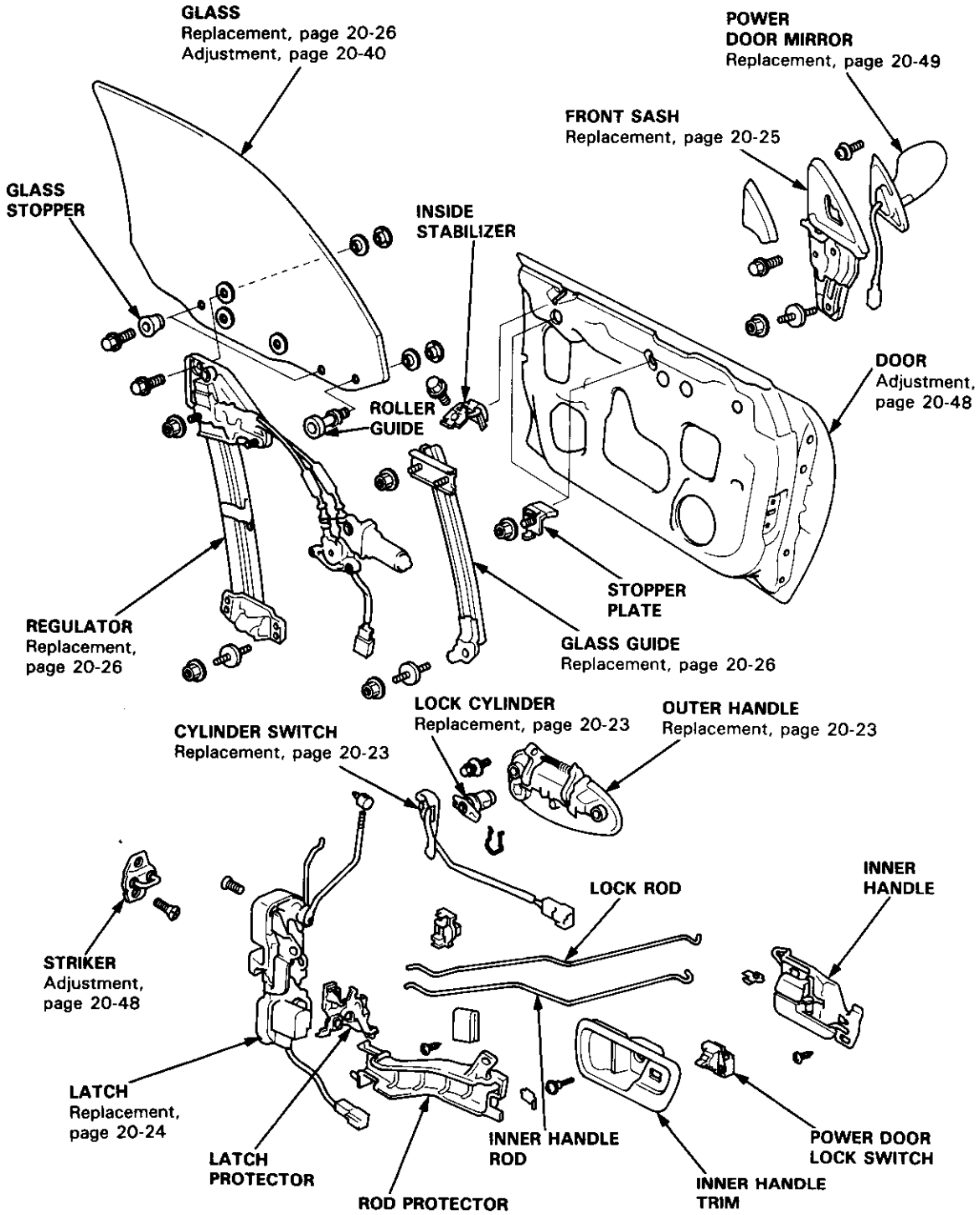
GLASS
Replacement, page 20-26
Adjustment, page 20-40
POWER
DOOR MIRROR
Replacement, page 20-49
FRONT SASH
Replacement, page 20-25
GLASS
STOPPER
INSIDE
STABILIZER
DOOR
Adjustment,
page 20-48
ROLLER
GUIDE
STOPPER
PLATE
REGULATOR
Replacement,
page 20-26
GLASS GUIDE
Replacement, page 20-26
LOCK CYLINDER
Replacement, page 20-23
OUTER HANDLE
Replacement, page 20-23
CYLINDER SWITCH
Replacement, page 20-23
INNER
HANDLE
LOCK ROD
STRIKER
Adjustment,
page 20-48
LATCH
Replacement,
page 20-24
LATCH
PROTECTOR
INNER HANDLE
ROD
POWER DOOR
LOCK SWITCH
ROD PROTECTOR
INNER HANDLE
TRIM

Door Panel/Plastic Cover Replacement

NOTE: Take care not to scratch the door panel and other parts.

1. Pry the cap and remove the screw.

◀ : Screw location, 1

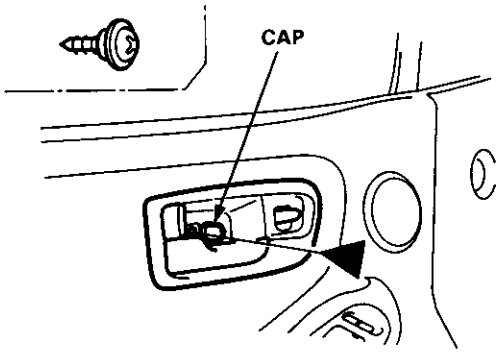

2. Remove the inner handle trim while pulling the inner handle.
   Disconnect the power door lock connector.

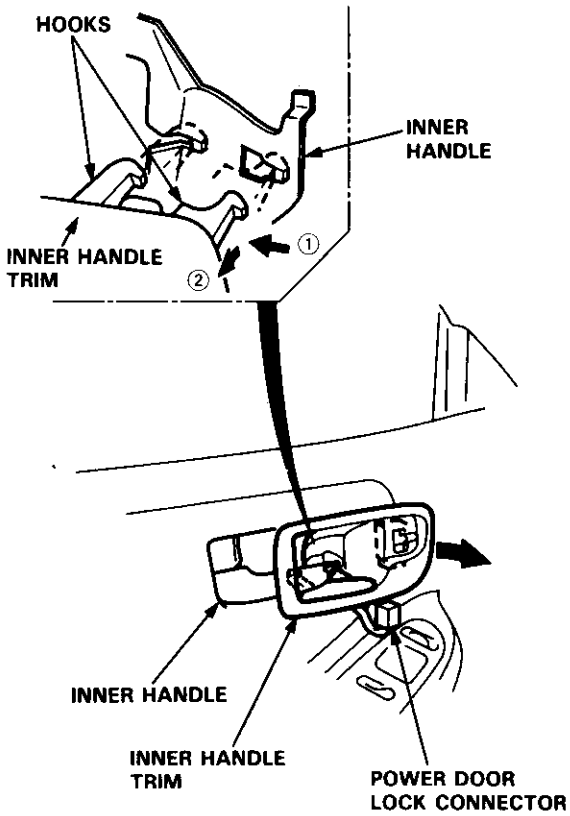

3. Remove the armrest pocket.

▼ : Screw location, 1

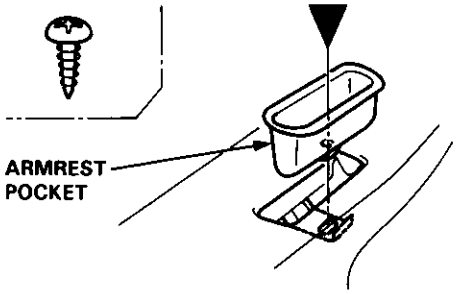

4. Release the clips that hold the door panel.

   NOTE: Remove the door panel with as little bending as possible to avoid creasing or breaking it.

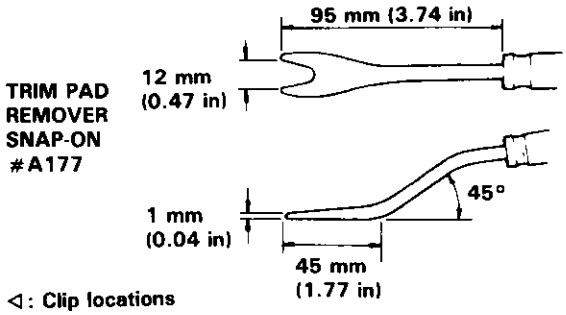

◁ : Clip locations
A◁ : Clip, 1 B◁ : Clip, 8

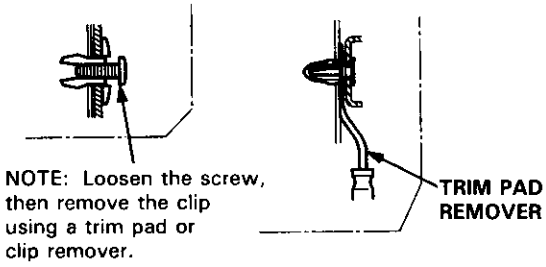

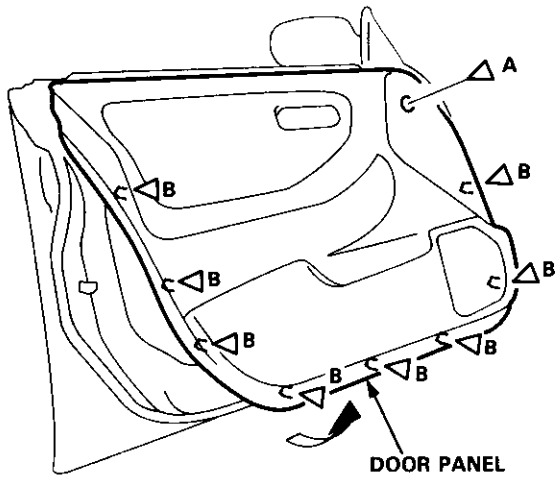

5. Detach the clips, and remove the door panel by pulling it upward.

NOTE: Take care not to twist or scratch the inner molding.

Disconnect the following:
- Power window connectors
- Power door mirror connector
- Tweeter connector

◯ Clip locations, 4

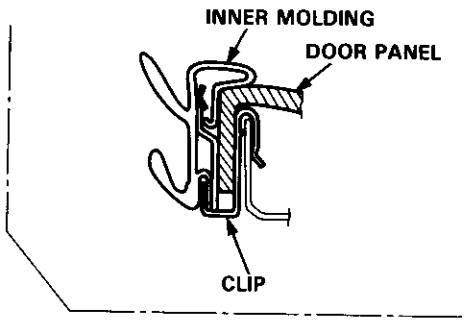

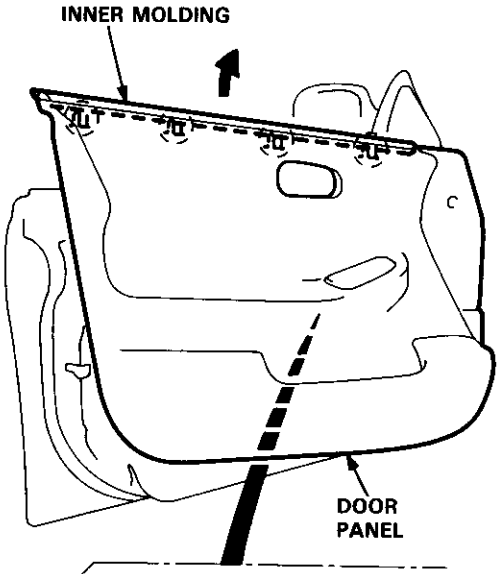

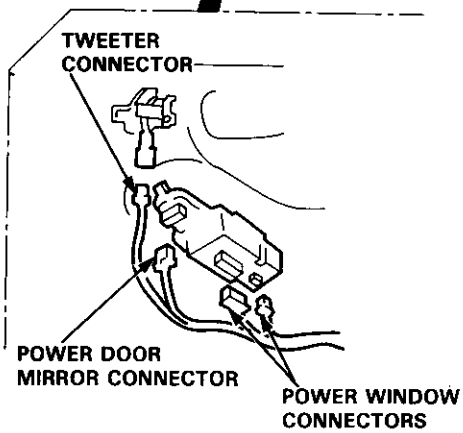

6. Remove the bracket, door lock unit and front speaker.

◀: Screw locations, 8

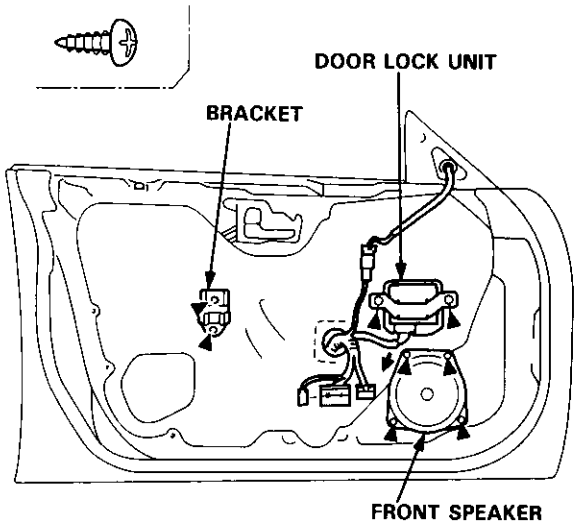

7. Remove the cover panel, then disconnect the power door mirror connector (see page 20-49).

8. Detach the grommets and harness clips, then carefully remove the plastic cover.

●: Grommet locations, 2

◉: Harness clip locations, 3

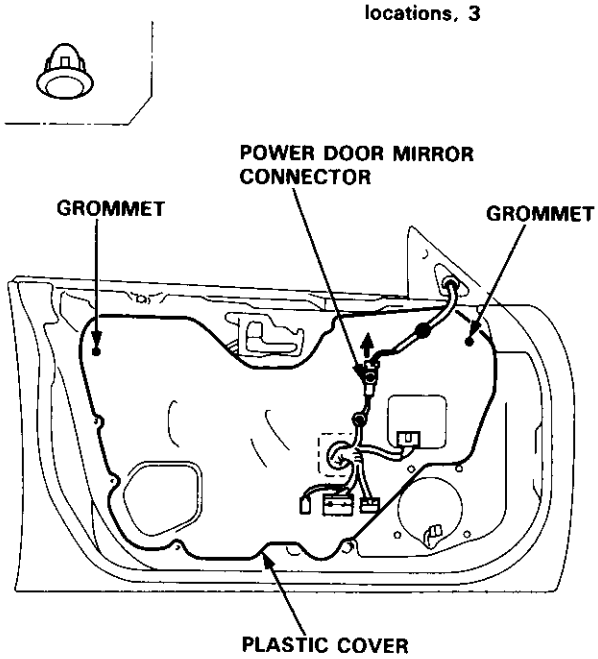

(cont'd)

Door Panel/Plastic Cover Replacement (cont'd)

9. Before installing the plastic cover, make sure the door harness and connectors are fastened correctly on the door.

● : Connector clip locations, 3
◉ : Harness clip locations, 8

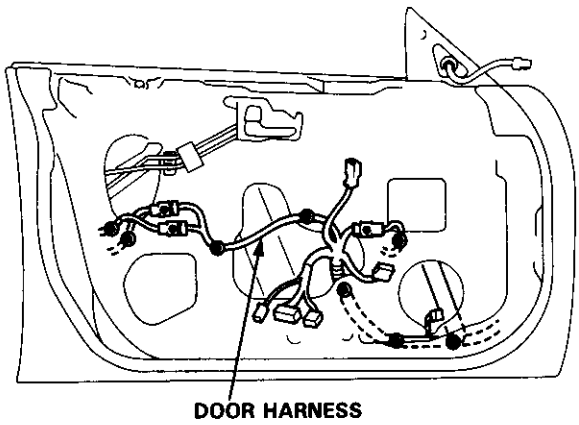

10. Install the plastic cover.

NOTE:
- Apply adhesive along the edge where necessary to maintain a continuous seal and prevent water leaks.
- Do not plug the elongated hole.

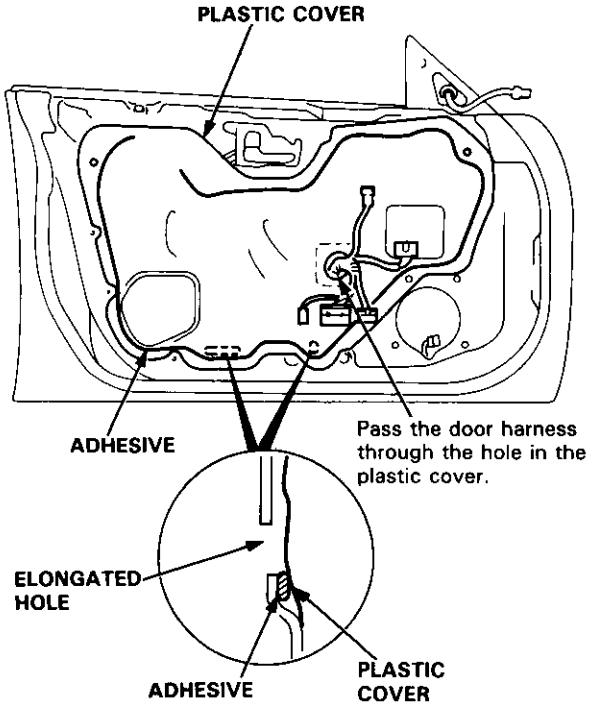

11. Install all removed parts, and fasten the door harness correctly.

● : Grommet locations, 2
◉ : Harness clip locations, 3

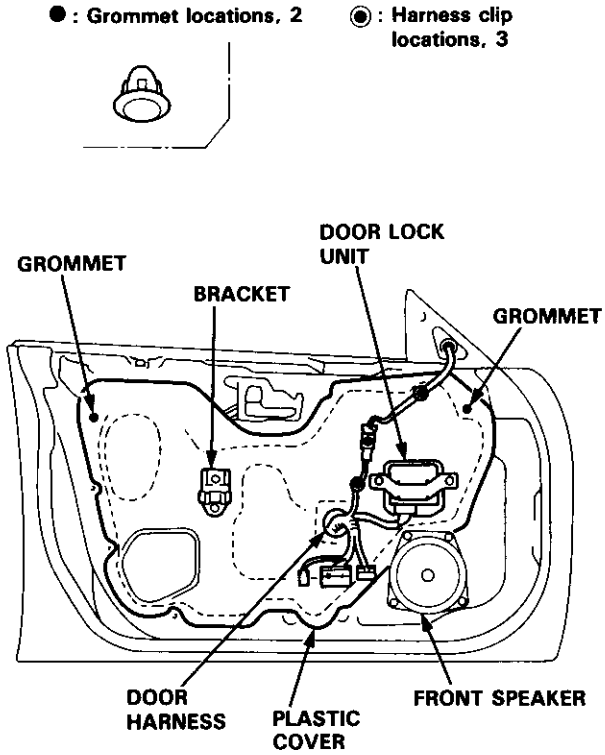

12. Install the door panel (see page20-21).

NOTE:
- Make sure the door harness is not pinched.
- If necessary, replace any damaged clips.
- Make sure the connectors are connected properly.

13. Install the armrest pocket and inner handle trim (see page 20-20).

NOTE: Make sure the connector is connected properly.

Outer Handle Replacement

NOTE: Raise the glass fully.

1. Remove:
   - Door panel (see page 20-20)
   - Plastic cover (see page 20-20)

2. Remove the rod protector.

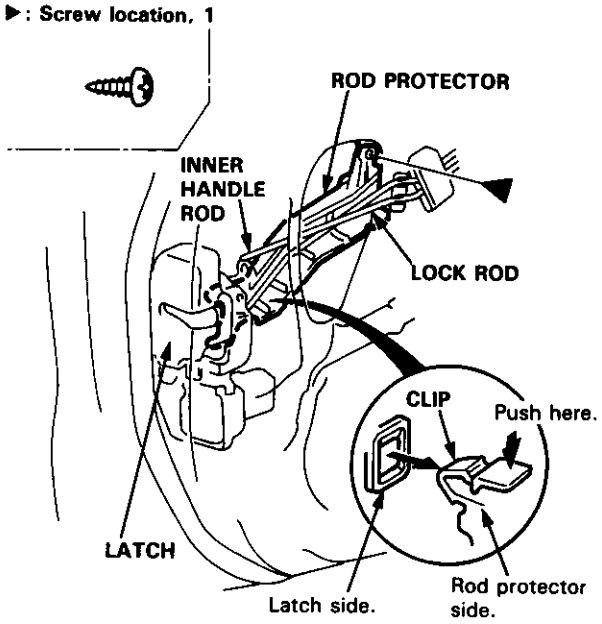

3. Remove the bolts and disconnect the connector.

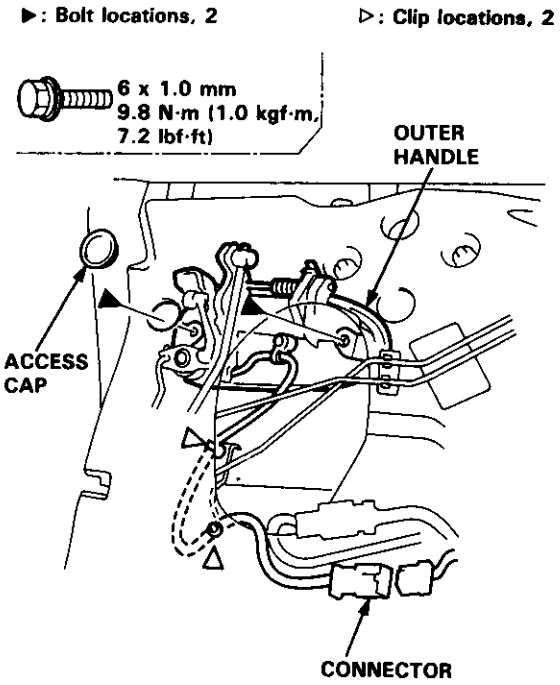

4. Remove the latch.

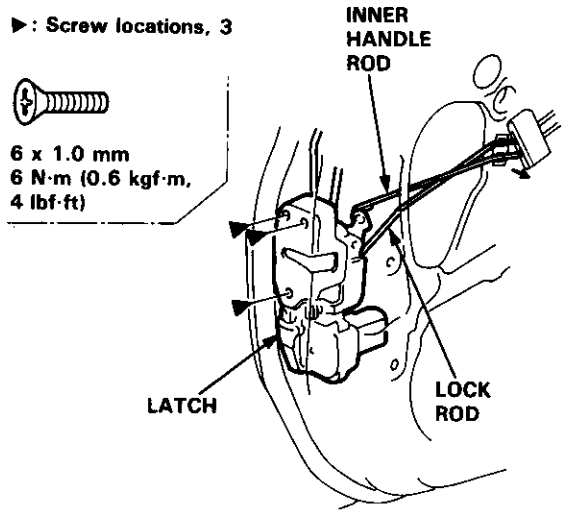

5. Pull out the outer handle with the latch.
   Pry the outer handle rod out of its joint using a flat tip screwdriver.

   NOTE:
   - To ease reassembly, note the location Ⓐ of the outer handle rod on the joint before disconnecting it.
   - Take care not to bend the outer handle rod.
   - Use a shop towel to protect the opening in the door.

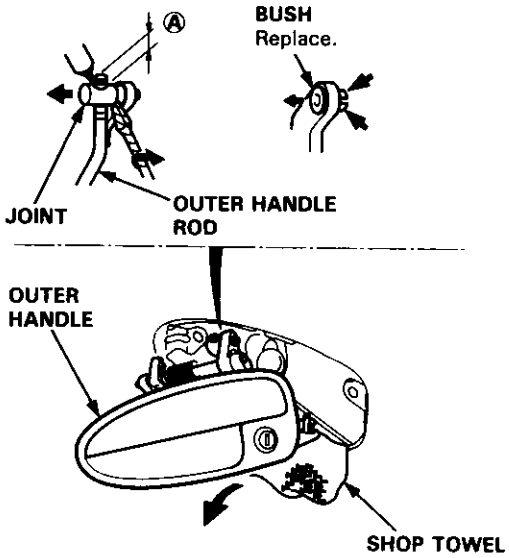

(cont'd)

Outer Handle Replacement (cont'd)

6. Disconnect the cylinder rod as shown.

   NOTE: Take care not to damage the lock cylinder joint.

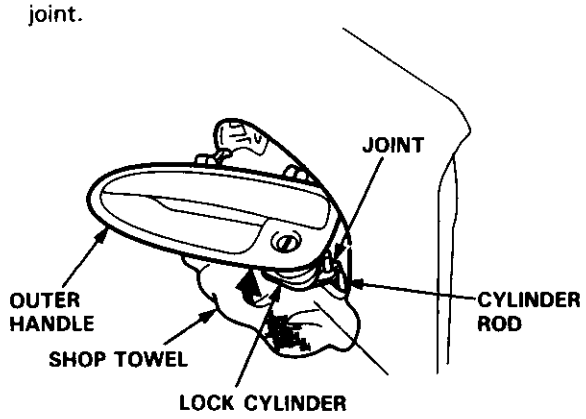

7. Remove the cylinder switch from the outer handle.

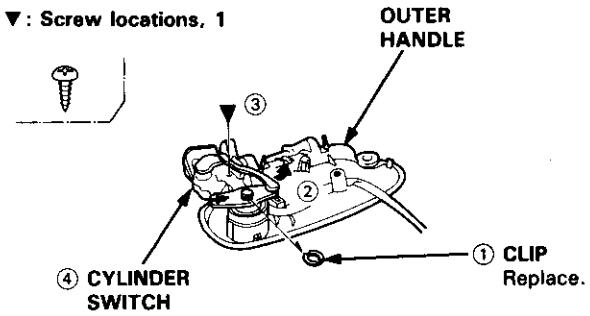

8. Pull out the retainer clip, then remove the lock cylinder.

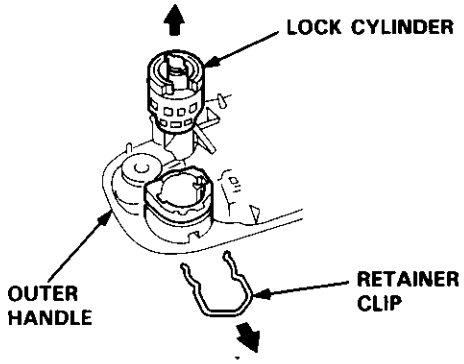

9. Installation is the reverse of the removal procedure.

   NOTE:
   - Make sure the outer handle rod and connector are connected securely.
   - Make sure the wire harness is routed properly.
   - Check the door lock and open operations.

Latch Replacement

NOTE: Raise the glass fully.

1. Remove:
   - Door panel (see page 20-20)
   - Plastic cover (see page 20-20)
   - Outer handle (see page 20-23)

2. Remove the screws and disconnect the connector, then remove the inner handle and latch.

   NOTE: Take care not to bend the rods.

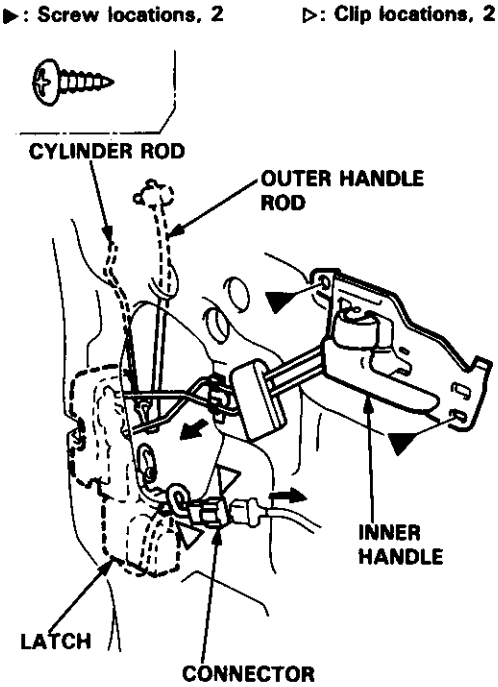

3. Installation is the reverse of the removal procedure.

   NOTE: Make sure the inner handle rod, lock rod and connector are connected properly.

Front Sash Replacement

NOTE: Lower the glass.

1. Remove:
   - Door panel (see page 20-20)
   - Plastic cover (see page 20-20)
   - Power door mirror (see page 20-49)
   - Outer molding (see page 20-38)

2. Detach the clips, then pry the weatherstrip away from the front sash.

3. Remove the bolts and locknut.

   NOTE:
   - Hold the adjusting bolt with a hex wrench when removing the locknut.
   - Scribe a line around the locknut to show the original adjustment.

▶: Bolt locations, 2 ●: Nut location, 1

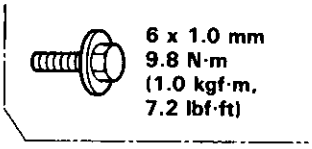

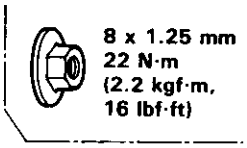

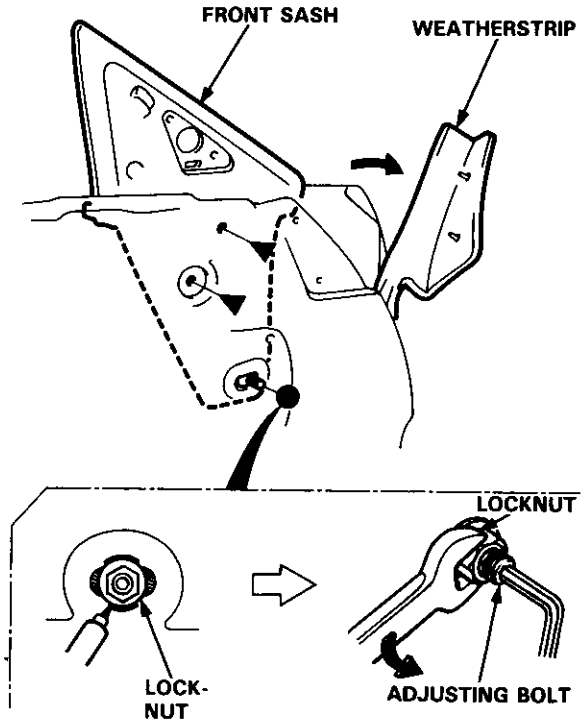

4. Remove the front sash through the center hole in the door as shown.

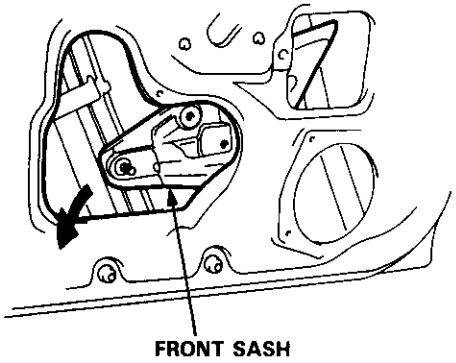

5. Installation is the reverse of the removal procedure.

   NOTE: After installing, adjust the position of the front sash as necessary.

   - Align the front sash with the glass using the adjusting bolt at the bottom of the front sash.

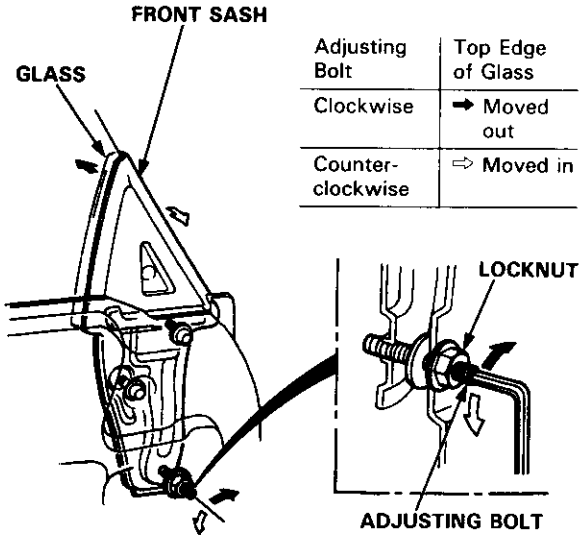

Adjusting Bolt	Top Edge of Glass
Clockwise	➡ Moved out
Counter-clockwise	⇨ Moved in

- Check for water leaks.

  NOTE: Do not high pressure water.

Glass/Regulator/Glass Guide Replacement

1. Remove:
   - Door panel (see page 20-20)
   - Plastic cover (see page 20-20)

2. Remove the power window switch from the door panel, then connect the door harness (see page 20-41).

3. Move the glass until you can see the glass stoppers, then remove them.

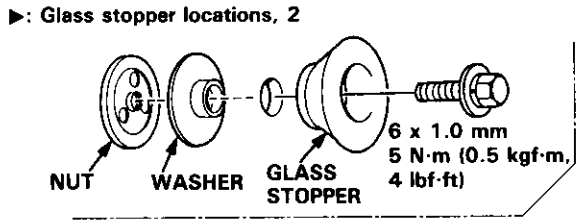

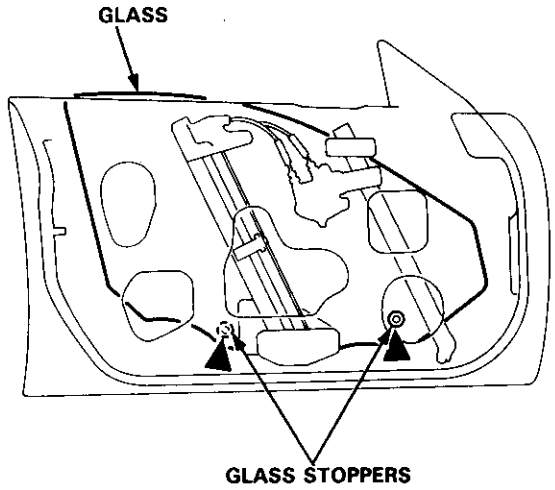

4. Carfully move the glass until you can see the glass mounting bolts, then remove them.

NOTE: Scribe a line around the glass mounting bolts to show the original adjustment.

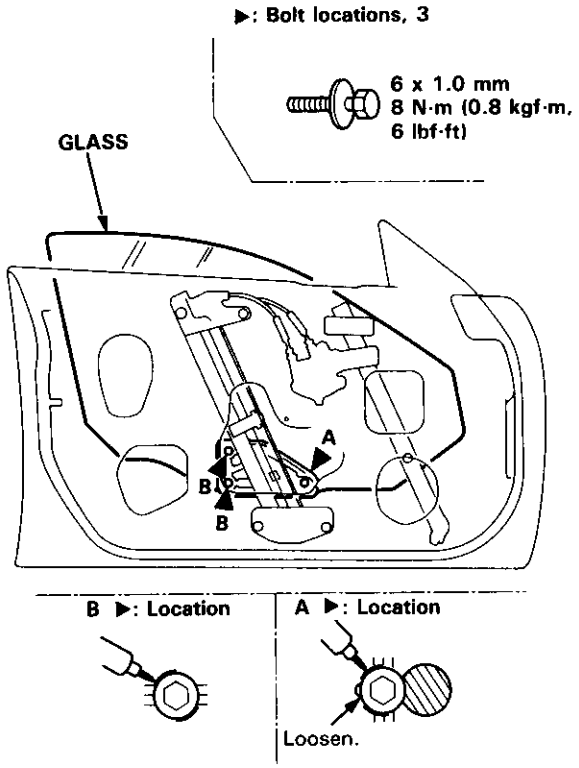

5. Carefully pull the glass out of the window slot.

   NOTE: Take care not to damage (A) location on the front sash.

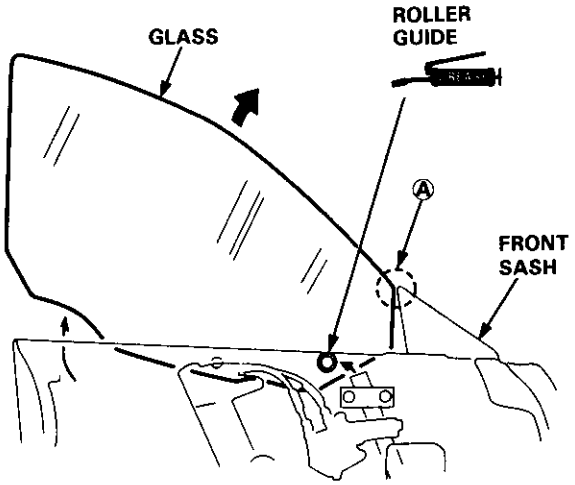

6. Remove the inner handle (see page 20-24).

7. Disconnect the connector, and remove the regulator through the center hole in the door.

NOTE:
- Hold the adjusting bolts with a hex wrench when removing the locknuts.
- Scribe a line around the locknuts to show the original adjustment.

● : Nut locations, 4

8 x 1.25 mm
22 N·m (2.2 kgf·m, 16 lbf·ft)

▲ : Bolts locations, 3

6 x 1.0 mm
8 N·m (0.8 kgf·m, 6 lbf·ft)
Loosen.

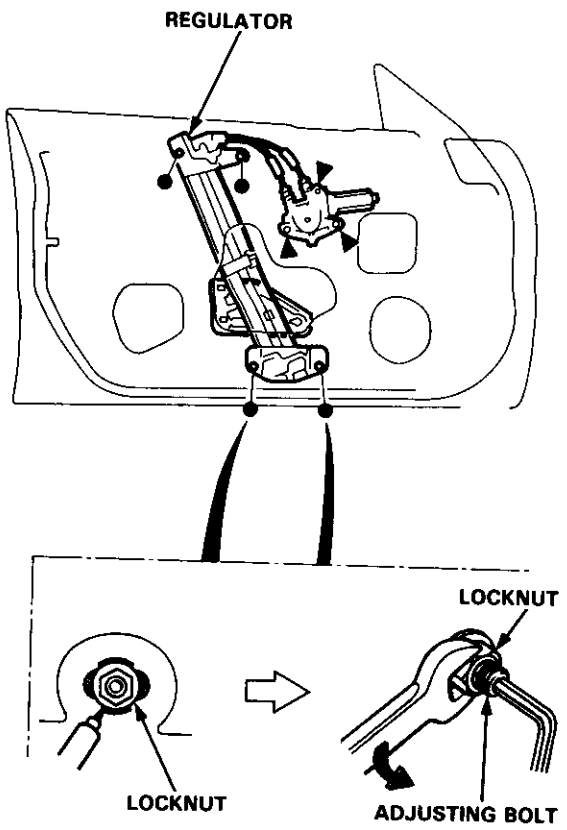

8. Remove the glass guide.

NOTE:
- Hold the adjusting bolt with a hex wrench when removing the locknut.
- Scribe a line around the mounting nut to show the original adjustment.

●: Nut locations, 3

8 x 1.25 mm
22 N·m (2.2 kgf·m, 16 lbf·ft)

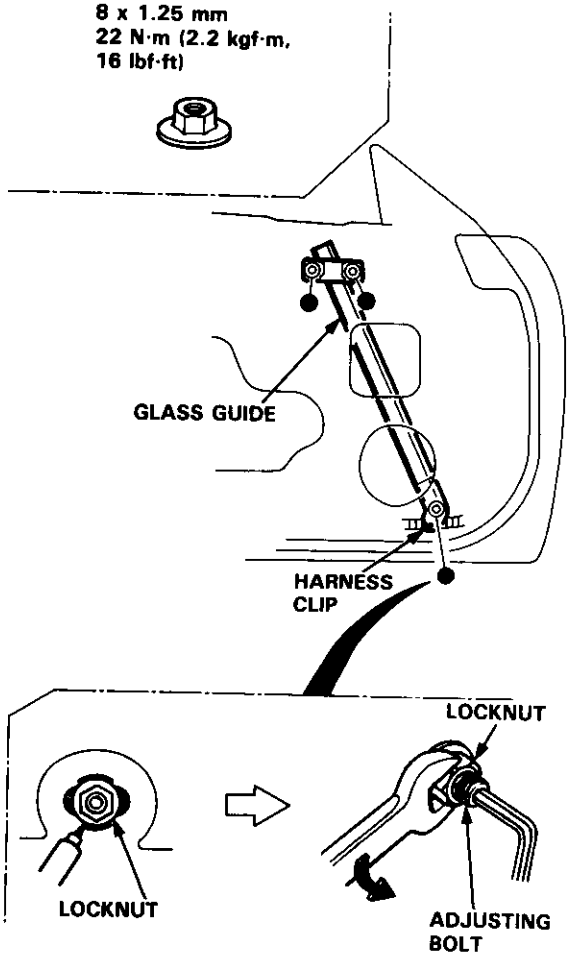

(cont'd)

Glass/Regulator/Glass Guide Replacement (cont'd)

9. Grease all the sliding surfaces of the regulator and glass guide where shown.

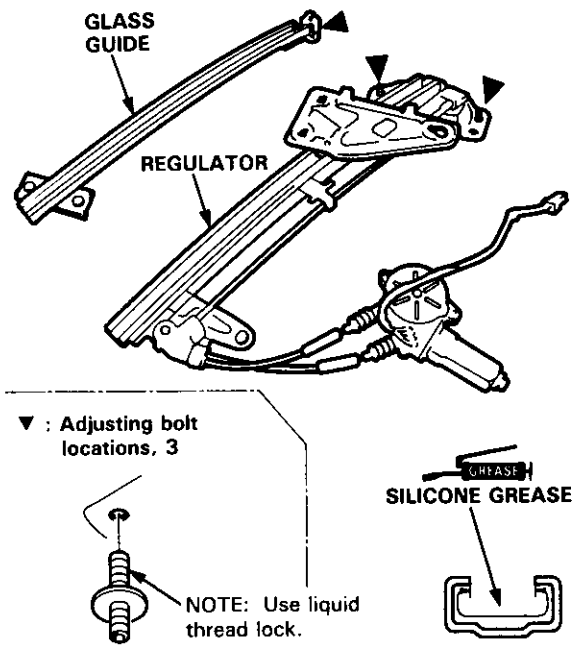

10. Roll the glass up and down to see if it moves freely without binding. Also make sure that there is no clearance between the glass and weatherstrip when the glass is closed. Adjust the position of the glass as necessary (see page 20-40).

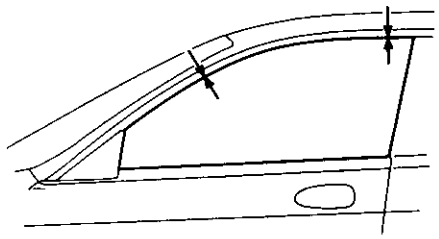

11. Attach the door harness to the door correctly (see page 20-22).

12. Disconnect the power window switch from the door harness, then install the power window switch on the door panel (see page 20-41).

13. When reinstalling the plastic cover, apply adhesive along the edge where neccessary to maintain a continuous seal and prevent water leaks (see page 20-22).

14. Install the door panel (see page 20-21).

Outer Molding Replacement

NOTE: Lower the glass fully.

1. Remove:
   - Door panel (see page 20-20)
   - Power door mirror (see page 20-49)

2. Peel the weatherstrip away from the door (see page 20-29), then remove the screw.

3. Starting at the rear, pry the outer molding up and detach the clips, then remove the outer molding.

   NOTE: Take care not to twist or scratch the outer molding.

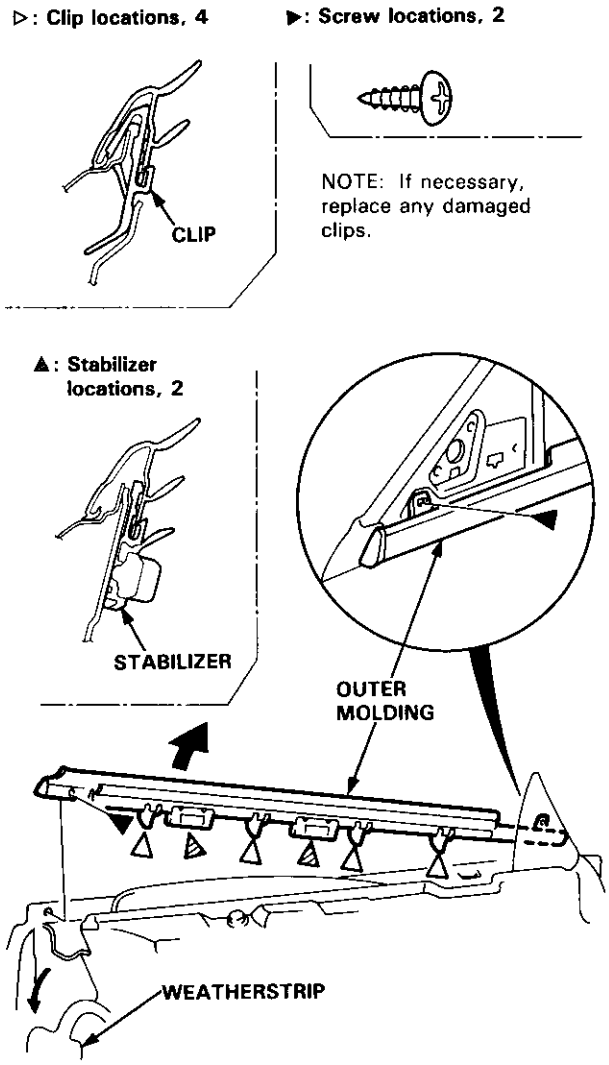

4. Installation is the reverse of the removal procedure.

Weatherstrip Replacement

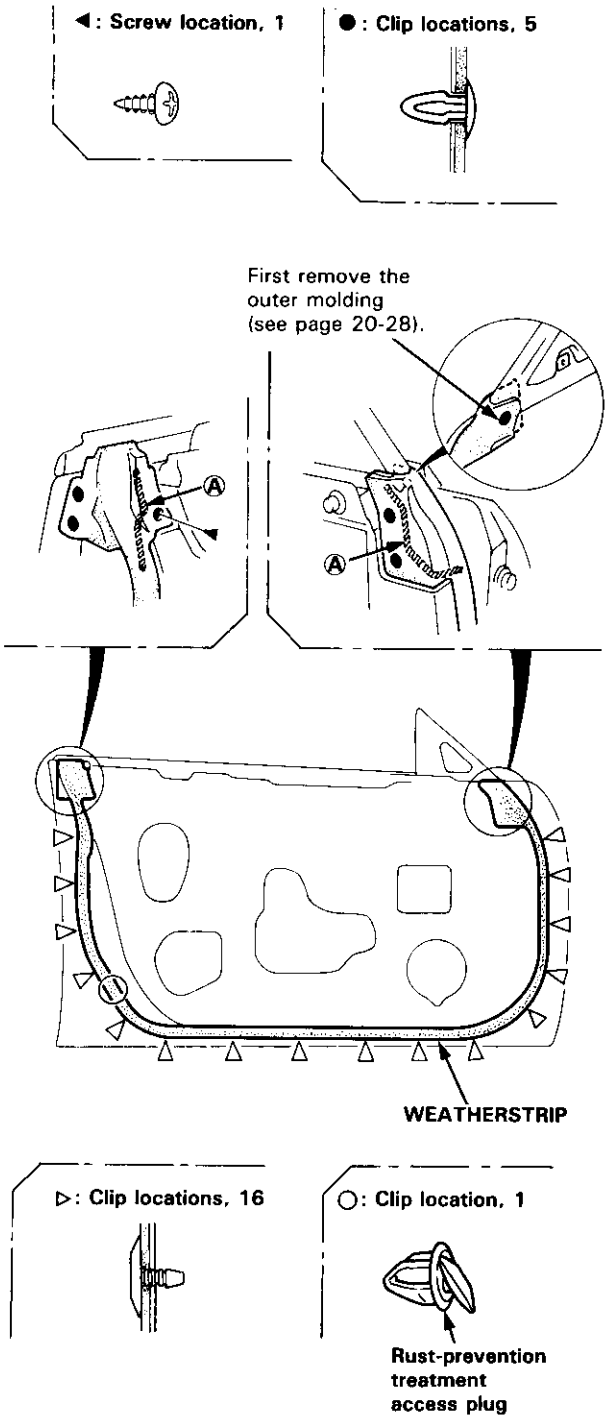

NOTE:

- Before installing the weatherstrip, apply clear sealant to the location Ⓐ.

Sealant: Cemedine #8500, or equivalent

- If necessary, replace any damaged clips.

Rear Door Index

Sedan

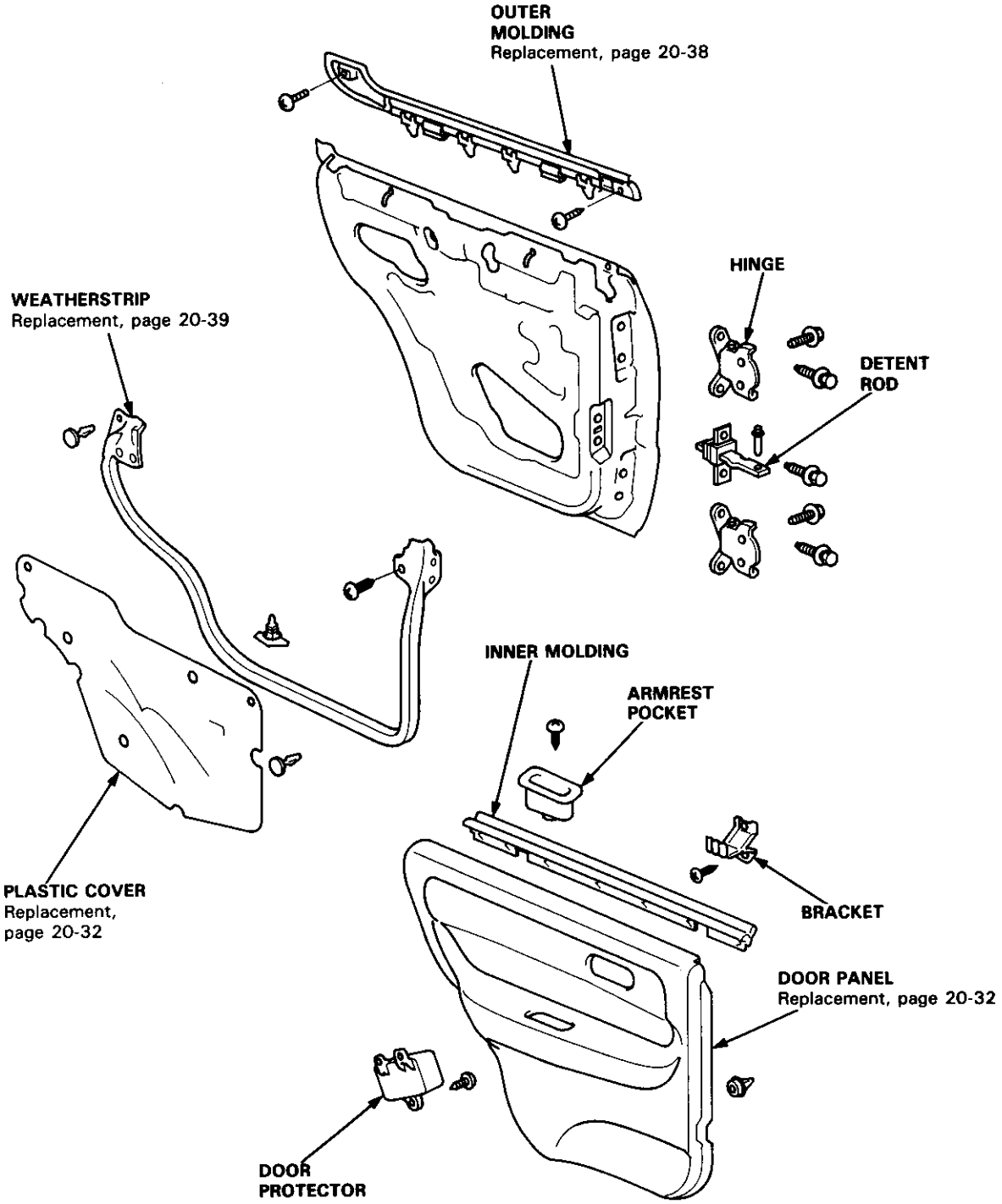

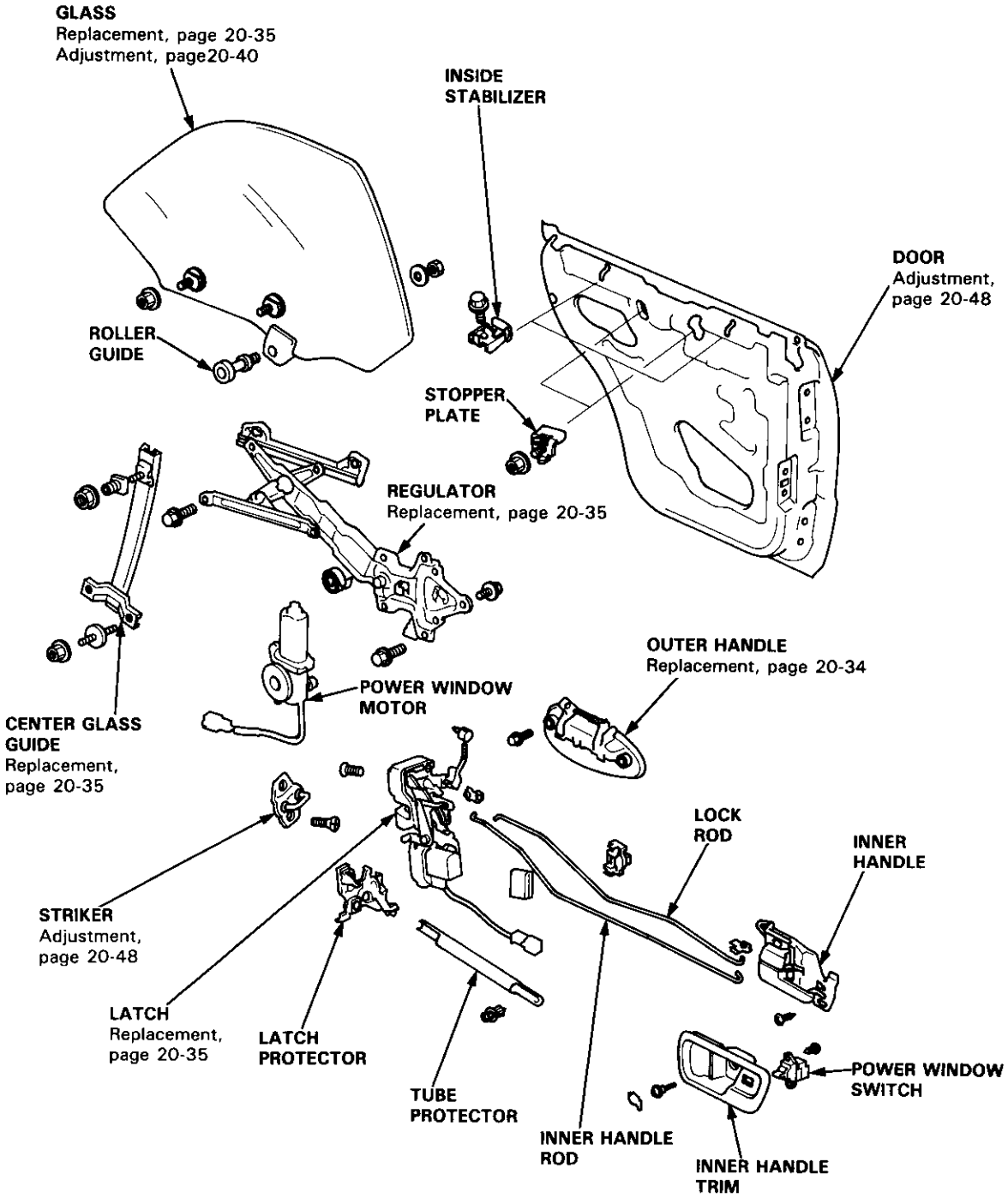
GLASS
Replacement, page 20-35
Adjustment, page20-40
INSIDE STABILIZER
DOOR
Adjustment, page 20-48
ROLLER GUIDE
STOPPER PLATE
REGULATOR
Replacement, page 20-35
OUTER HANDLE
Replacement, page 20-34
POWER WINDOW MOTOR
CENTER GLASS GUIDE
Replacement, page 20-35
LOCK ROD
INNER HANDLE
STRIKER
Adjustment, page 20-48
LATCH
Replacement, page 20-35
LATCH PROTECTOR
TUBE PROTECTOR
INNER HANDLE ROD
POWER WINDOW SWITCH
INNER HANDLE TRIM

Door Panel/Plastic Cover Replacement

NOTE: Take care not to scratch the door panel and other parts.

1. Pry the cap and remove the screw.

   ◀ : Screw location, 1

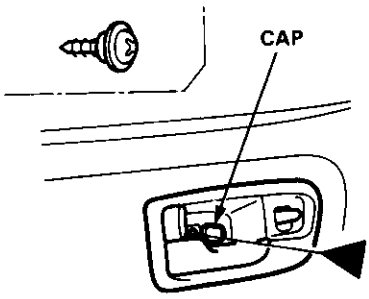

2. Remove the inner handle trim while pulling the inner handle.
   Disconnect the power window switch connector.

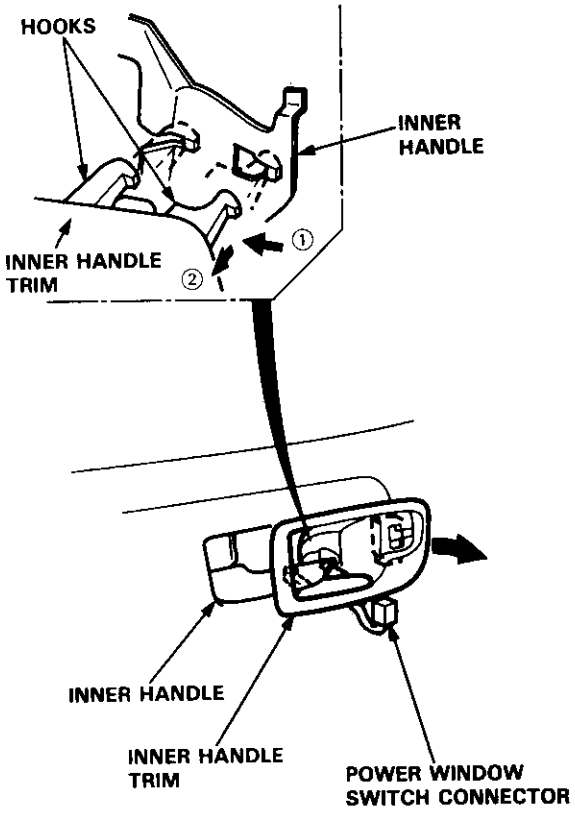

3. Remove the armrest pocket.

   ▼ : Screw location, 1

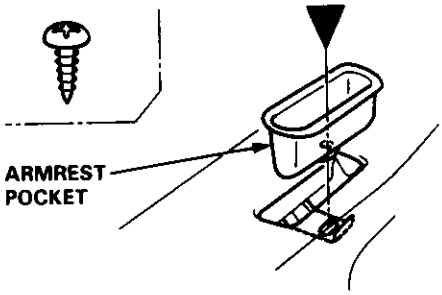

4. Release the clips that hold the door panel.

   NOTE: Remove the door panel with as little bending as possible to avoid creasing or breaking it.

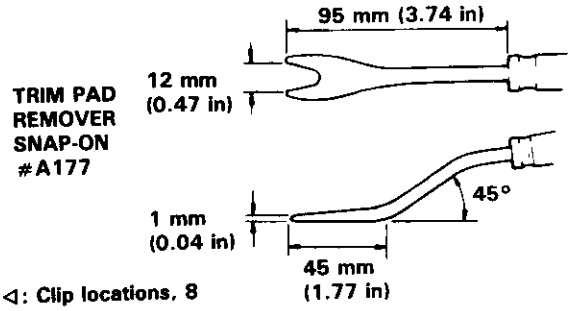

◁: Clip locations, 8

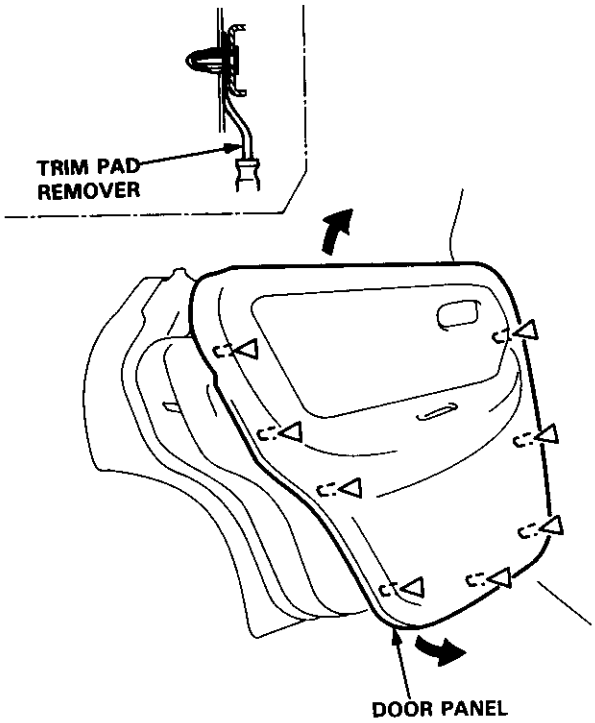

5. Remove the door panel by pulling it upward.

6. Remove the bracket and detach the grommets, then carefully remove the plastic cover.

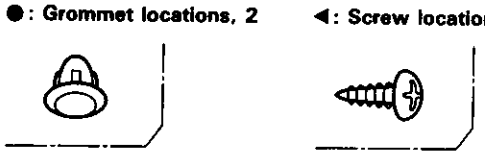

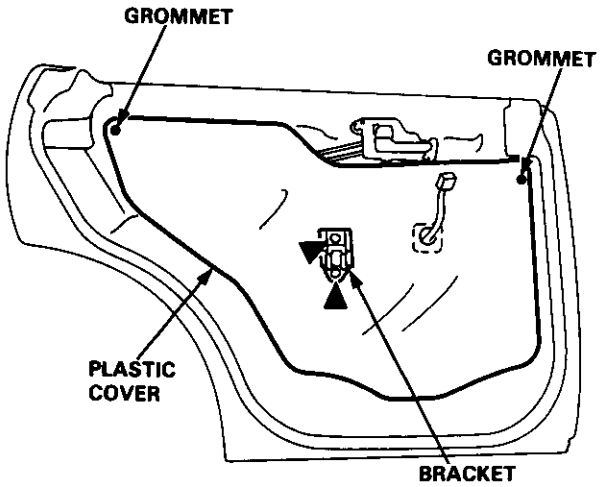

7. Before installing the plastic cover, make sure the door harness and connectors are fastened correctly on the door.

●: Connector clip locations, 2
◉: Harness clip locations, 5

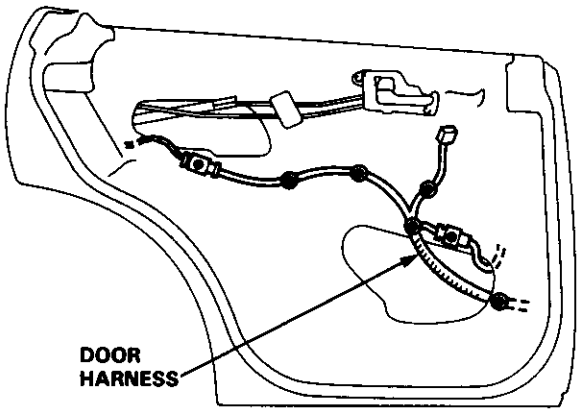

8. Install the plastic cover and bracket.

NOTE:
- Apply adhesive along the edge where necessary to maintain a continuous seal and prevent water leaks.
- Do not plug the elongated hole.

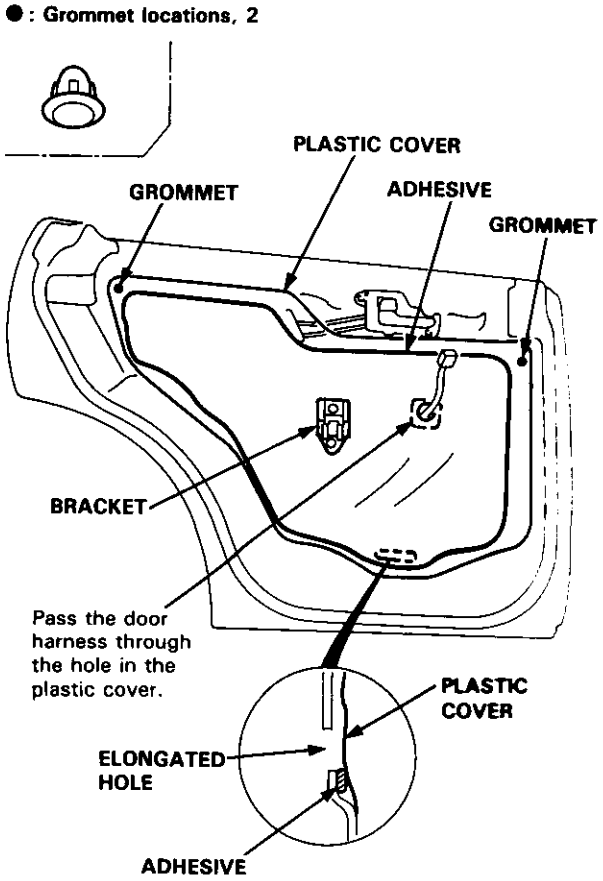

9. Install the door panel (see page 20-32).

NOTE:
- Make sure the door harness is not pinched.
- If necessary, replace any damaged clips.
- Make sure the connectors are connected properly.

10. Install the armrest pocket and inner handle trim (see page 20-32).

NOTE: Make sure the connector is connected properly.

Outer Handle Replacement

NOTE: Raise the glass fully.

1. Remove:
   - Door panel (see page 20-32)
   - Plastic cover (see page 20-32)

2. Remove the screws and clip, then move the latch.

▶: Screw locations, 3

6 x 1.0 mm
6 N·m (0.6 kgf·m, 4 lbf·ft)

△: Clip location, 1

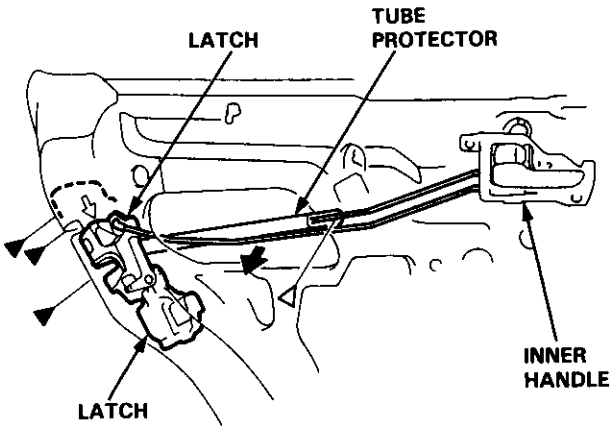

3. Remove the bolts.

▶: Bolt locations, 2

6 x 1.0 mm
9.8 N·m (1.0 kgf·m, 7.2 lbf·ft)

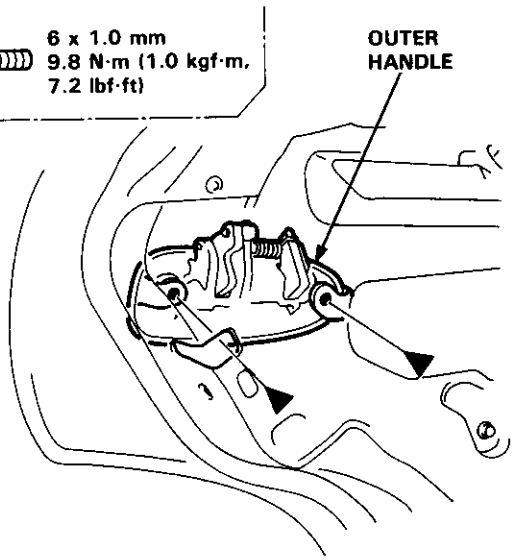

4. Pull out the outer handle with the latch.
   Pry the outer handle rod out of its joint using a flat tip screwdriver.

   NOTE:
   - To ease reassembly, note the location Ⓐ of the outer handle rod on the joint before disconnecting it.
   - Take care not to bend the outer handle rod.
   - Use a shop towel to protect the opening in the door.

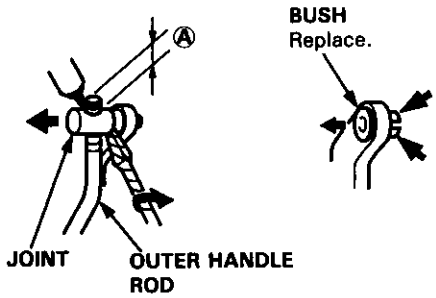

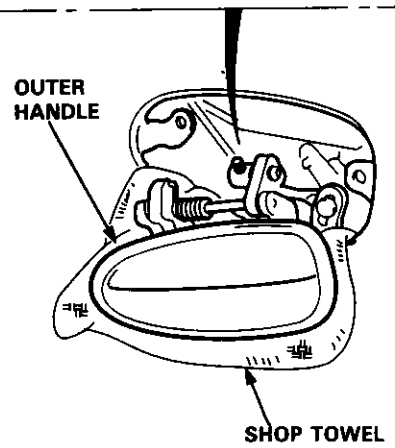

5. Installation is the reverse of the removal procedure.

   NOTE: Check the door lock and open operations.

Latch Replacement

NOTE: Raise the glass fully.

1. Remove:
   - Door panel (see page 20-32)
   - Plastic cover (see page 20-32)
   - Outer handle (see page 20-34)

2. Remove the screws and disconnect the connector, then remove the inner handle and latch.

   NOTE: Take care not to bend the rods.

▶: Screw locations, 2

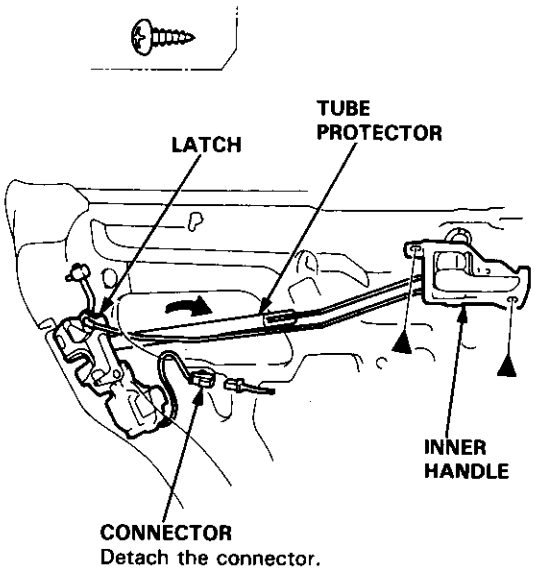

3. Installation is the reverse of the removal procedure.

   NOTE: Make sure the inner handle rod, lock rod and connector are connected properly.

Glass/Regulator/Center Glass Guide Replacement

1. Remove:
   - Door panel (see page 20-32)
   - Plastic cover (see page 20-32)

2. Connect the power window switch to the door harness (see page 20-41).

3. Peel the weatherstrip away from the door (see page 20-39).

4. Loosen the inside stabilizers.

   NOTE: Scribe a line around the bolts to show the original adjustment.

   Carefully move the glass until you can see the glass mounting nuts, then remove them.

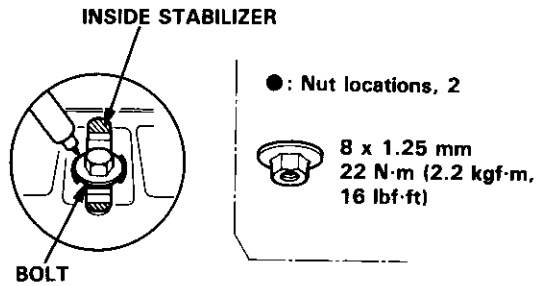

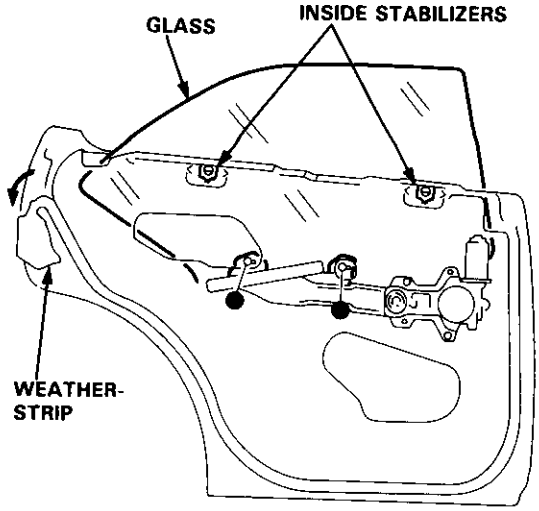

(cont'd)

Glass/Regulator/Center Glass Guide Replacement (cont'd)

5. Carefully remove the glass from the window slot as shown.

   NOTE: Take care not to drop the glass inside the door.

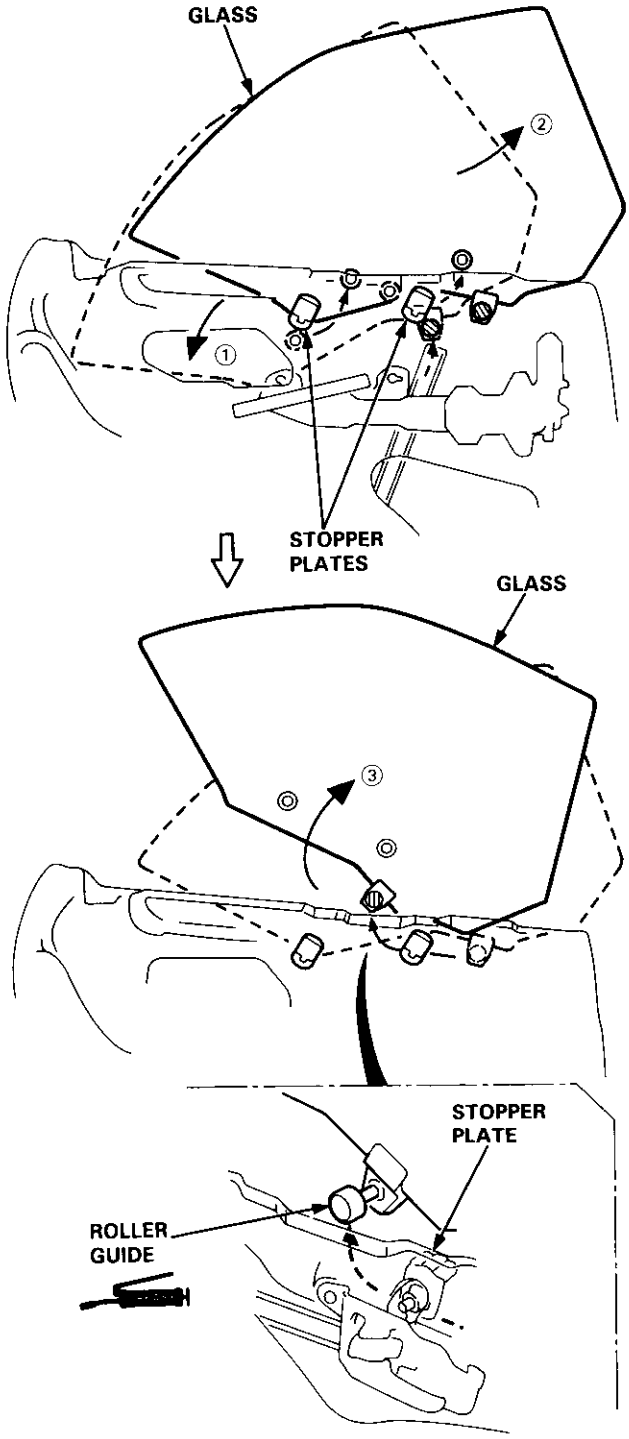

6. Remove the center glass guide.

   NOTE:
   - Hold the adjusting bolts with a hex wrench when removing the locknuts.
   - Scribe a line around the locknuts to show the original adjustment.

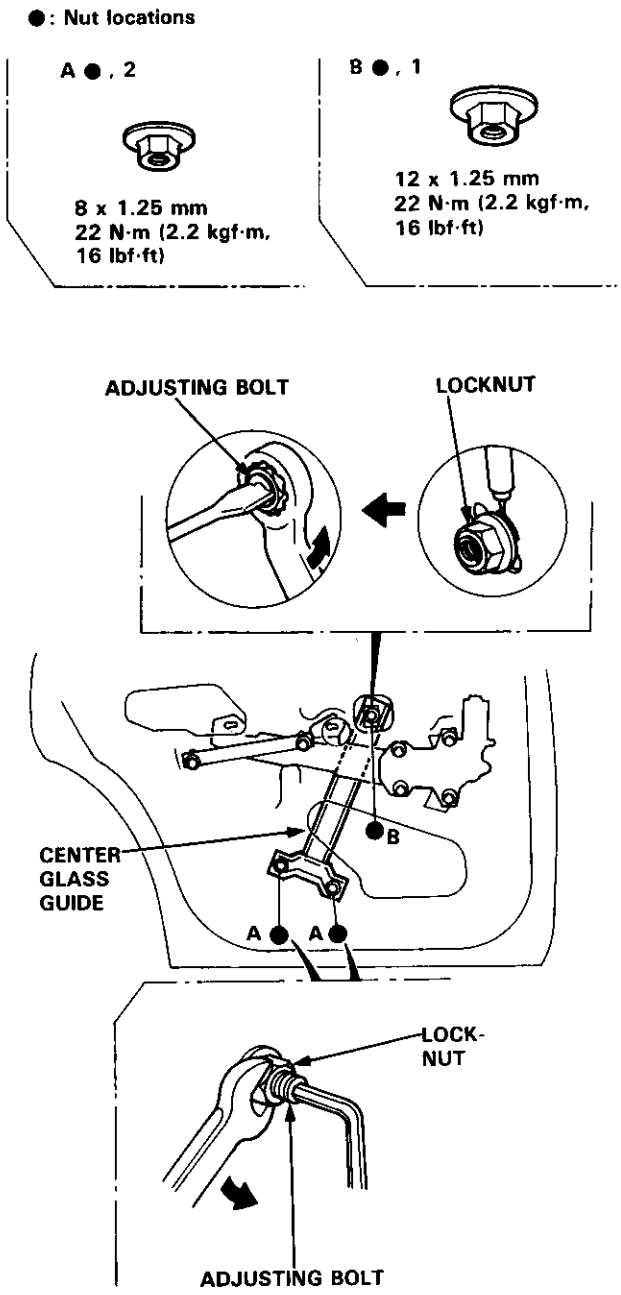

7. Disconnect the connector, and remove the regulator through the center hole in the door.

   NOTE: Scribe a line around the roller guide bolts to show the original adjustment.

▶: Bolt locations

▶ A, 4
6 x 1.0 mm
8 N·m (0.8 kgf·m, 6 lbf·ft)

▶ B, 2
6 x 1.0 mm
8 N·m (0.8 kgf·m, 6 lbf·ft)

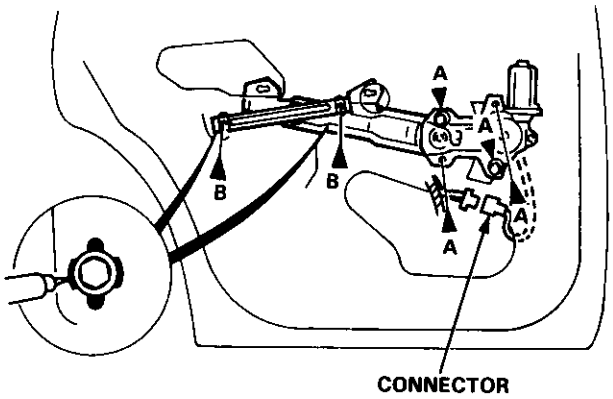

8. Remove the power window motor from the regulator.

   NOTE: Before removing the power window motor, mark the location by scribing a line across the sector gear and regulator.

▼: Bolt locations, 3

6 x 1.0 mm
7 N·m (0.7 kgf·m, 5 lbf·ft)

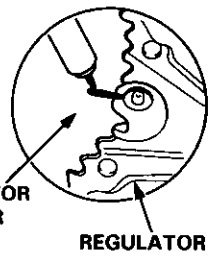

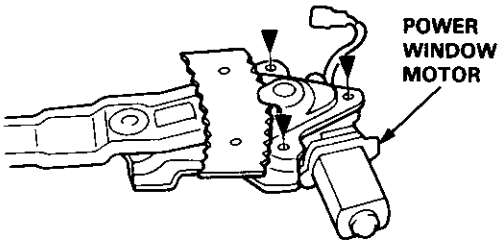

9. Grease all the sliding surfaces of the regulator and center glass guide where shown.

10. Install the power window motor on the regulator.

11. Check that the regulator moves smoothly by connecting a 12 V battery to the power window motor (see section 23).

▼: Adjusting bolt locations, 2

NOTE: Use liquid thread lock.

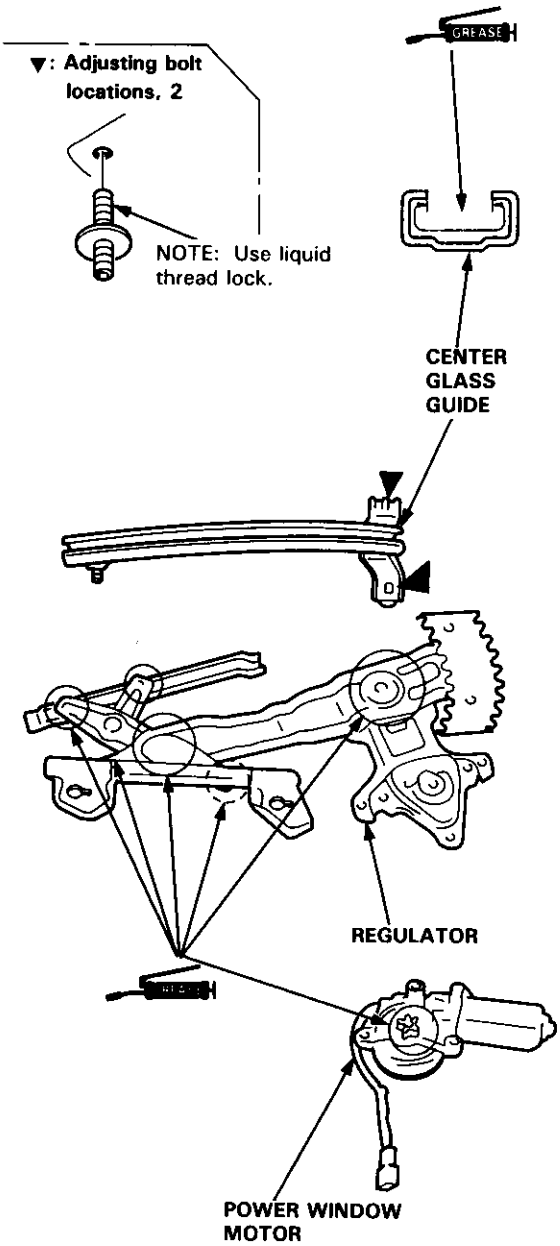

(cont'd)

Glass/Regulator/Center Glass Guide Replacement (cont'd)

12. Roll the glass up and down to see if it moves freely without binding. Also make sure that there is no clearance between the glass and weatherstrip when the glass is closed. Adjust the position of the glass as necessary (see page 20-40).

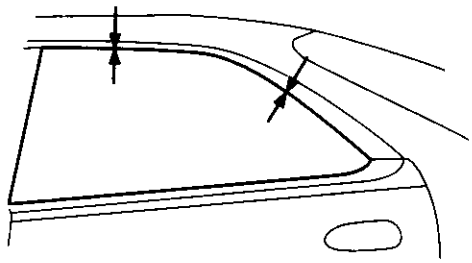

13. Attach the door harness to the door correctly (see page 20-33).

14. Disconnect the power window switch from the door harness.

15. When reinstalling the plastic cover, apply adhesive along the edge where neccessary to maintain a continuous seal and prevent water leaks (see page 20-33).

16. Install the door panel (see page 20-32).

Outer Molding Replacement

NOTE: Lower the glass fully.

1. Remove the door panel (see page 20-32).

2. Peel the weatherstrip away from the door (see page 20-39), then remove the screw.

3. Starting at the rear, pry the outer molding up and detach the clips, then remove the outer molding.

   NOTE: Take care not to twist or scratch the outer molding.

▷: **Clip locations, 4**

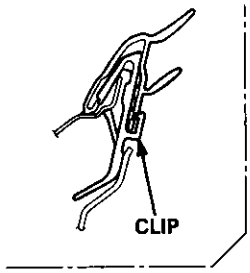

A ▶ : Screw location, 1

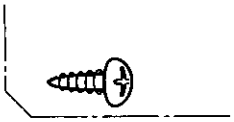

NOTE: If necessary, replace any damaged clips.

▶: **Stabilizer locations, 2**

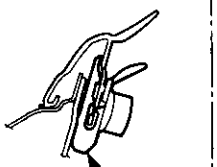

B ▶ : Screw location, 1

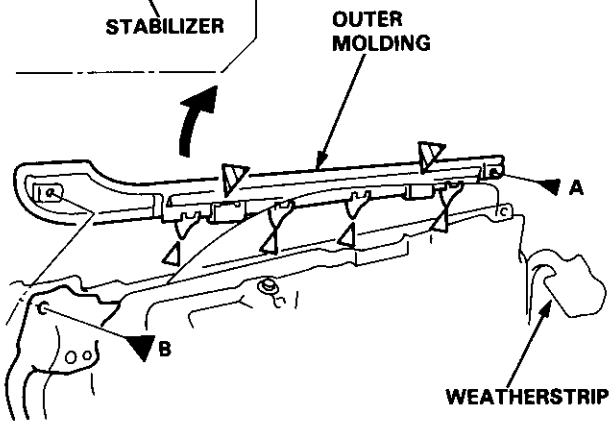

4. Installation is the reverse of the removal procedure.

Weatherstrip Replacement

▶ : Screw locations

A ▶ , 1

B ▶ , 2

● : Clip locations, 3

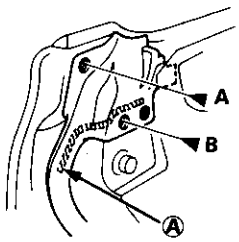

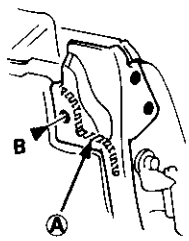

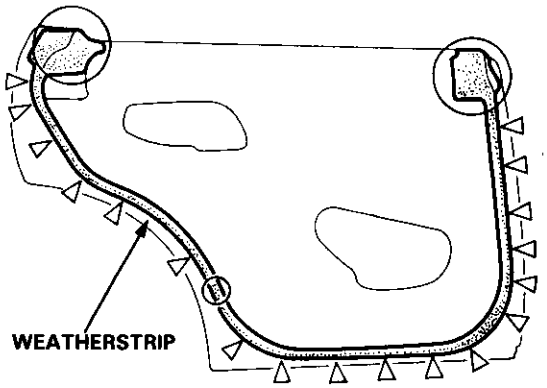

▷ : Clip locations, 18

○: Clip location, 1

Rust-prevention treatment access plug

NOTE:

- Before installing the weatherstrip, apply clear sealant to the location Ⓐ.

Sealant: Cemedine #8500, or equivalent

- If necessary, replace any damaged clips.

Glass Adjustment

*: Adjusting bolt/locknut locations
NOTE: Take care not to damage the Ⓐ location on the front sash.

Front:

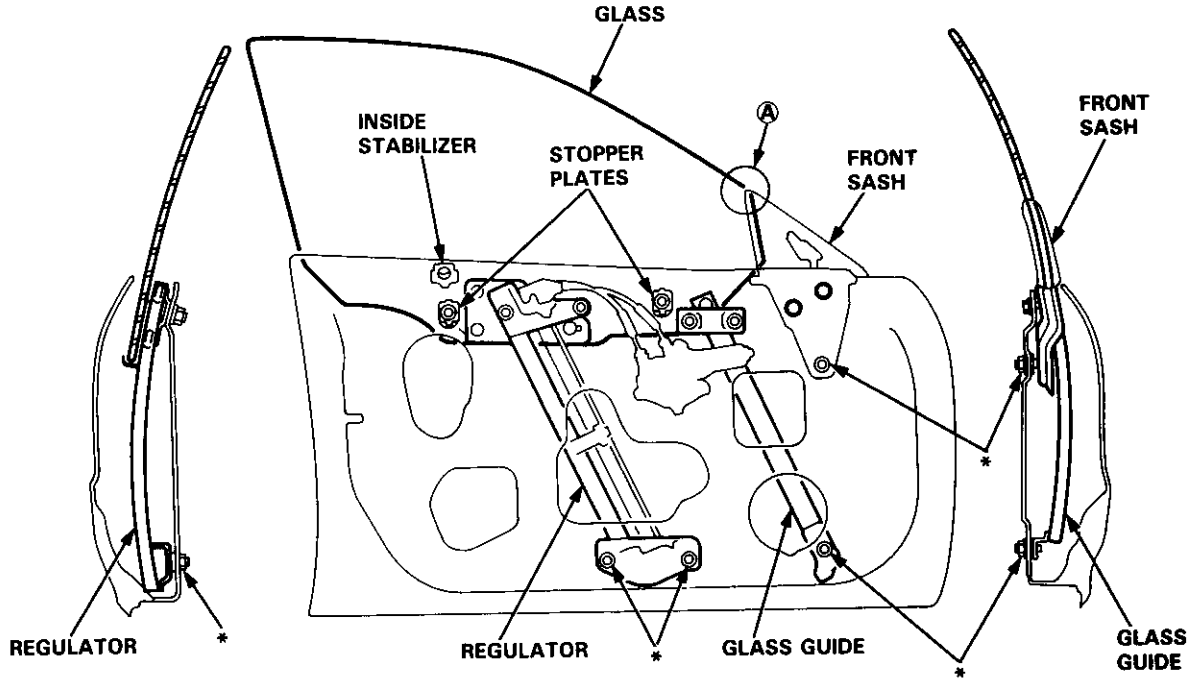

Rear:

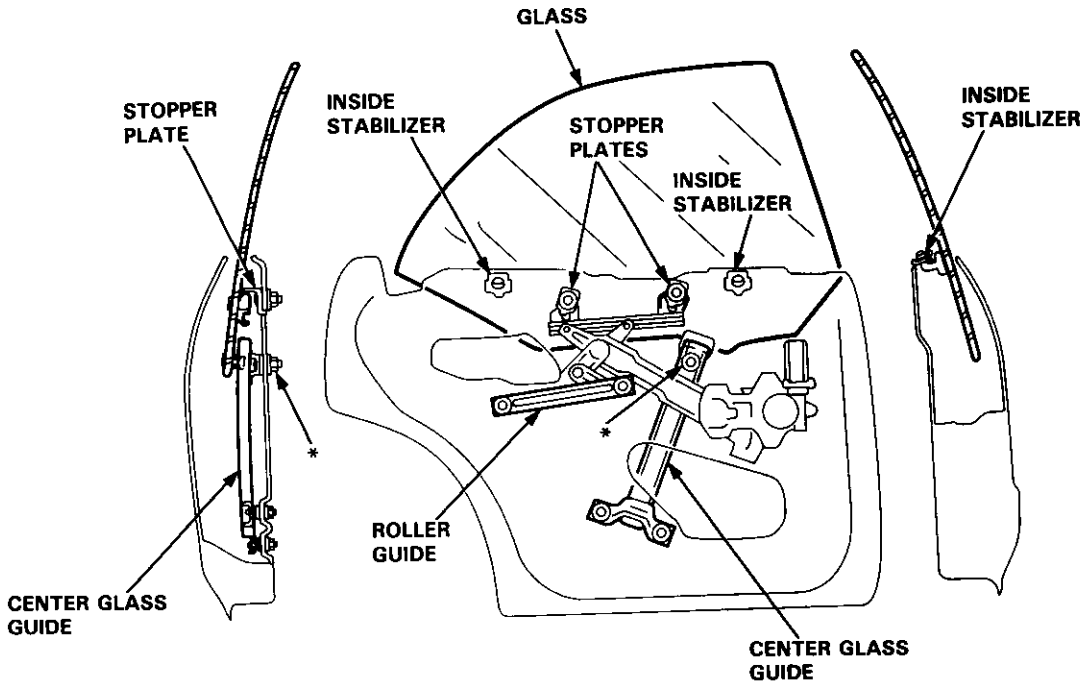

NOTE: Place the vehicle on a firm, level surface when adjusting the glass.

1. Remove the weatherstrip (see page 20-158).

   NOTE: Check the weatherstrip for damage and deterioration, and replace if necessary.

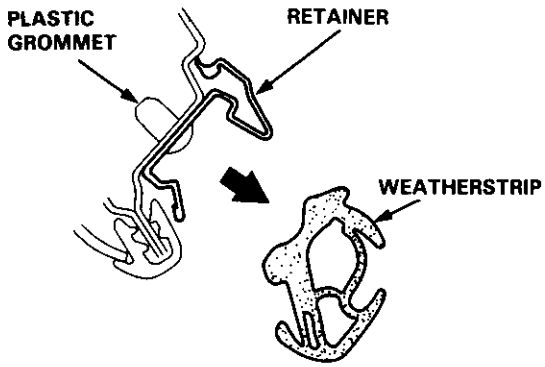

2. Install the center pillar molding.

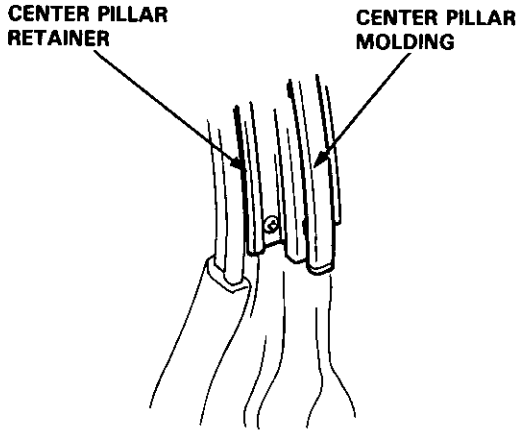

3. Remove the door panel (see pages 20-20, 32).

   NOTE: If necessary, peel off the plastic cover.

4. Remove the door mirror (see page 20-49).

5. Remove the power window switch from the front door panel.

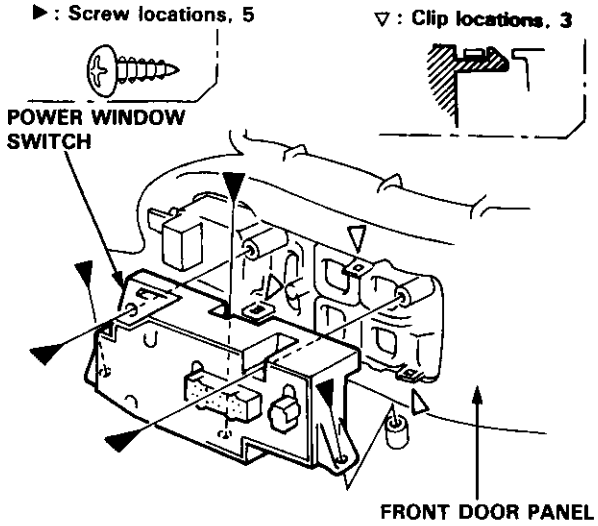

6. Connect the power window switch to the door harness connectors.

   Front:

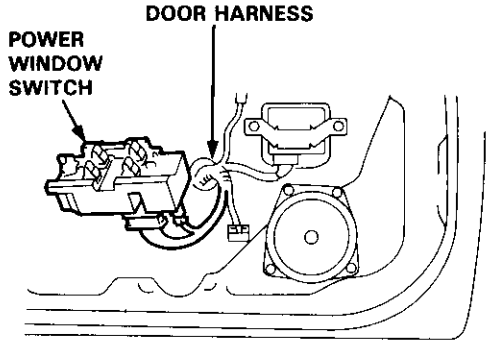

   Rear:

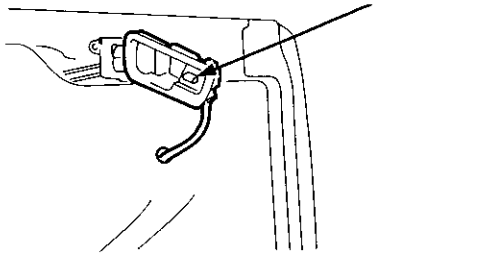

7. To prevent the glass from contacting the body, hold the glass, and close the door carefully.

8. Raise the glass fully.

   NOTE: Check the door fit to the body opening.

(cont'd)

Glass Adjustment (cont'd)

9. Measure and record clearances "H" and "B" at the locations shown.

10. Adjust the clearance as described in steps (11) thru (14).

Measuring Points

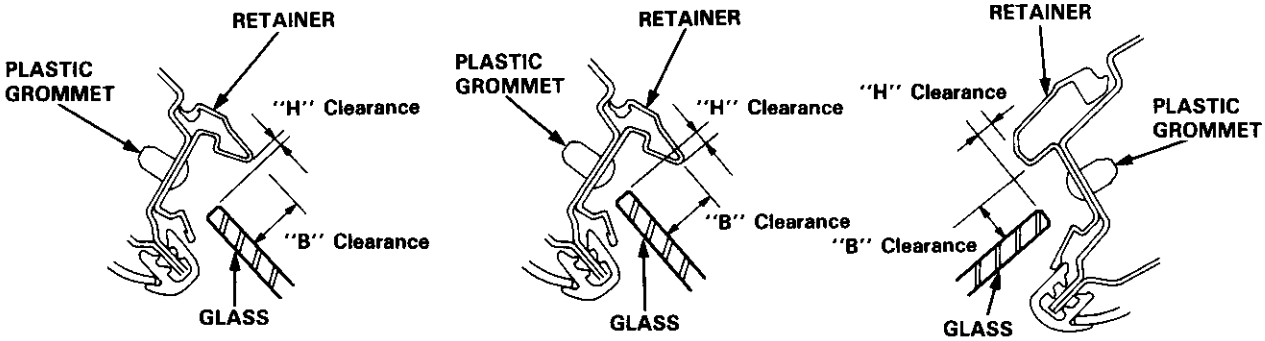

Section ① Section ②, ③ Section ④

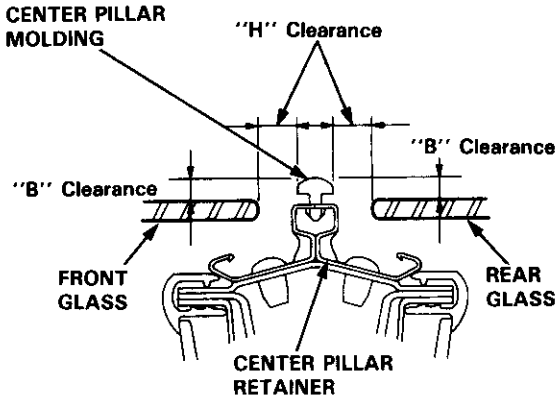

Section ⑤

(Standard Clearance)

- Permissible tolerance: ±0.1 mm (0.04 in)

Front: (11) and (12)

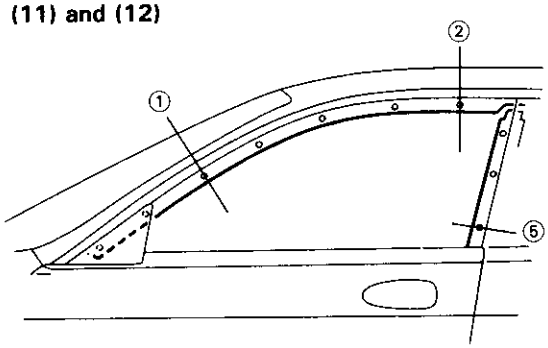

Rear: (13) and (14)

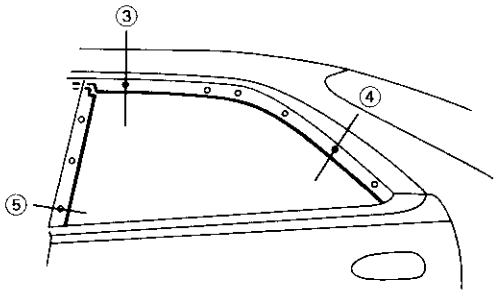

Unit: mm (in)

Measuring Point		①	②	⑤
Clearance	H	0.8 (0.03)	3.0 (0.12)	10.3 (0.41)
	B	9.3 (0.37)	9.9 (0.389)	5.6 (0.22)

Measuring Point		⑤	③	④
Clearance	H	10 (0.39)	2.5 (0.1)	6.0 (0.24)
	B	5.1 (0.2)	11.5 (0.45)	12.1 (0.48)

Front Door:

11. Adjust clearance "H" as follows.

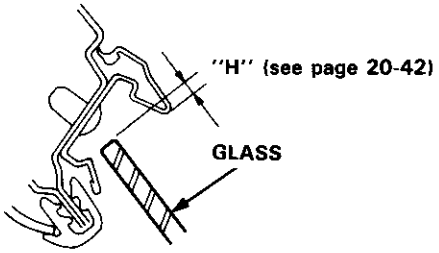

—1 Loosen the bolts and locknut securing the front sash, and move the front sash all the way forward.

NOTE: Hold the adjusting bolt with a hex wrench when loosening the locknut.

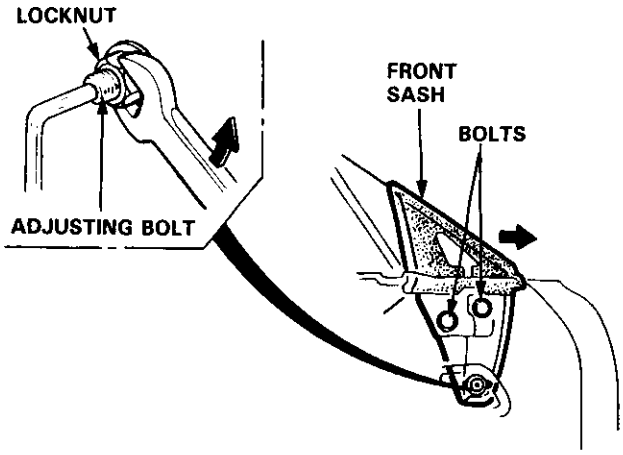

—2 Loosen the nut securing the stopper plates.

—3 Loosen the bolts securing the glass, and move the glass up or down to align it with the retainer as shown.

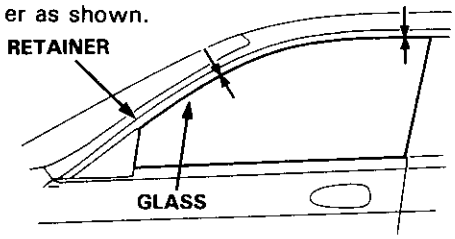

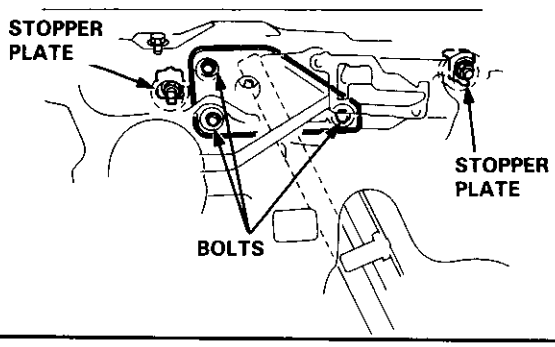

—4 Loosen the nuts and locknuts securing the glass guide, and regulator. Adjust the glass fore and aft by moving the glass guide and regulator.

NOTE: Hold the adjusting bolts with a hex wrench when loosening the locknuts.

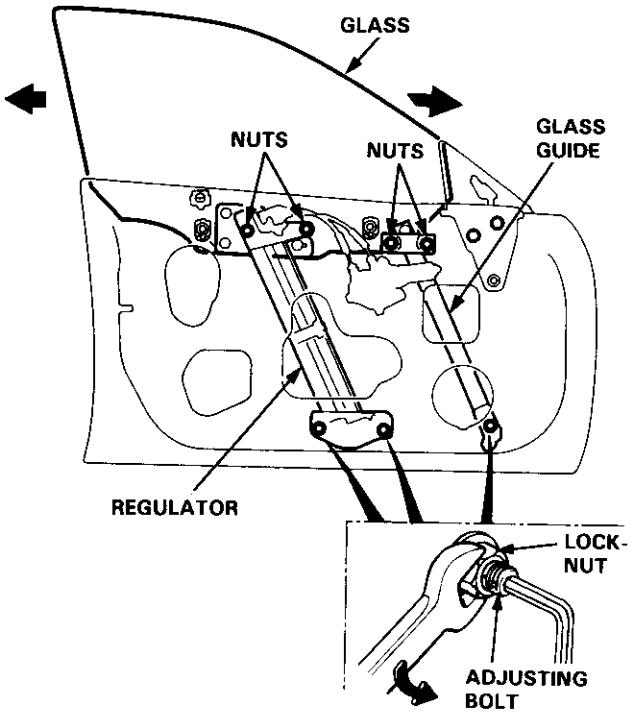

—5 Repeat steps —3 thru —4 until clearance "H" is within the specified limits, then fasten the glass guide and regulator.
Press the stopper plates against the glass stoppers, then fasten the stopper plates.

NOTE: Check that the stopper plates contact the glass stoppers evenly.

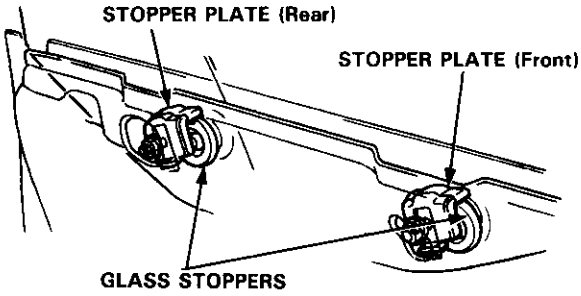

—6 Align the front sash with the glass, then fasten the front sash.

(cont'd)

Glass Adjustment (cont'd)

12. Adjust clearance "B" as follows.

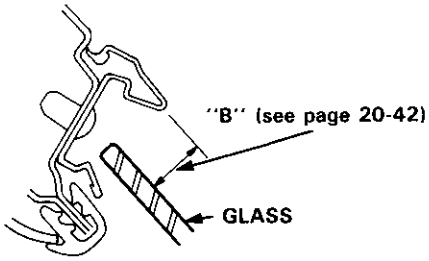

—1 Lower the glass 10 mm (0.39 in).

—2 Push the glass outward 10 mm (0.39 in), then push the inside stabilizers against the glass lightly. Fasten the inside stabilizers.

NOTE: Check that the glass moves smoothly.

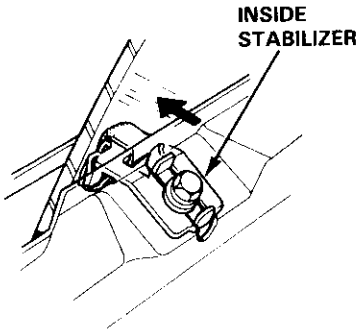

—3 Loosen the locknut, and turn the adjusting bolt until the clearance "B" is within the specified value.

Adjusting Bolt	Top Edge of Glass
Clockwise	➡ Moved out
Counter-clockwise	⇦ Moved in

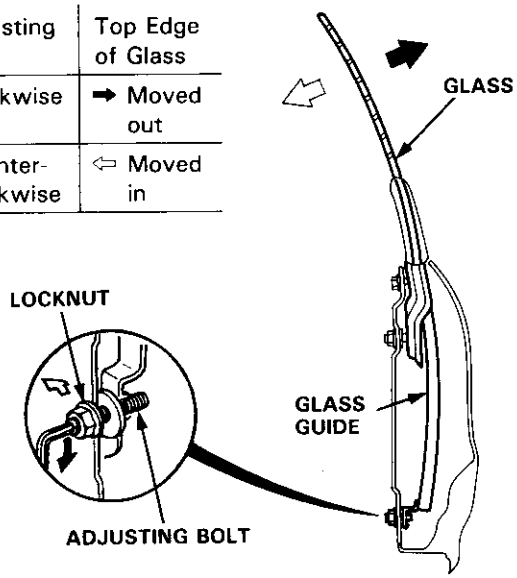

Adjusting Bolt	Top Edge of Glass
Clockwise	⬅ Moved out
Counter-clockwise	⇨ Moved in

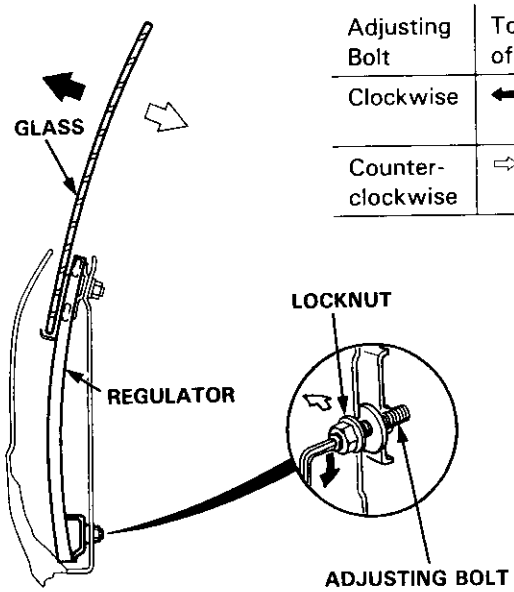

NOTE: Turn the front and rear adjusting bolts the same amount to keep the regulator parallel with the seating surface of the door.
After tightening the adjusting bolts, make sure that the ends of the adjusting bolts still project out of the locknuts.

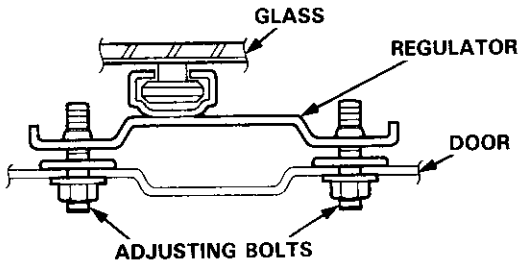

—4 Align the front sash with the glass using the adjusting bolt at the bottom of the front sash.

—5 Move the glass up and down to seat it, then measure clearance "B" at the designated locations.

—6 Measure clearance "H" again to make sure it is still within the specified limits at the designated locations.

NOTE: Repeat the above steps until the correct clearances are obtained.

Rear Door:

13. Adjust clearance "H" as follows.

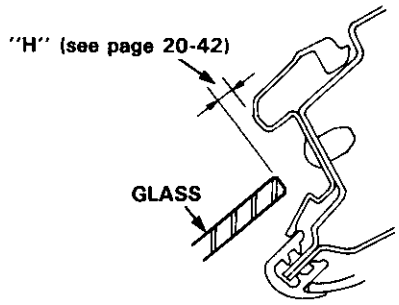

—1 Loosen the nut securing the stopper plates.

—2 Loosen the nut securing the roller guide, and move the guide up or down to align the glass with the body at the rear and center pillars.

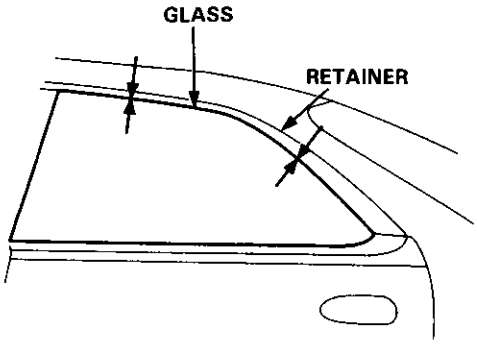

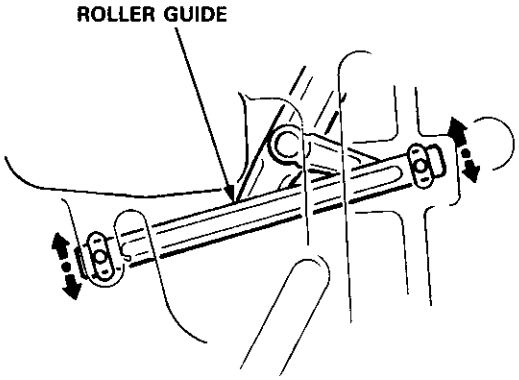

—3 Loosen the locknuts securing the center glass guide, and adjust the glass fore and aft by moving the center glass guide.

NOTE: Hold the adjusting bolts with a hex wrench or flat tip screwdriver when loosening the locknuts.

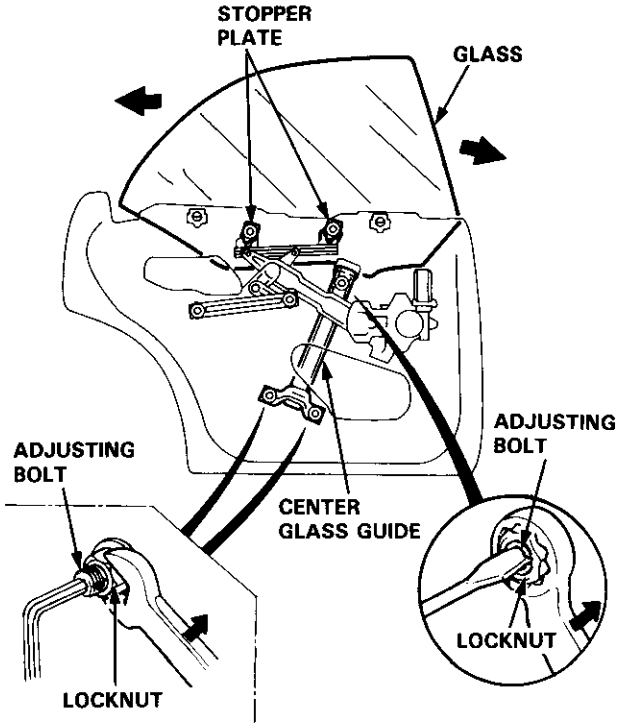

—4 Repeat steps—2 and —3 until clearance "H" is within the specified limits, then fasten the center glass guide and roller guide.
Press the stopper plates against the glass stoppers, then fasten the stopper plates.

NOTE: Check that the stopper plates contact the glass stoppers evenly.

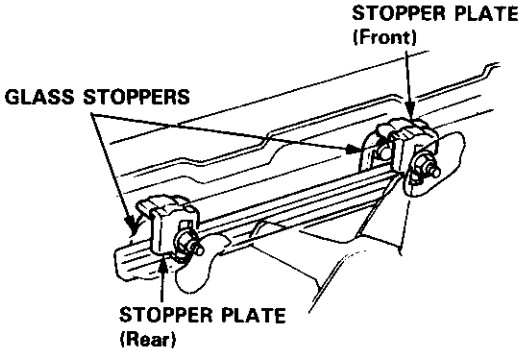

(cont'd)

Glass Adjustment (cont'd)

14. Adjust clearance "B" as follows.

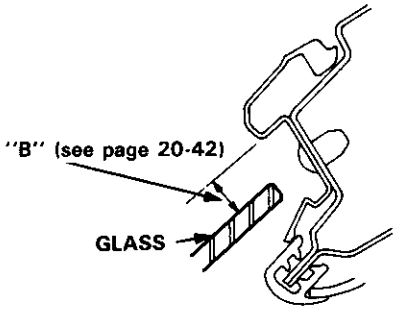

—1 Lower the glass 10 mm (0.39 in).

—2 Push the glass outward 10 mm (0.39 in), then push the inside stabilizers against the glass lightly. Fasten the inside stabilizers.

NOTE: Check that the glass moves smoothly.

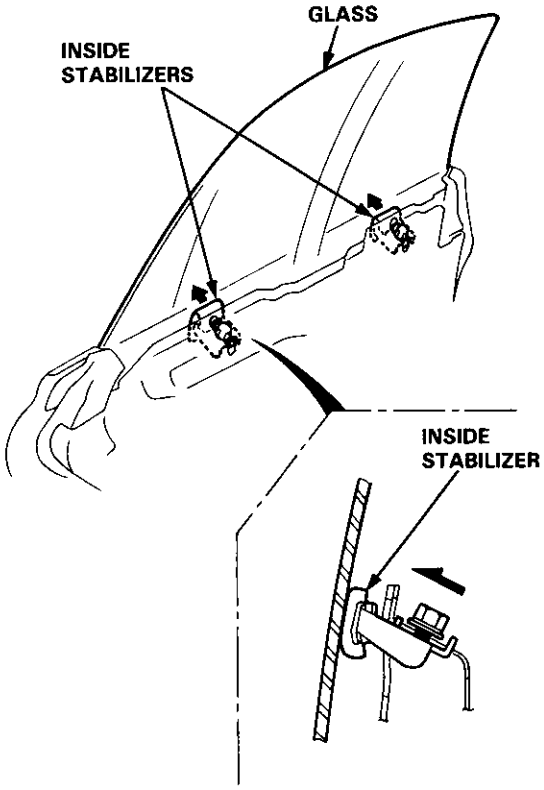

—3 Loosen the upper locknut on the center glass guide, and turn the adjusting bolt until clearance "B" is within the specified value.

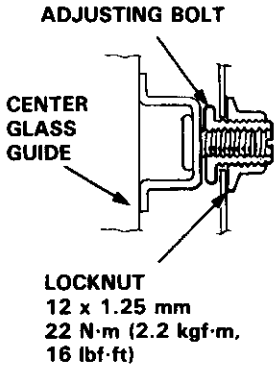

Adjusting Bolt	Top Edge of Glass
Clockwise	⬅ Moved out
Counter-clockwise	⇨ Moved in

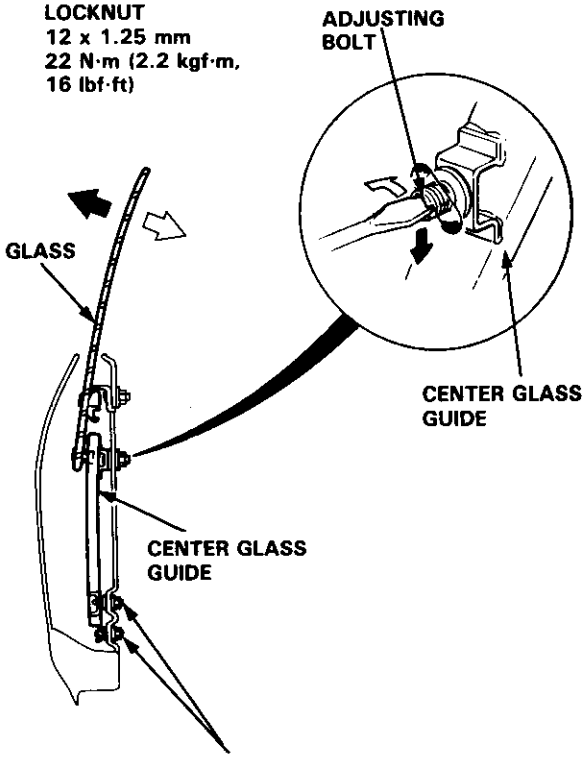

NOTE: Do not adjust the lower adjusting bolts on the center glass guide.

—4 Move the glass up and down to seat it, then measure clearance "B" at the designated locations.

—5 Measure clearance "H" again to make sure it is still within the specified limits at the designated locations.

NOTE: Repeat the above steps until the correct clearances are obtained.

15. After the clearances have been adjusted properly, reinstall the weatherstrip.

16. Check that the glass contacts the weatherstrip evenly.

    NOTE: Measuring points are described on page 20-42.

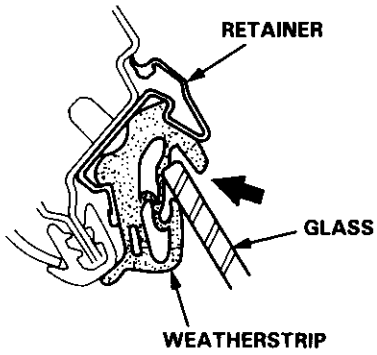

Center Pillar section:

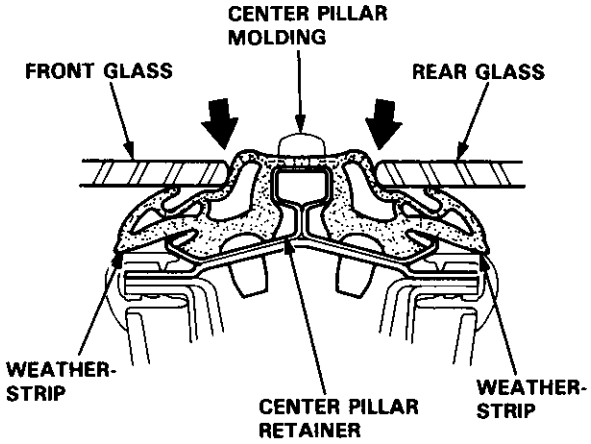

17. Check for water leaks.

    NOTE: Do not use high pressure water.

18. Route the door harness and connectors, and fasten them to the door (see pages 20-22, 33).

19. Disconnect the power window switch from the door harness, then install the power window switch on the door panel (see page 20-41).

20. Attach the plastic cover, then install the door panel (see pages 20-20, 32).

Position Adjustment

NOTE: Place the vehicle on a firm, level surface when adjusting the doors.

After installing the door, check for a flush fit with the body, then check for equal gaps between the front, rear, and bottom door edges and the body.
The door and body edges should also be parallel. Adjust at the hinges as shown.

CAUTION: Place a shop towel on the jack to prevent damage to the door when loosening the door and hinge mounting bolts for adjustment.

DOOR MOUNTING BOLTS
8 x 1.25 mm 29 N·m (3.0 kgf·m, 22lbf·ft)
Loosen the door mounting bolts slightly to move the door IN or OUT until it's flush with the body. If necessary, you can install a shim behind one hinge to make the door edges PARALLEL with the body.

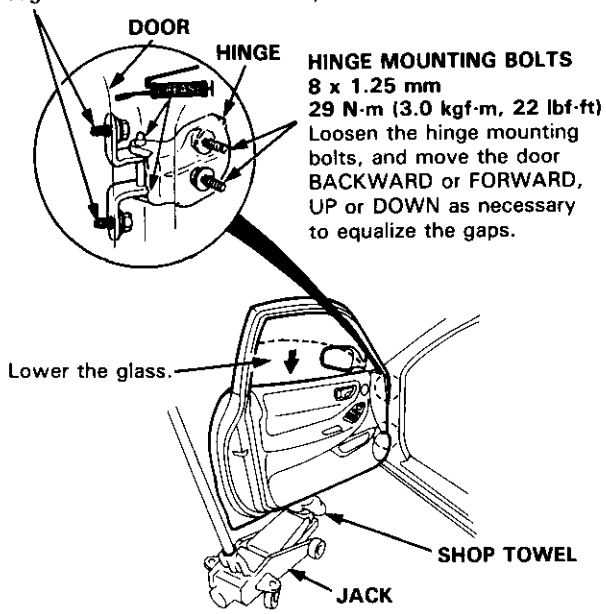

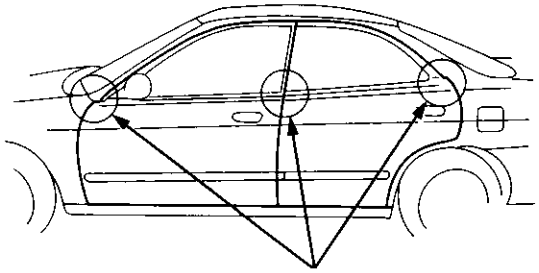

The door and body edges should be parallel.

NOTE: Check for water leaks.

Striker Adjustment

Make sure the door latches securely without slamming. If it needs adjustment:

1. Draw a line around the striker for reference.
2. Loosen the screws, and move the striker IN or OUT to make the latch fit tighter or looser. Move the striker UP or DOWN to align it with the latch opening. Then lightly tighten the screws and recheck.

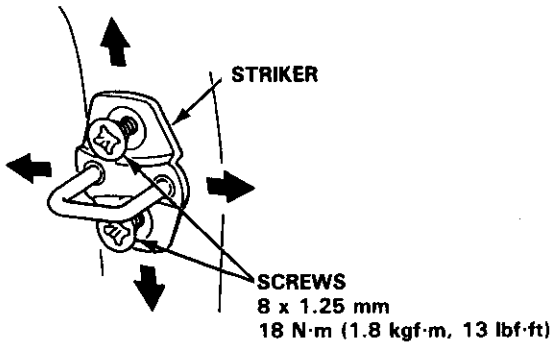

NOTE: Hold the outer handle out, and push the door against the body to be sure the striker allows a flush fit.

3. If the door latches properly, tighten the screws and recheck.

Power Door Mirror Replacement

Hatchback

1. Pry out the cover panel with a flat tip screwdriver, then remove it.

   CAUTION: When prying with a flat tip screwdriver, wrap it with protective tape to prevent damage.

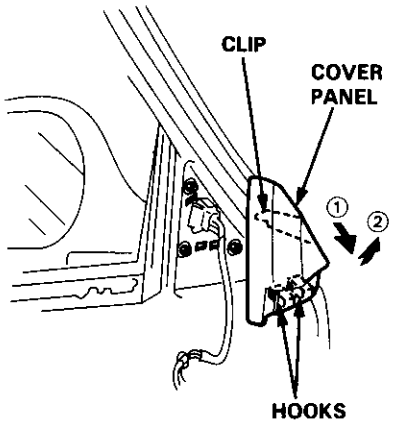

2. Disconnect the connector. Remove the nuts, then remove the door mirror while holding it.

◀ : Nut locations, 3

5 x 0.8 mm
4 N·m (0.4 kgf·m, 3 lbf·ft)

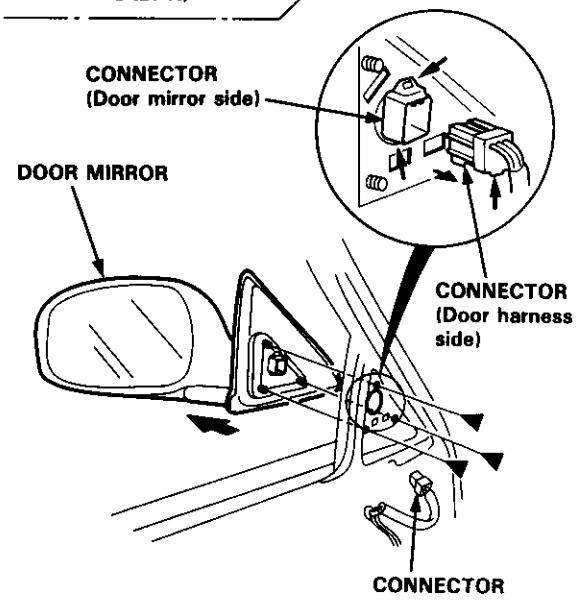

3. Installation is the reverse of the removal procedure.

Sedan

1. Remove the door panel (see page 20-20) and disconnect the connector.

2. Pry the cover panel out with a flat tip screwdriver, then remove the cover panel.

   CAUTION: When prying with a flat tip screwdriver, wrap it with protective tape to prevent damage.

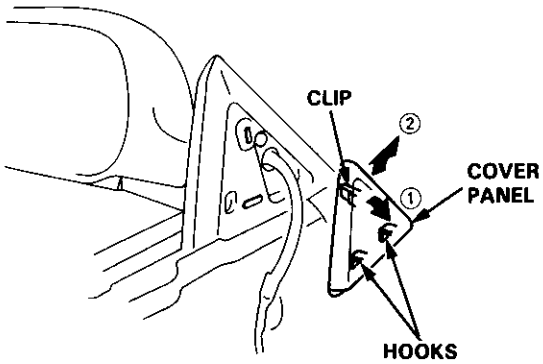

3. Remove the screws while holding the door mirror.

◀ : Screw locations

A◀ : Screw, 2
5 x 0.8 mm
4 N·m (0.4 kgf·m, 3 lbf·ft)

B◀ : Screw, 1
5 x 0.8 mm
4 N·m (0.4 kgf·m, 3 lbf·ft)

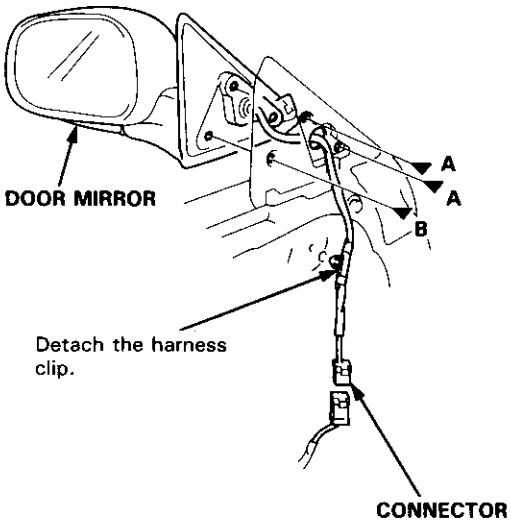

4. Installation is the reverse of the removal procedure.

Mirror Holder Replacement

1. Carefully pry out the mirror holder with a flat tip screwdriver as shown.

   CAUTION: To prevent damage to the mirror, wrap the end of a flat tip screwdriver with a shop towel.

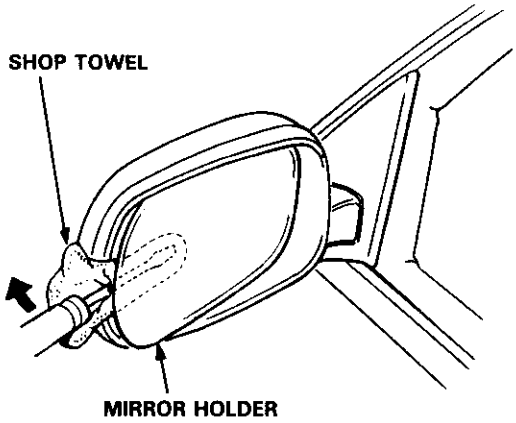

2. Installation is the reverse of the removal procedure.

   NOTE: Apply grease to the locations indicated by the arrows.

Hatchback

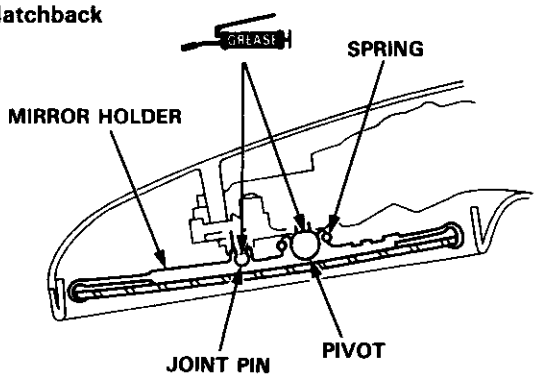

Sedan

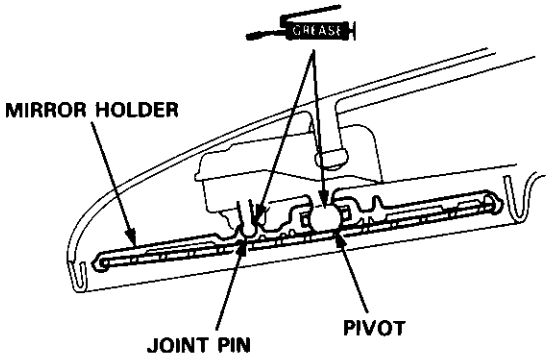

Mirror Visor and Mirror Cover Replacement

Hatchback

1. Remove the mirror holder.
2. Turn the actuator forward, then remove the screws.

◀ : **Screw locations, 4**

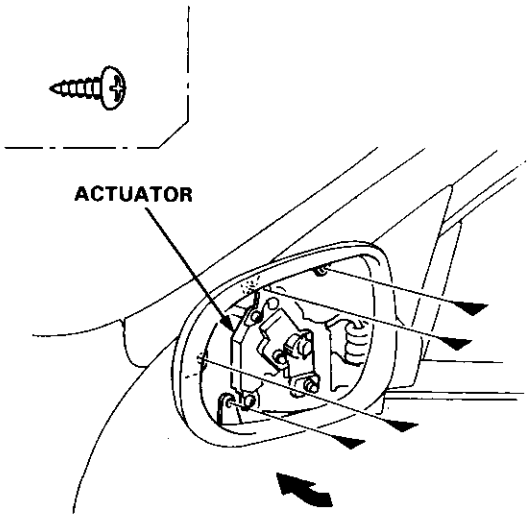

3. Detach the hooks, then remove the mirror visor.

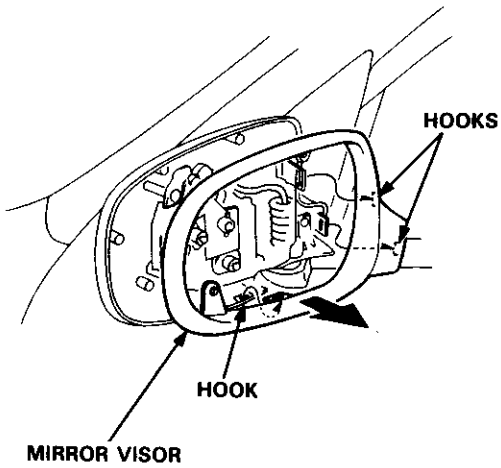

4. Turn the actuator to the original position. Remove the screws, then remove the mirror cover.

◀ : Screw locations, 3

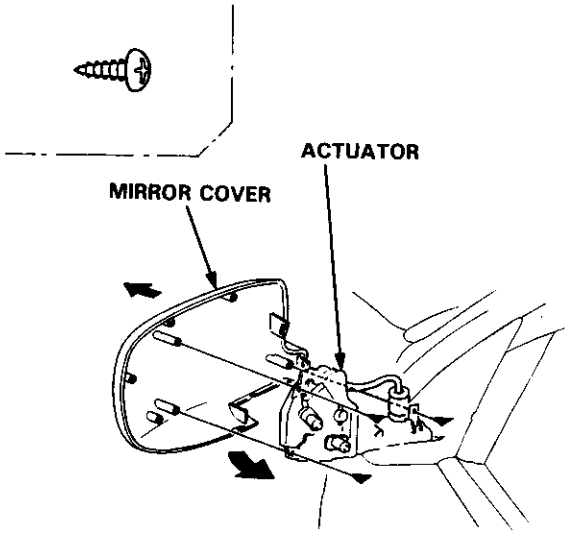

5. Installation is the reverse of the removal procedure.

Sedan

1. Remove the mirror holder.

2. Turn the mirror base forward, then remove the screws.

◀ : Screw locations

A ◀ : Screw, 4

B ◀ : Screw, 1

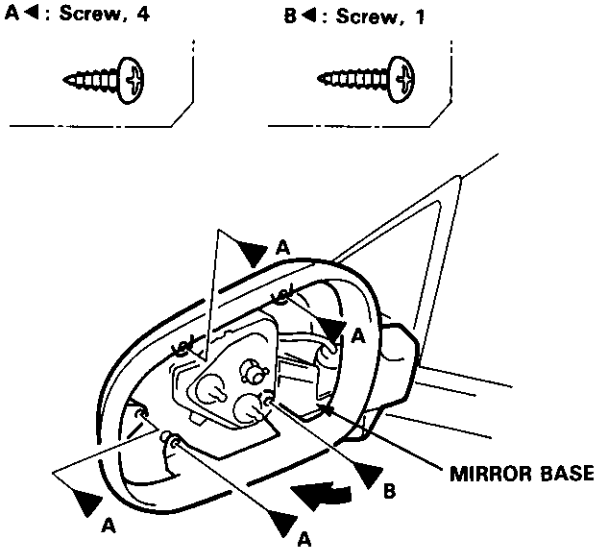

3. Detach the hook, then remove the mirror visor.

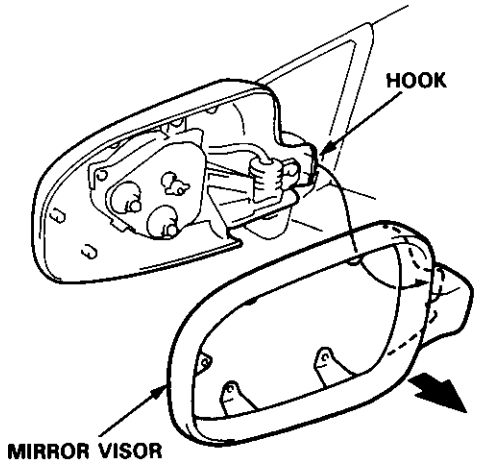

(cont'd)

Mirror Visor and Mirror Cover Replacement (cont'd)

4. Remove the actuator, then remove the screws.

◀: Screw locations

A◀: Screw, 3 B◀: Screw, 2 C◀: Screw, 1

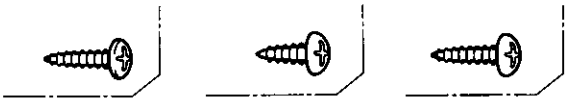

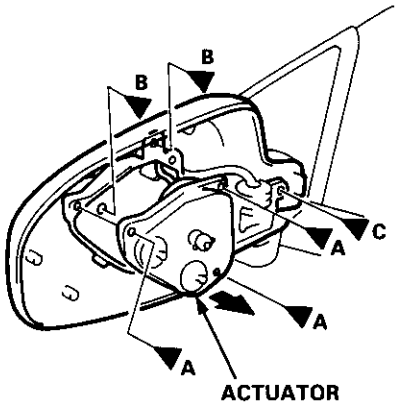

5. Turn the mirror base as shown, then remove the mirror cover

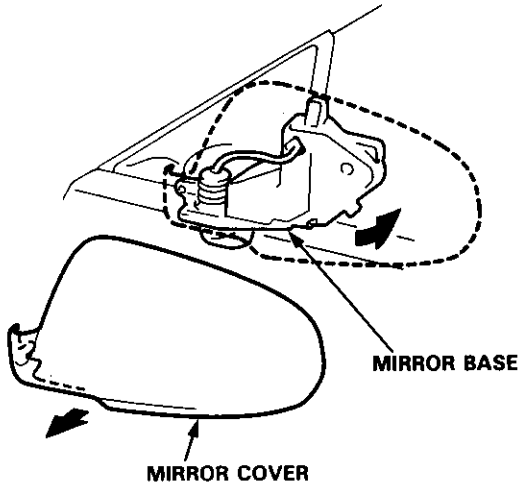

6. Installation is the reverse of the removal procedure.

Rearview Mirror Replacement

1. Pry the cover off using the end of a flat tip screwdriver.

   CAUTION: To prevent damage to the mirror and cover, wrap the end of the screwdriver with a shop towel.

2. Remove the screws, then remove the rearview mirror.

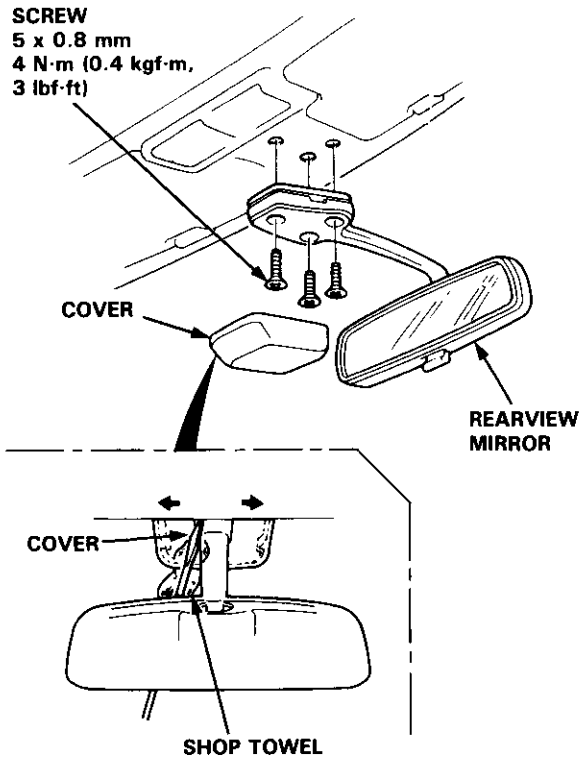

3. Installation is the reverse of the removal procedure.

Index

NOTE: The numbers after the part names show the quantities of the parts used.

Hatchback

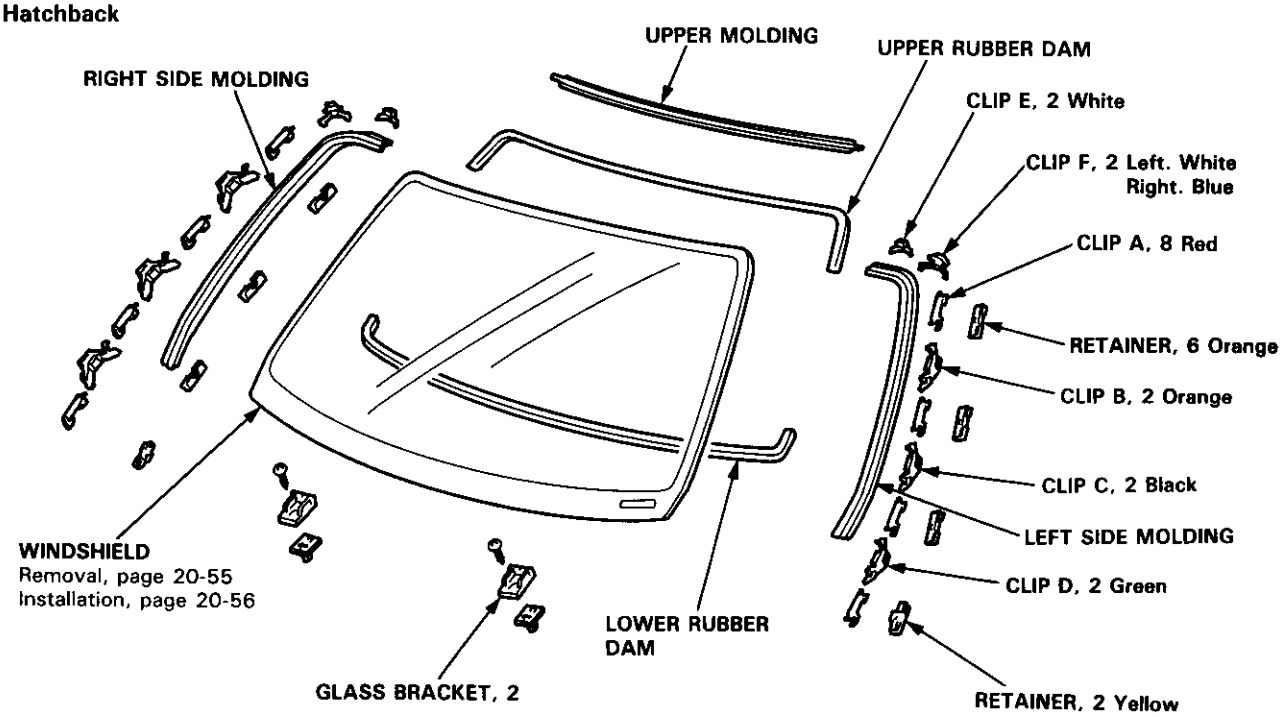

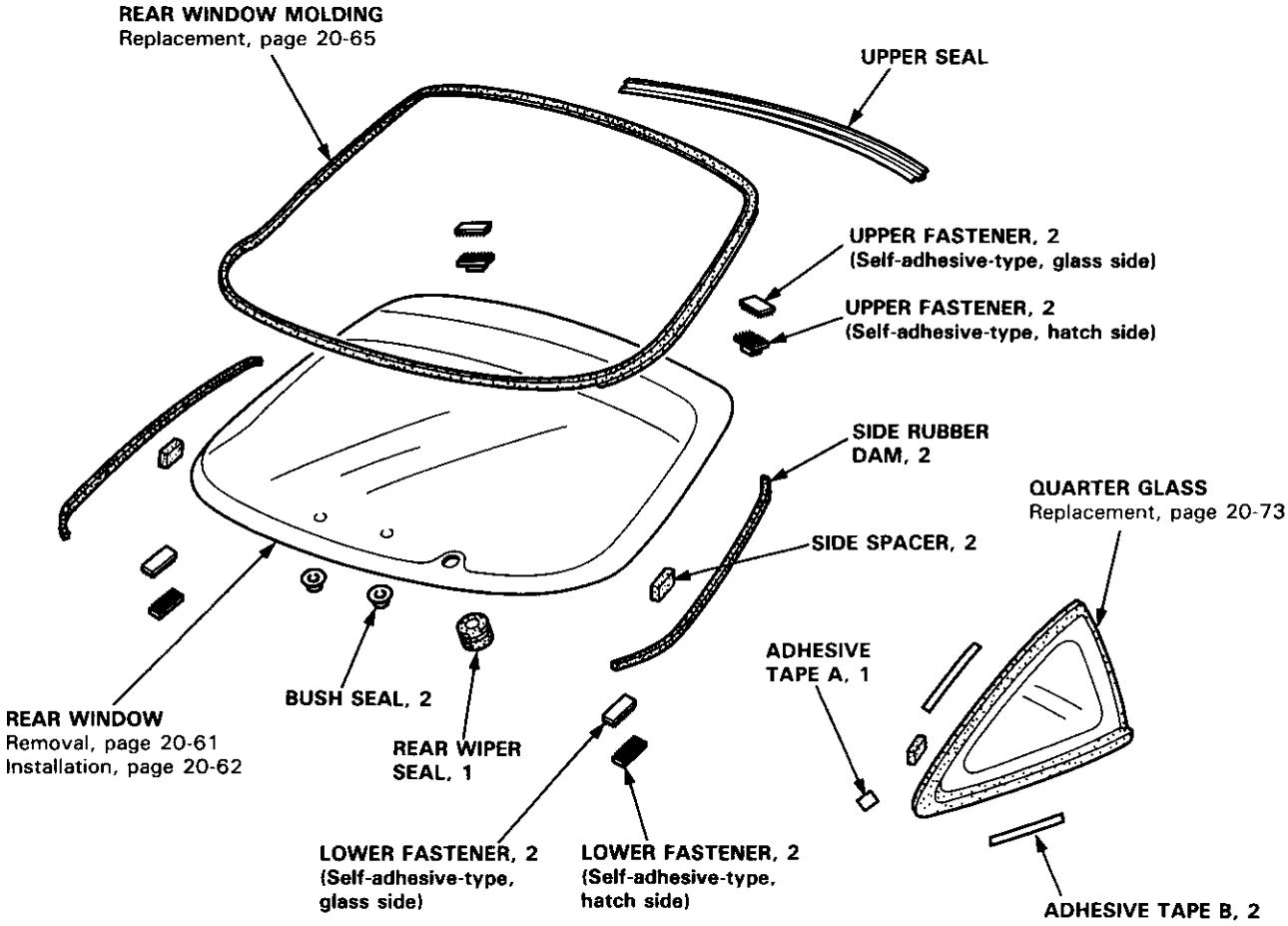

Windshield, Rear Window

Index

NOTE: The numbers after the part names show the quantities of the parts used.

Sedan

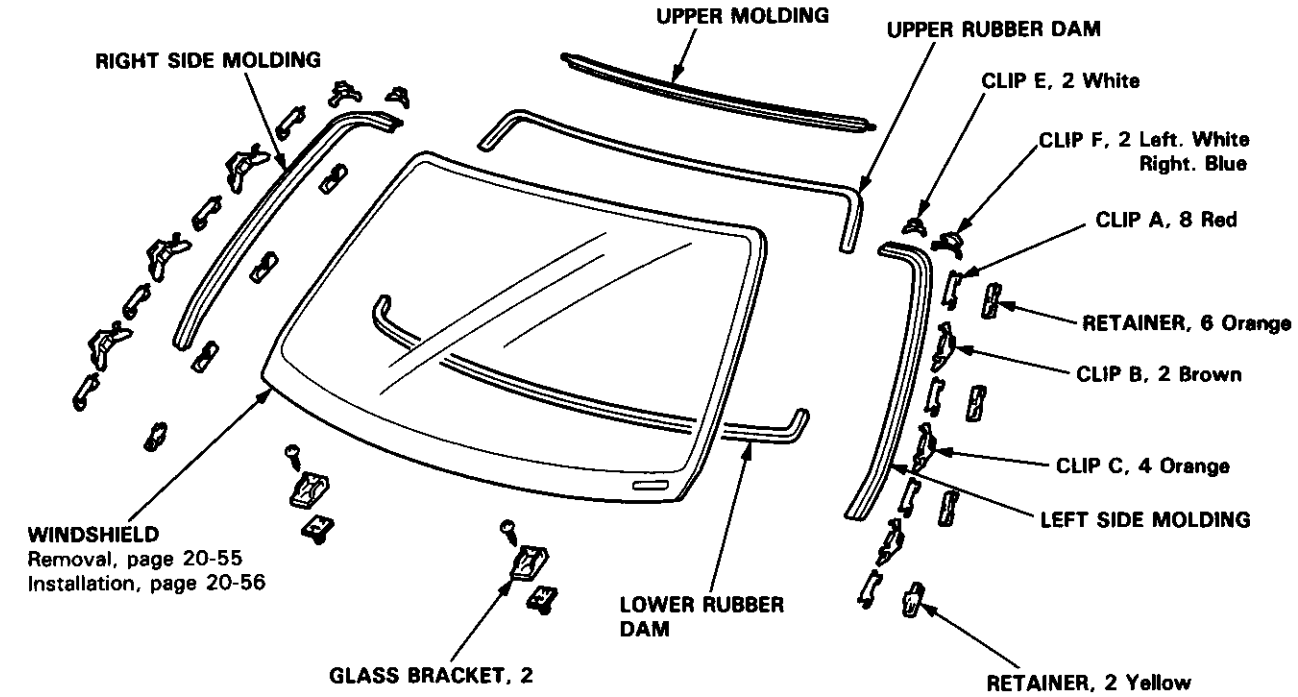

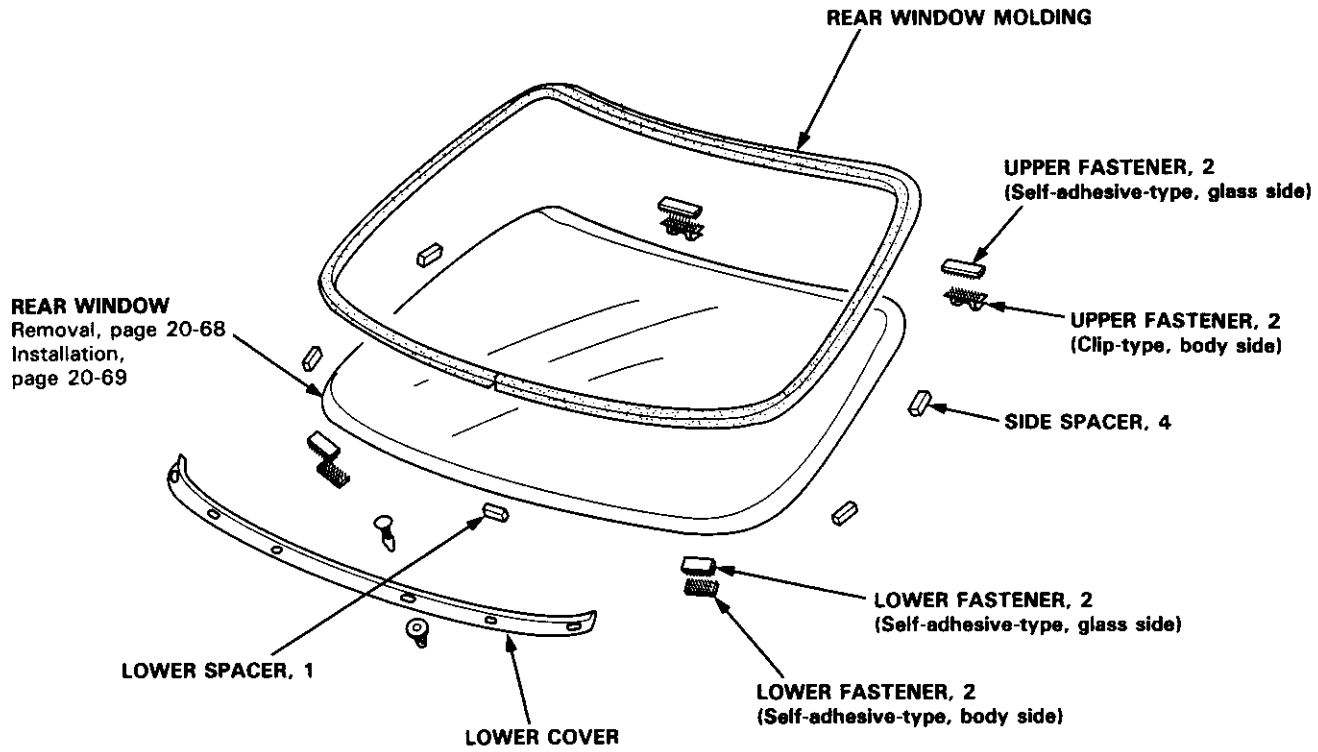

Removal

CAUTION:
- **Wear gloves to remove and install the windshield.**
- **Use seat covers to avoid damaging any surfaces.**

1. To remove the windshield, first remove the:
   - Front pillar trim (see page 20-91)
   - Headliner (see pages 20-98, 100)
   - Front wipers and air scoop (see section 23)

2. Detach the clips from the retainers, then remove both side moldings as shown.

   NOTE: If necessary, replace any damaged clips.

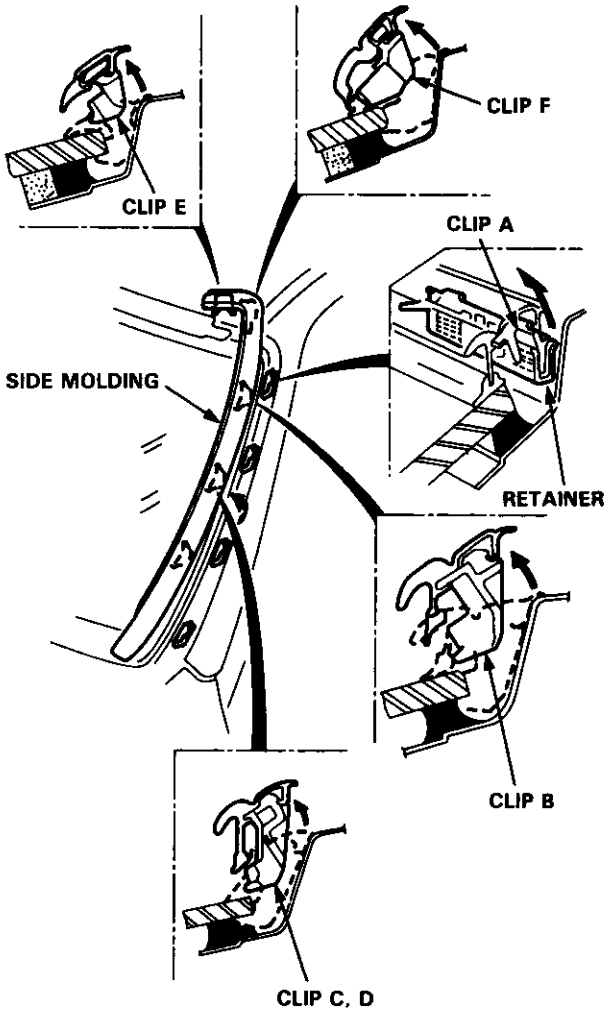

3. Remove the right and left glass brackets.

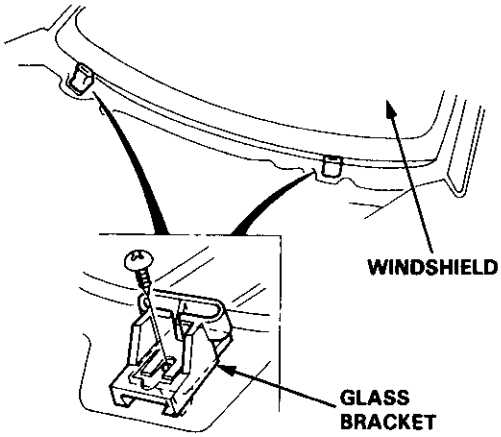

4. Peel off the upper molding.

   NOTE: When the upper molding removal is difficult, cut the upper rubber portion ① off, then cut the side rubber portion ②.

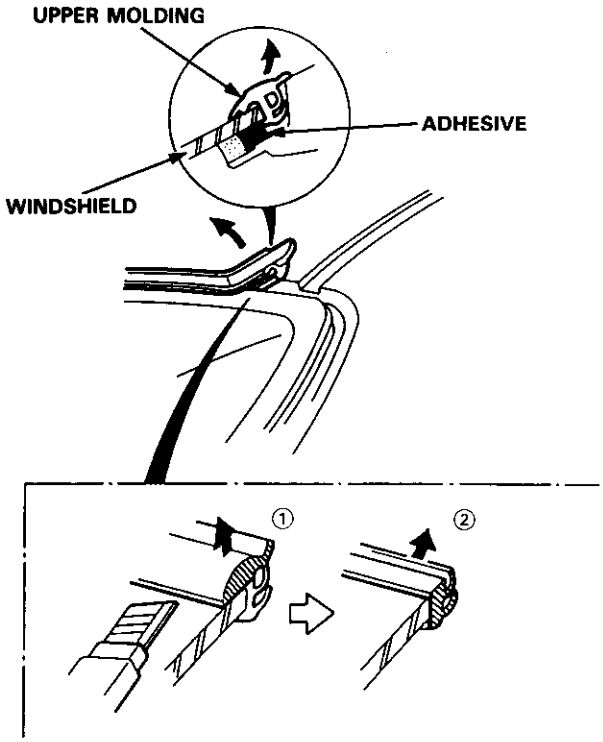

5. Remove the other retainers from the body.

(cont'd)

Removal (cont'd)

6. Apply protective tape to along the edge of the dashboard and body as shown.
   Using an awl, make a hole through the rubber dam and adhesive from inside the car. Push the piano wire throught the hole, and wrap each end around a piece of wood.

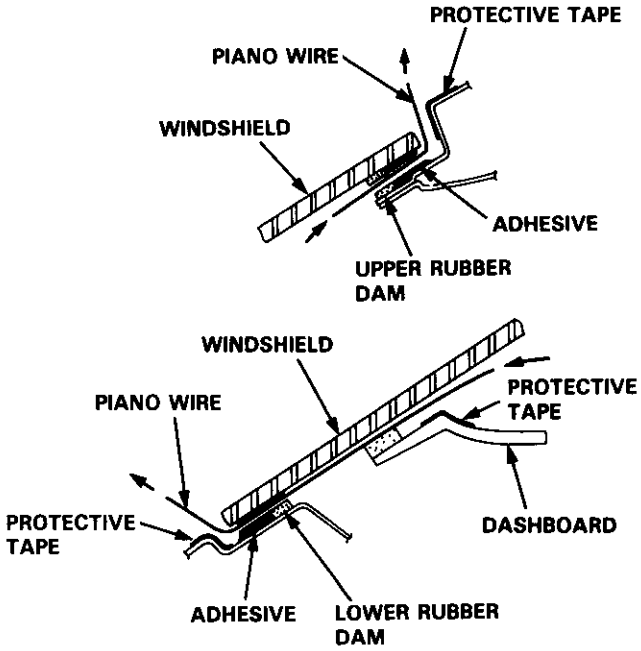

7. With a helper on the outside, pull the piano wire back and forth in a sawing motion, and carefully cut through the rubber dam and adhesive around the entire windshield.

   CAUTION: Hold the piano wire as close to the windshield as possible to prevent damage to the body and dashboard.

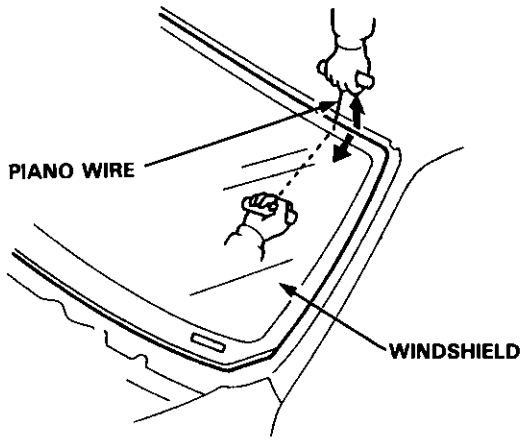

8. Carefully remove the windshield.

Installation

1. Scrape the old adhesive smooth with a knife, to a thickness of about 2 mm (0.08 in) on the bonding surface around the entire windshield opening flange.

   NOTE:
   - Do not scrape down to the painted surface of the body; damaged paint will interfere with proper bonding.
   - Remove the rubber dam from the body.
   - Mask off surrounding surfaces before painting.

2. Clean the body bonding surface with a sponge dampened in alcohol.

   NOTE: After cleaning, keep oil, grease and water from getting on the surface.

3. If the old windshield is to be reinstalled, use a putty knife to scrape off all traces of old adhesive, then clean the windshield surface with alcohol where new adhesive is to be applied.

   NOTE: Make sure the bonding surface is kept free of water, oil and grease.

   CAUTION: Avoid setting the windshield on its edges; small chips may later develop into cracks.

   NOTE:
   - Clean the shadowed area.
   - Clean the area Ⓐ as shown.

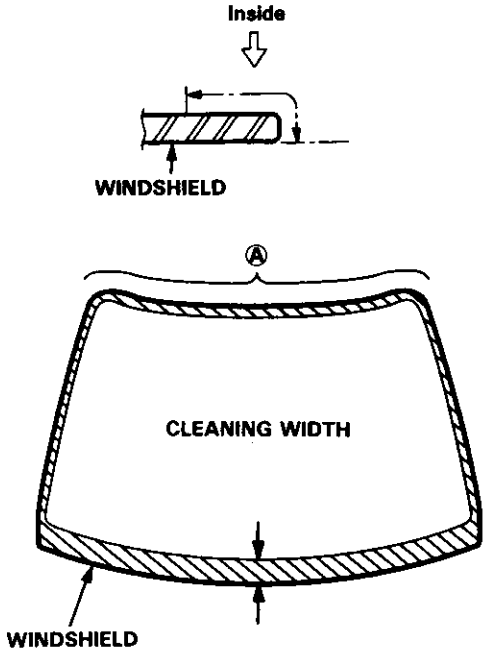

4. Center and glue the upper molding to the upper edge of the windshield.

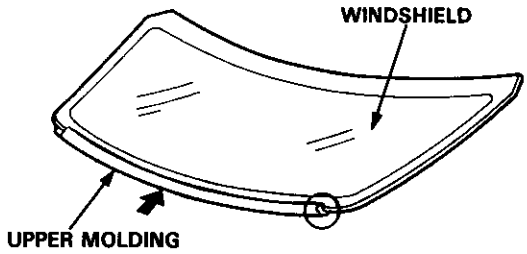

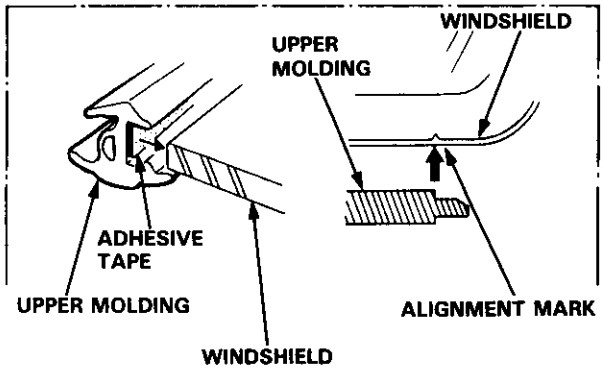

5. Glue the upper and lower rubber dams to the inside face of the windshield, as shown, to contain the adhesive during installation.

NOTE: Be careful not to touch the windshield where adhesive will be applied.

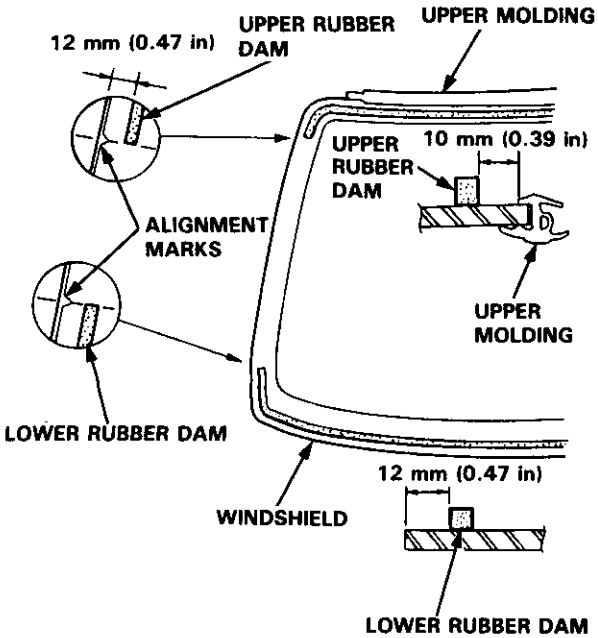

6. Install the glass brackets and retainers as shown.

NOTE: The numbers after the part names show the quantities of the parts used.

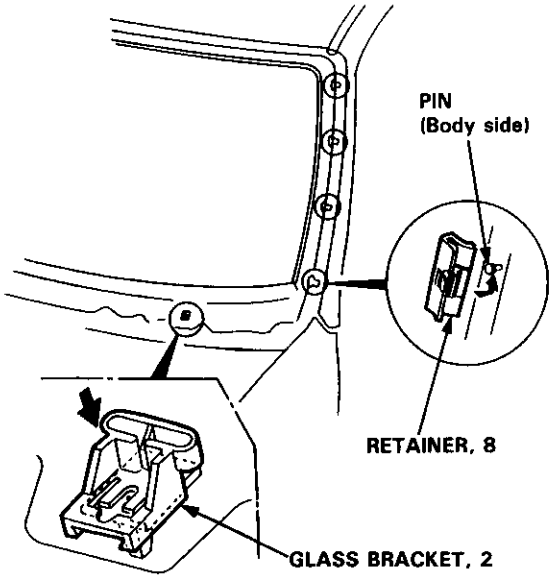

7. Set the windshield on the glass brackets, then center it in the opening. Make alignment marks across the windshield and body with a grease pencil at the four points shown.

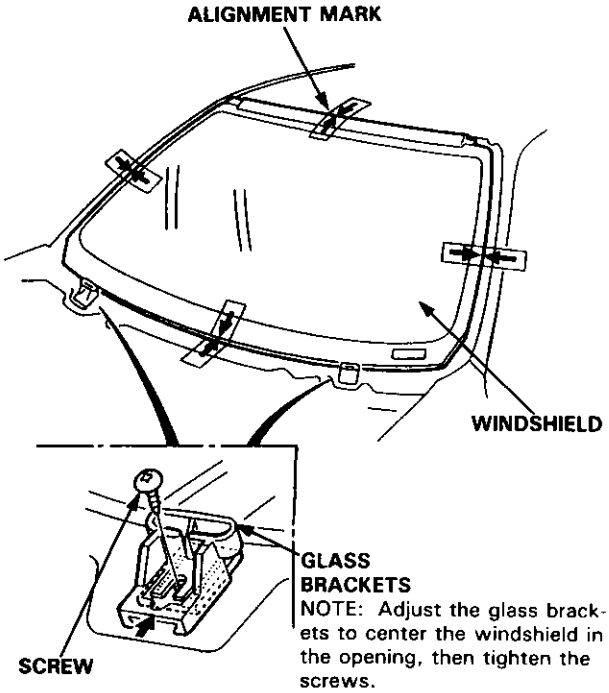

NOTE: Adjust the glass brackets to center the windshield in the opening, then tighten the screws.

8. Remove the windshield.

(cont'd)

Installation (cont'd)

9. With a sponge, apply a light coat of glass primer around the edge of the windshield as shown, then lightly wipe it off with gauze or cheesecloth.

   NOTE:
   - Do not apply body primer to the windshield, and do not get body and glass primer sponges mixed up.
   - Never touch the primed surfaces with your hands. If you do, the adhesive may not bond to the windshield properly, causing a leak after the windshield is installed.
   - Keep water, dust, and abrasive materials away from the primed surface.

   ////, : Apply glass primer here.

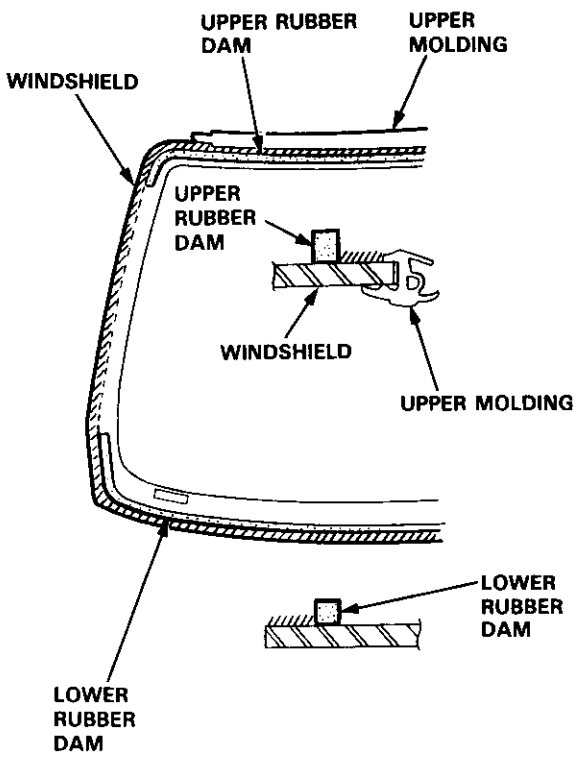

10. With a sponge, apply a light coat of body primer to the original adhesive remaining around the windshield opening flange. Let the body primer dry for at least 10 minutes.

    NOTE:
    - Do not apply glass primer to the body, and be careful not to mix up glass and body primer sponges.
    - Never touch the primed surfaces with your hands.
    - Mask off the dashboard before painting the flange.

    ////, : Apply body primer here.

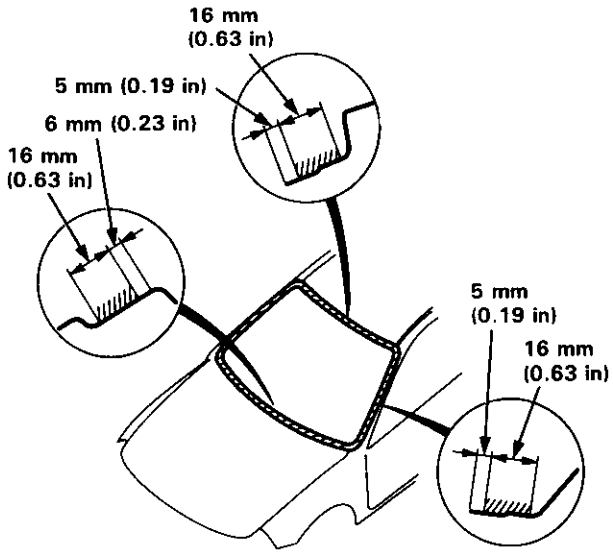

11. Thoroughly mix the adhesive and hardener together on a glass or metal plate with a putty knife.

    NOTE:
    - Clean the plate with a sponge and alcohol before mixing.
    - Follow the instructions that come with the adhesive.

12. Before filling a cartridge, cut the end of the nozzle, as shown.

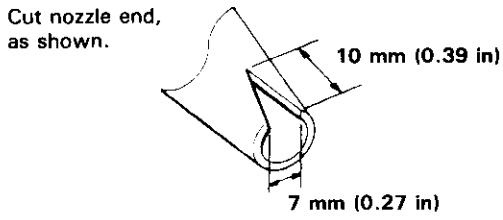

13. Pack adhesive into the cartridge without air pockets to ensure continuous delivery. Put the cartridge in a caulking gun, and run a bead of adhesive around the edge of the windshield as shown.

NOTE: Apply the adhesive within 30 minutes after applying the glass primer.

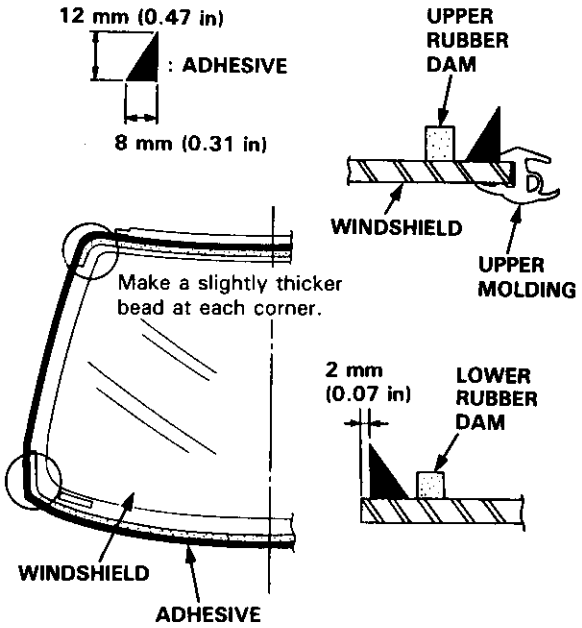

14. Use suction cups to hold the windshield over the opening, align it with the alignment marks made in step 7, and set it down on the adhesive. Lightly push on the windshield until its edge is fully seated on the adhesive all the way around.

NOTE: Do not close or open the doors until adhesive is dry.

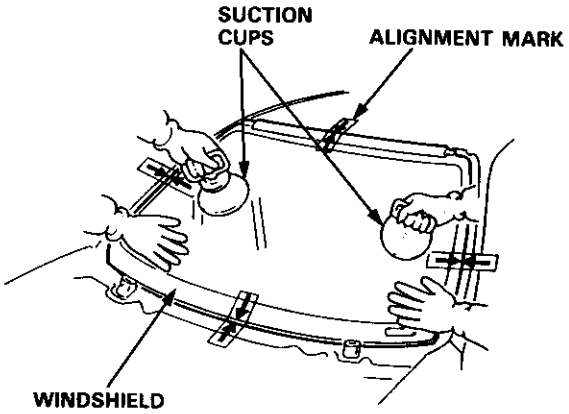

15. Install the clips on both side moldings.

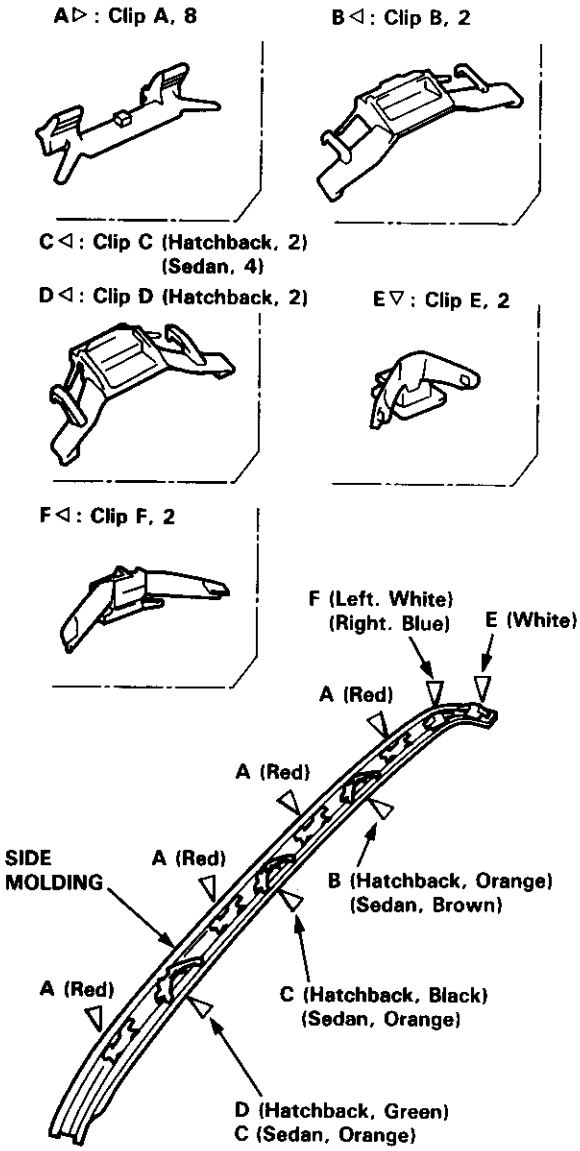

16. Scrape or wipe the excess adhesive off with a putty knife or towel.

NOTE: To remove adhesive from a painted surface or the windshield, wipe with a soft shop towel dampened with alcohol.

(cont'd)

Installation (cont'd)

17. Install both side moldings.

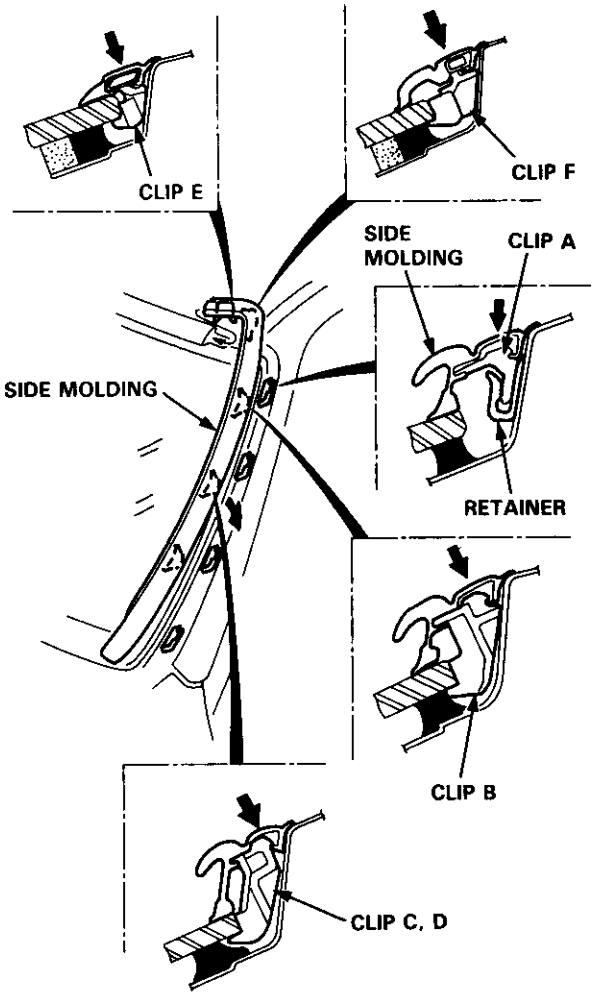

18. Let the adhesive dry for at least one hour, then spray water over the windshield and check for leaks. Mark leaking areas, and let the windshield dry, then seal with sealant.

    NOTE:
    - Let the car stand for at least four hours after windshield installation. If the car has to be used within the first four hours, it must be driven slowly.
    - Keep the windshield dry for the first hour after installation.
    - Check that the ends of the side molding are set under the air scoop.

19. Reassemble all removed parts.

Rear Window

Removal

Hatchback

CAUTION:

- **Use covers to avoid damaging the interior.**
- **Wear gloves to remove and install the glass.**
- **Do not damage the defroster grid lines.**
- **Take care not scratch the rear window molding.**

1. To remove the rear window, first remove the:
   - Rear shelf (see page 20-91)
   - Hatch side trim and hatch trim panel (see page 20-146)
   - High mount brake light (see section 23)
   - Rear wiper and wiper motor (see section 23)

2. Remove the rear window trim and disconnect the connectors.

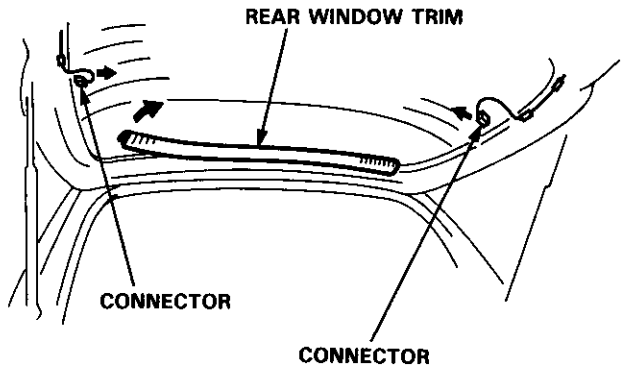

3. Apply protective tape to the inner and outer edges of the hatch.
   Using an awl, make a hole through the adhesive from the inside, at the top of the hatch. Push piano wire through the hole, and wrap each end around a piece of wood.

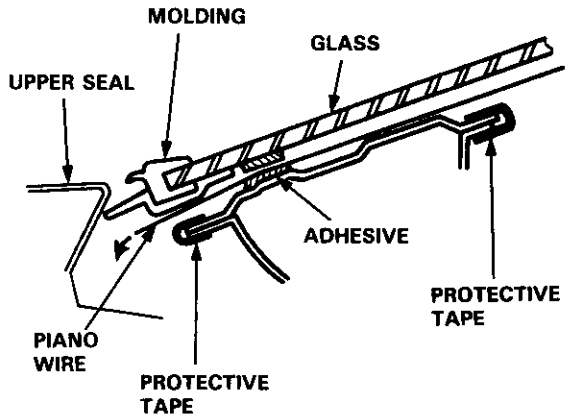

4. With a helper on the outside, pull the piano wire back and forth in a sawing motion, and carefully cut through the adhesive the along the top and the sides of the rear window.

   CAUTION: Hold the piano wire as close to the rear window as possible to prevent damage to the body and molding.

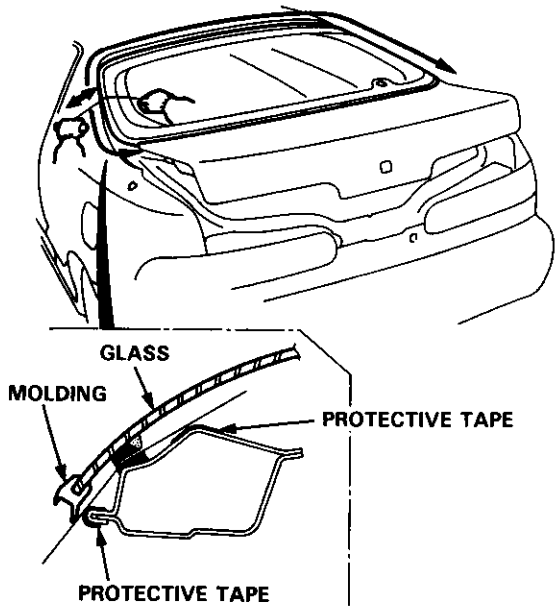

5. Cut the adhesive with a knife at the bottom of the rear window.

   NOTE: Do not use piano wire in this area.

6. Carefully remove the rear window.

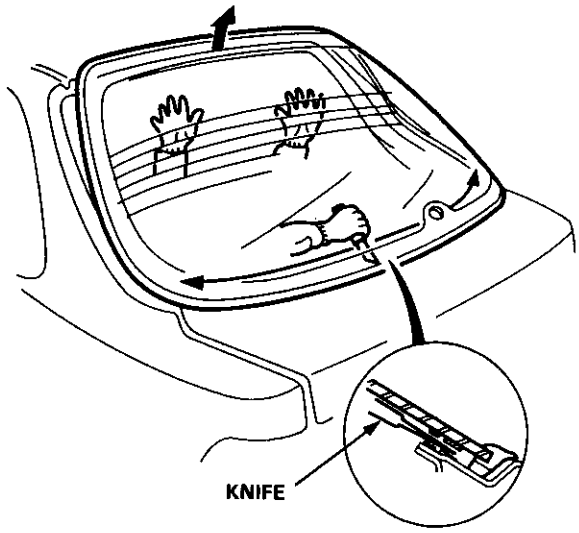

NOTE: Replace the fasteners with new ones whenever the rear window has been removed.

Installation

1. Scrape the old adhesive smooth with a knife to a thickness of about 2 mm (0.08 in) on the bonding surface around the entire rear window opening flange.

   NOTE:
   - Do not scrape down to the painted surface of the body; damaged paint will interfere with proper bonding.
   - Remove the upper and lower fasteners from the hatch.
   - Mask off surrounding surfaces before applying primer.

2. Clean the hatch bonding surface with a sponge dampened in alcohol.

   NOTE: After cleaning, keep oil, grease or water from getting on the surface.

3. If the old rear window is to be reinstalled, use a putty knife to scrape off all traces of old adhesive, then clean the rear window surface with alcohol where new adhesive is to be applied.

   NOTE: Make sure the bonding surface is kept free of water, oil and grease.

   CAUTION: Avoid setting the rear window on its edges; small chips may later develop into cracks.

   NOTE: Clean the shadowed area.

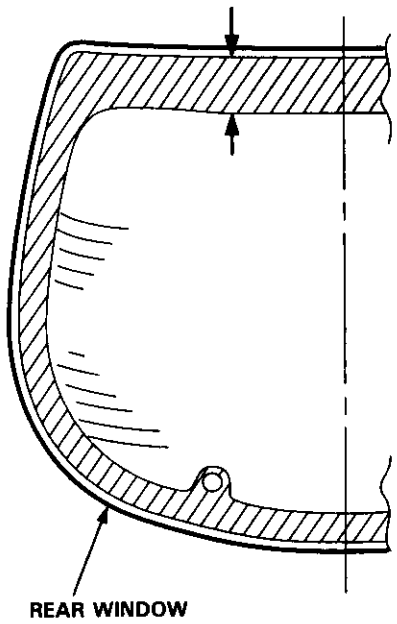

4. Apply the upper seal to the inside face of glass as shown.

5. Glue the upper fasteners, lower fasteners and side spacers, to the inside face of the rear window on each side.

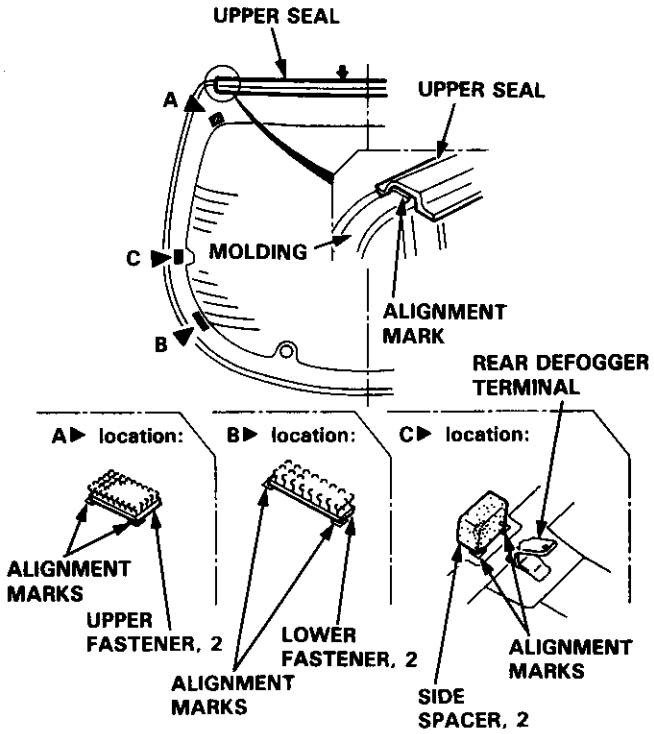

6. Glue the lower fasteners and upper fasteners to the hatch, as shown.

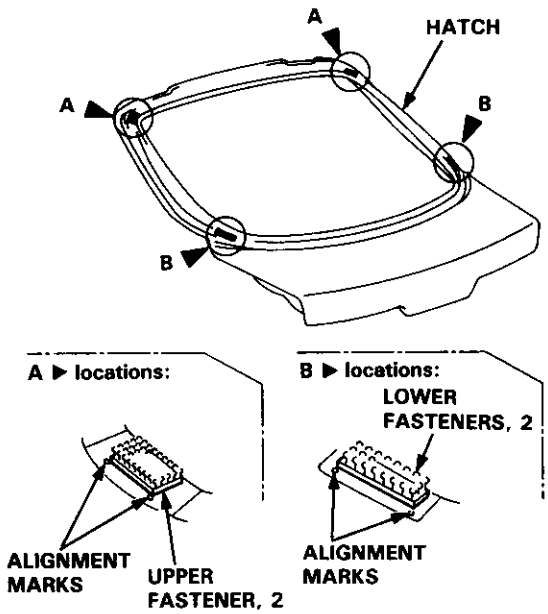

7. Set the rear window upright on the hatch, then center it in the opening. Make alignment marks across the rear window and body with a grease pencil at the four points shown.

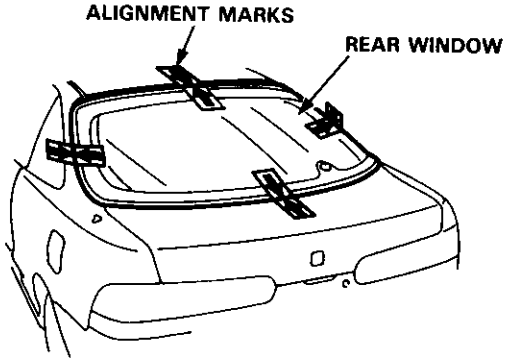

8. Remove the rear window.

9. Center and glue the side rubber dams to the inside face of the rear window, as shown, to contain the adhesive during installation.

NOTE:
- Glue the side rubber dams, using the printed dots as a guide.
- Be careful not to touch the rear window, where adhesive will be applied.
- Mask off surrounding surfaces before applying primer.

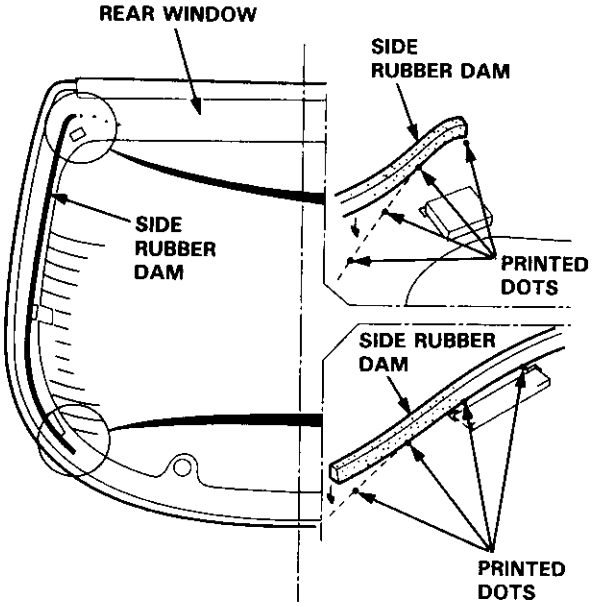

10. Install the rear window trim.

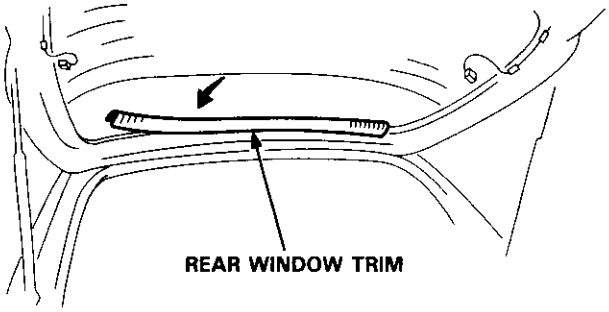

11. With a sponge, apply a light coat of glass primer around the edge of the rear window, then lightly wipe it off with gauze or cheesecloth.

NOTE:
- Do not apply body primer to the rear window, and do not get body and glass primer sponges mixed up.
- Never touch the primed surfaces with your hands. If you do, the adhesive may not bond to the rear window properly, causing a leak after the rear window is installed.
- Keep water, dust, and abrasive materials away from the primed surface.

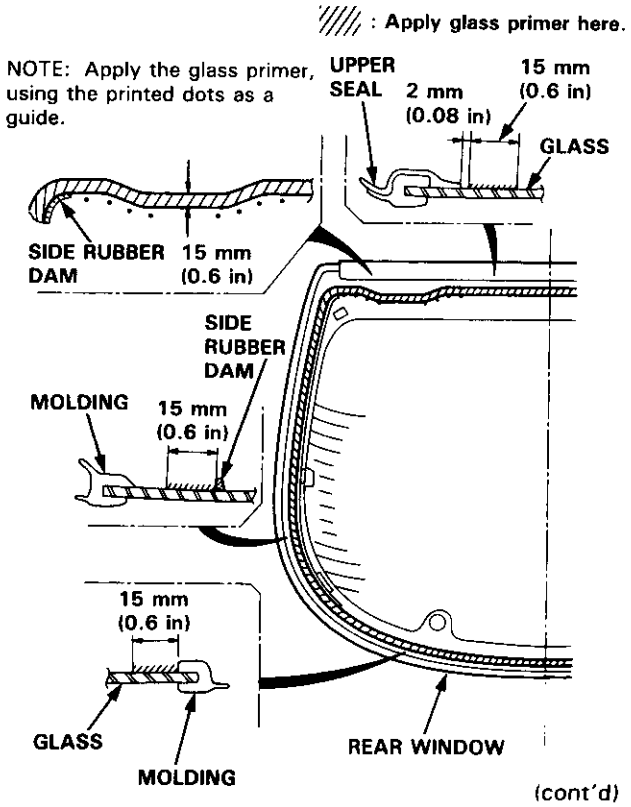

(cont'd)

Installation (cont'd)

12. With a sponge, apply a light coat of body primer to the original adhesive remaining around the rear window opening flange. Let the body primer dry for at least 10 minutes.

    NOTE:
    - Do not apply glass primer to the body, and be careful not to mix up glass and body primer sponges.
    - Never touch the primed surfaces with your hands.

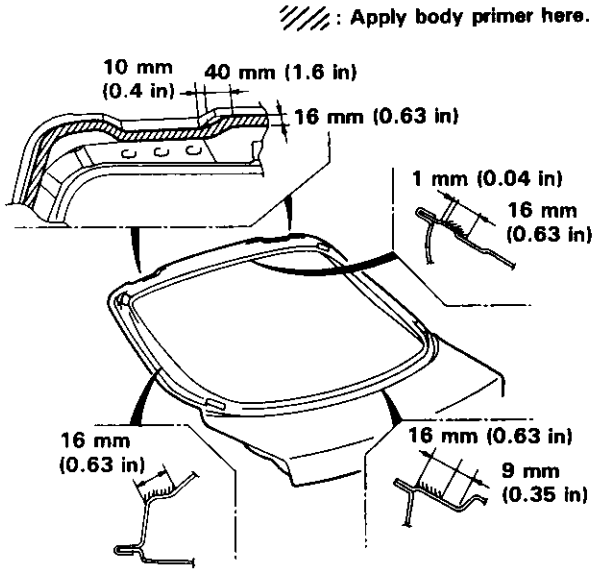

13. Thoroughly mix the adhesive and hardener together on a glass or metal plate with a putty knife.

    NOTE:
    - Clean the plate with a sponge and alcohol before mixing.
    - Follow the instructions that came with the adhesive.

14. Before filling a cartridge, cut the end of the nozzle, as shown.

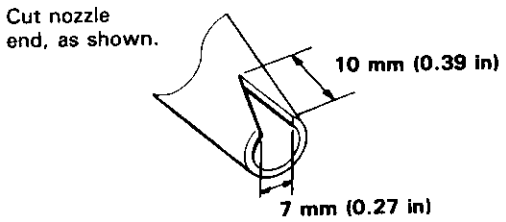

15. Pack adhesive into the cartridge without air pockets to ensure continous delivery. Put the cartridge in a caulking gun, and run a bead of adhesive around the edge of the rear window, as shown.

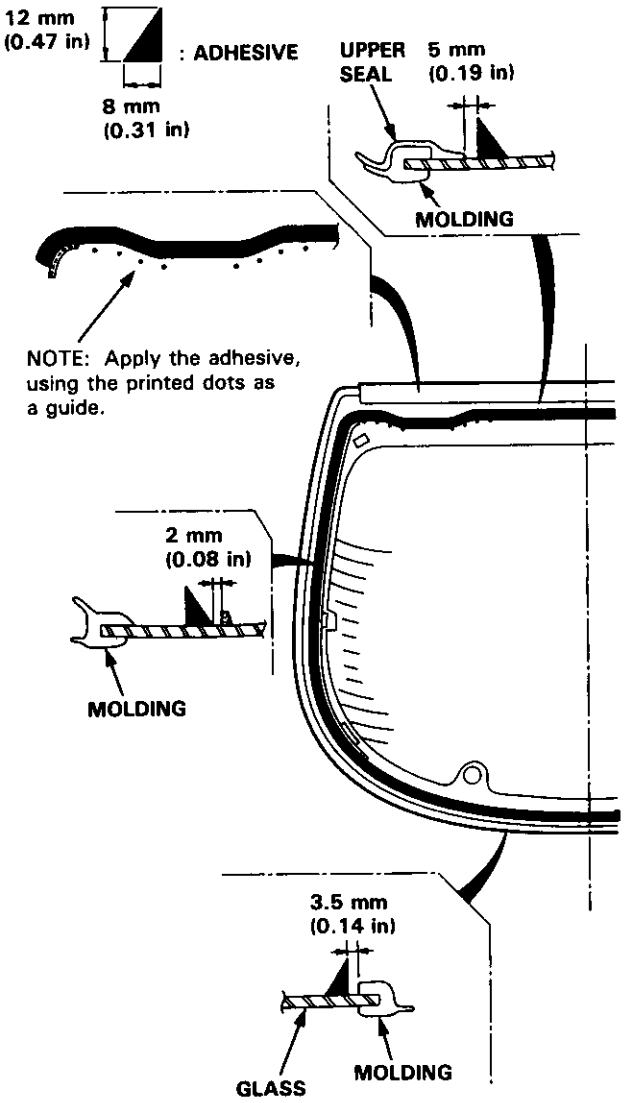

16. Use suction cups to hold the rear window over the opening, align it with the alignment marks made in step 7, and set it down on the adhesive. Lightly push on the rear window until its edges are fully seated on the adhesive all the way around.

    NOTE: Do not open or close the doors until the adhesive is dry.

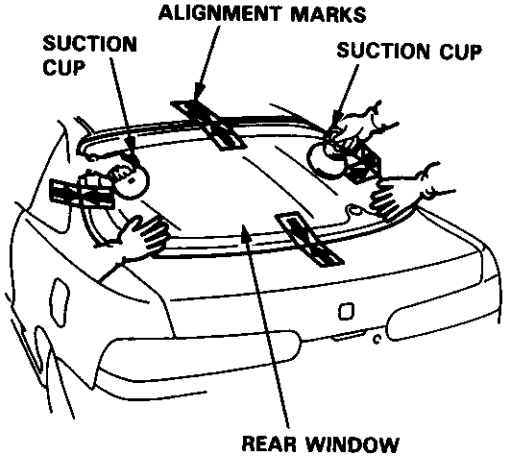

17. Scrape or wipe the excess adhesive off with a putty knife or towel.

    NOTE: To remove adhesive from a painted surface or the rear window, use a soft shop towel dampened with alcohol.

18. Let the adhesive dry for at least one hour, then spray water over the rear window and check for leaks. Mark leaking areas and let the rear window dry, then seal with sealant.

    NOTE: Let the car stand for at least four hours after rear window installation. If the car has to be used within the first four hours, it must be driven slowly.

19. Reinstall all remaining removed parts.

Replacement

1. Remove the rear window, then remove the upper seal.

2. Place the rear window on its surface, as shown, with a helper holding the rear window.

   CAUTION: Avoid setting the rear window on its edges: small chips may later develop into cracks.

3. Cut the inner side rubber portion ① off the molding, then cut the top rubber portion ②.

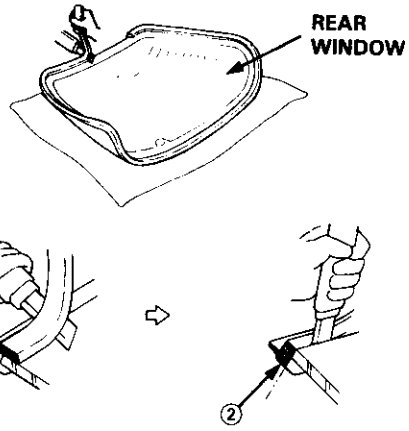

4. Turn the rear window over, then cut the outer side rubber portion ③ of the molding.

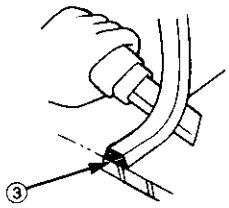

5. Scrape all traces of old molding from the chamfered edges of the glass.

   NOTE: Be sure to scrape all traces of old molding thoroughly.

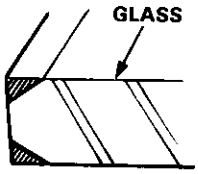

6. Clean the rear window surface with alcohol where new molding is to be installed.

   NOTE: Make sure the surface is kept free of water, oil and grease.

(cont'd)

Replacement (cont'd)

7. With a brush, apply a light coat of glass primer around the edge of the glass.

   NOTE: Scrape off excess glass primer with a putty knife after installing new molding.

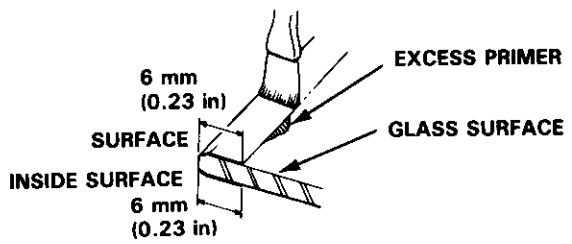

8. Degrease the inner surfaces of new molding thoroughly, then apply a light coat of glass primer to the surfaces.

   NOTE:
   - Apply glass primer around the entire groove of the new molding.
   - Do not apply glass primer to the outer surface.

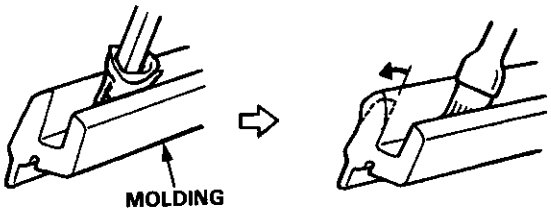

9. Run a bead of adhesive in the groove of the molding.

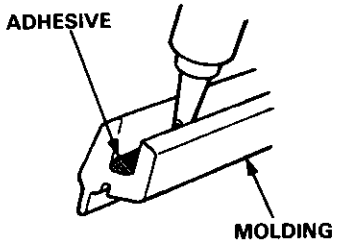

10. Place the rear window outside-up, then align the joint of the molding with the "T" mark at the top of the glass as shown.

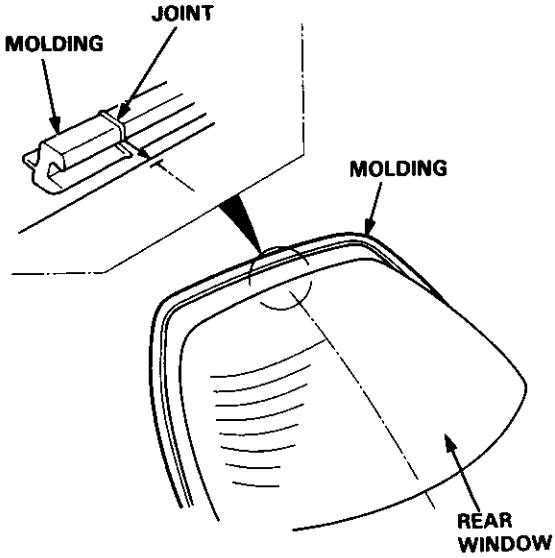

11. Press the molding into position around the entire edge of the rear window.

    NOTE: Check that the molding is not wrinkled or lifted away at corners.

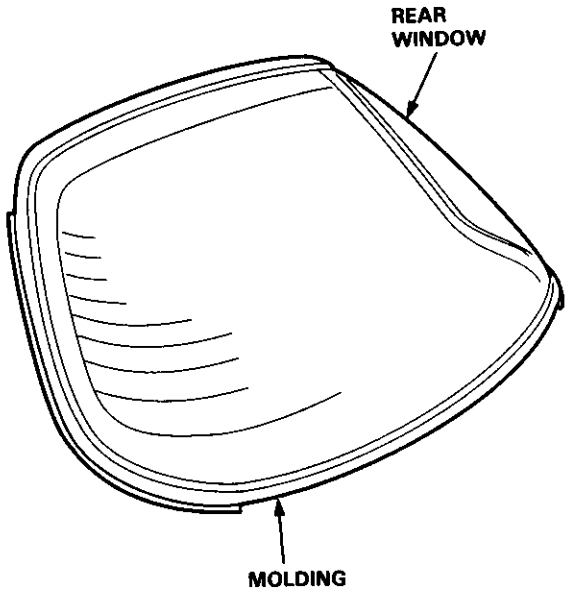

12. Scrape or wipe the excess adhesive off with a putty knife or gauge.

NOTE: Clean the molding and rear window surface with alcohol where upper seal is to be applied.

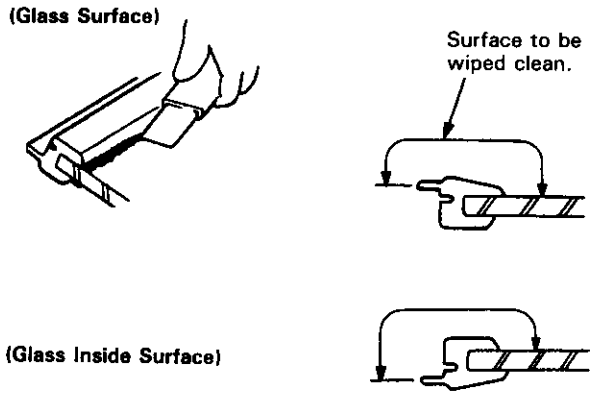

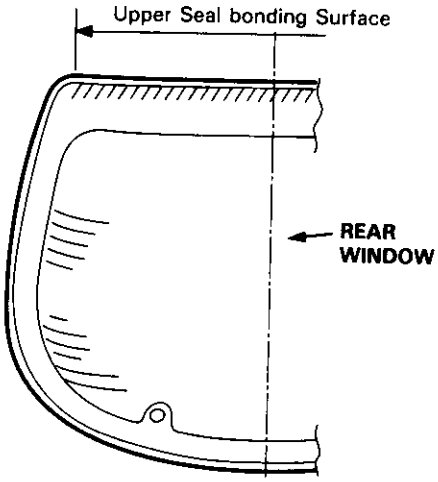

13. Apply the upper seal to the inside face of glass (see page 20-62).

14. After the adhesive is dry, use suction cups to hold the rear window over the opening, set the rear window on the hatch, then center it in the opening.

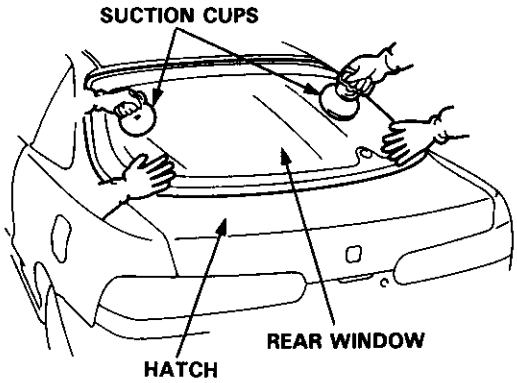

15. Scribe a line on the molding lip with a grease pencil to show the cutting portion of the molding lip, as shown.

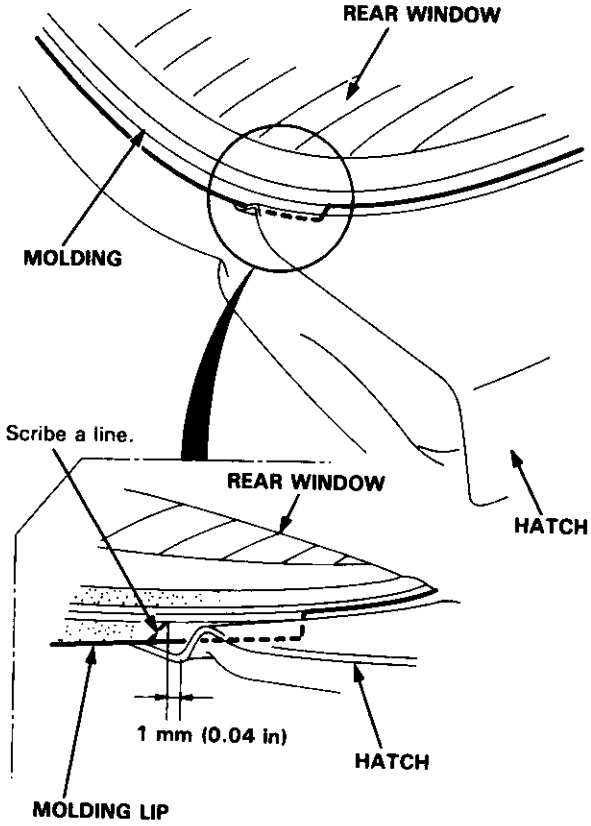

16. Cut the molding lip off, as shown.

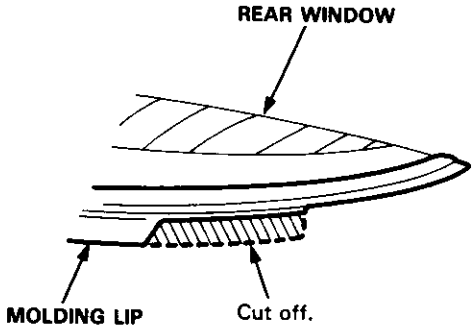

17. Close the hatch, then check the gap between the molding lip and body.

18. If the molding lip contacts the body, cut the molding lip off, keeping the gap parallel with the body.

Rear Window

Removal

Sedan

CAUTION:
- **Wear gloves to remove and install the rear window.**
- **Do not damage the defroster grid lines.**

1. To remove the rear window, first remove:
   - Trunk lid (see page 20-149)
   - Rear seat-back side bolsters (see page 20-111)
   - Rear shelf (see page 20-95)
   - Rear pillar trim panel (see page 20-95)

2. Disconnect the defroster leads, and remove their holders.

   NOTE: Avoid scratching the rear window with the cutter blade.

3. Remove the clips, then remove the lower cover.

   NOTE: Use a clip remover to remove the clips.

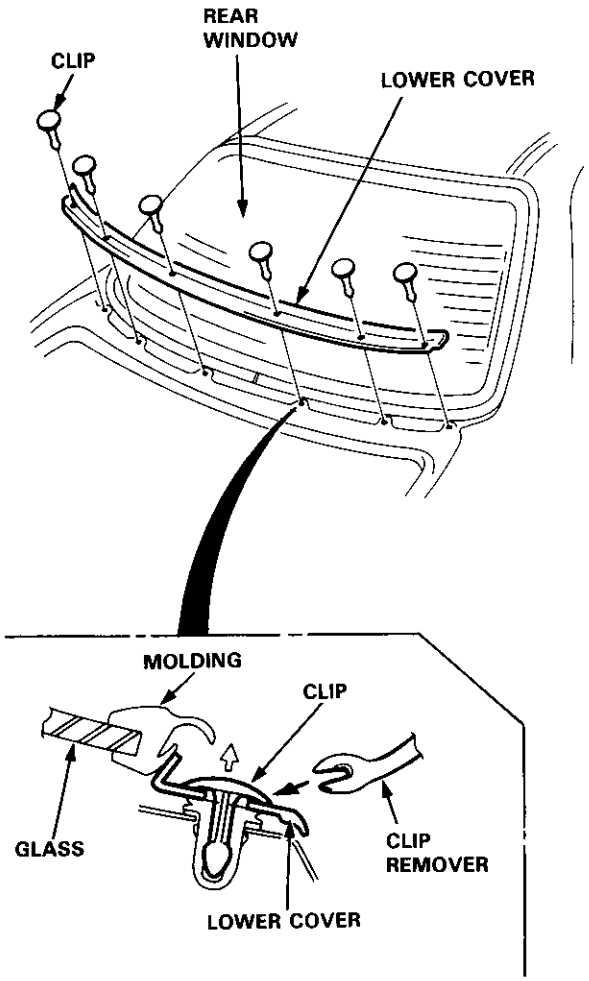

4. Peel off the molding.

   NOTE: When molding removal is difficult, cut the molding with a knife.

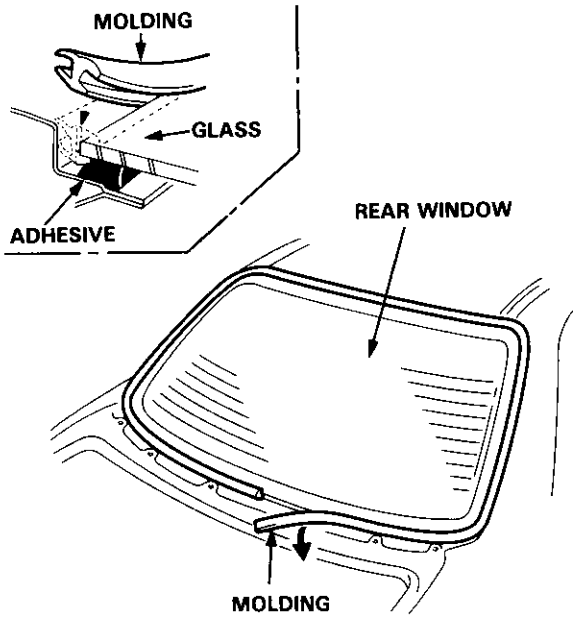

5. Pull down the rear of the headliner (see page 20-101).

   CAUTION: Take care not to bend the headliner excessively.

6. Apply protective tape to the edge of the body, as shown.
   Using an awl, make a hole through the adhesive from inside the car. Push the piano wire through the hole and wrap each end around a piece of wood.

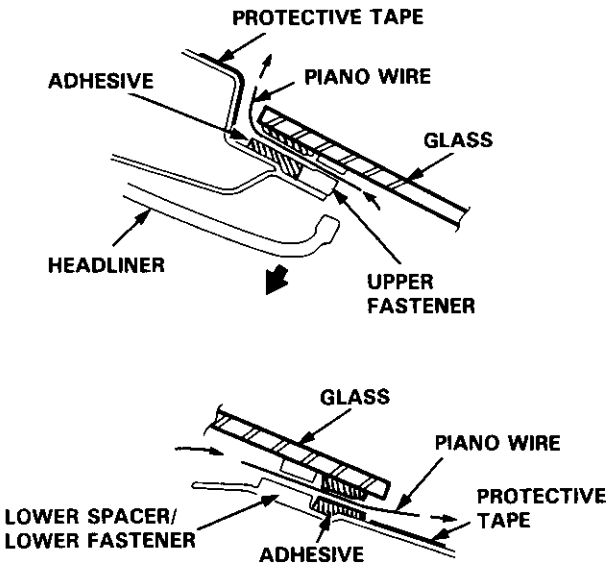

7. With a helper on the outside, pull the piano wire back and forth in a sawing motion, and carefully cut through the adhesive around the entire rear window.

CAUTION: Hold the piano wire as close to the rear window as possible to prevent damage to the body.

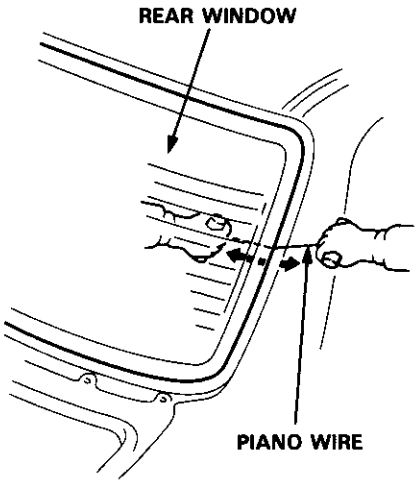

8. Carefully remove the rear window.

Installation

1. Scrape the old adhesive smooth with a knife, to a thickness of about 2 mm (0.08 in) on the bonding surface around the entire rear window opening flange.

   NOTE:
   - Do not scrape down to the painted surface of the body; damaged paint will interfere with proper bonding.
   - Remove the upper and lower fasteners from the body.
   - Mask off surrounding surfaces before applying primer.

2. Clean the body bonding surface with a sponge dampened in alcohol.

   NOTE: After cleaning, keep oil, grease and water from getting on the surface.

3. If the old rear window is to be reinstalled, use a putty knife to scrape off all traces of old adhesive, then clean the rear window surface with alcohol where new adhesive is to be applied.

   NOTE: Make sure the bonding surface is kept free of water, oil and grease.

   CAUTION: Avoid setting the rear window on its edges; small chips may later develop into cracks.

NOTE: Clean the shadowed area.

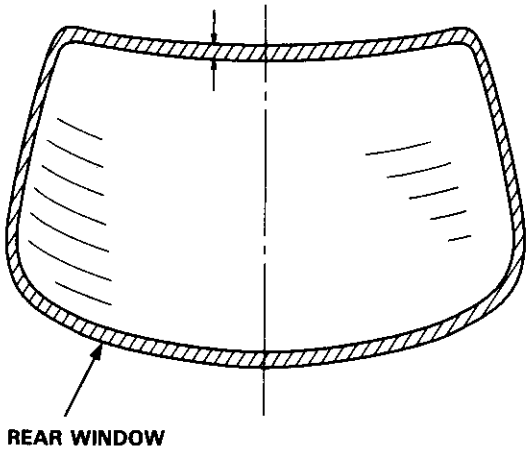

(cont'd)

Installation (cont'd)

4. Apply the double-faced adhesive tape to the inside of the rear window, as shown.

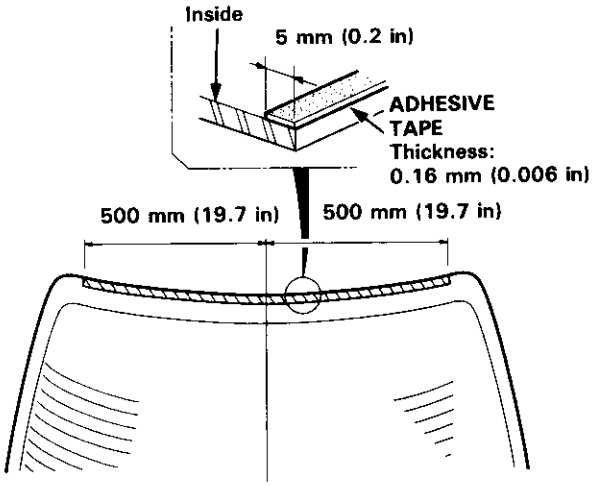

5. Glue the molding around the edge of the rear window, as shown.

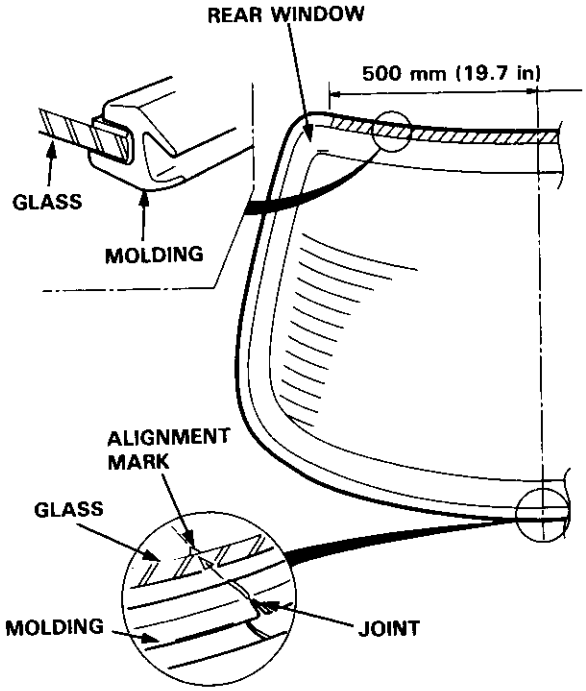

6. Install the upper fasteners and glue the lower fasteners to the body, as shown.

NOTE: The numbers after the parts names show quantity of the part used.

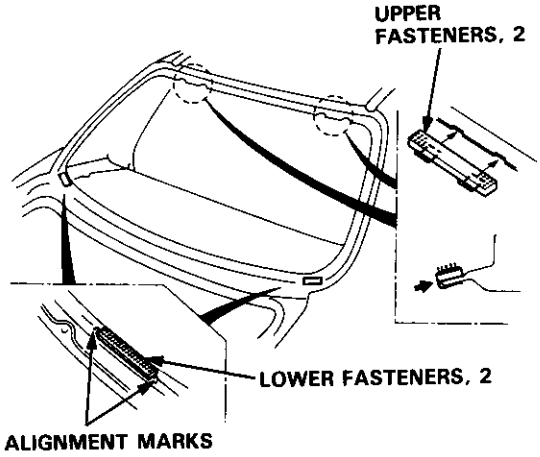

7. Glue the side and lower spacers and fasteners to the inside face of the rear window and molding, as shown.

NOTE: The numbers after the part names show the quantities of the parts used.

▶ : Spacer, fastener locations

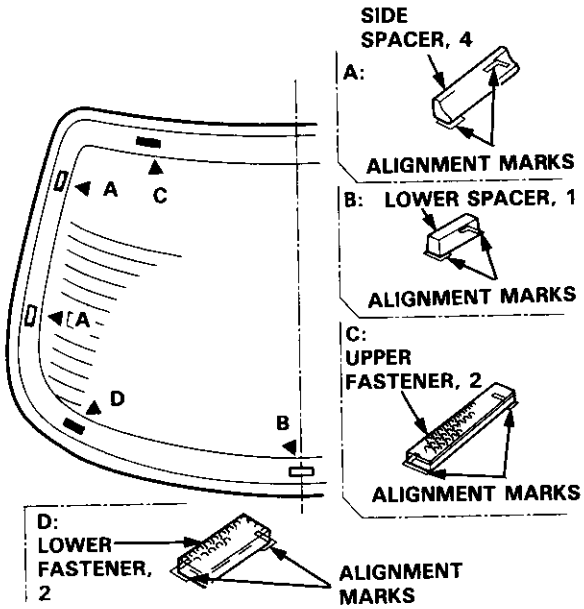

8. Set the rear window, then center it in the opening. Make alignment marks across the rear window and body with a grease pencil at the four points shown.

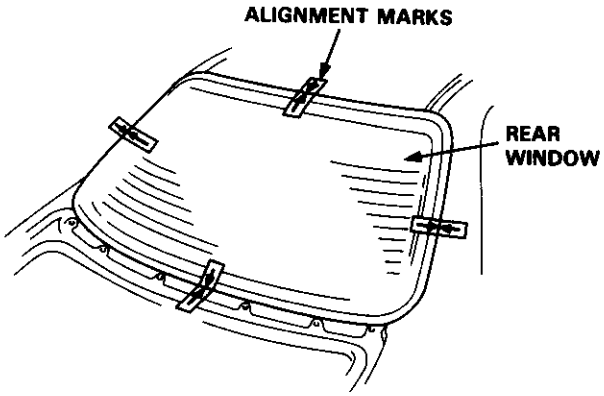

9. Remove the rear window.

10. With a sponge, apply a light coat of glass primer around the edge of the rear window as shown, then lightly wipe it off with gauze or cheesecloth.

NOTE:
- Do not apply body primer to the rear window, and do not get body and glass primer sponges mixed up.
- Never touch the primed surfaces with your hands. If you do, the adhesive may not bond to the rear window properly, causing a leak after the rear window is installed.
- Keep water, dust, and abrasive materials away from the primed surface.

: **Apply glass primer here.**

All around.

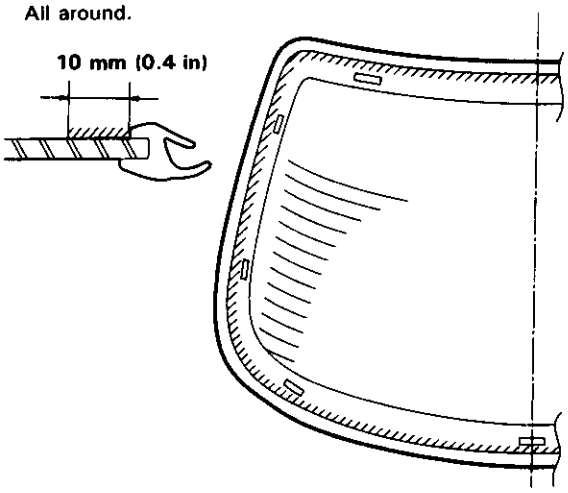

11. With a sponge, apply a light coat of body primer to the original adhesive remaining around the rear window opening flange. Let the body primer dry for at least 10 minutes.

NOTE:
- Do not apply glass primer to the body, and be careful not to mix up glass and body primer sponges.
- Never touch the primed surfaces with your hands.

: **Apply body primer here.**

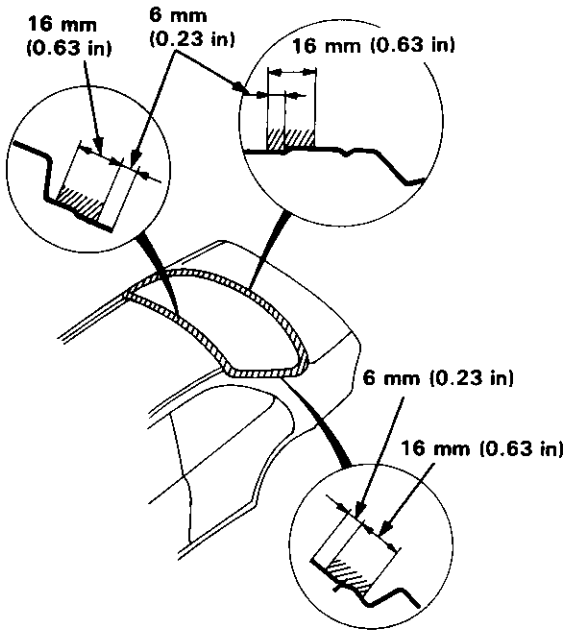

12. Thoroughly mix the adhesive and hardener together on a glass or metal plate with a putty knife. Follow the instructions that came with the adhesive.

NOTE: Clean the plate with a sponge and alcohol before mixing.

13. Before filling a cartridge, cut the end of the nozzle, as shown.

Cut nozzle end, as shown.

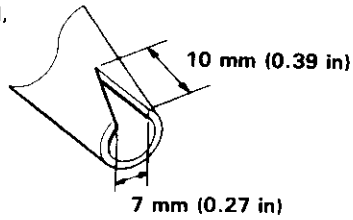

(cont'd)

Installation (cont'd)

14. Pack adhesive into the cartridge without air pockets to ensure continuous delivery. Put the cartridge in a caulking gun, and run a bead of adhesive around the edge of the rear window, as shown.

    NOTE: Apply the adhesive within 30 minutes after applying the glass primer.

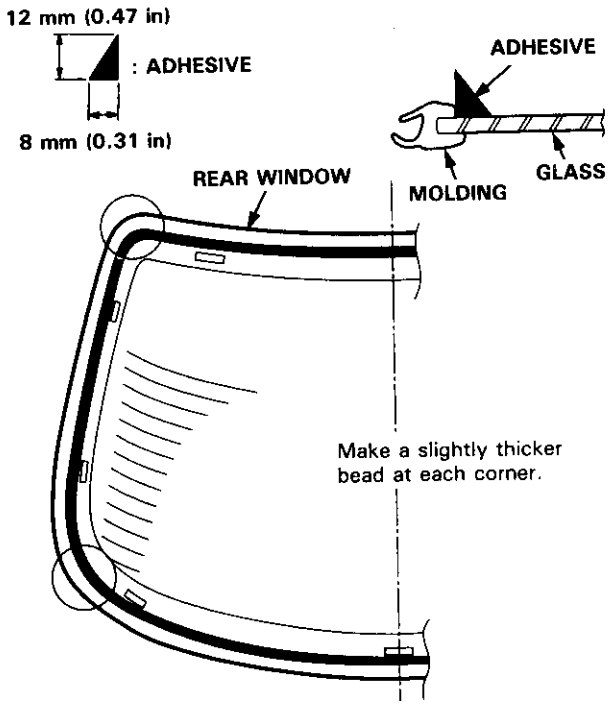

15. Use suction cups to hold the rear window over the opening, align it with the alignment marks made in step 8, and set it down on the adhesive. Lightly push on the rear window until its edges are fully seated on the adhesive all the way around.

    NOTE: Do not close or open the doors until the adhesive is dry.

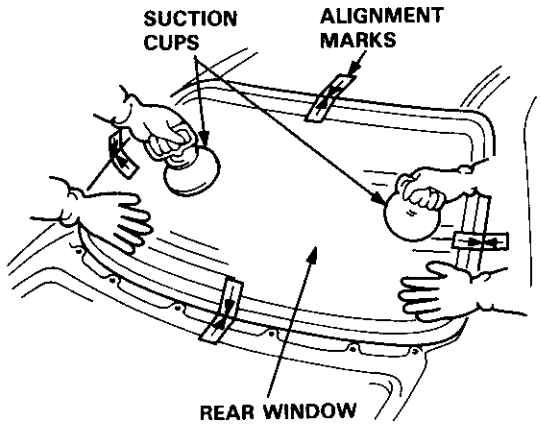

16. Scrape or wipe the excess adhesive off with a putty knife or towel.

    NOTE: To remove adhesive from a painted surface or the rear window, use a soft shop towel dampened with alcohol.

17. Install the lower cover.

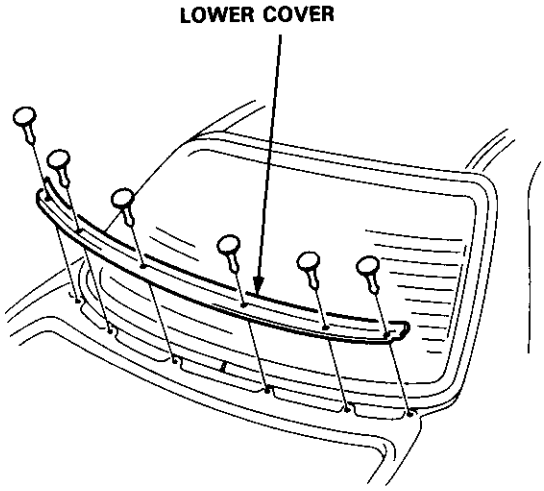

18. Let the adhesive dry for at least one hour, then spray water over the rear window and check for leaks. Mark leaking areas, let the rear window dry, then seal with sealant.

    NOTE: Let the car stand for at least four hours after rear window installation. If the car has to be used within the first four hours, it must be driven slowly.

19. Raise the headliner back up into position, then install:
    - Rear pillar trim panel
    - Rear shelf
    - Rear seat-back side bolsters

Quarter Glass

Replacement

CAUTION:
- **Wear gloves to remove and install the quarter glass.**
- **Use seat covers to avoid damaging any surfaces.**

NOTE: Replace the quarter glass with new one when removing it.

1. To remove the quarter glass, first remove the quarter trim (see page 20-93).

2. Apply protective tape to the edge of the quarter pillar trim panel and body as shown.
   Using an awl, make a hole through the adhesive from inside the car. Push the piano wire throught the hole, and wrap each end around a piece of wood.

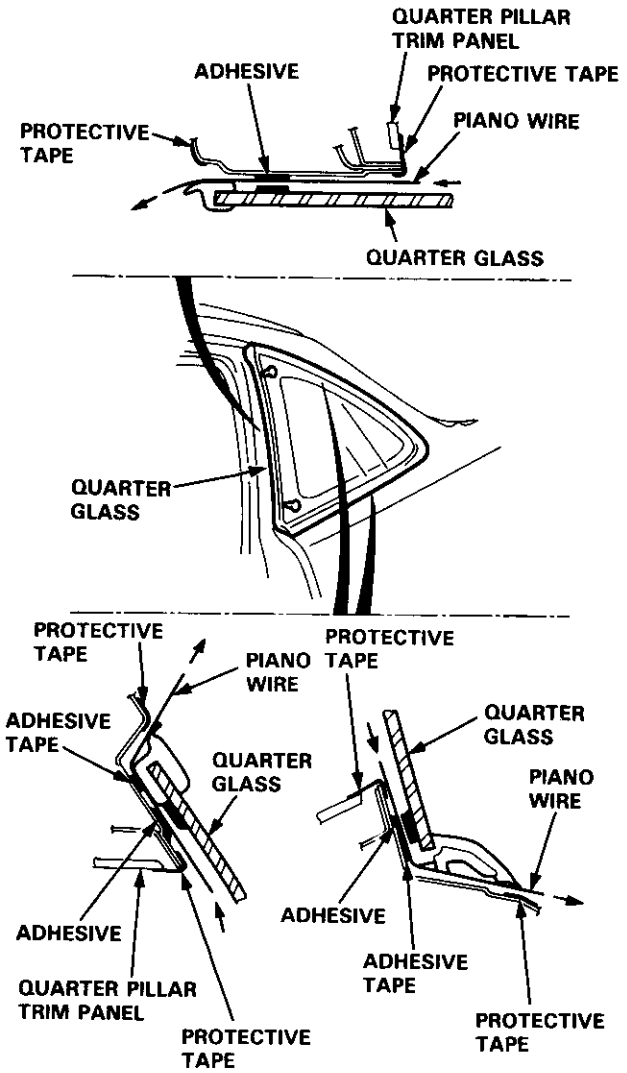

3. Pull the piano wire back and forth in a sawing motion, and carefully cut through the adhesive around the entire quarter glass.

   CAUTION: Hold the piano wire as close to the quarter glass as possible to prevent damage to the body and quarter pillar trim panel.

   NOTE: When each corner cut is difficult, use a knife to cut through the adhesive from inside the car.

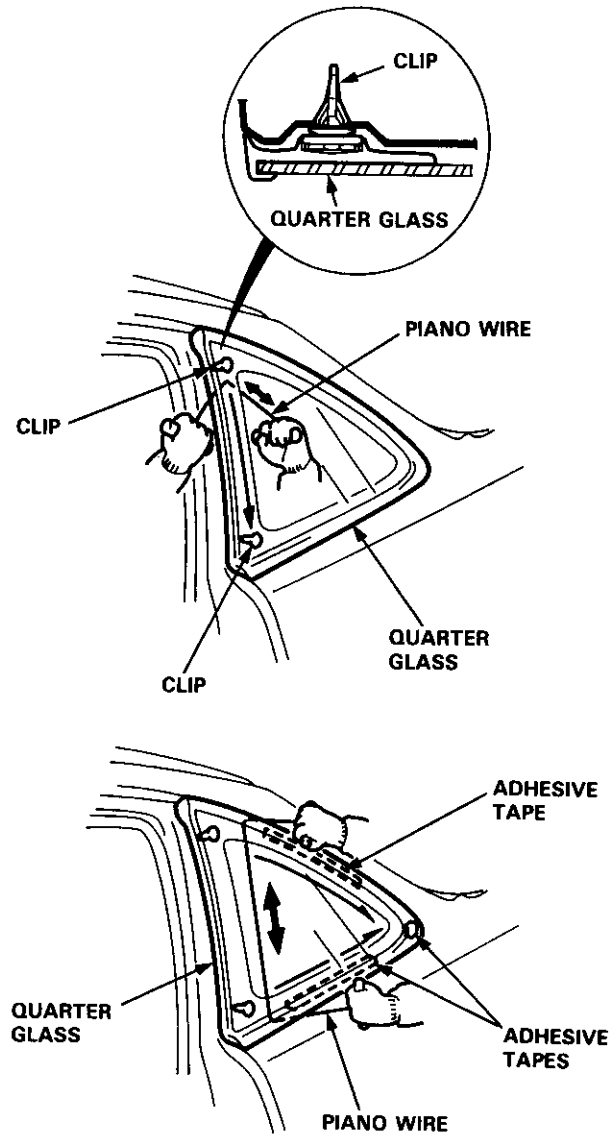

4. Carefully remove the quarter glass.

(cont'd)

Replacement (cont'd)

5. Scrape the old adhesive smooth with a knife, to a thickness of about 2 mm (0.08 in) on the bonding surface around the entire quarter glass opening flange.

   NOTE:
   - Do not scrape down to the painted surface of the body: damaged paint will interfere with proper bonding.
   - Mask off surrounding surfaces before applying primer.

6. Clean the body bonding surface with a sponge dampened in alcohol.

   NOTE: After cleaning, keep oil, grease and water from getting on the surface.

7. Clean the new quarter glass surface with alcohol where adhesive is to be applied.

   NOTE: Make sure the bonding surface is kept free of water, oil and grease.

   CAUTION: Avoid setting the quarter glass on its edges; small chips may later develop into cracks.

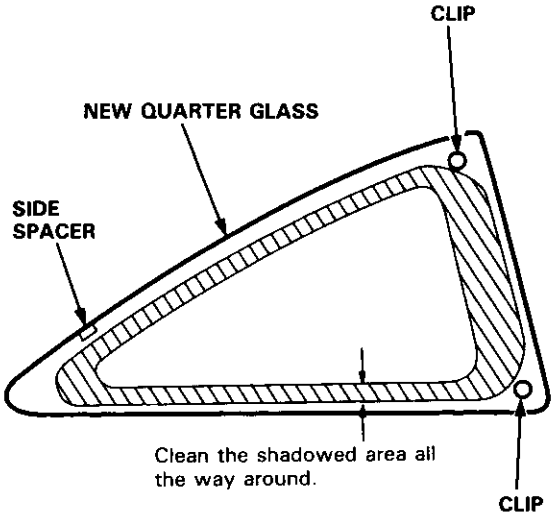

8. Apply the double-faced adhesive tapes to the molding, as shown.

   NOTE:
   - Be careful not to touch the quarter glass where adhesive will be applied.
   - Do not peel the separator off the double-faced adhesive tapes.

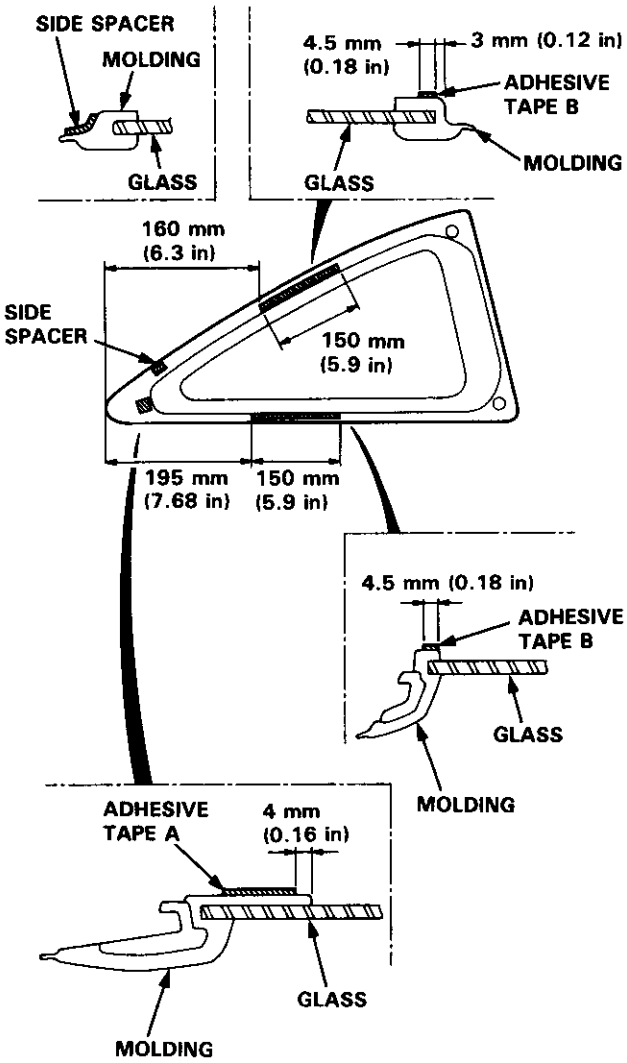

9. With a sponge, apply a light coat of glass primer to the inside face of the quarter glass, as shown, then lightly wipe it off with gauze or cheesecloth.

NOTE:
- Do not apply body primer to the quarter glass, and do not get body and glass primer sponges mixed up.
- Never touch the primed surfaces with your hands. If you do, the adhesive may not bond to the quarter glass properly, causing a leak after the quarter glass is installed.
- Keep water, dust, and abrasive materials away from the primed surface.

////// : **Apply glass primer here.**

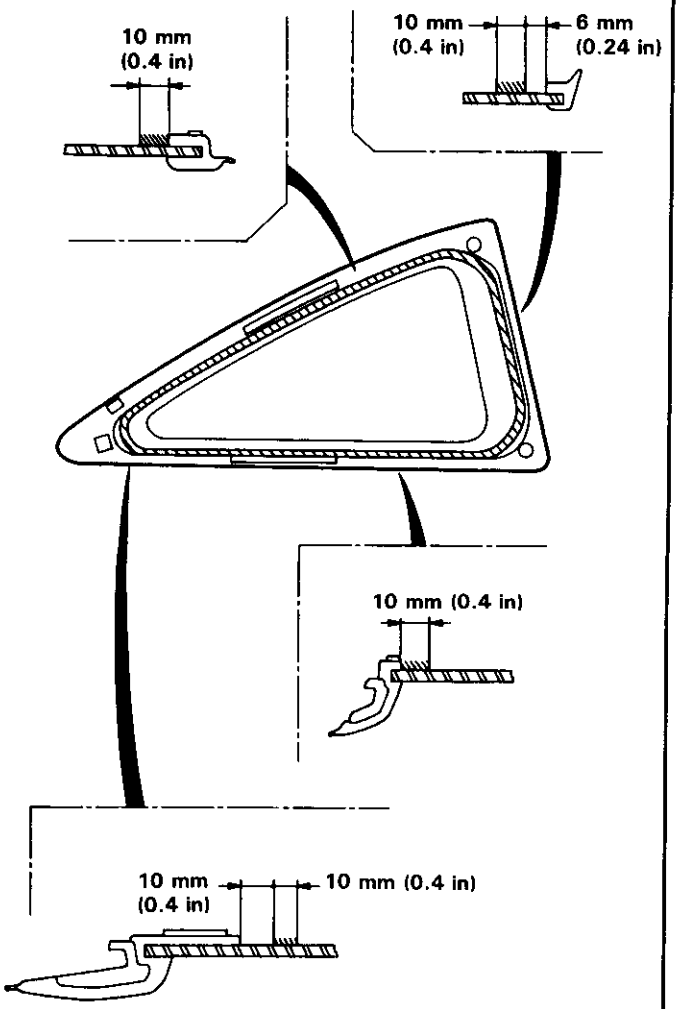

10. Install the quarter trim.

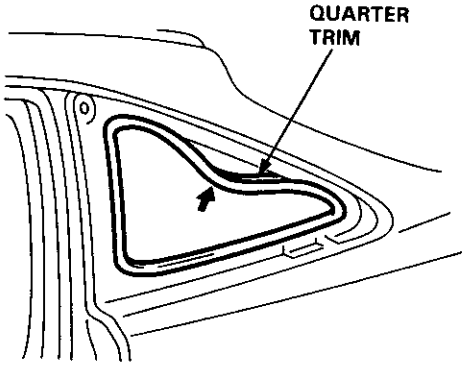

11. With a sponge, apply a light coat of body primer to the original adhesive remaining around the quarter glass opening flange.
Let the body primer dry for at least 10 minutes.

NOTE:
- Do not apply glass primer to the body, and be careful not to mix up glass and body primer sponges.
- Never touch the primed surfaces with your hands.

////// : **Apply body primer here.**

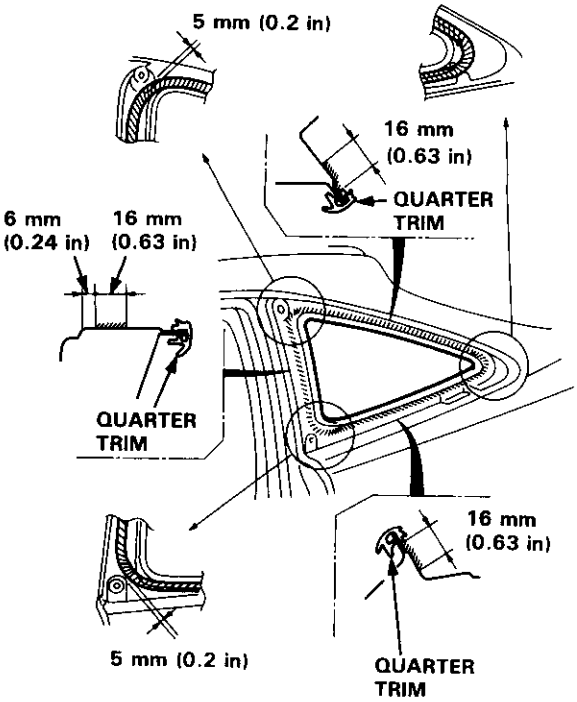

(cont'd)

Replacement (cont'd)

12. Thoroughly mix the adhesive and hardener together on a glass or metal plate with a putty knife.

    NOTE:
    - Clean the plate with a sponge and alcohol before mixing.
    - Follow the instructions that came with the adhesive.

13. Before filling a cartridge, cut the end of the nozzle, as shown.

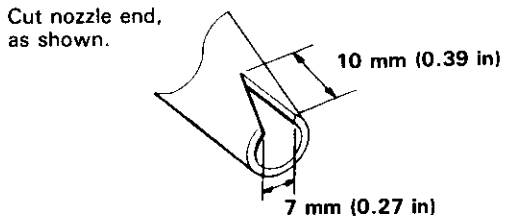

14. Pack adhesive into the cartridge without air pockets to ensure continuous delivery. Put the cartrige in a caulking gun, and run a bead of adhesive around the edge of the quarter glass as shown.

    NOTE:
    - After applying the adhesive, peel the separator off the double-faced adhesive tapes.
    - Apply the adhesive within 30 minutes after applying the glass primer.

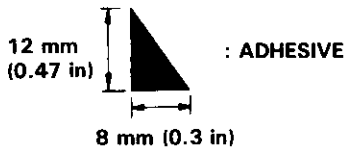

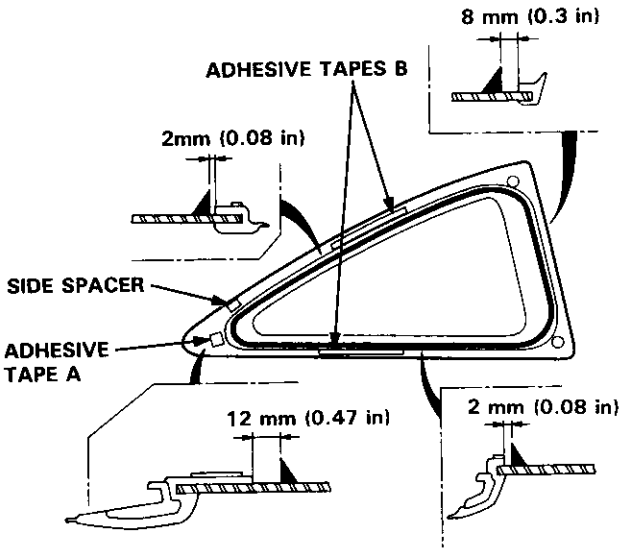

15. Install the fasteners to the body as shown.

16. Use suction cups to hold the quarter glass over the opening, align it with the clip setting points, and set it down on the adhesive. Lightly puch on the quarter glass until its edges are fully seated on the adhesive all the way around.

    NOTE: Do not open or close the doors until the adhesive is dry.

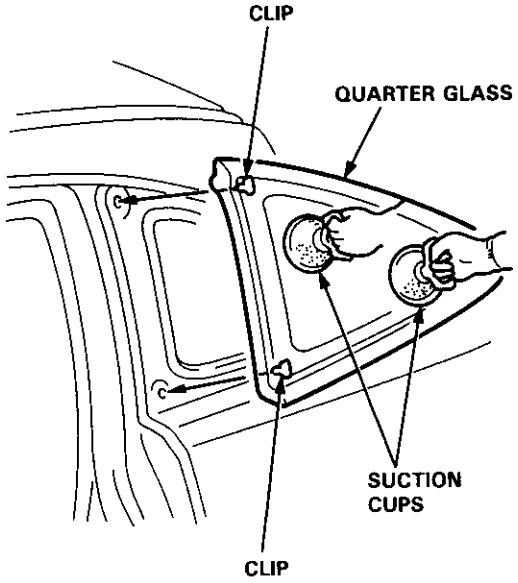

17. Scrape or wipe the excess adhesive off with a putty knife or towel.

    NOTE: Use a soft shop towel dampened with alcohol to remove adhesive from a painted surface or the quarter glass.

18. Let the adhesive dry for at least one hour, then spray water over the quarter glass and check for leaks. Mark leaking areas and let the quarter glass dry, then seal with sealant.

    NOTE: Let the car stand for at least four hours after quarter glass installation. If the car has to be used within the first four hours, it must be driven slowly.

19. Reinstall all remaning removed parts.

Index

Hatchback

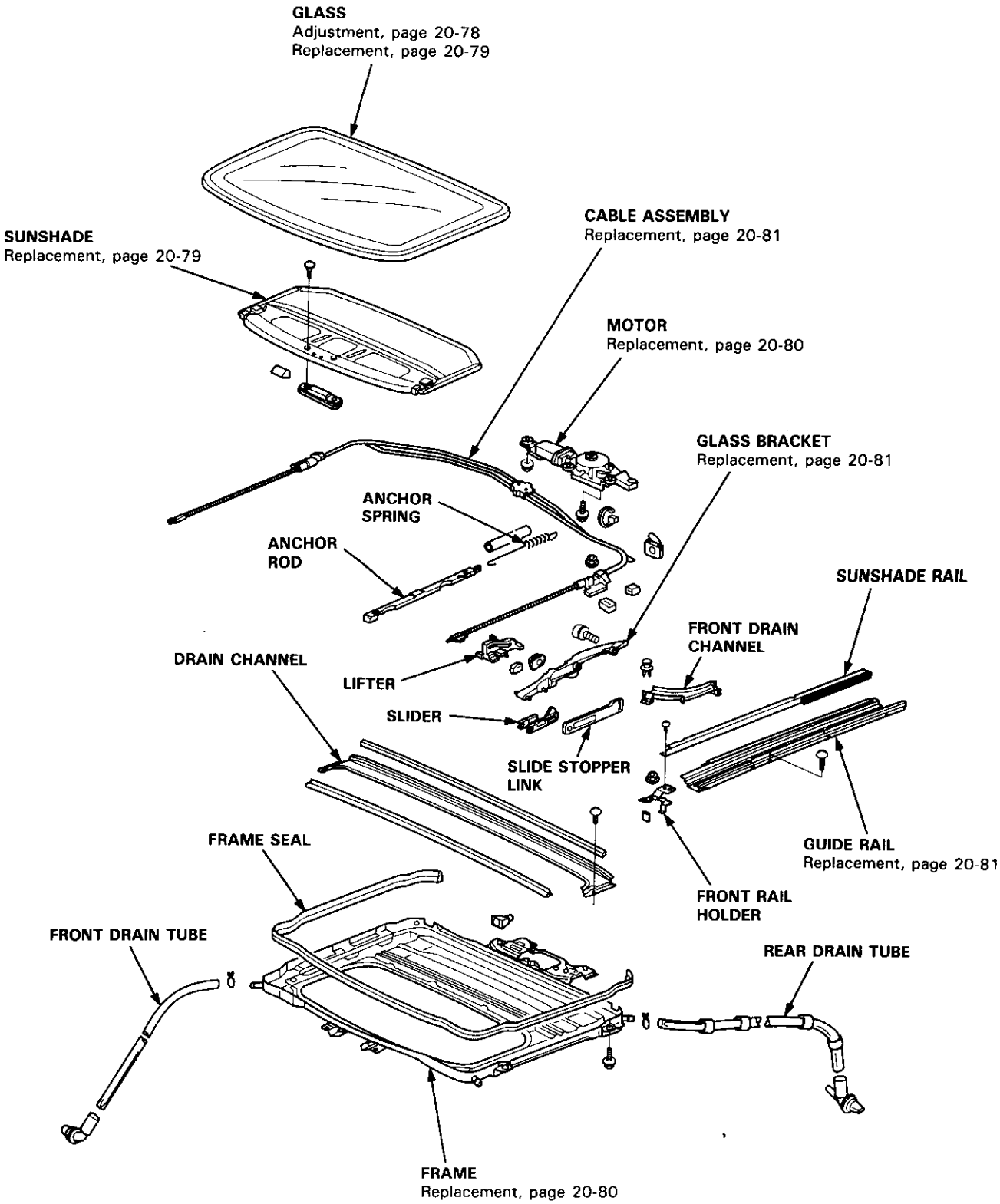

Moonroof

Troubleshooting

Symptom	Probable Cause
Water leaks	1. Clogged drain tube. 2. Gap between glass weatherstrip and roof panel. 3. Defective or improperly installed glass weatherstrip. 4. Gap between drain seal and roof panel.
Wind noise	1. Excessive clearance between glass weatherstrip and roof panel.
Motor noise	1. Loose motor. 2. Worn gear or bearing. 3. Cable assembly deformed.
Glass does not move, but motor turns	1. Clutch out of adjustment. 2. Foreign matter stuck between guide rail and slider. 3. Inner cable loose. 4. Cable assembly not attached properly.
Glass does not move and motor does not turn (glass can be moved with moonroof wrench)	1. Blown fuse. 2. Faulty switch. 3. Battery run down. 4. Defective motor. 5. Faulty realy.

Glass Height Adjustment

The roof panel should be even with the glass weatherstrip, to within 1.8 ± 0.5 mm (0.07 ± 0.02 in) all the way around. If not, slide the sunshade back, and:

1. Tilt-up the glass.
2. Loosen the bolts and adjust the glass.
3. Repeat on opposite side if necessary.

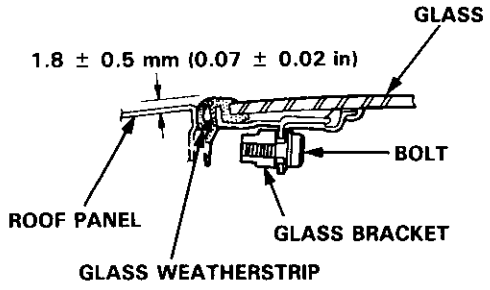

4. Side-to-side fit of glass weatherstrip can be adjusted by loosening the frame mounting bolts and moving the frame right or left and forward or backward by hand (see page 20-80).

▼: Bolt locations, 6

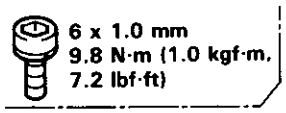

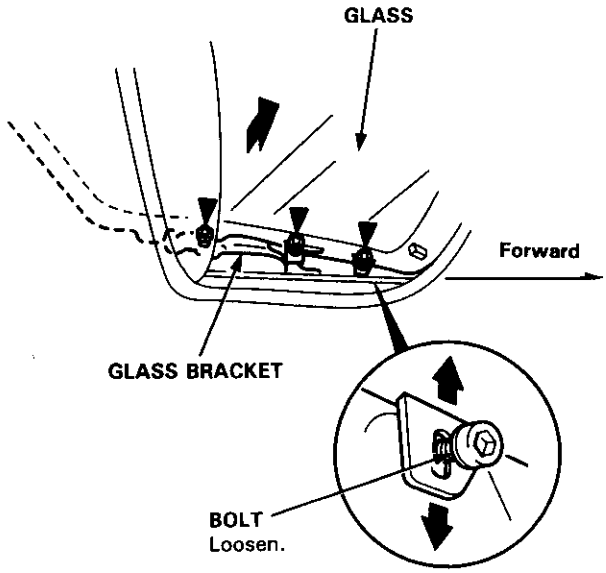

Rear Edge Closing Adjustment

Open the glass about a foot, then close it to check where rear edge begins to rise. If it rises too soon and seats too tightly against the roof panel, or too late and does not seat tightly enough, adjust it.

1. Remove the headliner (see page 20-98).
2. Remove the glass.
3. Remove the motor (see page 20-80).
4. Align the tilt-up position of the lifter on each side.

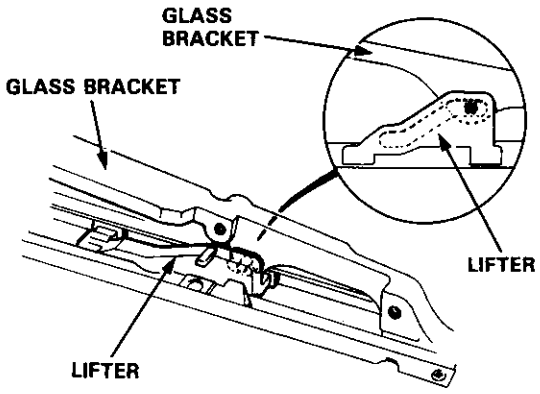

5. Check that the alignment left and right, then install the motor.
6. Install the glass, then check for water leaks.

   NOTE: Do not use high pressure water.
7. Install the headliner.

Glass and Sunshade Replacement

1. Open the sunshade.
2. Tilt-up the glass.
3. Remove the bolts, then remove the glass from the glass bracket.

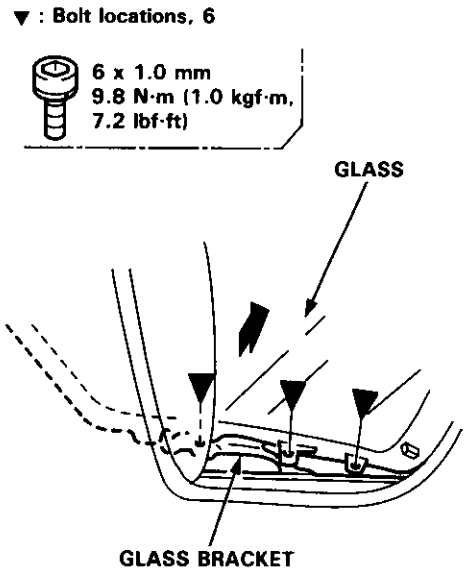

4. Remove the screw and lift the sunshade rail on each side.
5. Silde the sunshade forward, then remove the sunshade.

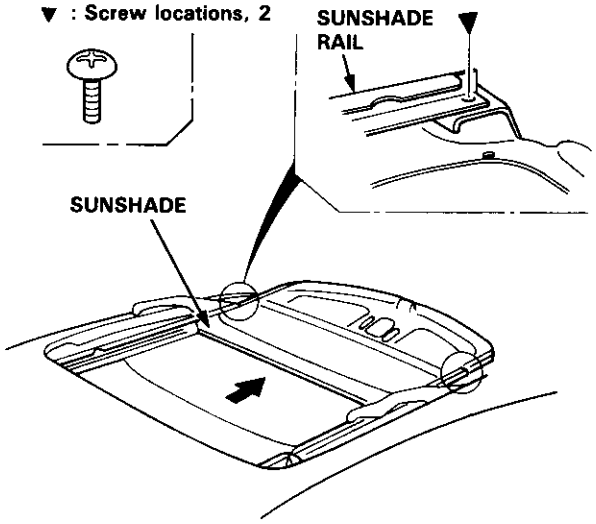

6. Installation is the reverse of the removal procedure.
7. Check for water leaks.

   NOTE: Do not use high pressure water.

Motor, Drain Tube and Frame Replacement

CAUTION: Be careful not to damage the seats, dashboard and other interior trim.

1. Remove the glass (see page 20-79) and headliner (see page 20-98).

2. Disconnect the motor connector, and remove the clips securing the ceiling light wire harness.

◁ : **Clip locations, 2**

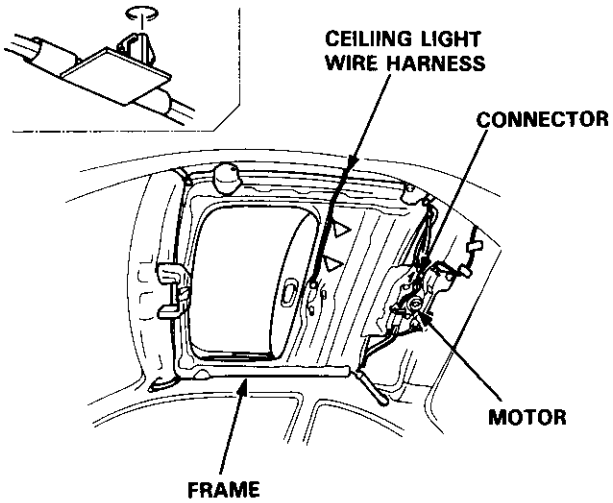

3. Remove the bolts and nuts, then remove the motor, if necessary.

   NOTE: Make sure both sliders are parallel when installing the motor.

▲ : **Bolt, nut locations**

A▲ : Bolt, 2

6 x 1.0 mm
9.8 N·m
(1.0 kgf·m,
7.2 lbf·ft)

B▲ : Nut, 3

6 x 1.0 mm
9.8 N·m
(1.0 kgf·m,
7.2 lbf·ft)

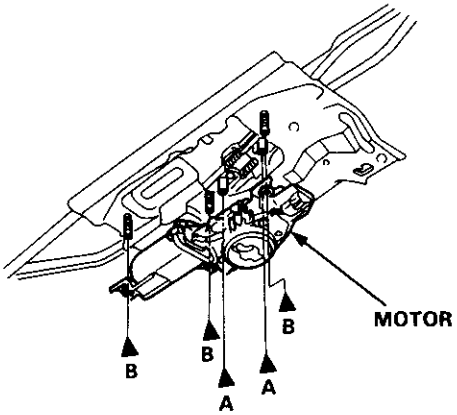

4. Disconnect the drain tubes.

5. Remove the bolts, then remove the frame from the car.

   NOTE: You may require assistance when removing the frame.

▲ : **Bolt locations, 8**

6 x 1.0 mm
9.8 N·m (1.0 kgf·m,
7.2 lbf·ft)

DRAIN TUBE
To install, slide the drain tube over the frame nozzle at least 10 mm (0.4 in).

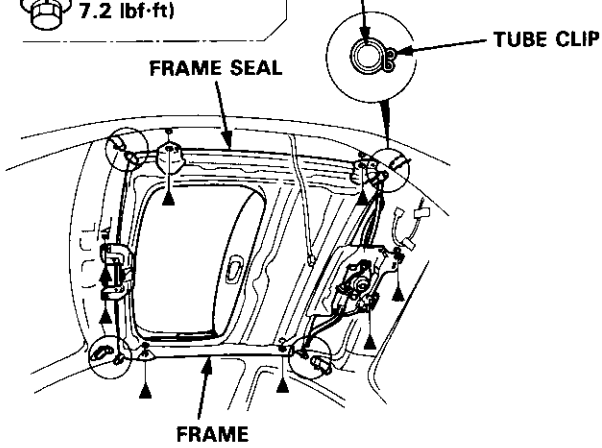

6. Pull the drain tubes out the front and rear pillars.

   NOTE: Before pulling out the drain tube, tie a string to the end of it so it can be reinstalled.

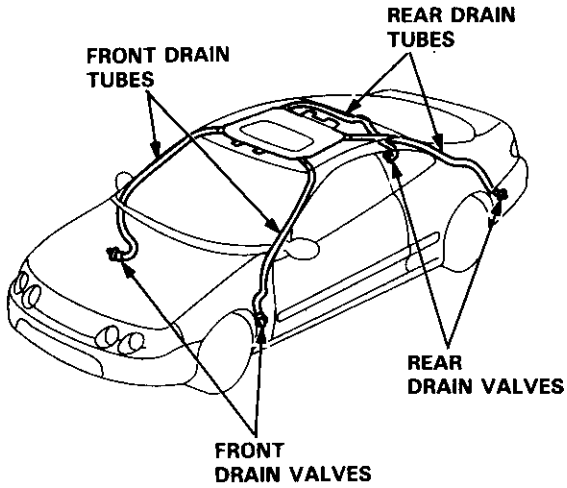

7. Installation is the reverse of the removal procedure.

   NOTE:
   - Clean the surface of the frame.
   - Check the frame seal.
   - Check for water leaks.

Glass Bracket/Slider, Lifter, Guide Rails and Cable Assembly Replacement

1. Remove the frame from the car (see page 20-80).
2. Remove the motor (see page 20-80).
3. Remove the drain channel.

   NOTE: Take care not to damage, twist or lift the seal.

▼ : Screw locations, 2

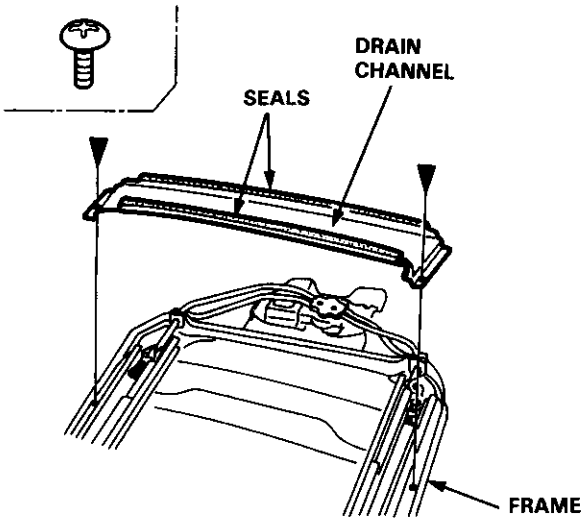

4. Remove the front drain channel on each side.

▽ : Clip locations, 2

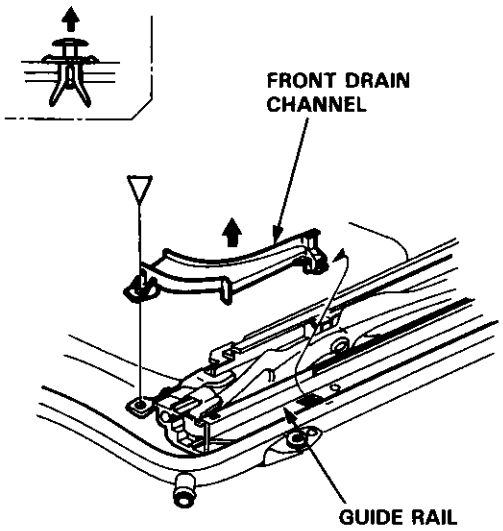

5. Remove the front rail holder on each side.

▼ : Nut, screw locations

A▼ : Nut, 2 — 6 x 1.0 mm, 9.8 N·m (1.0 kgf·m, 7.2 lbf·ft)

B▼ : Screw, 2

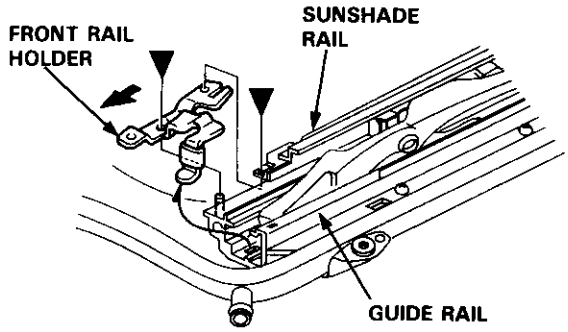

6. Remove the anchor spring on each side.
7. Remove the nuts and screws, then lift and remove both guide rails and cable assembly from the frame. Remove the sunshade and both sunshade rails.

▼ : Nut, screw locations

A▼ : Nut, 2 — 6 x 1.0 mm, 9.8 N·m (1.0 kgf·m, 7.2 lbf·ft)

B▼ : Screw, 4

NOTE: To install, fill the groove in each grommet with sealant.

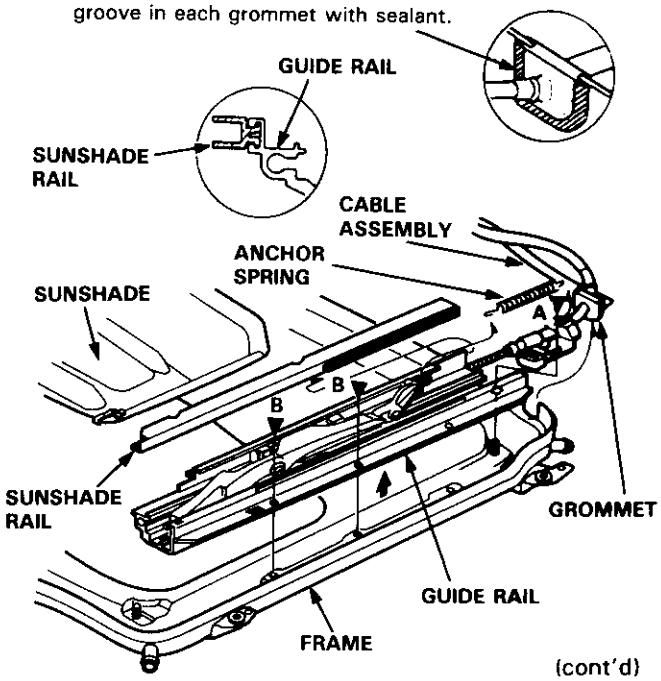

(cont'd)

Glass Bracket/Slider, Lifter, Guide Rails and Cable Assembly Replacement (cont'd)

8. Slide the guide rail forward, then remove it.

   NOTE: Take care not to bend the inner cable.

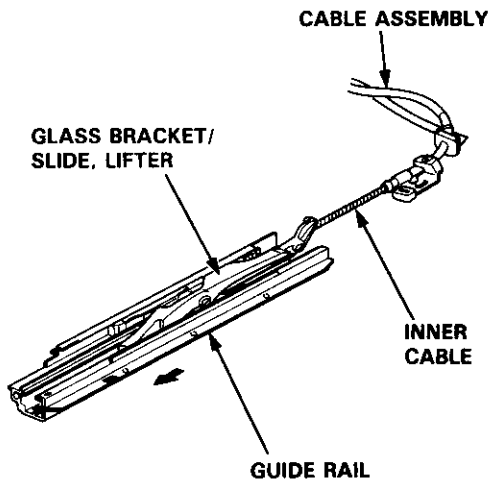

9. Separate the glass bracket, lifter, slide stopper link and slider.

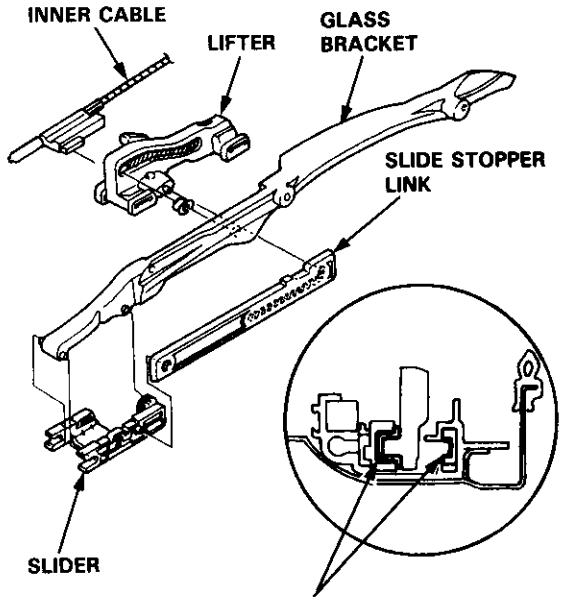

NOTE: To install, apply multipurpose grease to the lifter and slide stopper link.

10. Slide the anchor rod forward, then remove it from the guide rail.

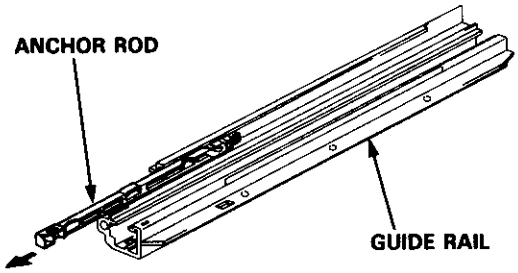

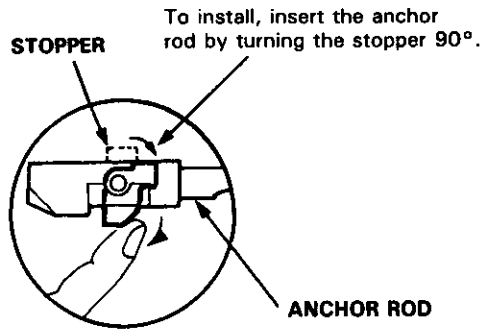

11. Installation is the reverse of the removal procedure.

    NOTE:
    - Damaged parts should be replaced.
    - Apply grease to the sliding portion.

Opening Drag Check (Motor Removed)

Before installing the motor, measure the effort required to open the glass using a spring scale as shown.

CAUTION: When using a spring scale, protect the leading edge of the glass with a shop towel.

If load is over 40 N (4 kgf, 9 lbf), check side clearance and glass height adjustment (see page 20-78).

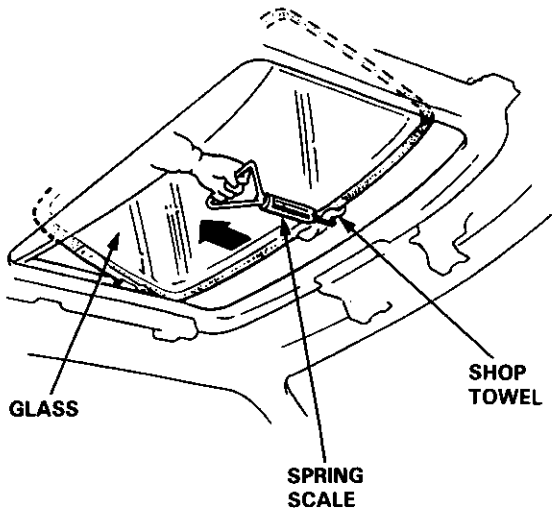

Closing Force Check (Motor Installed)

1. After installing all removed parts, have a helper hold the switch to close the glass while you measure force required to stop it. Attach a spring scale as shown. Read the force as soon as the glass stops moving, then immediately release the switch and spring scale.

   CAUTION: When using a spring scale, protect the leading edge of the glass with a shop towel.

   Closing Force: 200–290 N (20–30 kgf, 44–66 lbf)

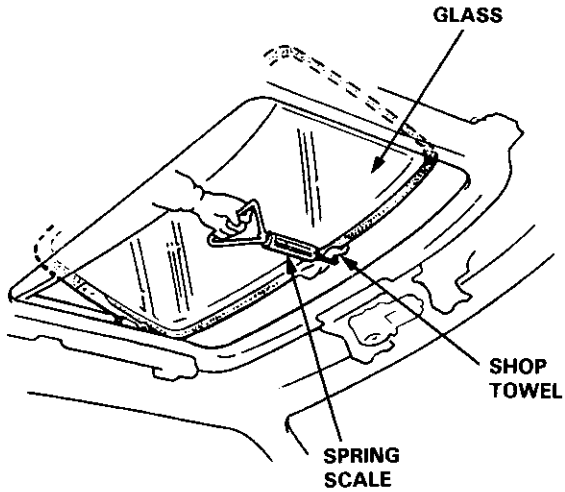

2. If the force is not within specification, install a new lock washer, adjust the tension by turning the motor clutch adjusting nut, and bend the lock washer against the motor clutch adjusting nut.

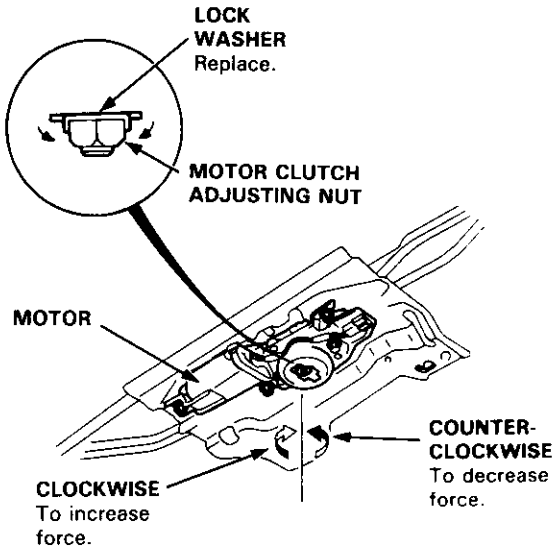

Index

Sedan

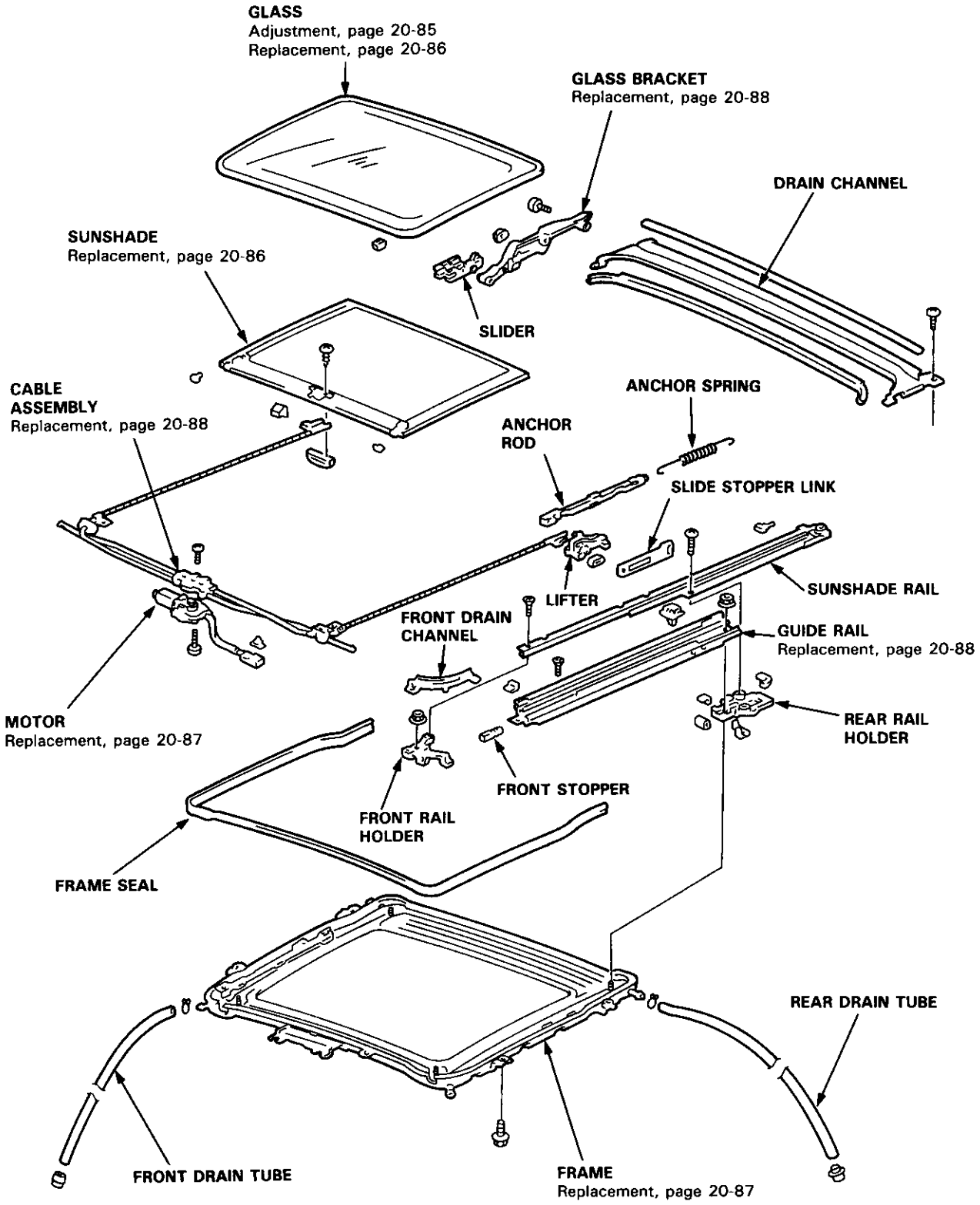
GLASS
Adjustment, page 20-85
Replacement, page 20-86
GLASS BRACKET
Replacement, page 20-88
DRAIN CHANNEL
SUNSHADE
Replacement, page 20-86
SLIDER
CABLE ASSEMBLY
Replacement, page 20-88
ANCHOR SPRING
ANCHOR ROD
SLIDE STOPPER LINK
SUNSHADE RAIL
LIFTER
FRONT DRAIN CHANNEL
GUIDE RAIL
Replacement, page 20-88
MOTOR
Replacement, page 20-87
REAR RAIL HOLDER
FRONT STOPPER
FRONT RAIL HOLDER
FRAME SEAL
REAR DRAIN TUBE
FRONT DRAIN TUBE
FRAME
Replacement, page 20-87

Troubleshooting

Symptom	Probable Cause
Water leaks	1. Clogged drain tube. 2. Gap between glass weatherstrip and roof panel. 3. Defective or improperly installed glass weatherstrip. 4. Gap between drain seal and roof panel.
Wind noise	1. Excessive clearance between glass weatherstrip and roof panel.
Motor noise	1. Loose motor. 2. Worn gear or bearing. 3. Cable assembly deformed.
Glass does not move, but motor turns	1. Clutch out of adjustment. 2. Foreign matter stuck between guide rail and slider. 3. Inner cable loose. 4. Cable assembly not attached properly.
Glass does not move and motor does not turn (glass can be moved with moonroof wrench)	1. Blown fuse. 2. Faulty switch. 3. Battery run down. 4. Defective motor. 5. Faulty relay.

Glass Height Adjustment

The roof panel should be even with the glass weatherstrip, to within 1.8 ±0.5 mm (0.07 ±0.02 in) all the way around. If not, slide the sunshade back, and:

1. Tilt-up the glass.
2. Loosen the bolts and adjust the glass.
3. Repeat on opposite side if necessary.

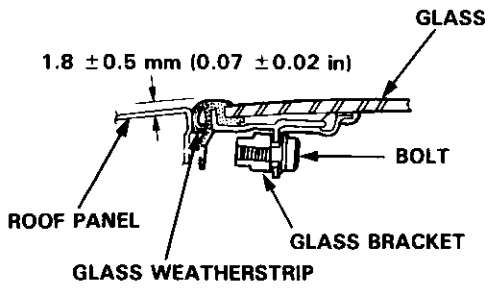

4. Side-to-side fit of glass weatherstrip can be adjusted by loosening the frame mounting bolts and moving the frame right or left and forward or backward by hand (see page 20-87).

▼: Bolt locations, 6

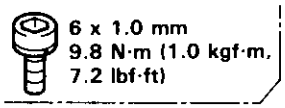

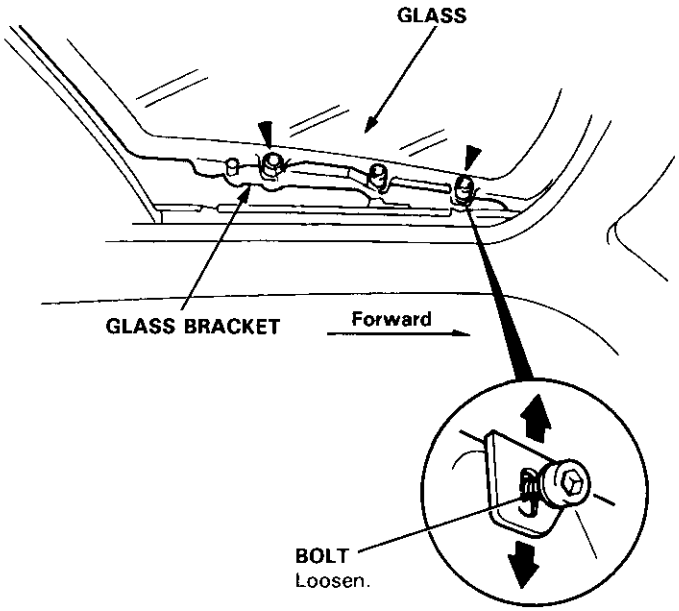

Rear Edge Closing Adjustment

Open the glass about a foot, then close it to check where rear edge begins to rise. If it rises too soon and seats too tightly against the roof panel, or too late and does not seat tightly enough, adjust it.

1. Remove the headliner (see page 20-100).
2. Remove the glass.
3. Remove the motor (see page 20-87).
4. Align the tilt-up position of the lifter on each side.

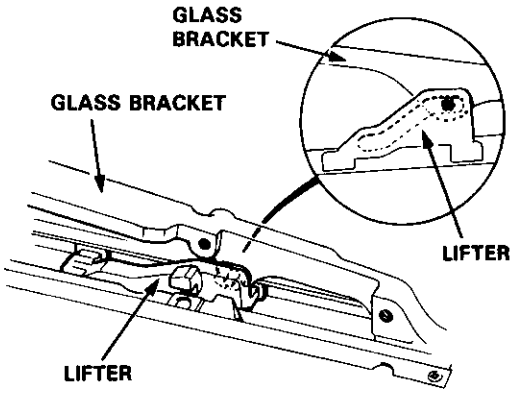

5. Check that the alignment left and right, then install the motor.
6. Install the glass, then check for water leaks.

   NOTE: Do not use high pressure water.
7. Install the headliner.

Glass and Sunshade Replacement

1. Open the sunshade.
2. Tilt-up the glass.
3. Remove the bolts, then remove the glass from the glass bracket.

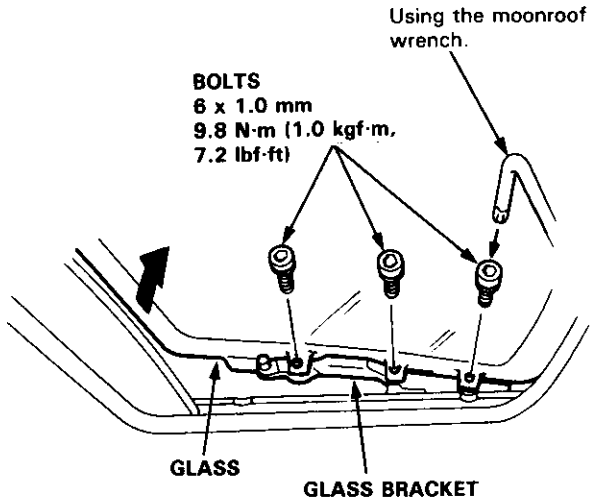

4. Remove the screws and lift the sunshade rails.
5. Silde the sunshade forward, then remove the sunshade.

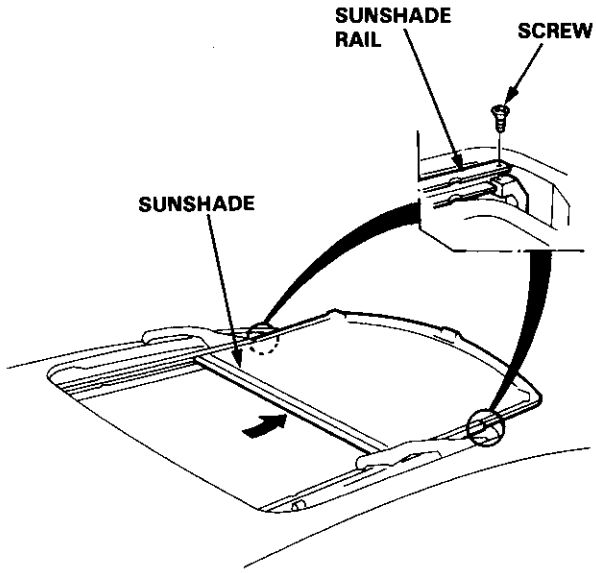

6. Installation is the reverse of the removal procedure.
7. Check for water leaks.

   NOTE: Do not use high pressure water.

Motor, Drain Tube and Frame Replacement

CAUTION: Be careful not to damage the seats, dashboard and other interior trim.

1. Remove the glass (see page 20-86) and headliner (see page 20-100).

2. Disconnect the motor connector, and remove the clips securing the ceiling light wire harness.

   NOTE: To remove the motor, remove the screws.

3. Disconnect the drain tubes.

4. Loosen the front bolts.

5. Remove the bolts, then remove the frame from the car.

   NOTE:
   - You may require assistance when removing the frame.
   - Take care not to bend the sunshade rails.

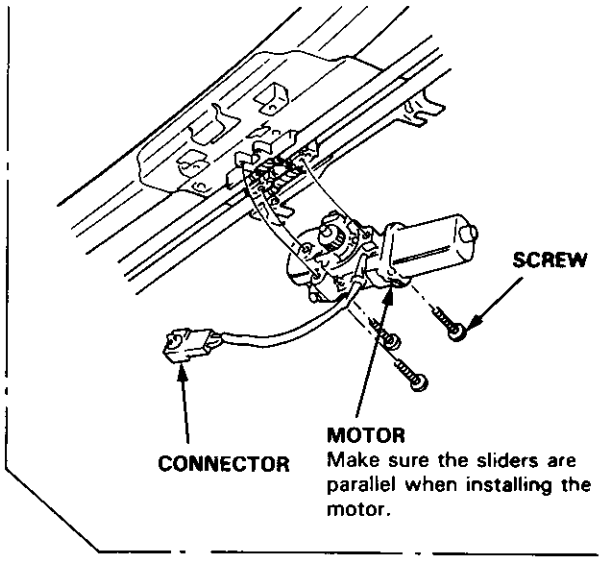

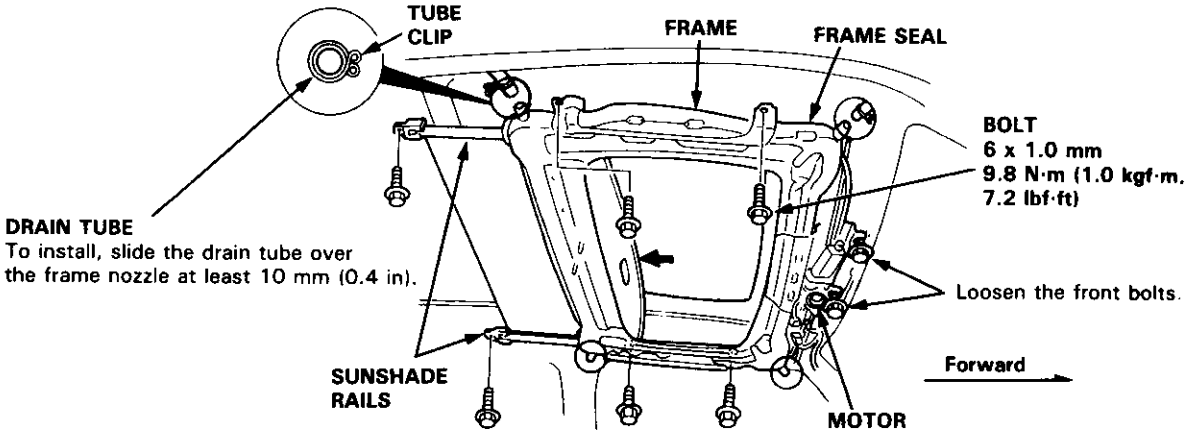

6. Pull the drain tubes out of the front and rear pillars.

   NOTE: Before pulling out the drain tube, tie a string to the end of it so it can be reinstalled.

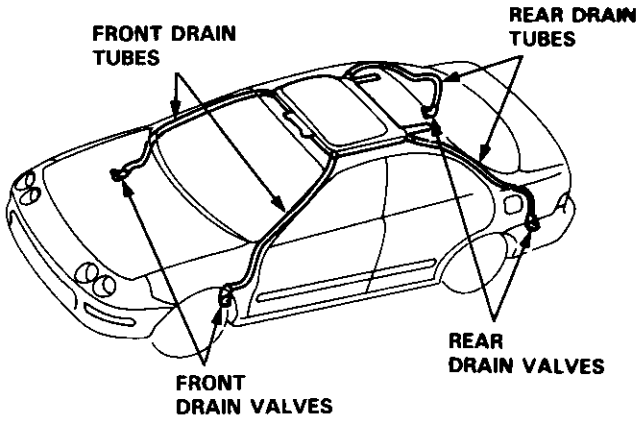

7. Installation is the reverse of the removal procedure.

   NOTE:
   - Install the tube clips with the ends facing the side to ease installation of the headliner.
   - Clean the surface of the frame.
   - Check the frame seal.
   - Check for water leaks.
   - Make sure the sunshade moves smoothly.

Glass Bracket/Slider, Lifter, Guide Rails and Cable Assembly Replacement

1. Remove the frame (see page 20-87).
2. Remove the drain channel.

   NOTE: Take care not to damage, twist or lift the seal.

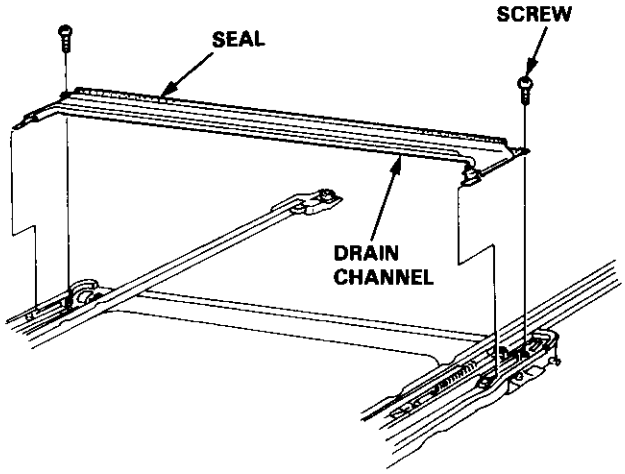

3. Remove the screws, then remove the sunshade rail by sliding it backward.

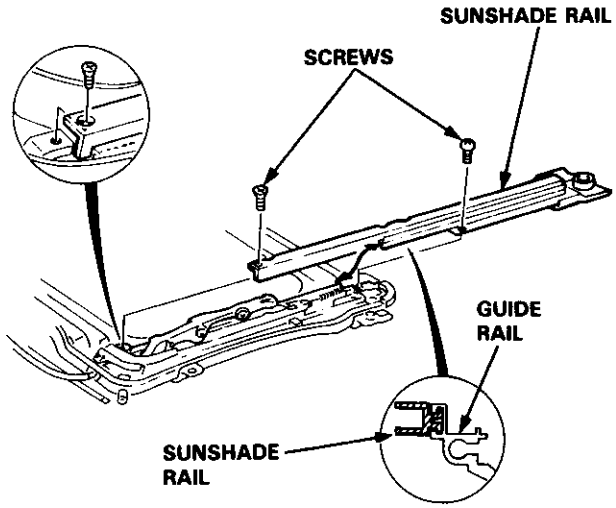

4. Remove the motor (see page 20-87).
5. Remove the front drain channel.
6. Remove the nut, then remove the front rail holder.
7. Remove the screws (A) attaching the guide rail, then lift the guide rail.
8. Remove the nut, then remove the rear rail holder.

   NOTE: Remove the anchor spring.

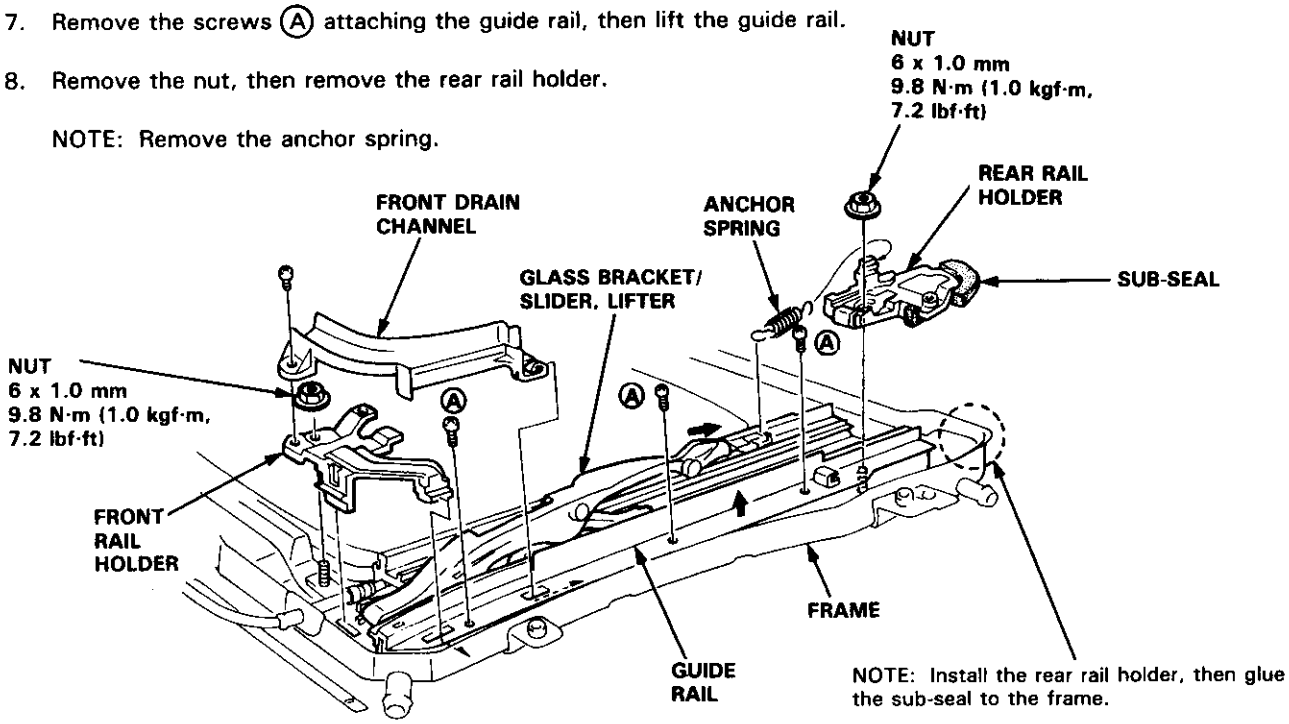

9. Slide the glass bracket/slider, lifter backward, then remove it.

10. Separate the glass bracket, lifter, slide stopper link and slider.

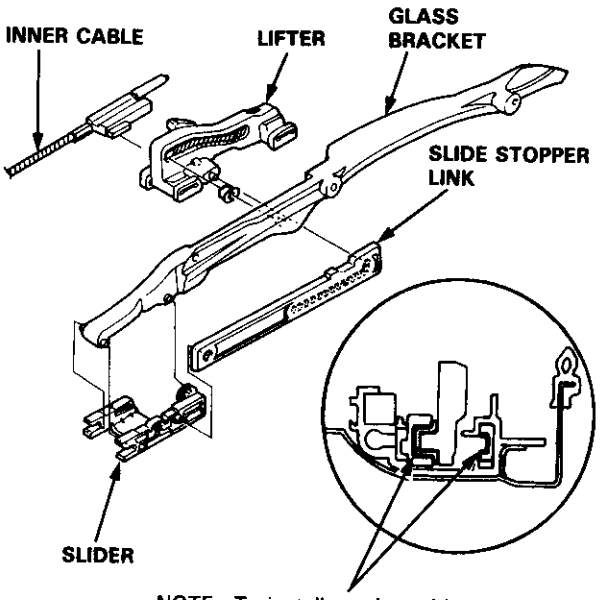

NOTE: To install, apply multipurpose grease to the lifter and slide stopper link.

11. Slide the anchor rod forward, then remove it from the guide rail.

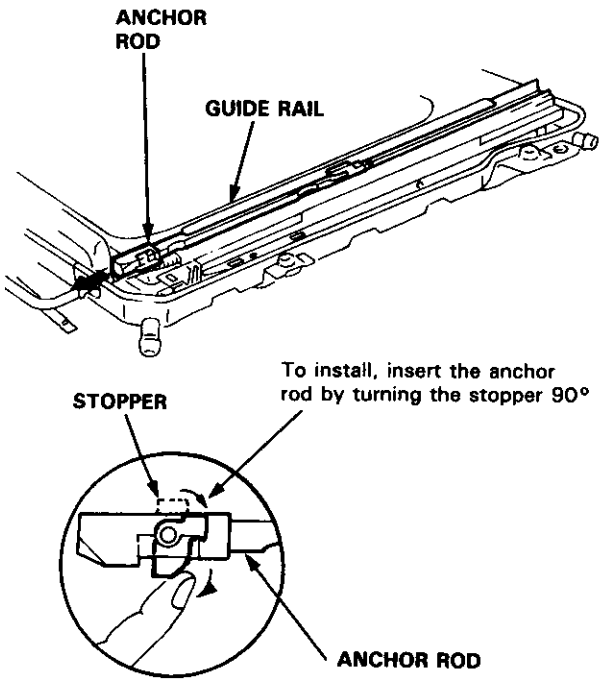

12. Slide the guide rail backward, then remove the guide rail from the inner cable.

NOTE: To install, apply the caulking to guide rail mount faces of the frame.

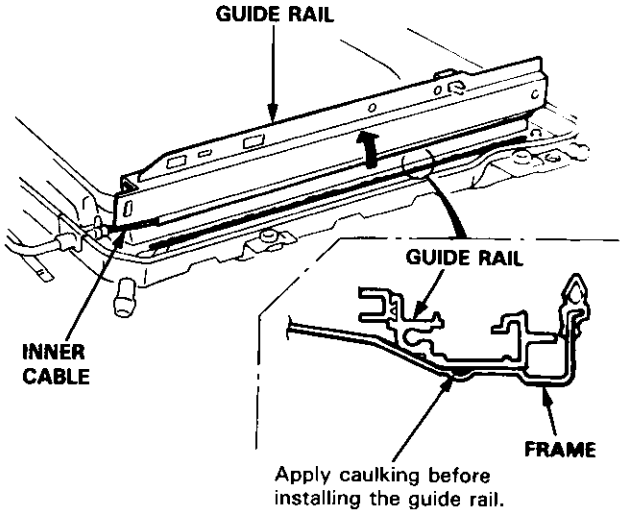

13. Remove the screws, then remove the cable assembly from the frame.

NOTE: Take care not to bend the cable pipes.

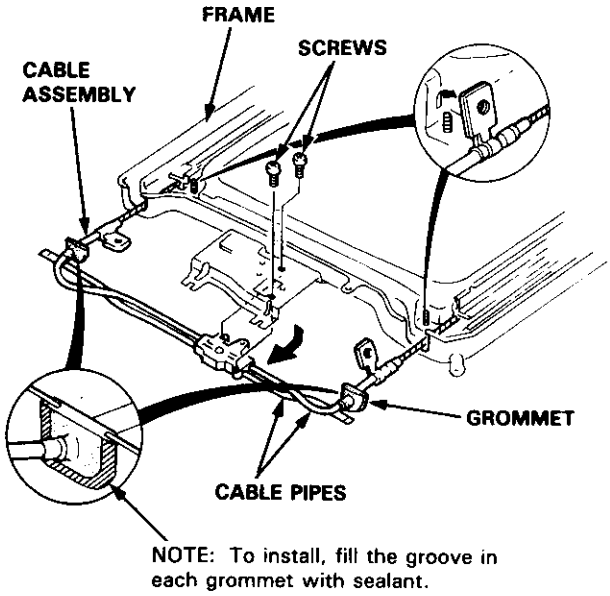

14. Installation is the reverse of the removal procedure.

NOTE:
- Damaged parts should be replaced.
- Apply grease to the sliding portion.

Opening Drag Check (Motor Removed)

Before installing the motor, measure the effort required to open the glass using a spring scale as shown.

CAUTION: When using a spring scale, protect the leading edge of the glass with a shop towel.

If load is over 40 N (4 kgf, 9 lbf), check side clearance and glass height adjustment (see page 20-85).

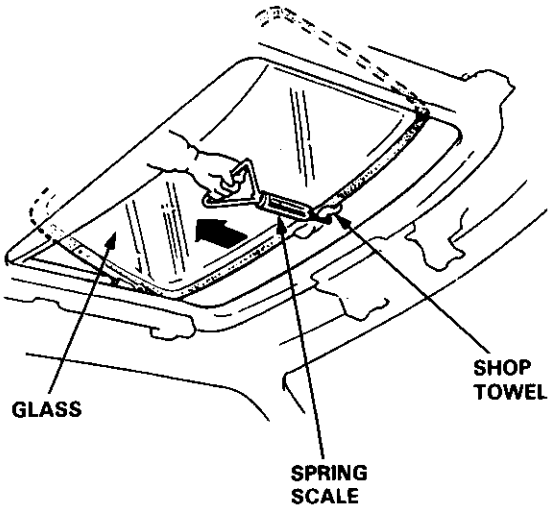

Closing Force Check (Motor Installed)

1. After installing all removed parts, have a helper hold the switch to close the glass while you measure force required to stop it. Attach a spring scale as shown. Read the force as soon as the glass stops moving, then immediately release the switch and spring scale.

   CAUTION: When using a spring scale, protect the leading edge of the glass with a shop towel.

   Closing Force: 200–290 N (20–30 kgf, 44–66 lbf)

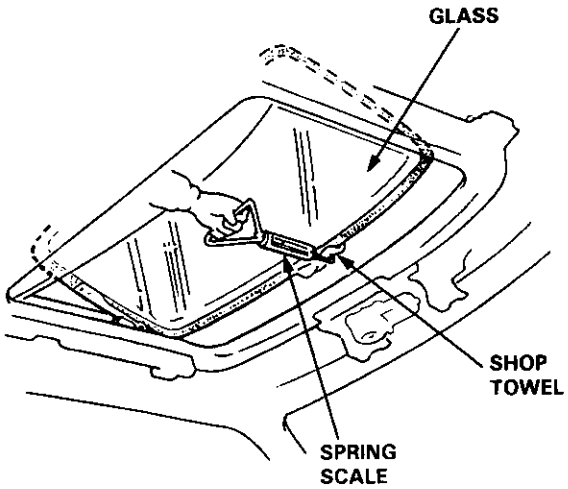

2. If the force is not within specification, install a new lock washer, adjust the tension by turning the motor clutch adjusting nut, and bend the lock washer against the motor clutch adjusting nut.

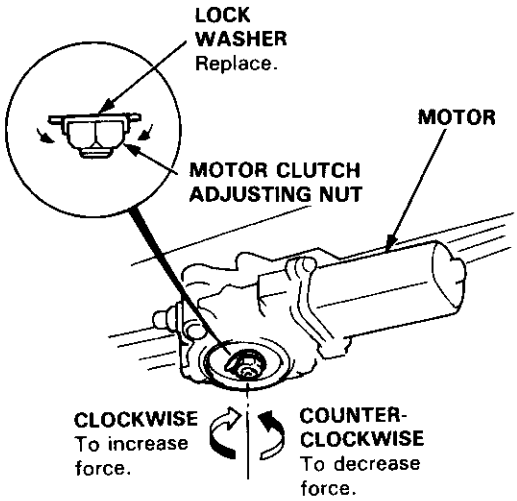

Replacement

CAUTION:
- **Wear gloves to remove and install the trim and panels.**
- ***When prying with a flat tip screwdriver, wrap it with protective tape to prevent damage.***

NOTE: Take care not to bend or scratch the trim and panels.

Kick panel/Front pillar trim removal:

1. Remove the kick panel.

◁ : **Clip locations**

A◁: Clip, 1 **B◁: Clip, 1** **C▽: Clip, 1**

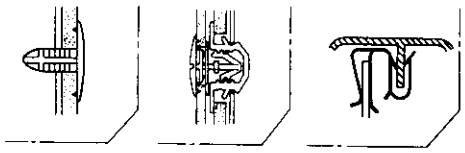

NOTE: Remove the driver's kick panel while pulling the hood release handle.

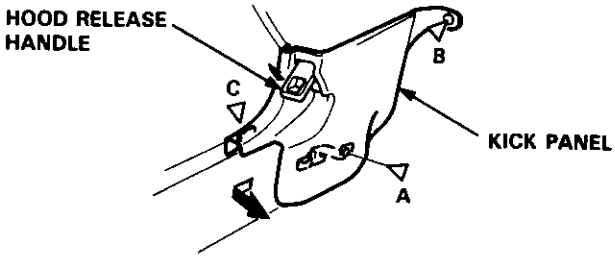

2. Pull the door trim back, then remove the front pillar trim.

◁ : **Clip locations, 4**

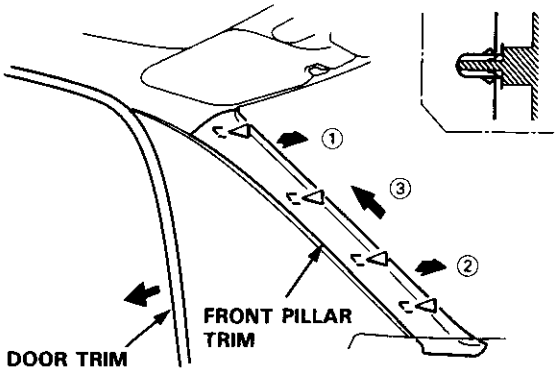

3. Installation is the reverse of the removal procedure.

NOTE: If necessary, replace any damaged clips.

Hatchback

Rear trim panel/Side trim panel/Quarter pillar trim panel removal:

1. Open the hatch.
2. Remove the rear shelf.

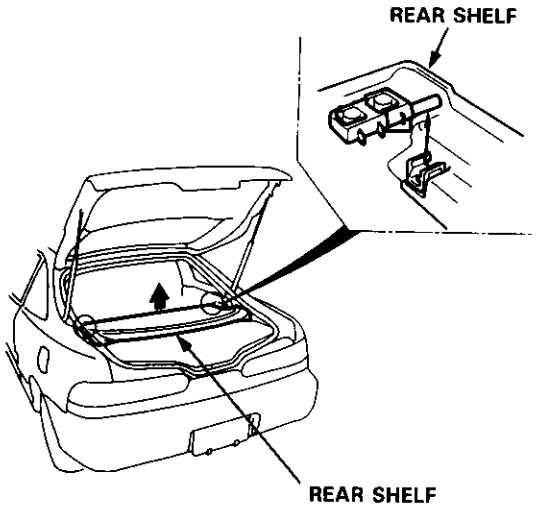

3. Remove the rear seat (see page 20-108).
4. Remove the trunk mat and spare tire lid.

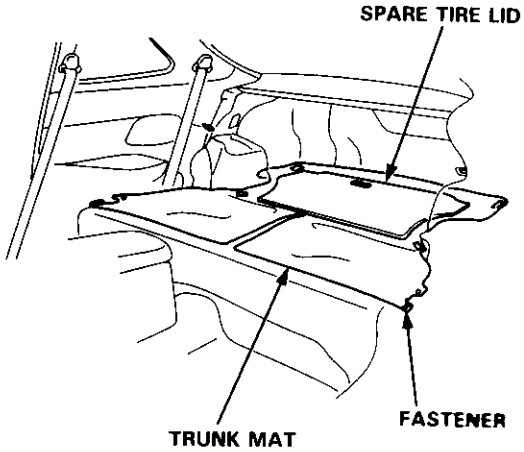

cont d)

Replacement (cont'd)

5. Remove the rear trim panel.

▽ : Clip locations, 7

—1) Push the inner clip.
NOTE: Do not push it in too far.

—2) Detach the clip by pulling it.

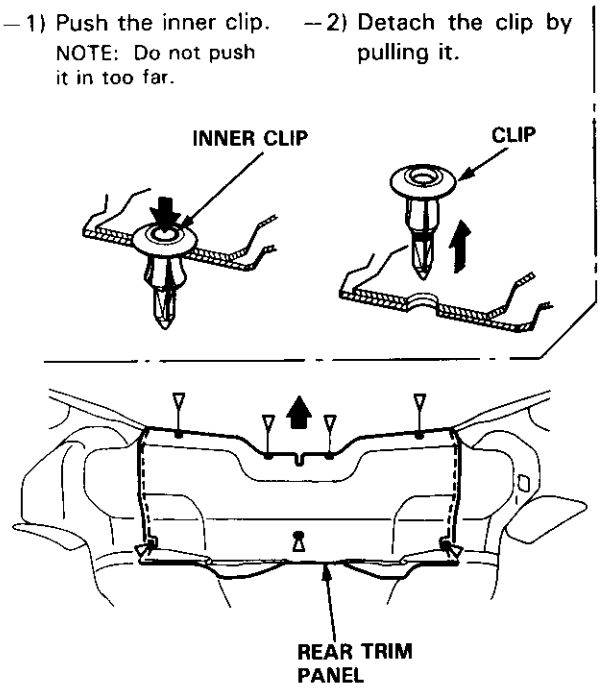

6. Remove the speaker lid and left access panel from the side trim panel.

▷ : Clip locations

A▷ : Clip, 2 B▽ : Clip, 2

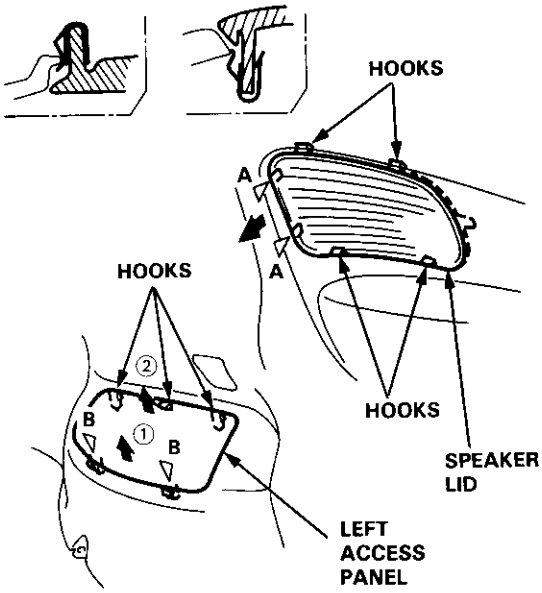

7. Remove the side trim panel.

▷ : Clip locations

A▷ : Clip, 4 B▷ : Clip, 4

C▷ : Clip, 3 D▽ : Clip, 1

▶ : Bolt, screw locations

A▶ : Bolt, 2 B▶ : Screw, 2

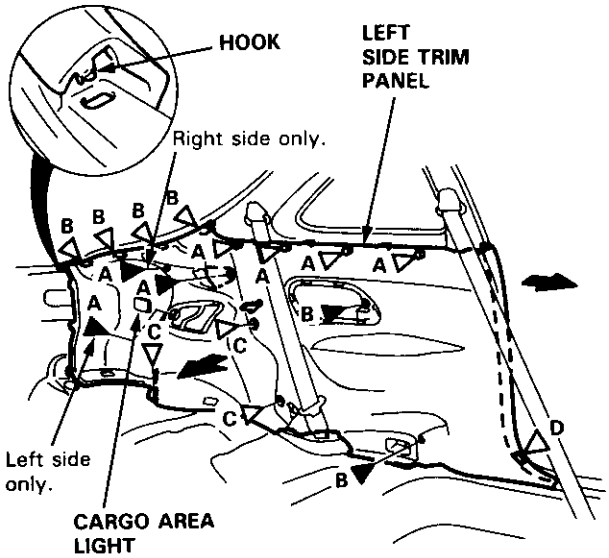

NOTE: Disconnect the cargo area light connector from the left side trim panel.

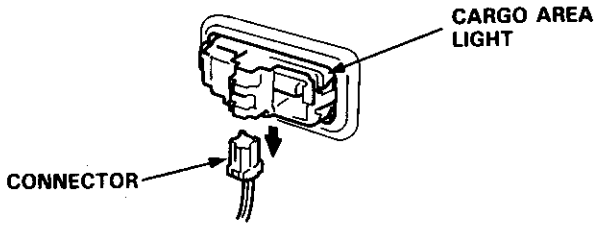

8. Remove the upper anchor bolts from the front and rear seat belts (see pages 20-115, 119).

9. Remove the door trim.

NOTE: When installing the door trim, align it with the door opening flange notch.

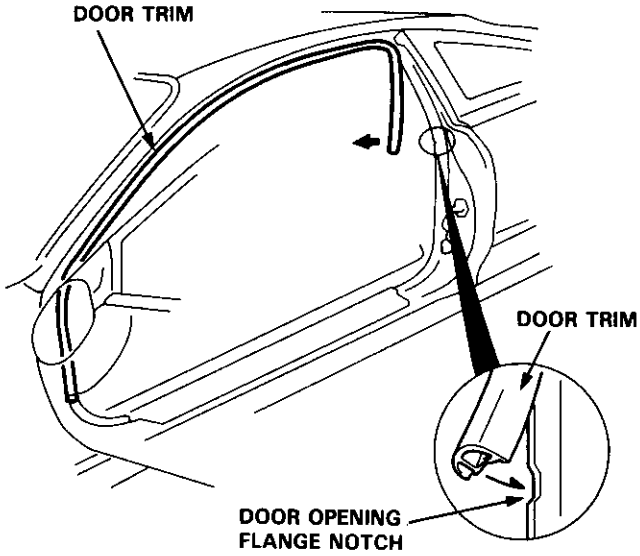

10. Remove the quarter trim and coat hanger (left side).

▲ : Screw locations, 1

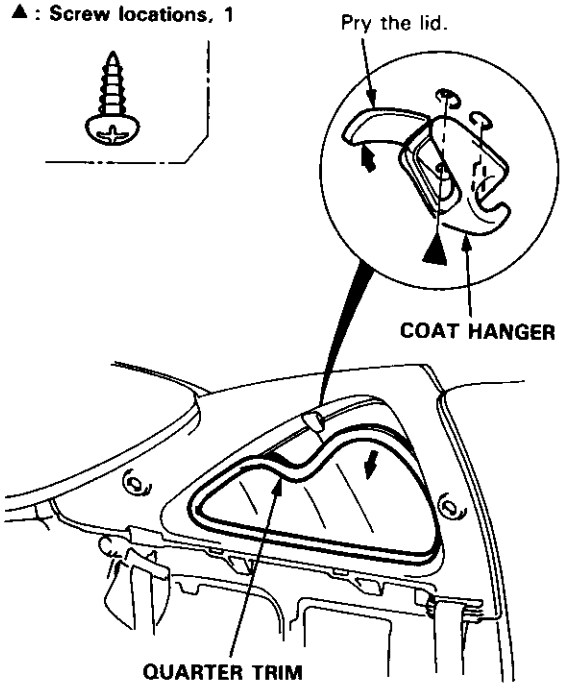

11. Remove the quarter pillar trim panel.

▷ : Clip locations

A▷ : Clip, 7

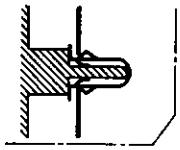

B▷ : Clip, 3

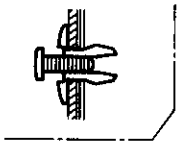

NOTE: Remove the front seat belt from the belt guide.

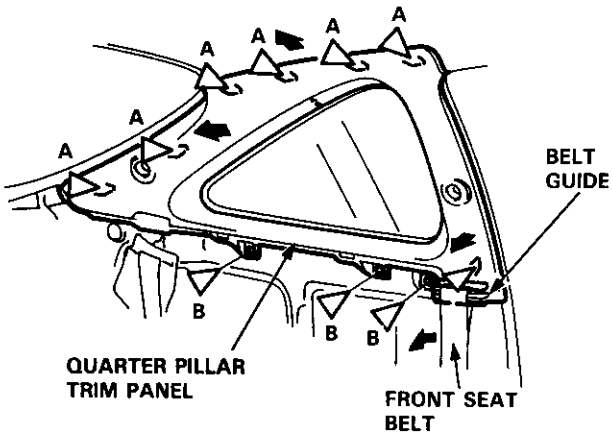

12. Installation is the reverse of the removal procedure.

NOTE:
- If necessary, replace any damaged clips.
- When installing the side trim panel, make sure there are no twists or kinks in the front and rear seat belts.
- When installing the rear trim panel, install the clip as follows.

—1) Pull the inner clip up as shown.

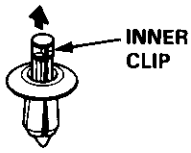

—2) Install the clip in the rear trim panel, then push the inner clip until it's flush.

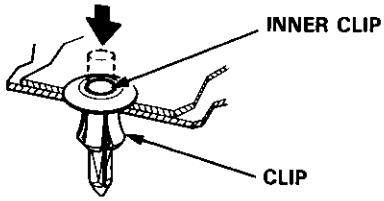

(cont'd)

Replacement (cont'd)

Sedan

Center pillar lower trim/Center pillar trim removal:

1. Remove the belt hole cap, then slip the front seat belt through the slit in the belt hole cap.

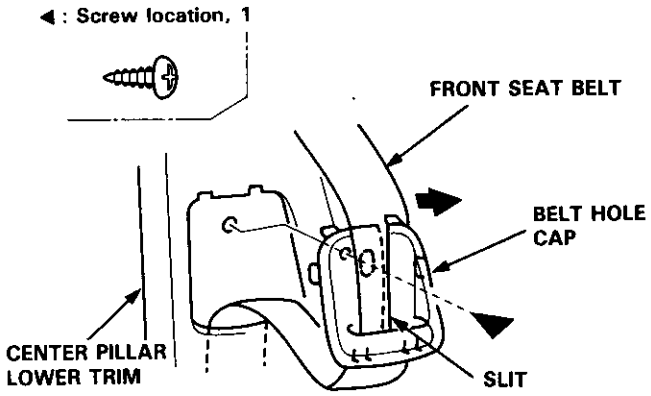

2. Remove the upper and lower anchor bolts from the front seat belt, then remove the center pillar lower tirm.

   NOTE:
   - When removing the anchor bolts, use a 17 mm socket or box-end wrench.
   - On reassembly, replace the upper anchor bolt (*) and use liquid thread lock.

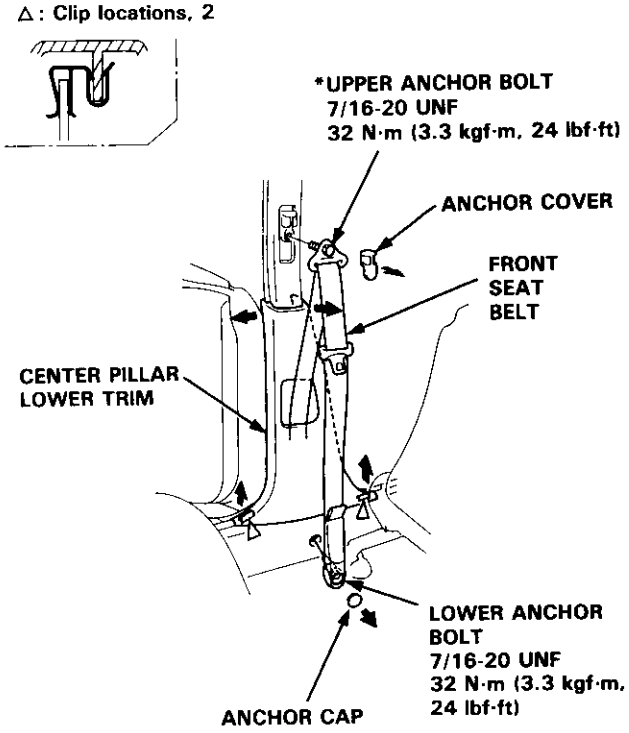

3. Remove the front and rear door trim.

   NOTE: When installing the front and rear door trim, align them with the door opening flange notch.

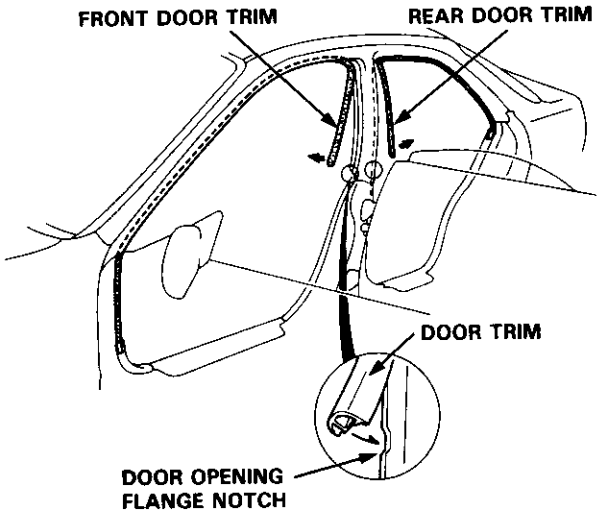

4. Remove the center pillar trim.

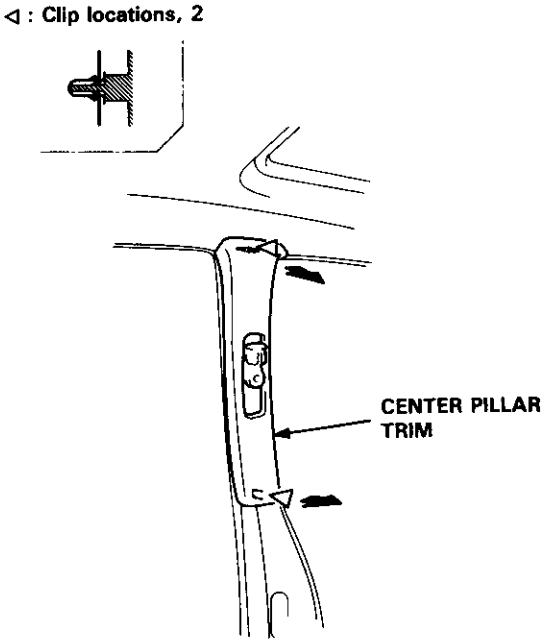

5. Installation is the reverse of the removal procedure.

   NOTE:
   - If necessary, replace any damaged clips.
   - Before attaching the center pillar lower trim and belt hole cap, make sure there are no twists or kinks in the front seat belt.

Rear pillar trim panel/Rear shelf trim panel/Rear shelf removal:

1. Remove both seat-back side bolsters (see page 20-111).

2. Remove the upper portion of the rear door sill molding, then pull the rear door trim away on each side.

▷ : **Clip locations, 2**

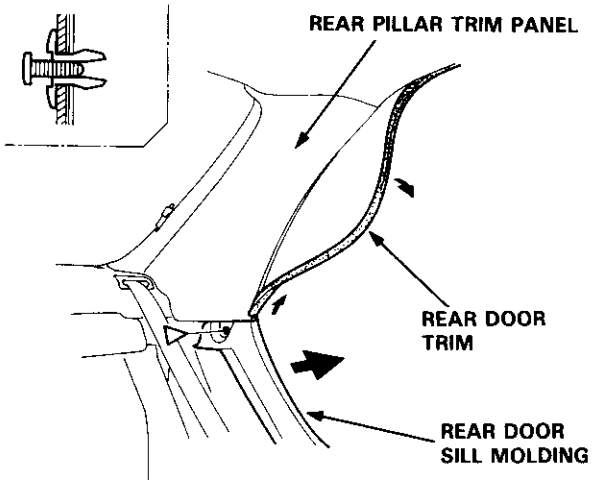

3. Remove both rear pillar trim panels.

▷ : **Clip locations, 12**

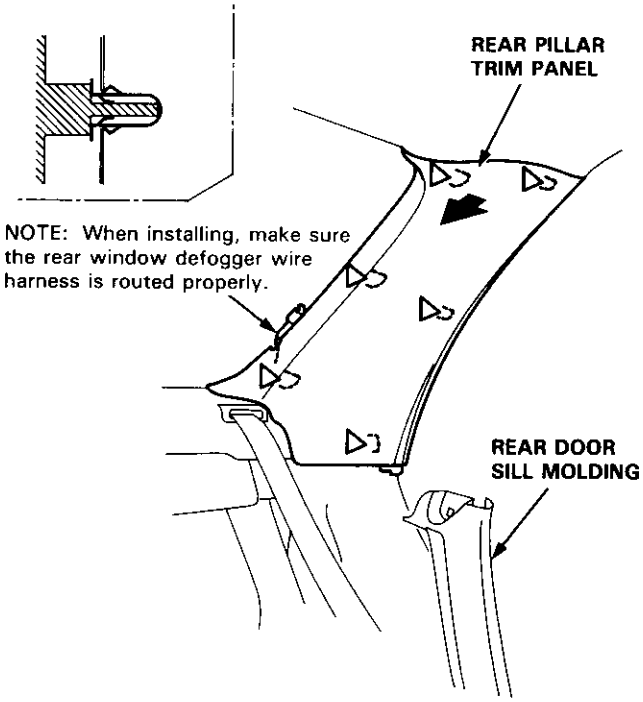

4. Remove the rear shelf trim panel.

▽ : **Clip locations, 2**

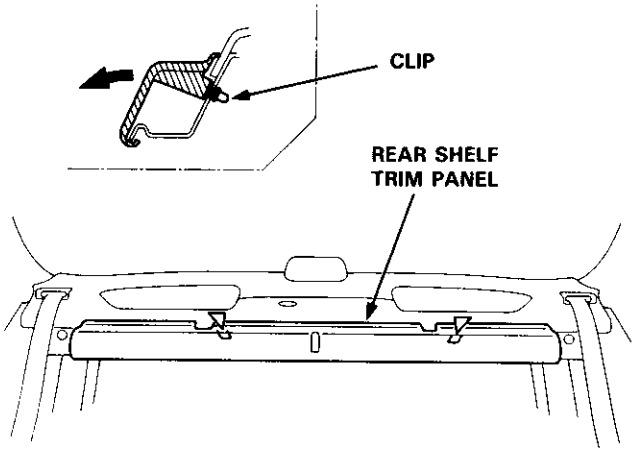

5. Slip the rear seat belt through the slit in the rear shelf.

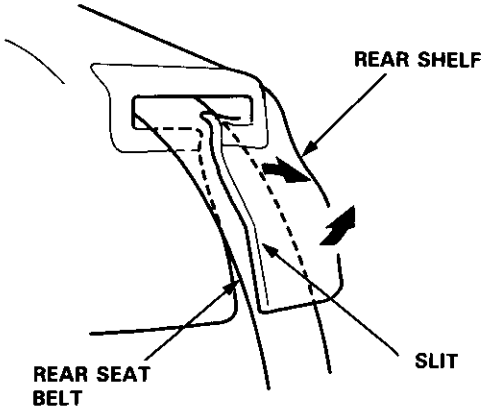

6. Remove the seat lock cover (see page 20-111) and high mount brake light (see section 23).

(cont'd)

Replacement (cont'd)

7. Remove the rear shelf.

▽ : Clip locations

A▽ : Clip, 4

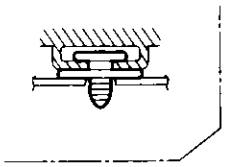

B▽ : Clip, 2

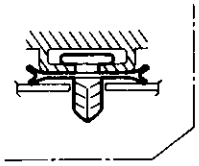

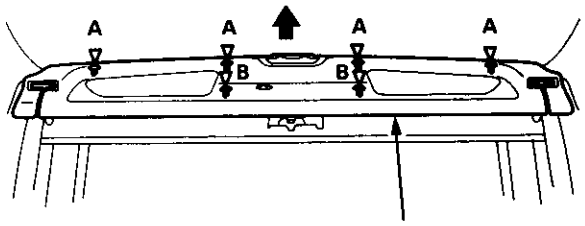

REAR SHELF

8. If necessary, remove the belt hole cap and speaker cover from the rear shelf.

▲ : Screw locations, 3

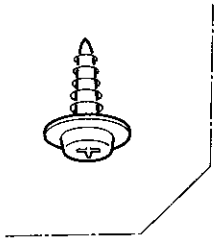

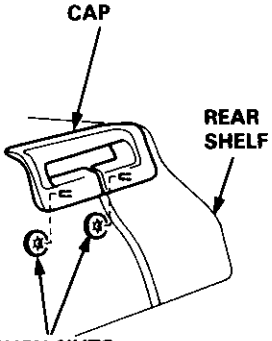

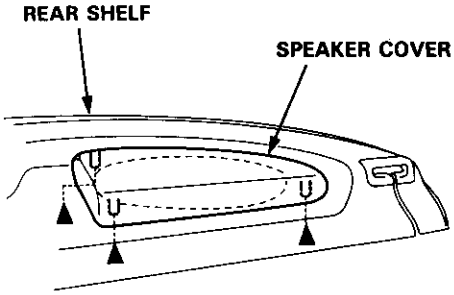

9. Installation is the reverse of the removal procedure.

NOTE:
- If necessary, replace any damaged clips.
- When installing the rear shelf, make sure there are no twists or kinks in the rear seat belt.

Trunk Trim

Replacement

NOTE: Take care not to bend or scratch the panels.

1. Fold the rear seat-back forward.

2. Lift the trunk mat, then remove the spare tire lid.

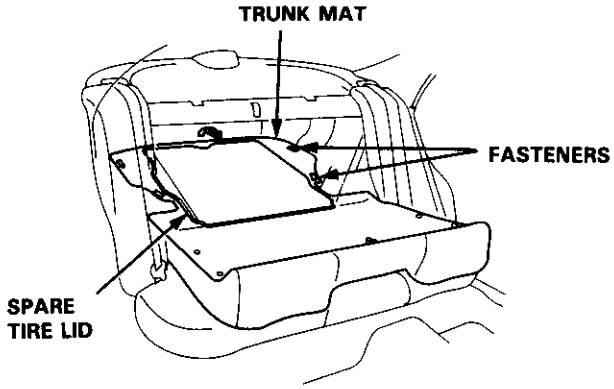

3. Remove the clips, then remove the rear trim panel.

▽ : **Clip locations**

A▽ : Clip, 4

—1) Push the inner clip.
NOTE: Do not push it in too far.

—2) Detach the clip by pulling it.

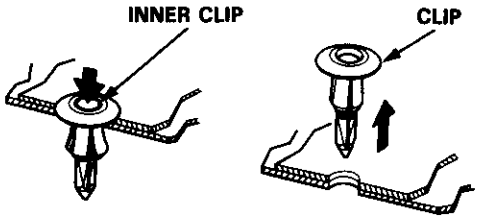

B▽ : Clip, 2

—1) Loosen the inner clip.

—2) Detach the clip by pulling it.

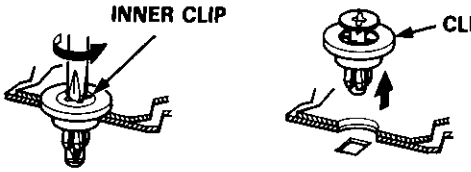

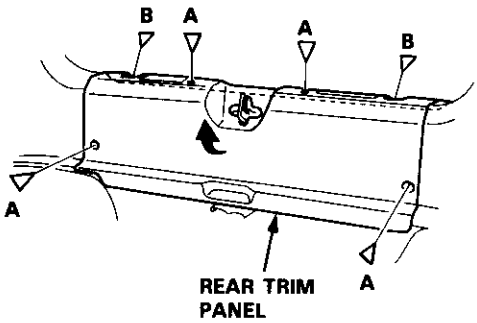

4. Remove the clips, then remove the trunk side panel on each side.

NOTE: A clips on the trunk side panel can be removed in the same way as those on the rear trim panel.

◁ : **Clip locations**

A◁ : Clip, 6
B▽ : Clip, 4

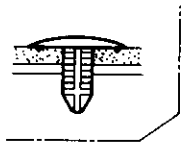

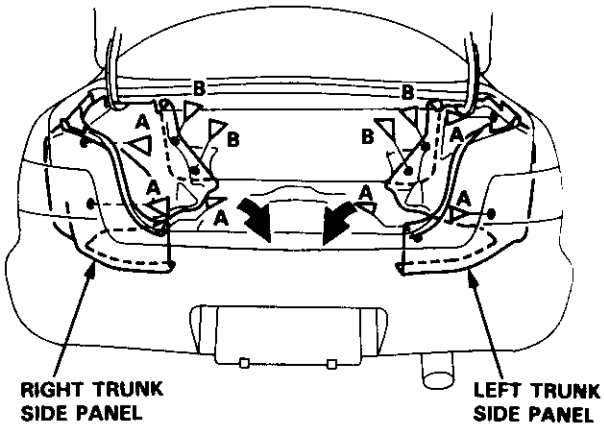

5. Installation is the reverse of the removal procedure.

NOTE:
- If necessary, replace any damaged clips.
- When installing the rear trim panel, install the A clip as follows.

—1) Pull the inner clip up as shown.

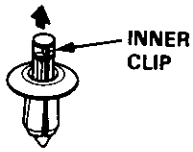

—2) Install the clip in the rear trim panel, then push the inner clip until it's flush.

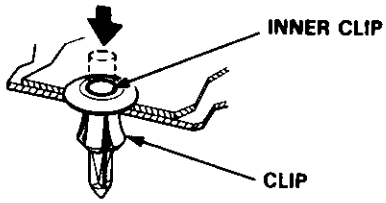

Replacement

CAUTION: When prying with a flat tip screwdriver, wrap it with protective tape to prevent damage.

NOTE:
- Take care not to bend and scratch the headliner.
- Be careful not to damage the dashboard and other interior trim.
- Fold the front seat-back backward.

Hatchback

1. Remove:
   - Door trim (see page 20-93)
   - Front pillar tirm (see page 20-91)
   - Quarter trim (see page 20-93)
   - Coat hanger (see page 20-93)
   - Rearview mirror (see page 20-52)

2. Remove the sunvisor and holder from each side.

▲ : Screw locations, 6

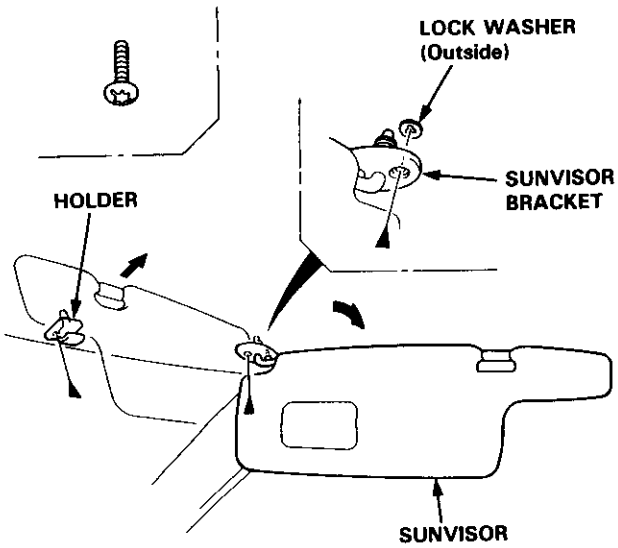

NOTE:
- If necessary, remove the sunvisor bracket as shown.
- When installing the sunvisor bracket, apply grease and make sure it's installed properly.

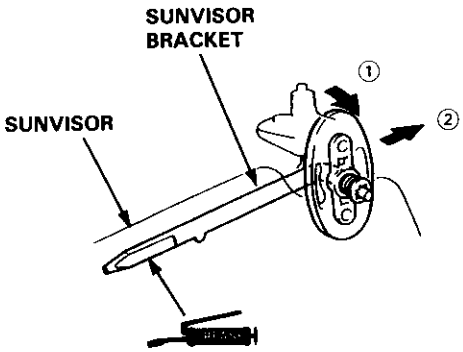

3. Remove the front and rear ceiling lights, then disconnect the connectors.

▲ : Screw, nut locations

A▲ : Screw, 2 **B▲ : Nut, 2**

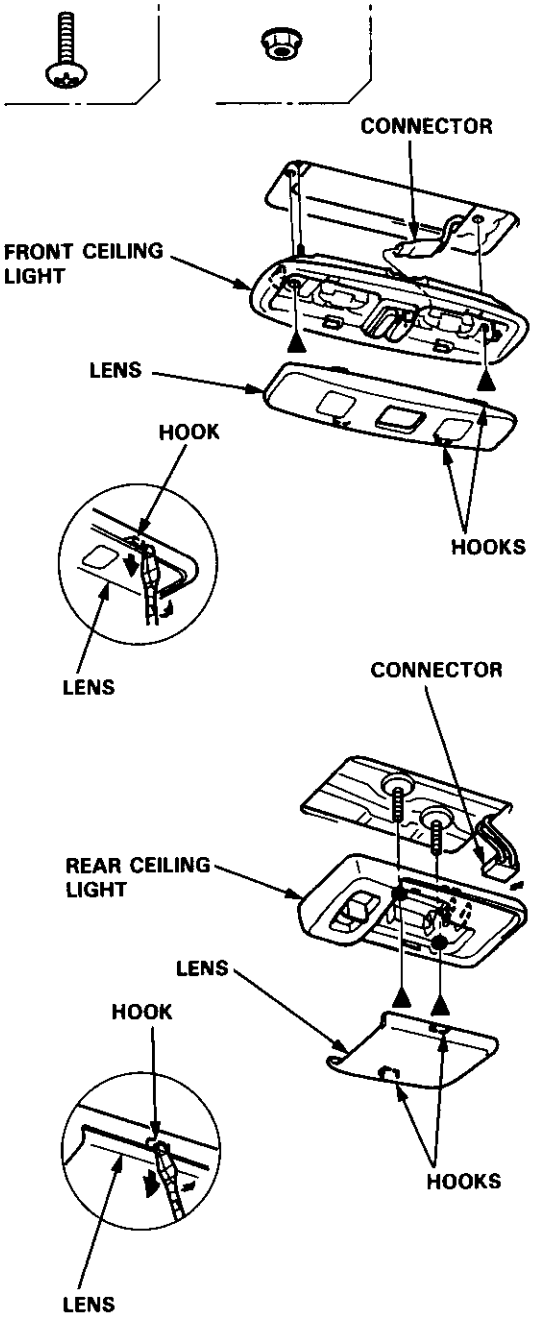

4. Remove the grab handle (front passenger's) and grab hole caps (driver's).

▲: Screw locations (2)

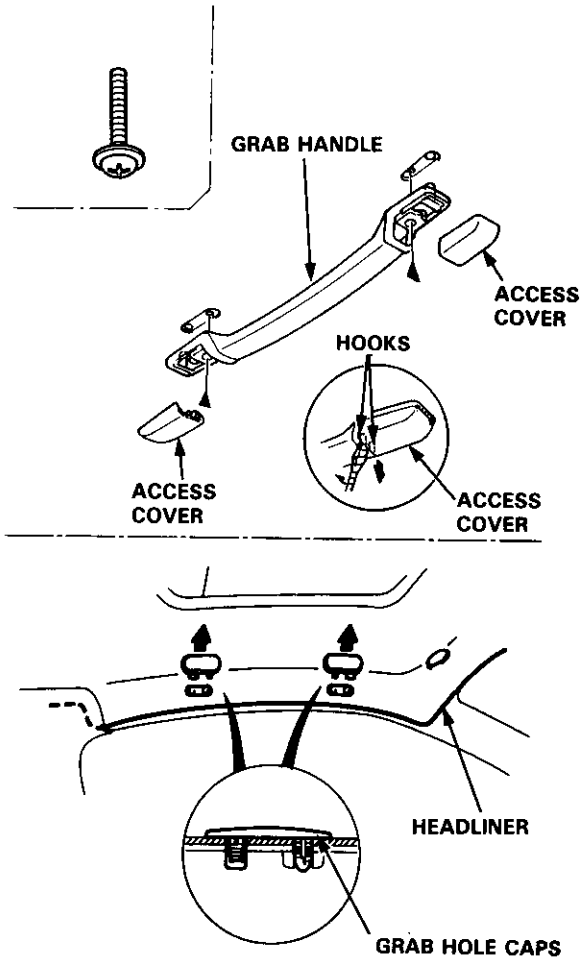

5. Remove the socket plug (moonroof model).

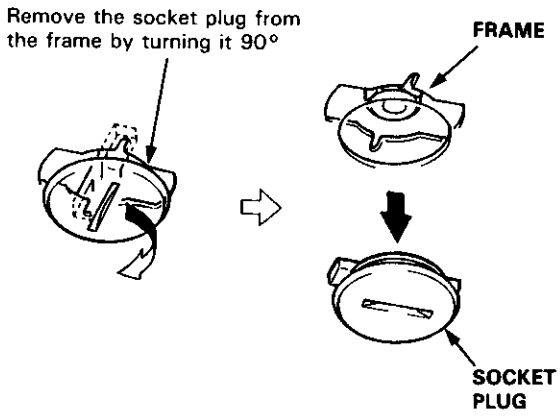

6. Remove the upper anchor bolts from the front and rear seat belts (see pages 20-115, 119).

7. Remove the upper portion of the quarter pillar trim panel, then detach the headliner clip on each side.

△ : Clip locations, 2

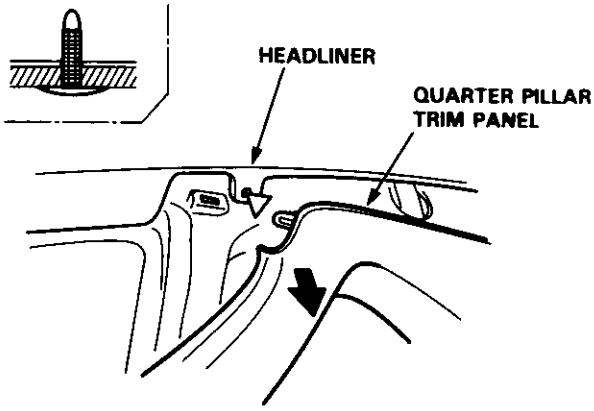

8. Remove the roof trim (moonroof model).
Open the hatch, then remove the rear roof trim.
Remove the headliner.

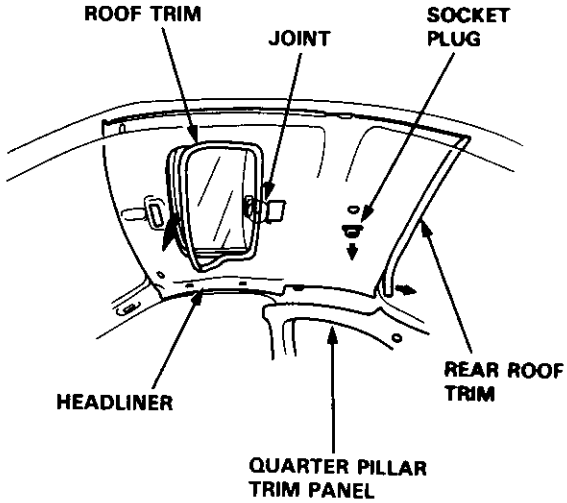

(cont'd)

Replacement (cont'd)

9. Lower the headliner as shown.

   NOTE: Take care not to bend and scratch the headliner.

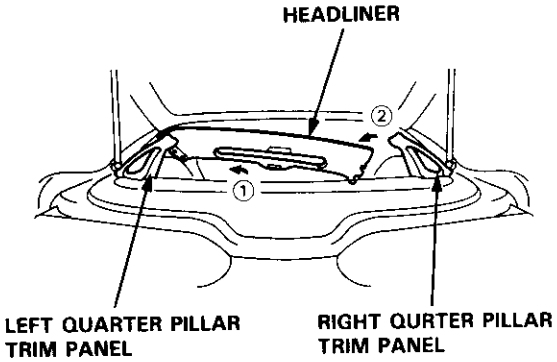

10. Remove the headliner through the hatch opening.

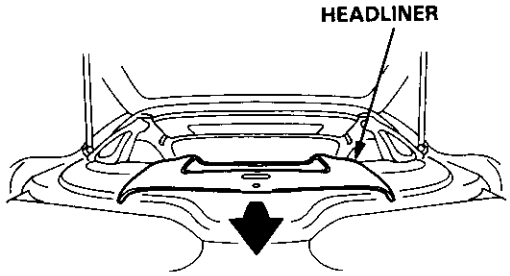

11. Installation is the reverse of the removal procedure.

    NOTE:
    - When inserting the headliner through the hatch opening, be careful not to fold or bend it. Also, be careful not to scratch the body.
    - Check that both sides of the headliner are securely attached to the trim and panels.
    - When installing the roof trim, install the joint toward the rear.

Sedan

1. Remove:
   - Center pillar lower trim (see page 20-94)
   - Front and rear door trim (see page 20-94)
   - Front pillar trim (see page 20-91)
   - Center pillar trim (see page 20-94)
   - Rear pillar trim panel (see page 20-95)
   - Rearview mirror (see page 20-52)

2. Remove the sunvisor and holder from each side.

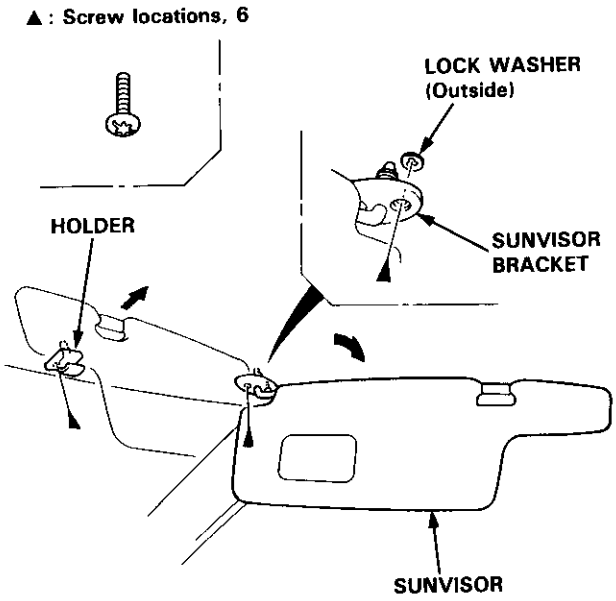

NOTE:
- If necessary, remove the sunvisor bracket as shown.
- When installing the sunvisor bracket, apply grease and make sure it's installed properly.

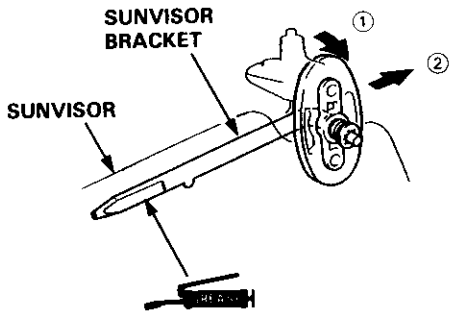

3. Remove the front and rear ceiling lights, then disconnect the connectors.

▲ : Screw, nut locations

A▲ : Screw, 2 B▲ : Nut, 2

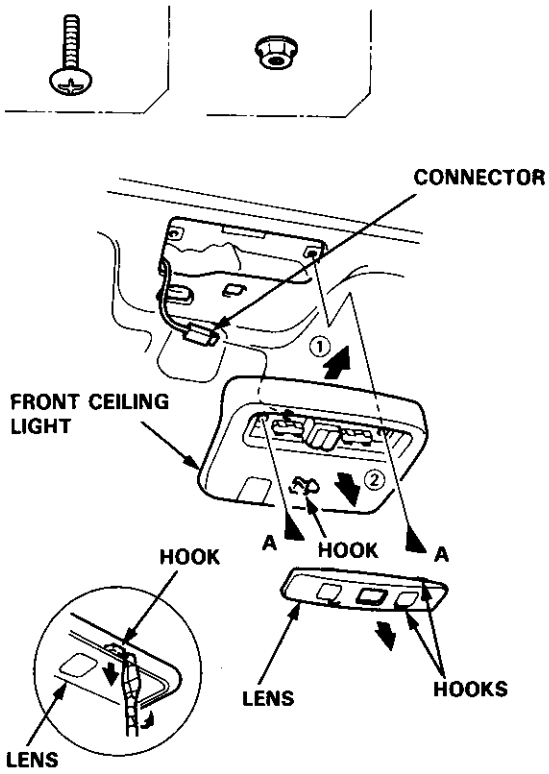

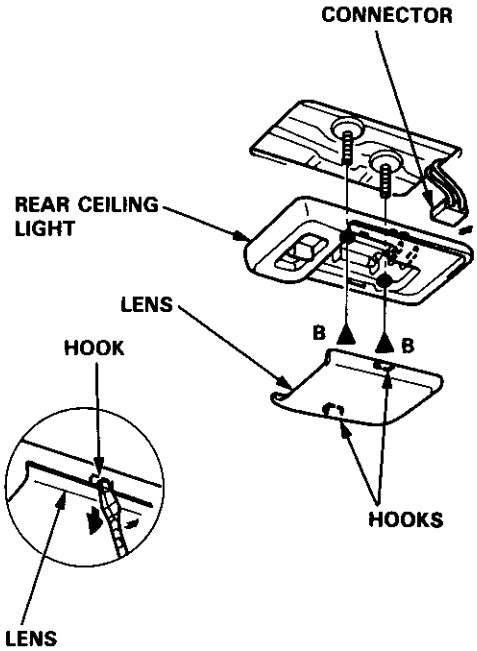

4. Remove the grab handles (front and rear passenger's) and grab hole caps (driver's).

▲ : Screw locations (2)

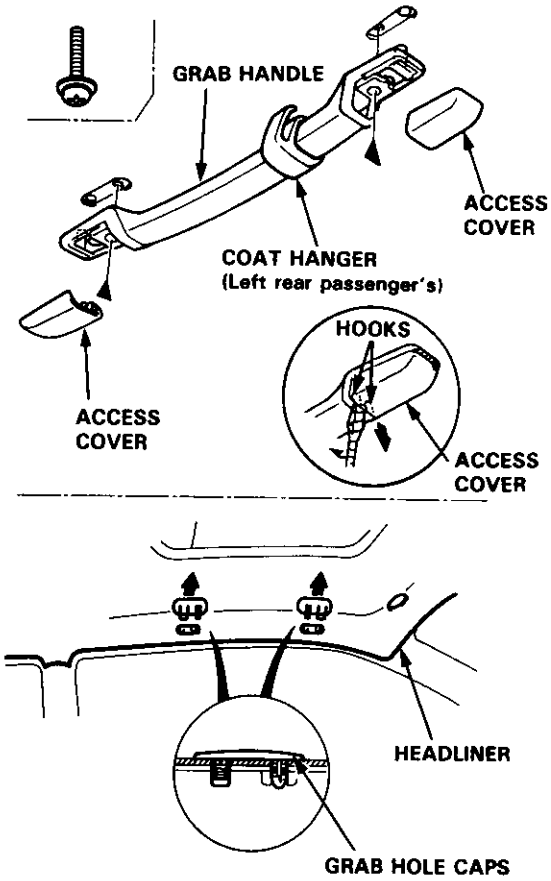

(cont'd)

Replacement (cont'd)

5. Remove the roof trim (moonroof model).

6. Detach the clips by sliding the headliner forward.

△: **Clip locations, 3**

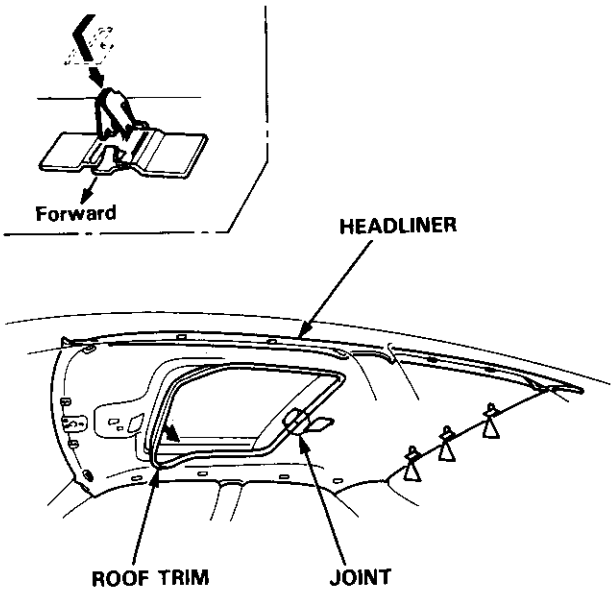

7. Remove the headliner through the passenger's door opening.

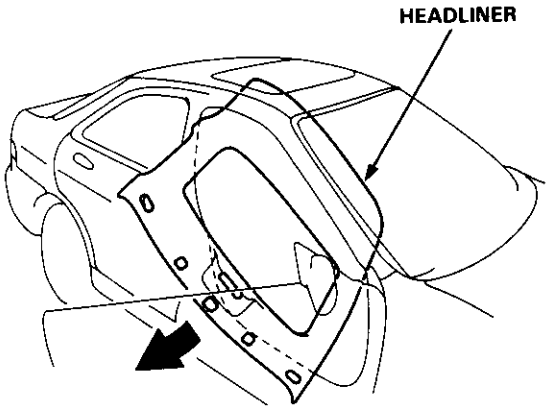

8. Installation is the reverse of the removal procedure.

NOTE:
- When inserting the headliner through the door opening, be careful not to fold or bend it. Also, be careful not to scratch the body.
- Check that both sides of the headliner are securely attached to the trim and panels.
- When installing the roof trim, install the joint toward the rear.

Front Seat Removal

NOTE: Take care not to scratch the seat covers and body.

1. Slide the front seat backward, then remove the bolts.

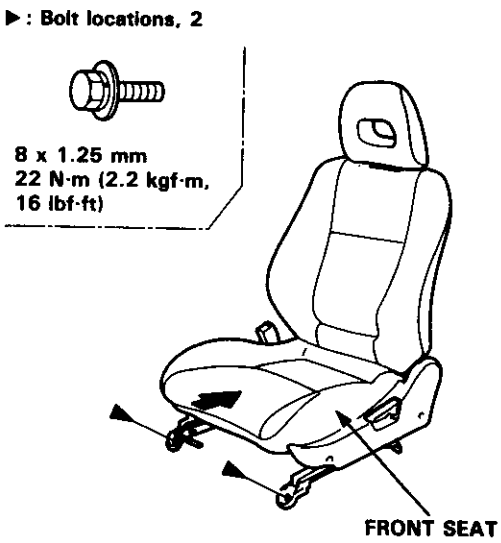

2. Slide the front seat forward, then remove the seat track end covers.

CAUTION: When prying with a flat tip screwdriver, wrap it with protective tape to prevent damage.

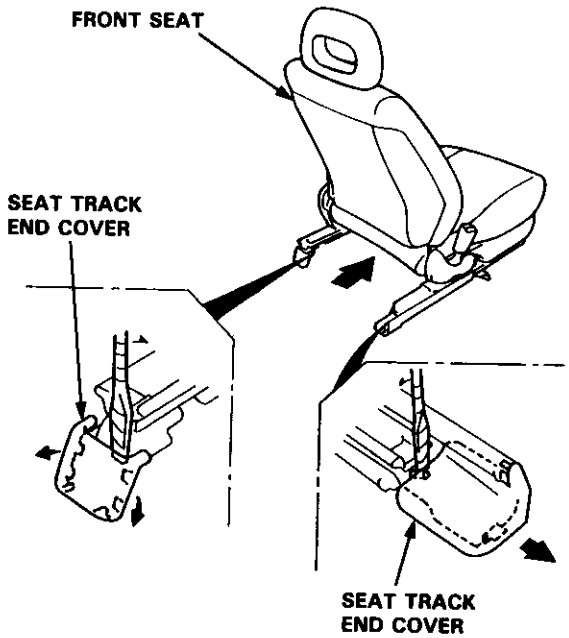

3. Remove the bolts.

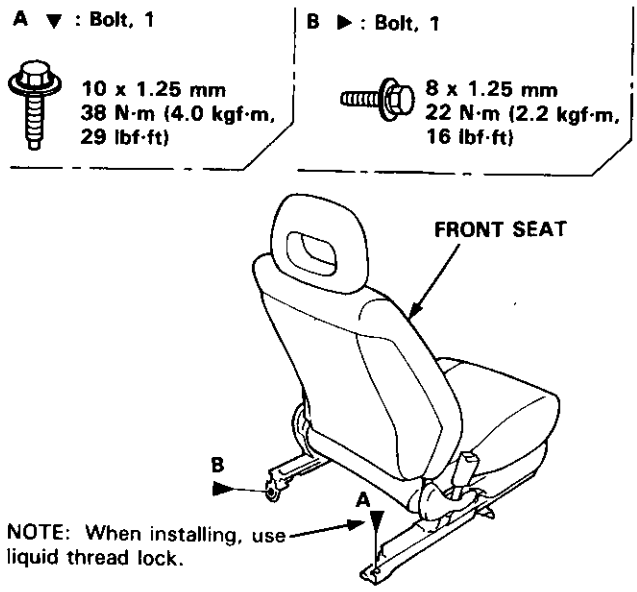

4. Lift the front seat, then disconnect the connector (driver's).

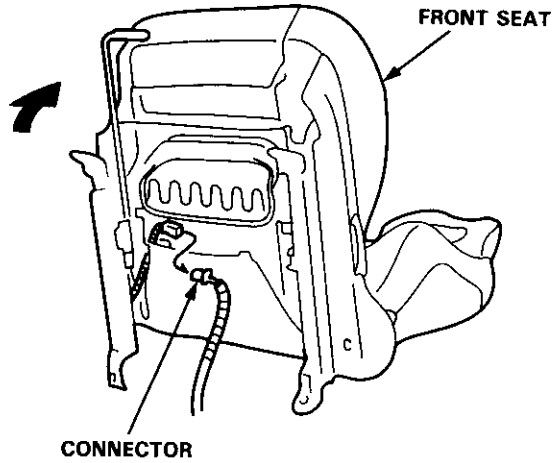

5. Carefully remove the front seat through the door opening.

6. Installation is the reverse of the removal procedure.

Front Seat Replacement

NOTE: Take care not to scratch the seat covers and body.

1. Remove the front seat through the door opening (see page 20-103).

2. Remove the screws and recline knob, then remove the recline cover.

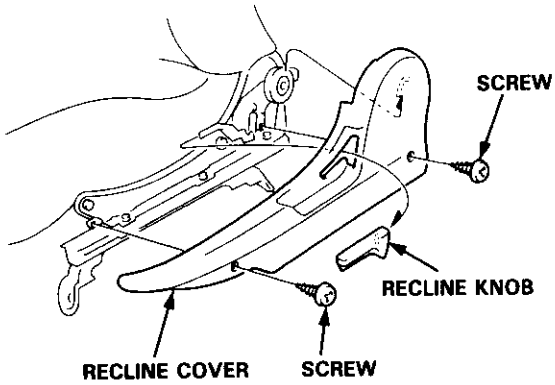

3. Remove the screws, then remove the center cover.

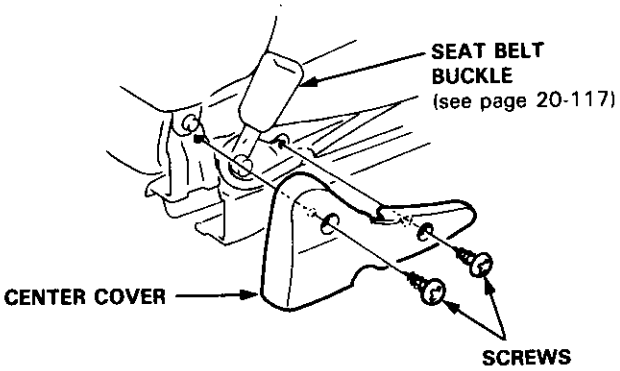

4. Remove the hook and fastener, then fold the seat-back cover back.

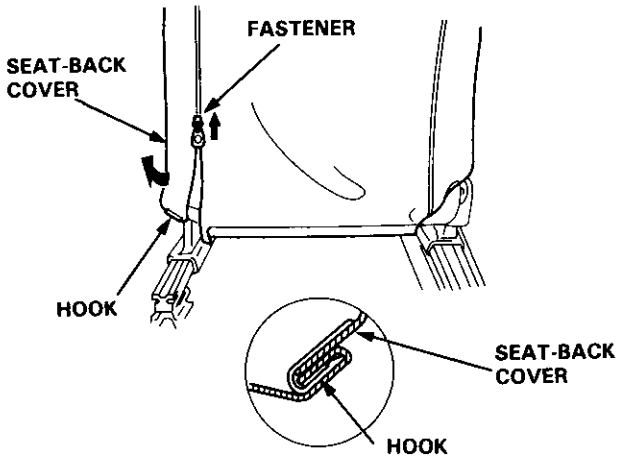

5. Fold the seat-back cover and pad, then remove the bolts.

▶ : Bolt locations, 2

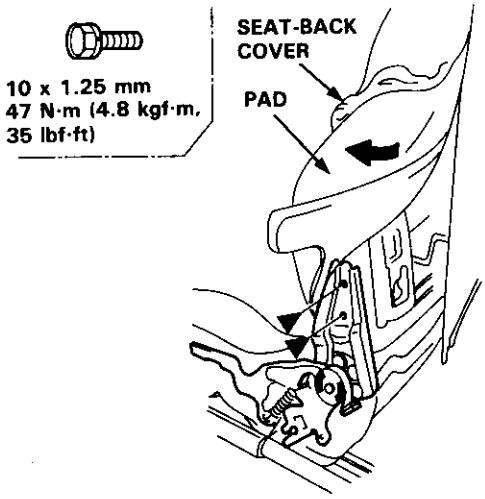

6. Remove the pivot nut.

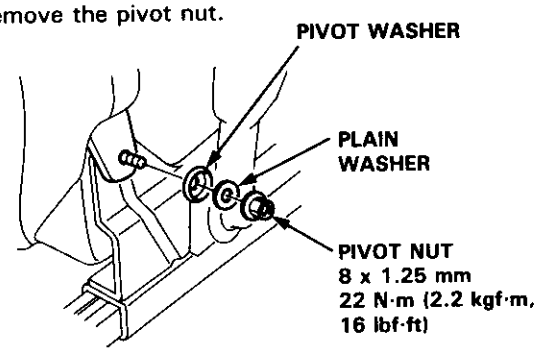

7. Remove the seat-back.

NOTE: Take care not to bend the hinge bracket.

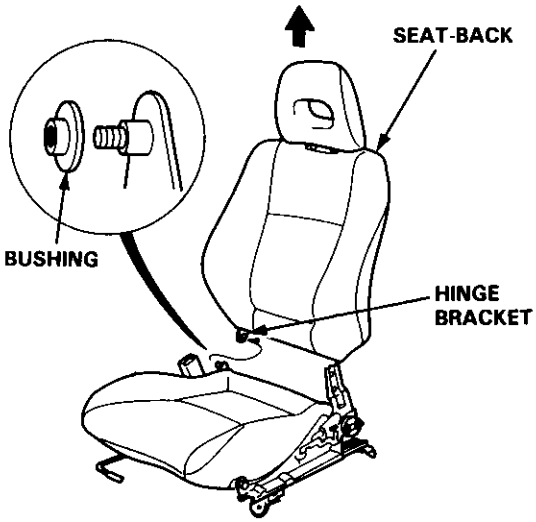

8. Separate the seat cushion and seat tracks.

NOTE:
- Before separating, slide the seat cushion backward.
- Take care not to bend the joint rod.

◀ : Bolt locations, 4

10 x 1.25 mm
47 N·m (4.8 kgf·m, 35 lbf·ft)

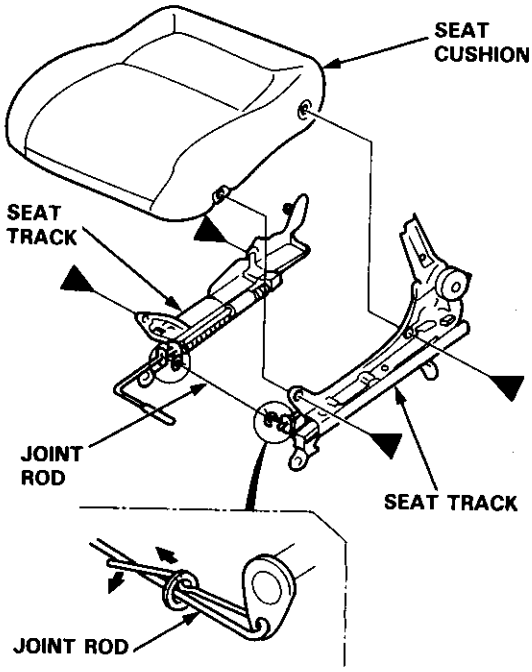

- Disconnect the rear seat access cable (hatchback passenger's).

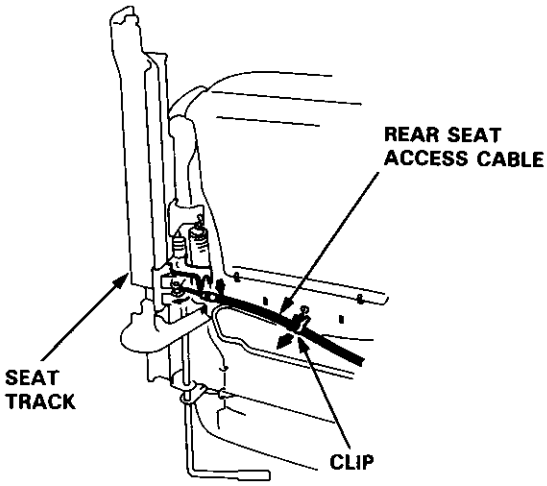

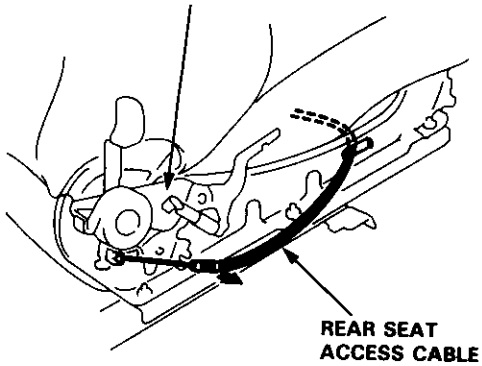

9. Separate the seat track and recline adjuster.

▲ : Bolt, nut locations

A▲ : Bolt, 1

8 x 1.25 mm
22 N·m (2.2 kgf·m, 16 lbf·ft)

B▼ : Nut, 2

8 x 1.25 mm
22 N·m
(2.2 kgf·m, 16 lbf·ft)

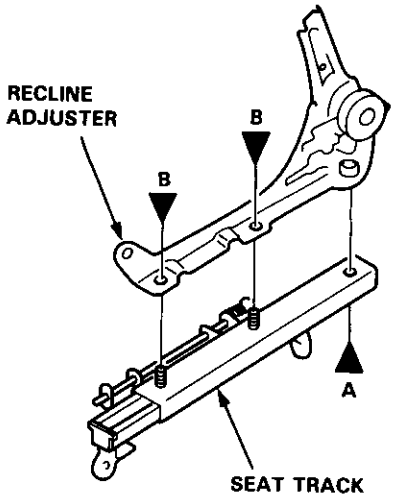

10. Installation is the reverse of the removal procedure.

NOTE:
- To prevent wrinkles when installing a seat-back cover, make sure the material is stretched evenly over the pad before securing all the hooks.
- Apply grease to the moving surfaces.

Front Seat Cover Replacement

CAUTION: Wear gloves to remove and install the seat covers.

NOTE: Take care not to tear the seams or damage the seat covers.

Seat-back cover removal:

1. Slide the front seat forward and fold the seat-back forward.
2. Remove the hooks and fasteners, then fold the seat-back cover back.

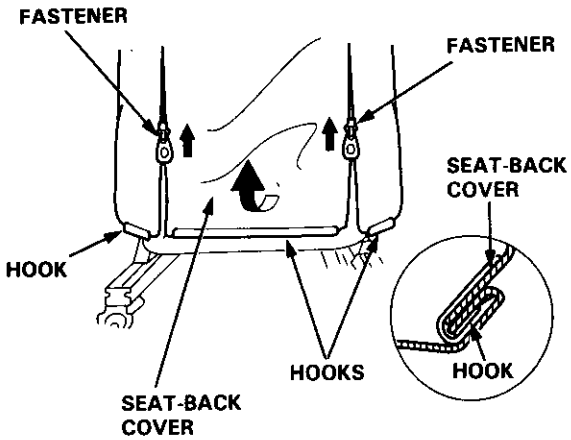

3. Remove the headrest and headrest guide.

▼ : Screw location, 1

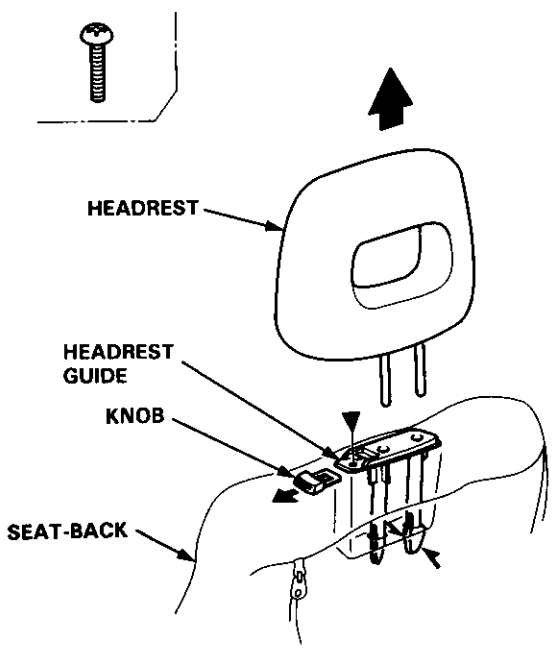

4. Remove the lumbar support knob.

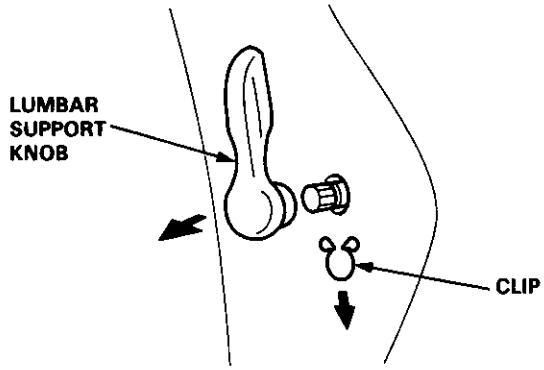

5. Remove the seat-back cover by releasing the inside clips.

Clip removal:

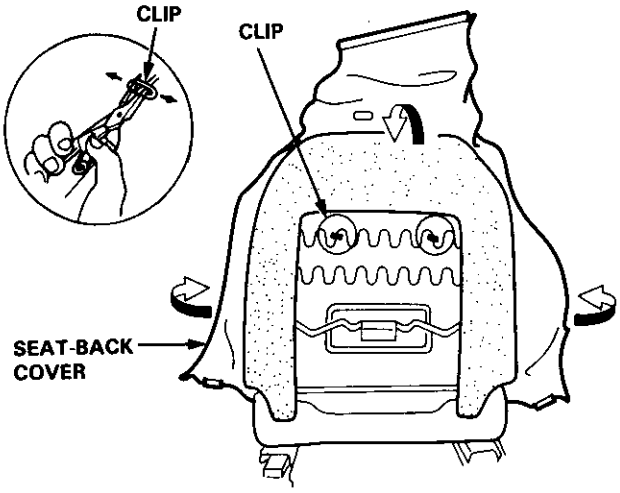

6. Pull back the edge of the seat-back cover all the way around, then release the clips.

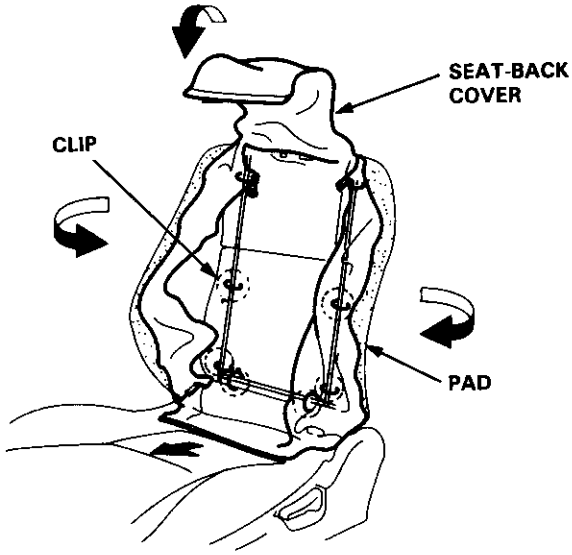

Seat cushion removal:

1. Remove the seat cushion from the seat tracks (see page 20-105).

2. Remove all clips from under the seat cushion, then loosen the seat cushion cover.

Clip removal:

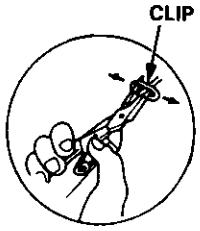

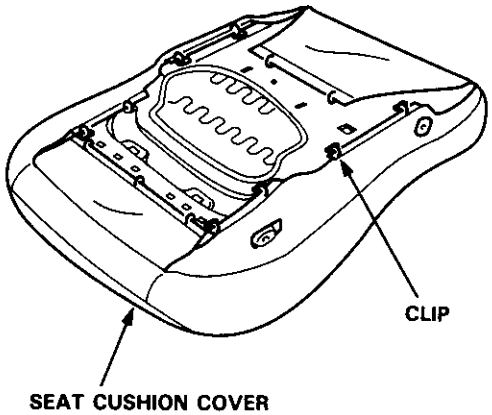

3. Pull back the edge of the seat cushion cover all the way around, then release the clips.

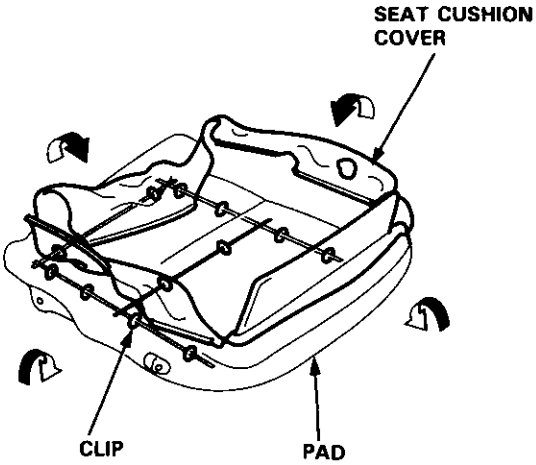

Installation is the reverse of the removal procedure.

NOTE:

- To prevent wrinkles when installing a seat cover, make sure the material is stretched evenly over the pad before securing all the clips.
- Replace the released clips with new ones.

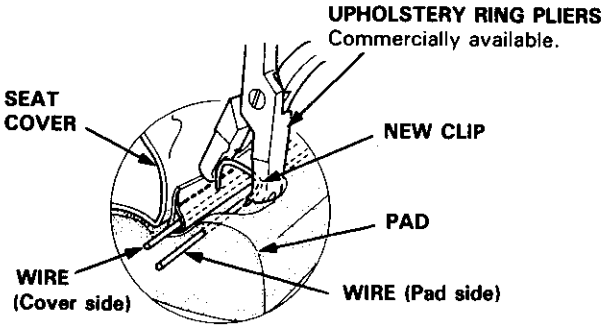

Rear Seat Replacement

Hatchback

NOTE: Take care not to scratch the seat covers and body.

1. Fold the seat-backs forward.

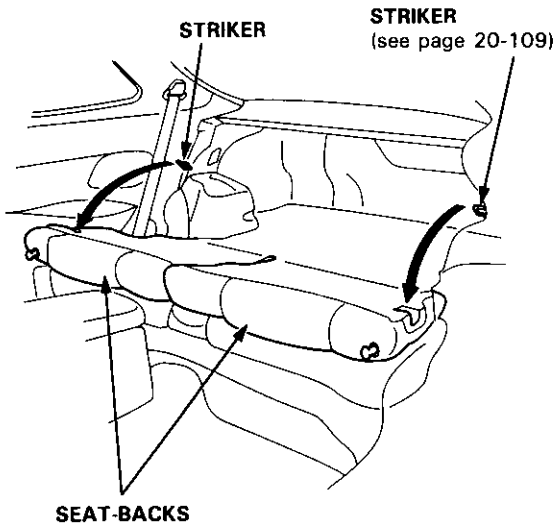

2. Remove the clips, then fold the trunk mat.

▽ : **Clip locations, 14**

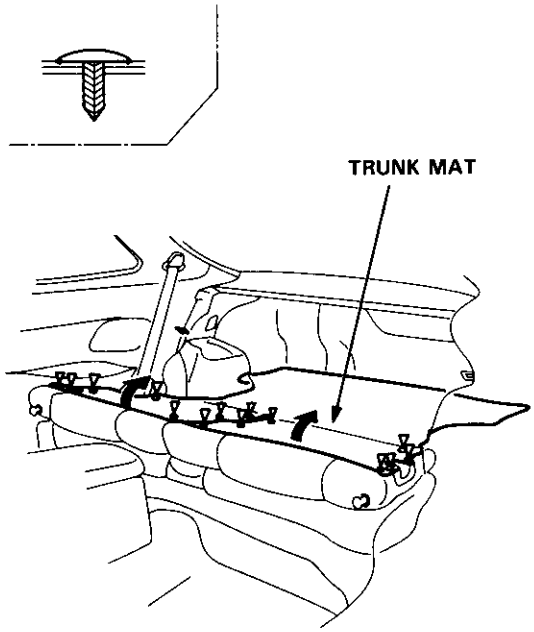

3. Remove the clip pin on each side.
   Slide the seat-backs outward, then remove the seat-backs from the pivot bracket.

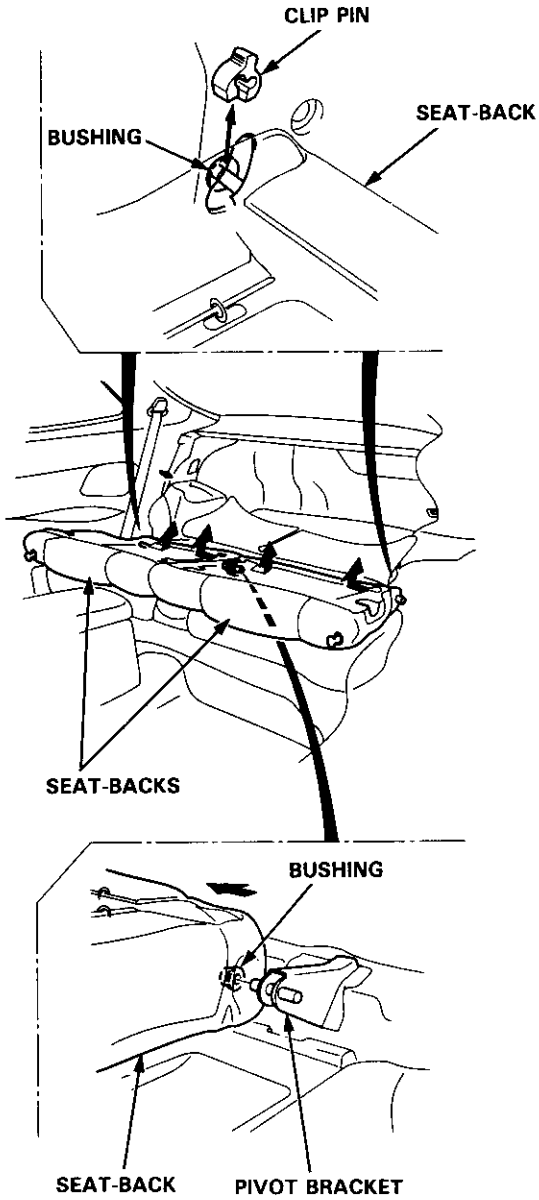

4. Remove the bolt, then remove the seat cushion.

▼ : Bolt locations, 1 ◌ : Hook locations, 2

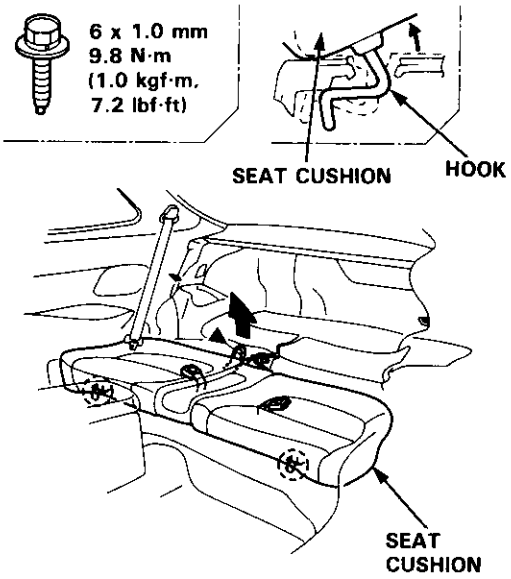

5. If necessary, remove the seat latch from the seat-back and remove the striker.

CAUTION: Wear gloves to remove and install the seat latch and latch collar.

▶ : Bolt, screw locations

A▶ : Bolt, 2 B▶ : Screw, 1

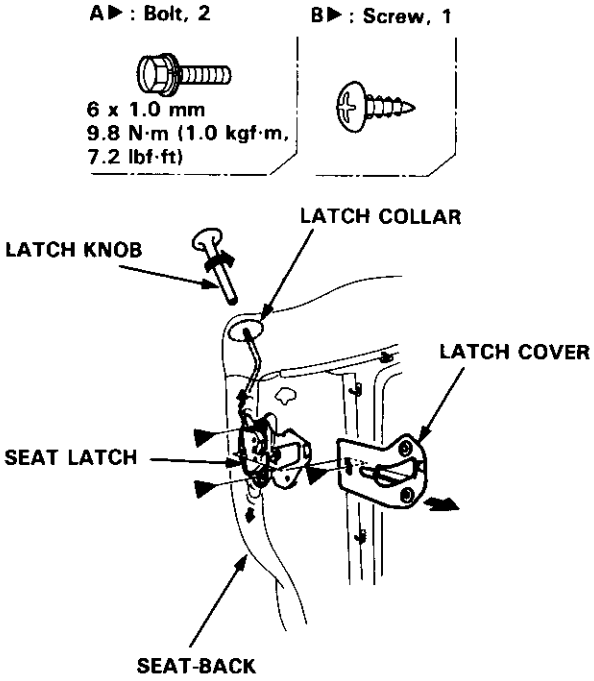

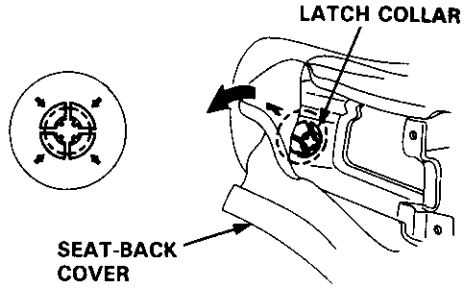

NOTE: When removing the striker, remove the side trim panel (see page 20-91).

▶ : Bolt locations, 2

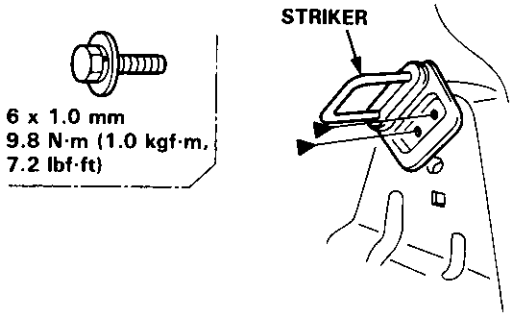

6. Installation is the reverse of the removal procedure.

NOTE:
- Make sure the seat-backs lock securely.
- If necessary, adjust the strikers.
- Before attaching the seat-backs and seat cushion, make sure there are no twists or kinks in the rear seat belts.
- When installing the seat cushion, slip the seat belt buckles through the slits in the seat cushion.

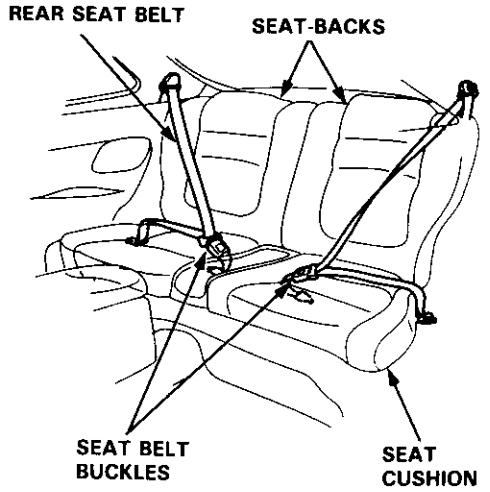

(cont'd)

Rear Seat Replacement (cont'd)

Sedan

NOTE: Take care not to scratch the seat covers and body.

1. Fold the seat-back forward.

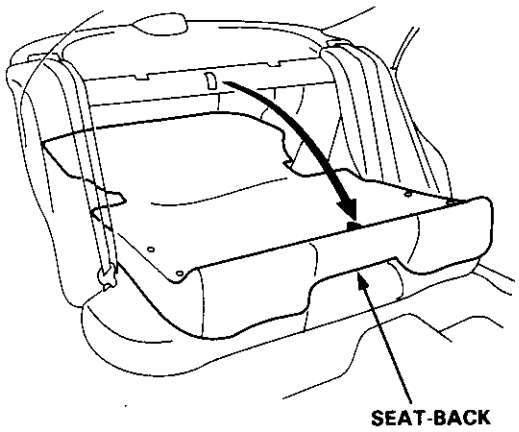

2. Remove the clips.

▽ : **Clip locations, 8**

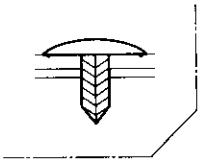

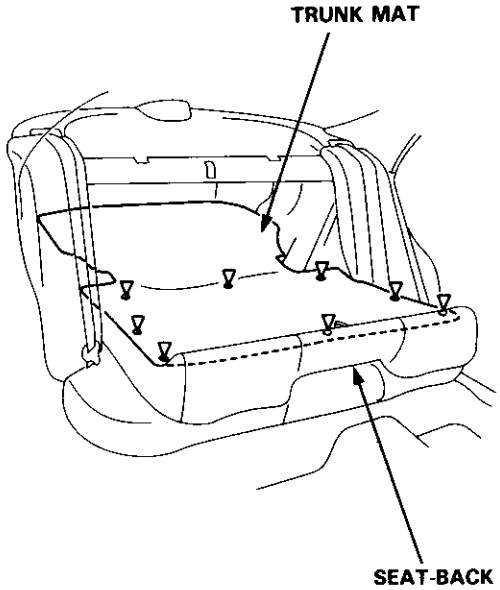

3. Detach the hook, then remove the trunk mat.

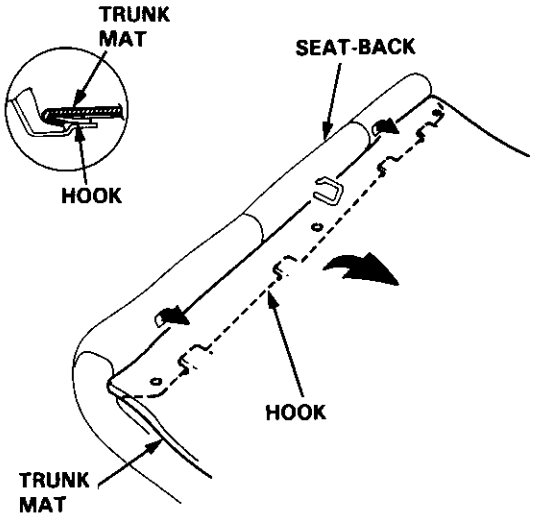

4. Remove the bolts, then remove the seat-back.

▼ : **Bolt locations, 4**

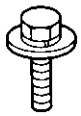

6 x 1.0 mm
9.8 N·m (1.0 kgf·m, 7.2 lbf·ft)

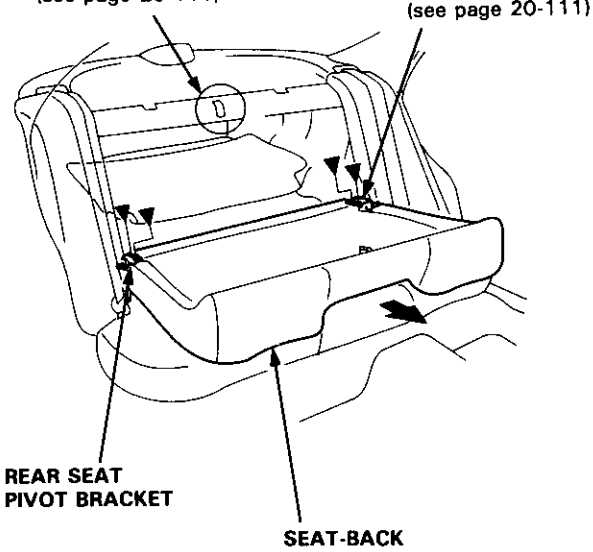

5. Remove the bolt, then remove the seat cushion.

▼ : Bolt location, 1 ◯: Hook locations, 2

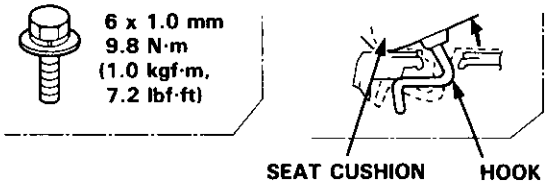

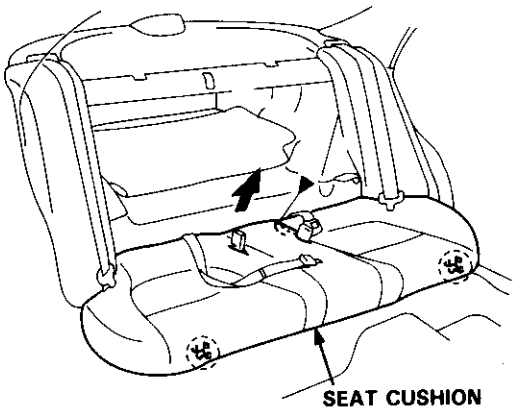

6. Remove the bolts, then remove the seat-back side bolsters by lifting them upward.

▲ : Bolt locations, 2 ◯: Hook locations, 2

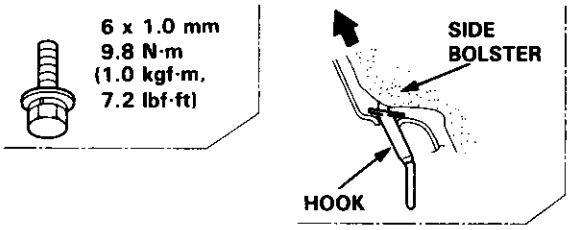

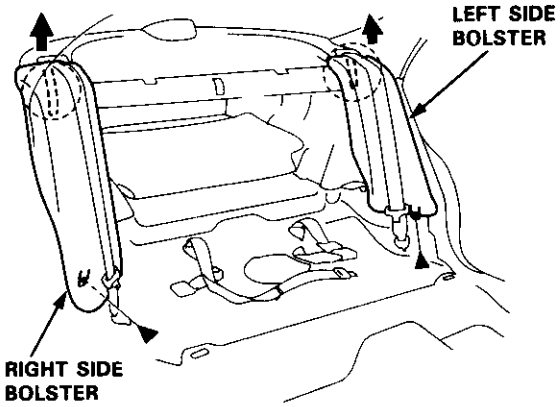

7. If necessary, remove the rear seat latch, lock cylinder and rear seat pivot bracket.

Rear seat latch/Lock cylinder removal:

Pry the rear shelf up after removing the rear shelf trim panel (see page 20-95) and seat lock cover.

NOTE: Take care not to bend the lock rod.

▼ : Bolt, screw locations

A▼ : Bolt, 2 B▼ : Screw, 2

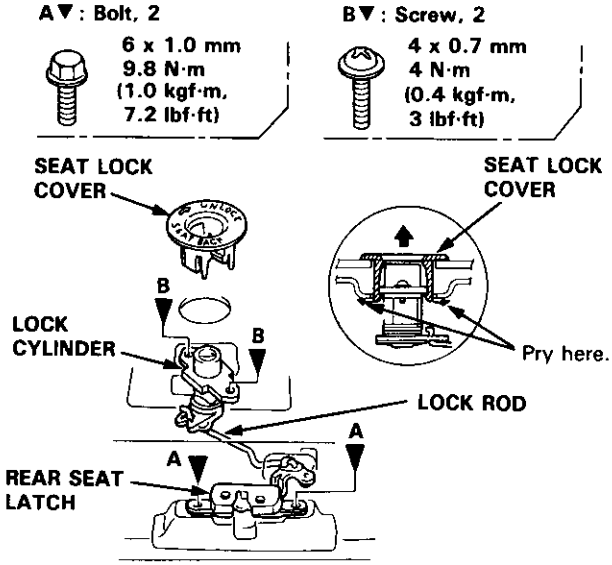

Rear seat pivot bracket removal:

NOTE: When installing the pivot bolt, apply grease to it.

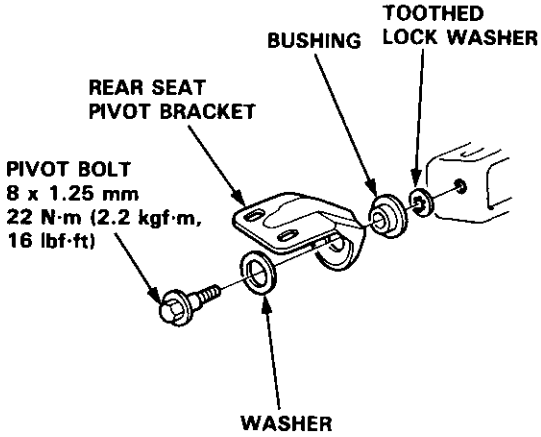

(cont'd)

Rear Seat Replacement (cont'd)

8. Installation is the reverse of the removal procedure.

NOTE:
- Make sure the seat-back locks securely.
- If necessary, adjust the rear seat latch and seat-back.
- Before attaching the seat-back, side bolsters and seat cushion, make sure there are no twists or kinks in the rear seat belts and center belt.
- When installing the seat cushion, slip the seat belt buckles through the slits in the seat cushion.

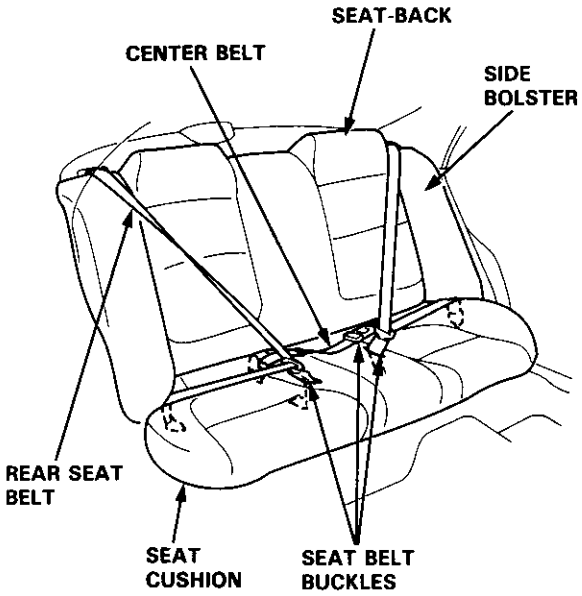

Rear Seat Cover Replacement

CAUTION: Wear gloves to remove and install the seat covers.

NOTE:
- Take care not to tear the seams or damage the seat covers.
- Remove the clips as shown.

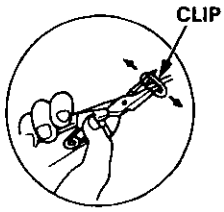

Seat-back cover removal:

Hatchback

1. Remove the seat-back (see page 20-108).

2. Remove the latch cover and latch collar (see page 20-109).

3. Remove all the clips from the back of the seat-back, then loosen the seat-back cover.

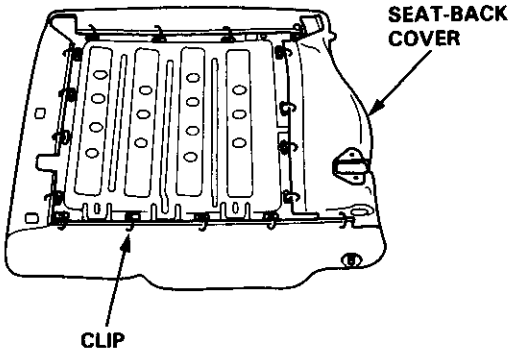

4. Pull back the edge of the seat-back cover all the way around, then release the clips.

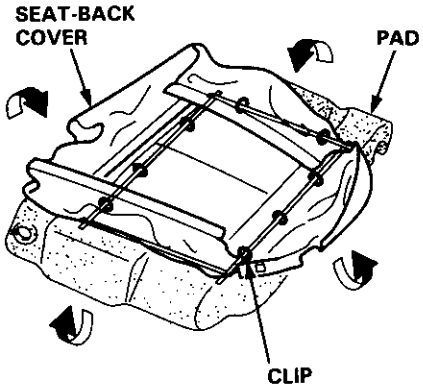

Sedan

1. *Remove the seat-back (see page 20-110).*

2. Remove all the clips from the back of the seat-back, then loosen the seat-back cover.

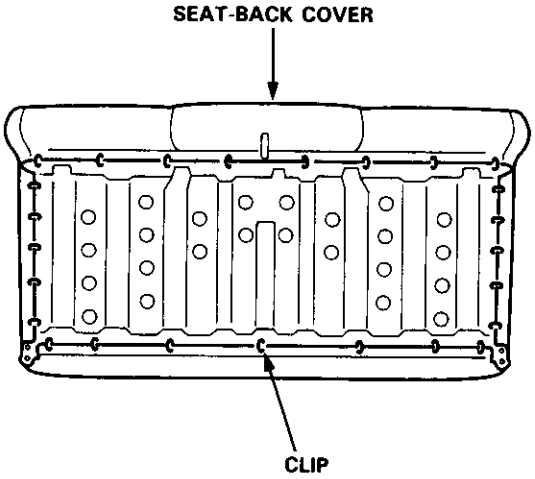

3. Pull back the edge of the seat-back cover all the way around, then release the clips.

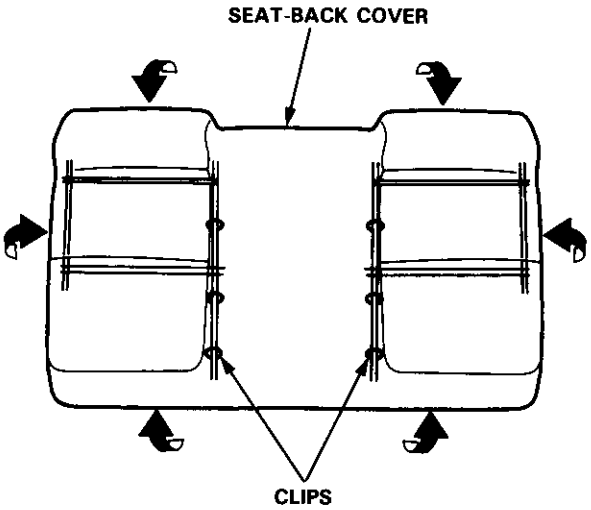

Seat cushion cover removal:

Hatchback

1. Remove the seat cushion (see page 20-109).

2. Remove the cushion center trim panel.

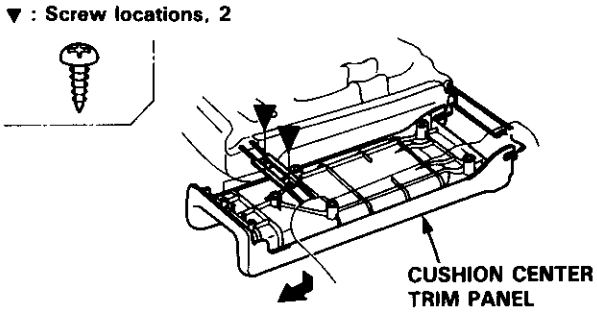

3. Remove all the clips from under the seat cushion, then loosen the seat cushion covers.

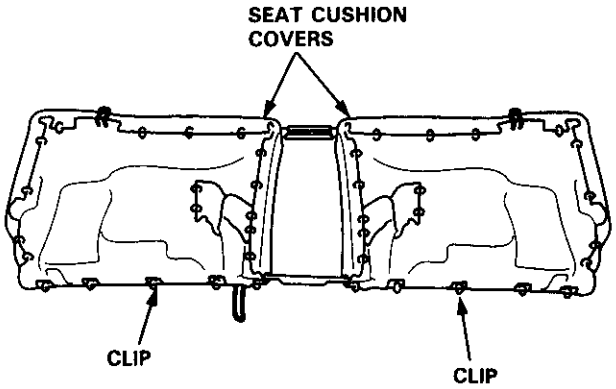

4. Pull back the edge of the seat cushion covers all the way around, then release the clips.

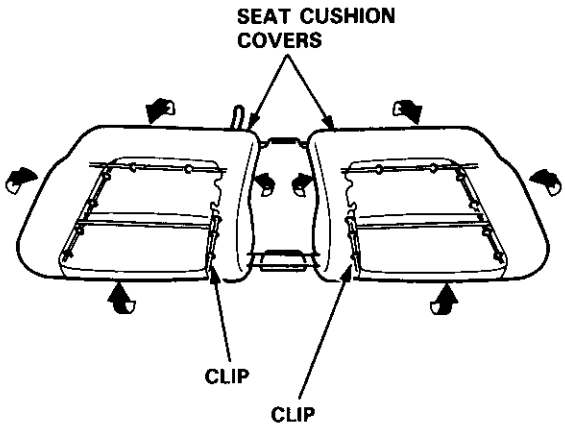

(cont'd)

Rear Seat Cover Replacement (cont'd)

Sedan

1. Remove the seat cushion (see page 20-111).

2. Remove all the clips from under the seat cushion, then loosen the seat cushion cover.

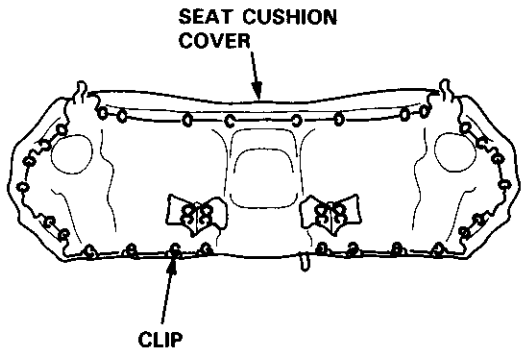

3. Pull back the edge of the seat cushion cover all the way around, then release the clips.

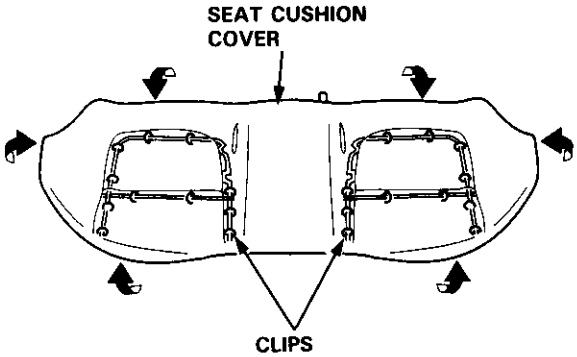

Installation is the reverse of the removal procedure.

NOTE:
- To prevent wrinkles when installing a seat cover, mark sure the material is stretched evenly over the pad before securing all the clips.
- Replace the released clips with new ones.

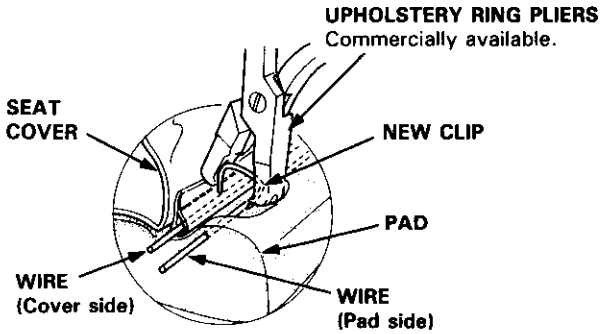

Front Seat Belt Replacement

CAUTION: Check the front seat belts for damage and replace them if necessary. Be careful not to damage then during removal and installation.

Front seat belt removal:

Hatchback

1. Remove the following parts, and slide the front seat forward fully.
   - Rear shelf (see page 20-91)
   - Rear trim panel (see page 20-92)
   - Rear seat (see page 20-108)
   - Side trim panel (see page 20-92)
2. Remove all the anchor bolts, the retractor bolt and the retractor mounting bolt, then remove the front seat belt.

   NOTE: When removing the anchor bolts and the retractor bolt, use a 17 mm socket or box-end wrench.
3. Check that the retractor locking mechanism functions as described on page 20-122.

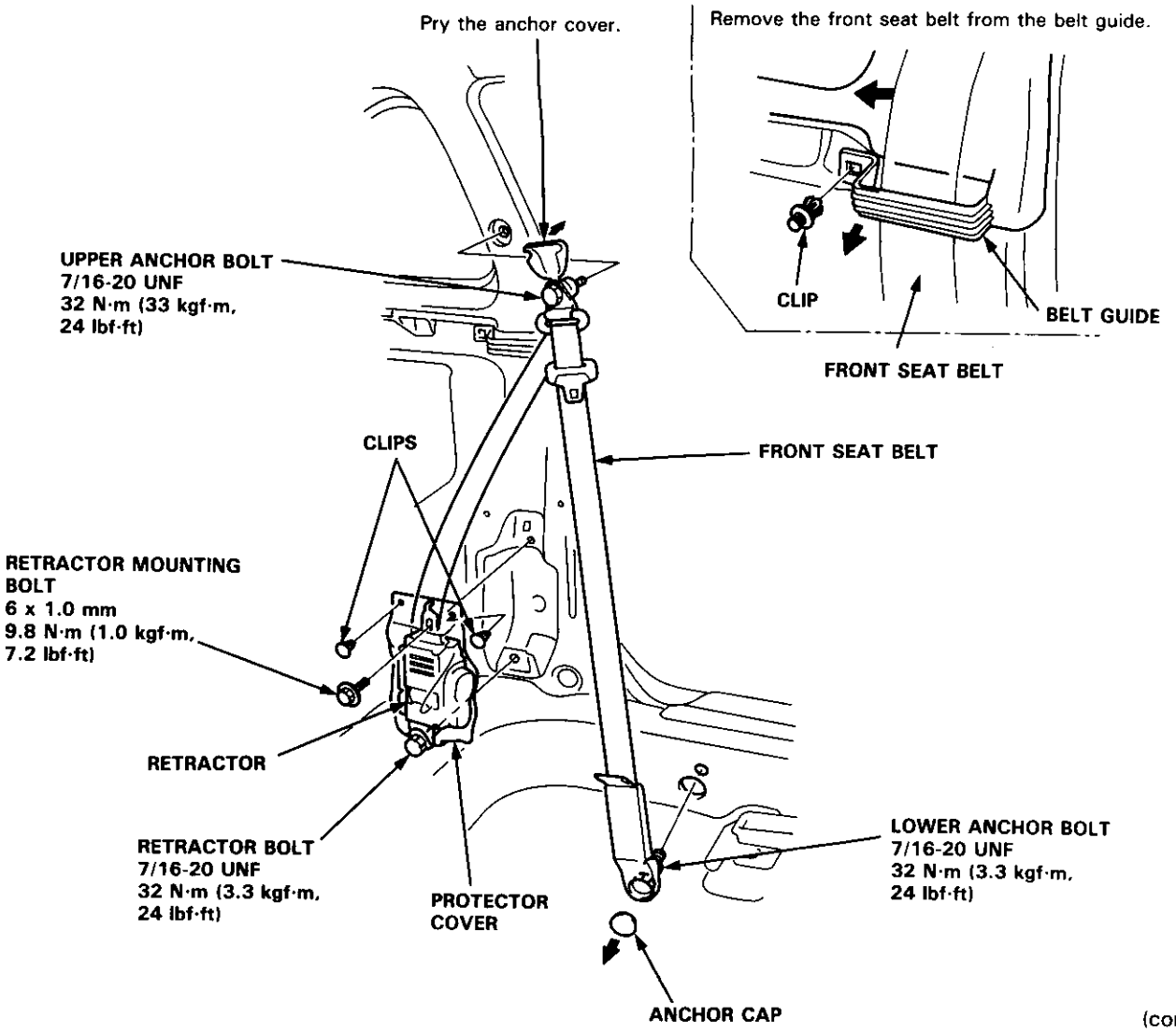

(cont'd)

Front Seat Belt Replacement (cont'd)

Sedan

1. Slide the front seat fully forward.

2. Remove the belt hole cap, then slip the front seat belt through the slit in the belt hole cap.

◀ : Screw location, 1

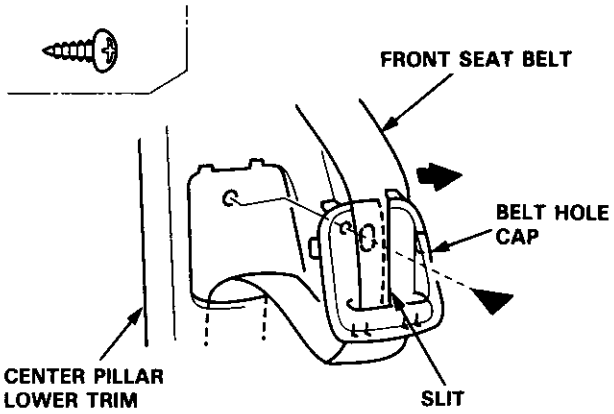

3. Remove the upper and lower anchor bolts from the front seat belt, then remove the center pillar lower trim.

   NOTE: When removing the anchor bolts, use a 17 mm socket or box-end wrench.

△ : Clip locations, 2

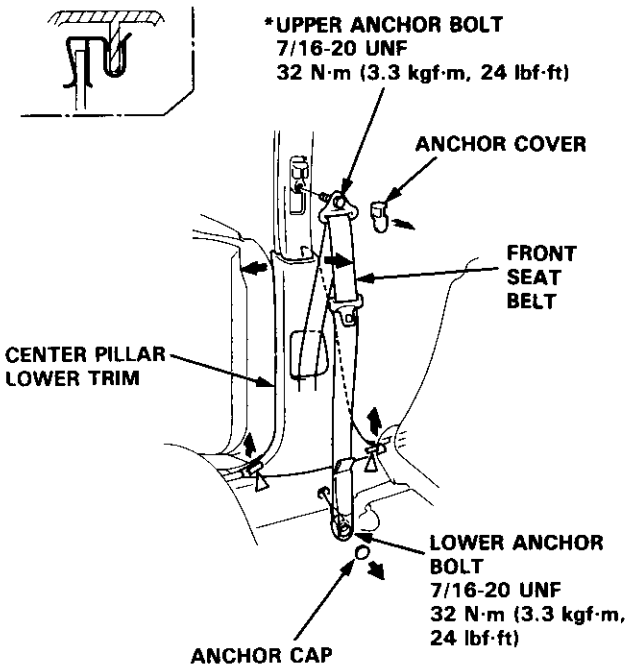

4. Remove the retractor bolt and retractor mounting bolt, then remove the front seat belt.

   NOTE: When removing the retractor bolt, use a 17 mm socket or box-end wrench.

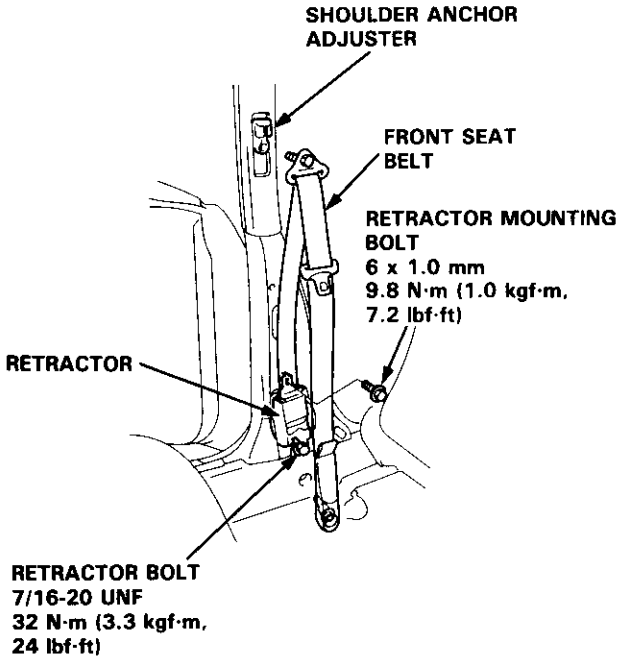

5. Check that the retractor locking mechanism functions as described on page 20-122.

6. Remove the center pillar trim (see page 20-94), then remove the shoulder anchor adjuster.

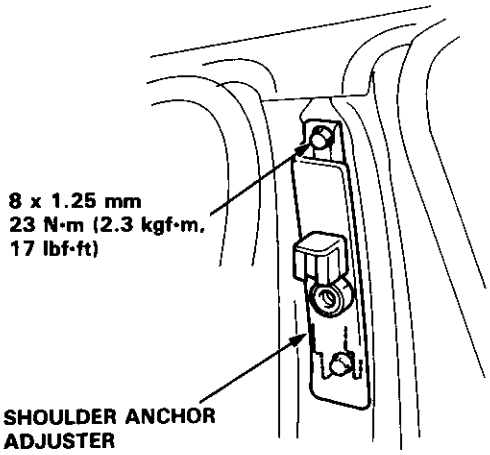

Seat belt buckle removal:

1. Remove the rear console (see page 20-128).
2. Slide the front seat until you can remove the screw, then remove the center cover.
3. Disconnect the connector (driver's), remove the center anchor bolt, then remove the seat belt buckle.

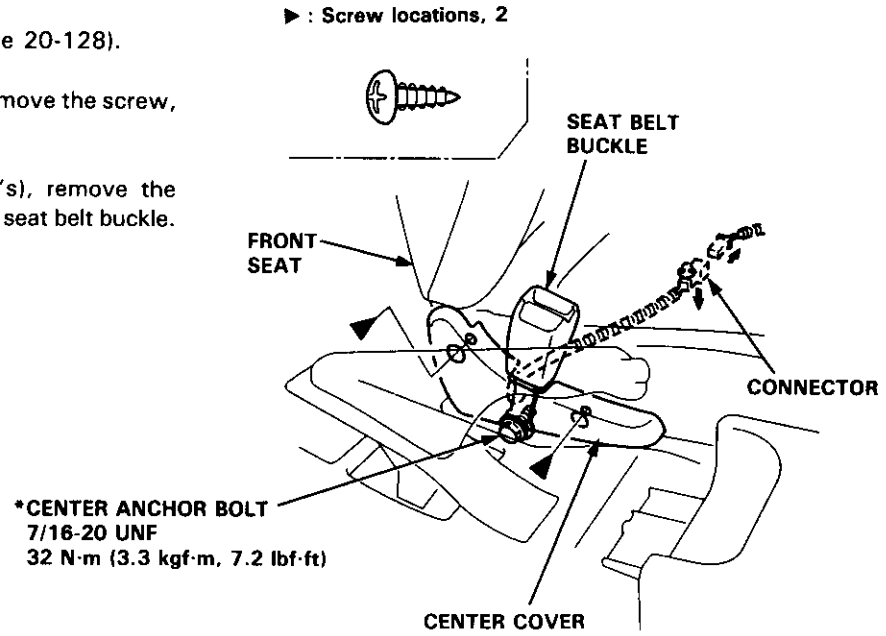

Upper and lower anchor bolt construction:

Hatchback

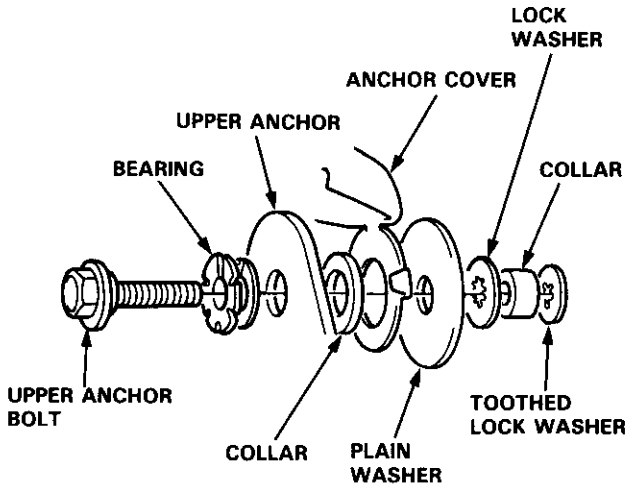

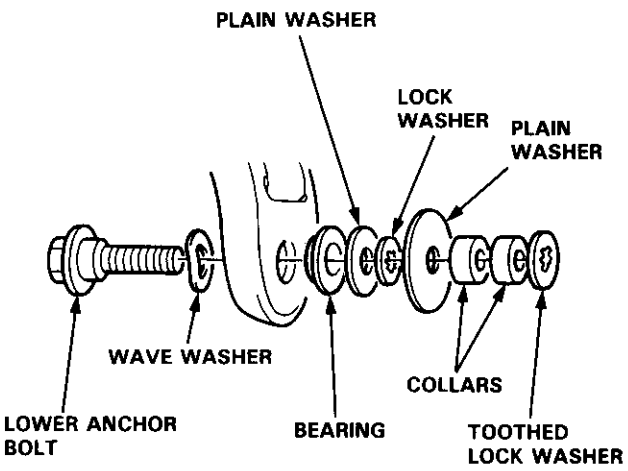

(cont'd)

Front Seat Belt Replacement (cont'd)

Sedan

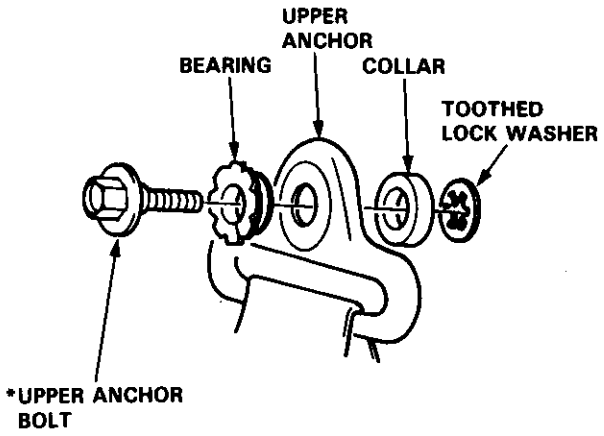

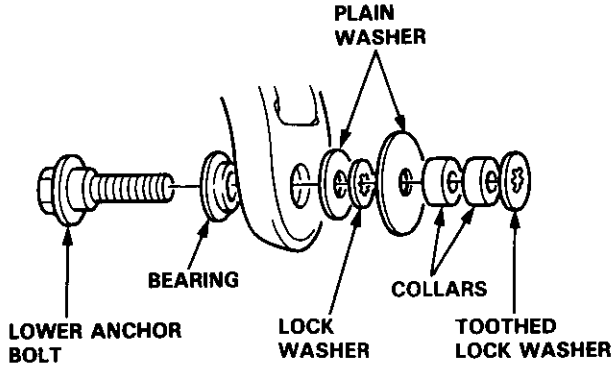

Center anchor bolt construction:

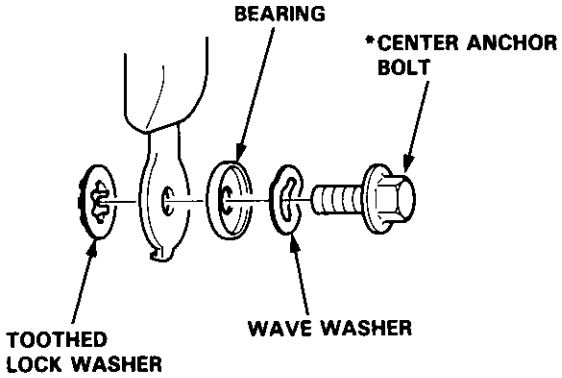

Retractor bolt construction:

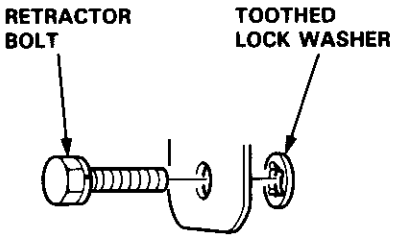

Installation is the reverse of the removal procedure.

NOTE:
- Make sure you assemble the washers and collars on the upper and lower anchor bolts as shown.
- Before attaching the side trim panel (Hatchback) or center pillar lower trim (Sedan), make sure there are no twists or kinks in the front seat belt.
- On reassembly, replace the upper anchor bolt (Sedan) and center anchor bolt (*), and use liquid thread lock.

Rear Seat Belt Replacement

CAUTION: Check the rear seat belts for damage and replace them if necessary. Be careful not to damage them during removal and installation.

Hatchback

1. Remove:

   - Rear shelf (see page 20-91)
   - Rear trim panel (see page 20-92)
   - Rear seat (see page 20-108)
   - Side trim panel (see page 20-92)

2. Remove all the anchor bolts, the retractor bolt and the retractor mounting bolt, then remove the rear seat belt and center belt.

   NOTE: When removing the anchor bolts and the retractor bolt, use a 17 mm socket or box-end wrench.

3. Check that the retractor locking mechanism functions as described on page 20-122.

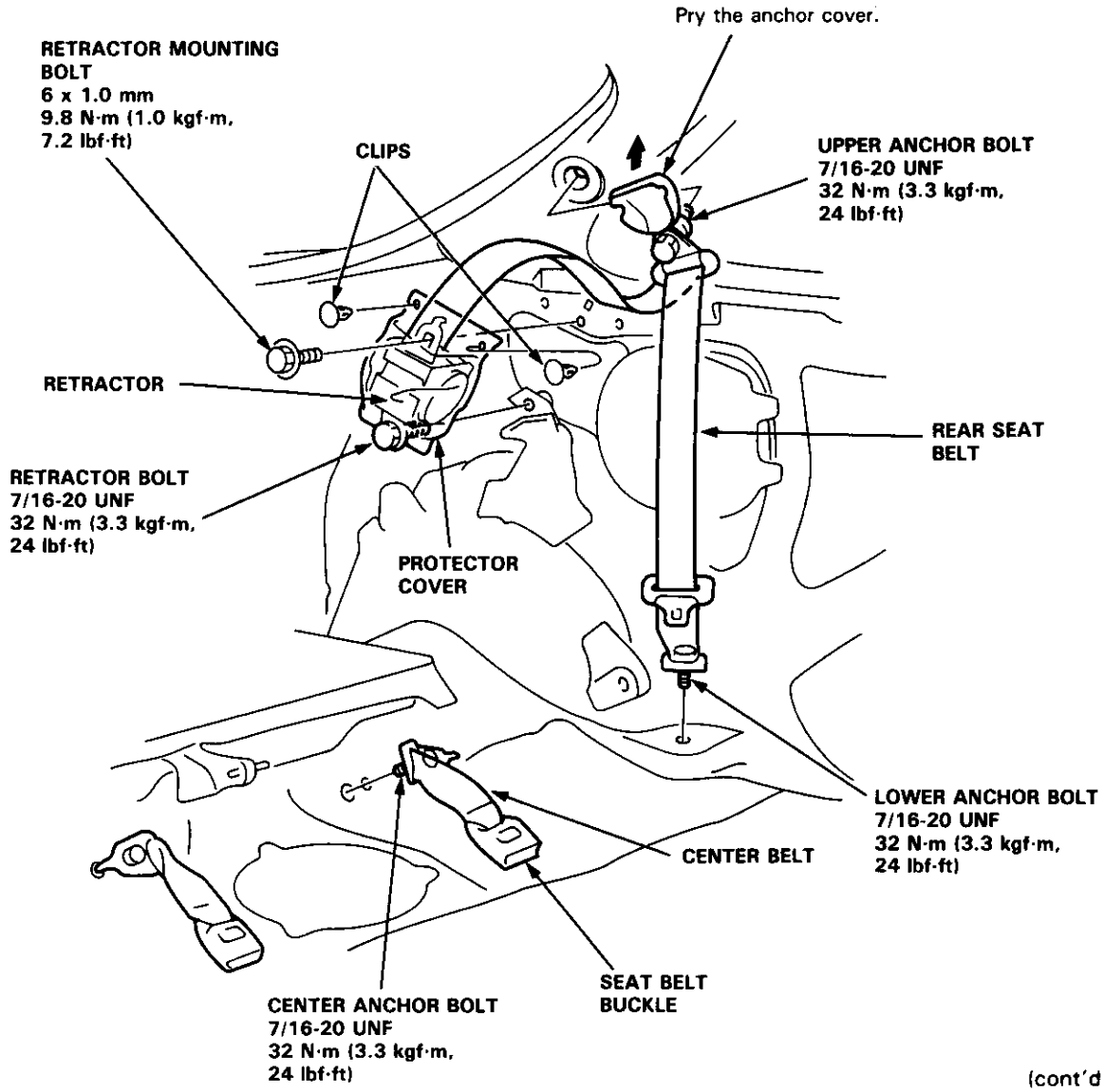

(cont'd)

Rear Seat Belt Replacement (cont'd)

Sedan

1. Remove:

   - Rear seat (see page 20-110)
   - Rear pillar trim panel (see page 20-95)
   - Rear shelf trim panel (see page 20-95)
   - Rear shelf (see page 20-96)
   - Trunk mat (see page 20-97)
   - Rear trim panel (see page 20-97)
   - Trunk side panel (see page 20-97)

2. Remove all the anchor bolts, the retractor bolt and the retractor mounting bolts, then remove the rear seat belts and center belts.

   NOTE: When removing the anchor bolts and the retractor bolt, use a 17 mm socket or box-end wrench.

3. Check that the retractor locking mechanism functions as described on page 20-122.

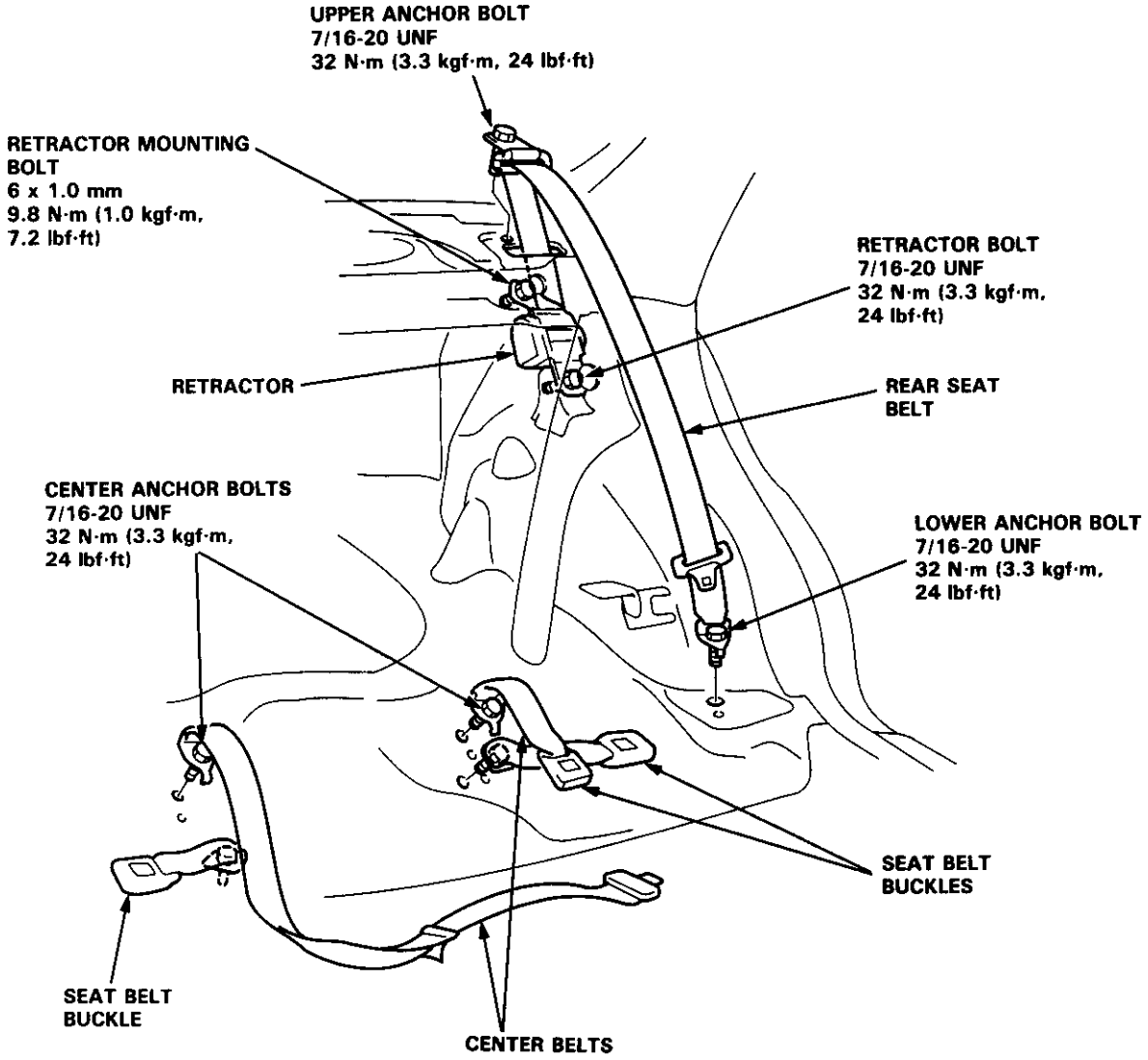

Upper anchor bolt construction:

Hatchback

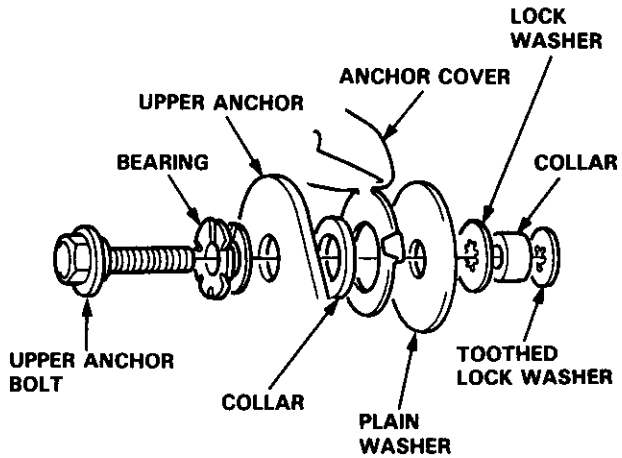

Sedan

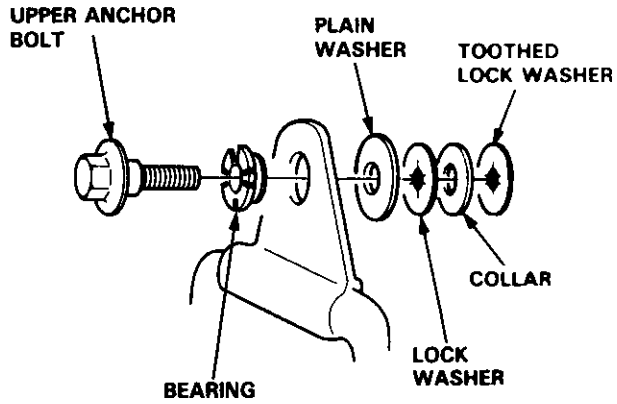

Lower and center anchor bolt construction:

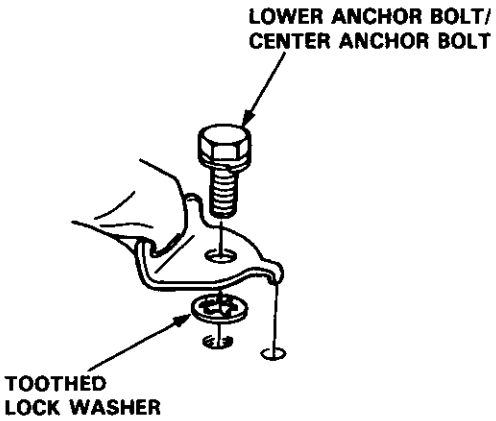

Retractor mounting bolt construction:

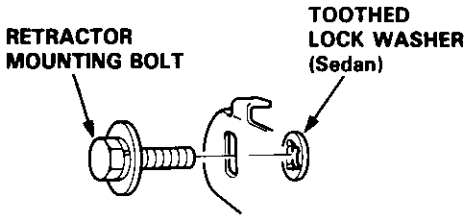

Retractor bolt construction:

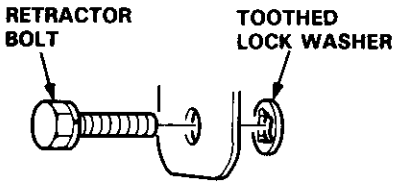

Installation is the reverse of the removal procedure.

NOTE:

- Make sure you assemble the washers and collars on the upper anchor bolt as shown.
- Before attaching the side trim panel (Hatchback) or rear shelf (Sedan), make sure there are no twists or kinks in the rear seat belt.
- Before attaching the seat-back, side bolsters (Sedan) and seat cushion, make sure there are no twists or kinks in the rear seat belts.
- When installing the seat cushion, slip the seat belt buckles through the slits in the seat cushion.

Inspection

Retractor Inspection

1. Before installing the retractor, check that the seat belt can be pulled out freely.

2. Make sure that the seat belt does not lock when the retractor is leaned slowly up to 15° from the mounted position. The seat belt should lock when the retractor is leaned over 40°.

   CAUTION: Do not attempt to disassemble the retractor.

Hatchback

* : Mounted Position

Front:

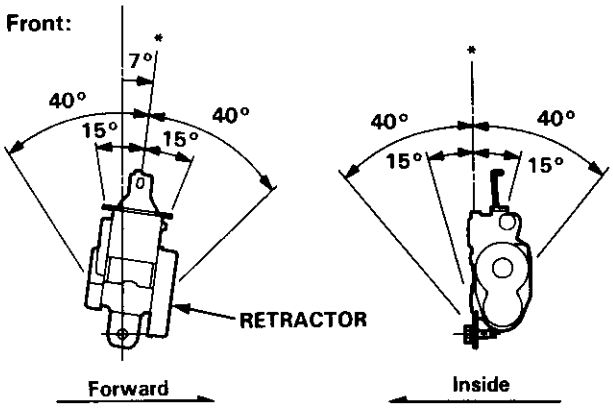

Rear:

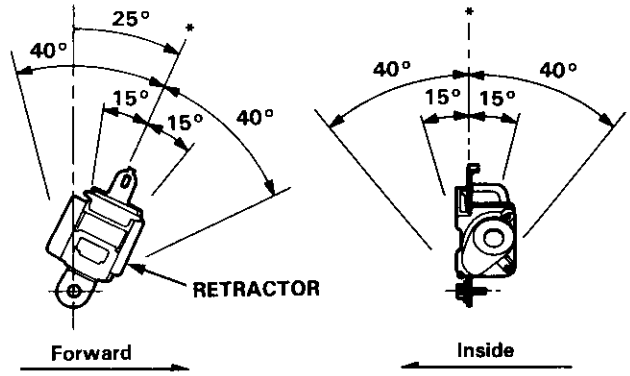

Sedan

Front:

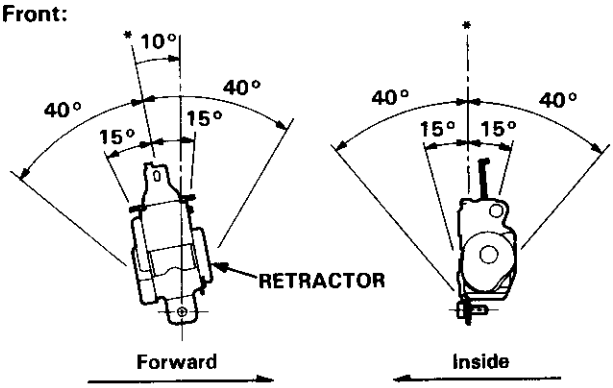

Rear:

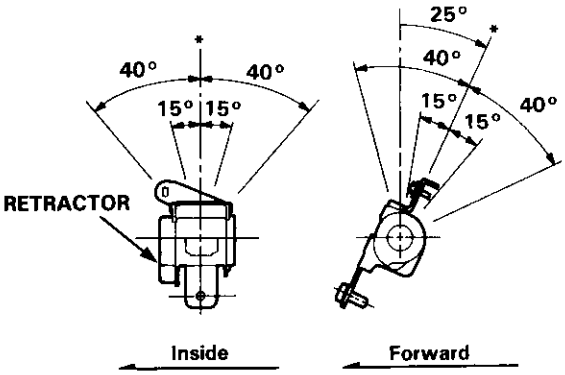

3. Replace the seat belt with a new one if there is any abnormality.

On-the-Car Seat Belt Inspection

1. Check that the seat belt is not twisted or caught on anything.

2. After installing the anchors, check for free movement on the anchor bolts. If necessary, remove the anchor bolts and check that the washers and other parts are not damaged or improperly installed.

3. Check the seat belts for damage or discoloration. Clean with a shop towel if necessary.

   CAUTION: Use only soap and water to clean.

   NOTE: Dirt build-up in the metal loops of the upper anchors can cause the seat belts to retract slowly. Wipe the inside of the loops with a clean cloth dampened in isopropyl alcohol.

4. Check that the seat belt does not lock when pulled out slowly. The seat belt is designed to lock only during a sudden stop or impact.

5. Make sure that the seat belt will retract automatically when released.

6. Replace the seat belt with a new one if there is any abnormality.

Child Seat Anchor Plate

Attachment points are provided for a rear seat mounted child restraint system which uses a top tether.
The attachment points are located on the rear trim panel or rear shelf, just behind the rear seat-back.
When using a child seat with a top tether, install the child seat anchor plates securely.

Hatchback

NOTE: The rear trim panel has perforations at each attachment point. Cut the rear trim panel along the perforations to make a hole.

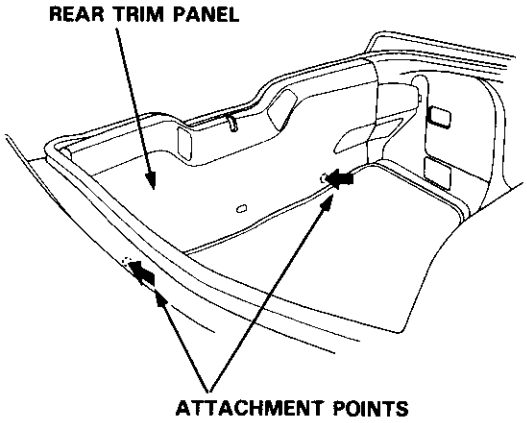

Sedan

NOTE: Remove the plug covers from the attachment points of the rear shelf (Canada).
Use a razor blade or sharp knife to carefully cut a 1 inch diameter circle at the location of the attachment point (USA).

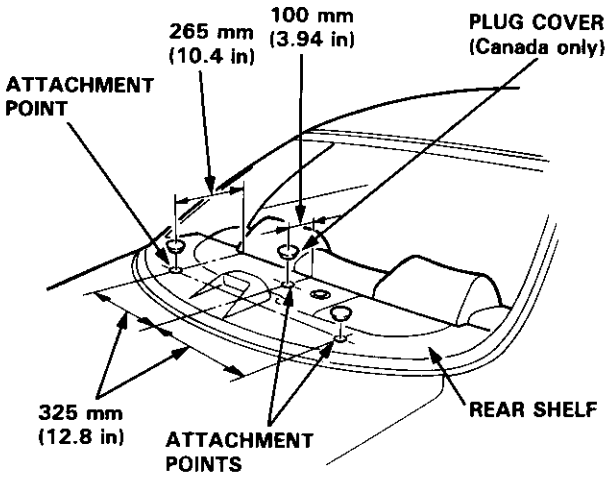

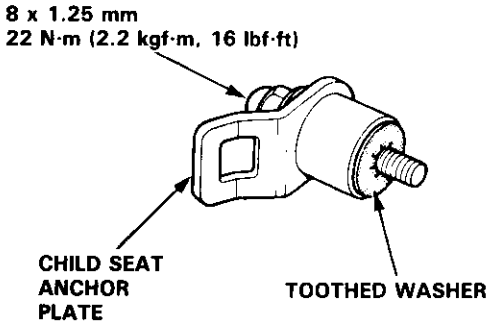

NOTE:
- Do not remove the toothed washer from the child seat anchor plate. Use the child seat anchor plate with the toothed washer attached to it.
- When installing a child seat on the rear seat, follow the intructions of the manufacturer of the child seat.
- Additional anchor plates are available.

⚠ WARNING

- **Do not use the child seat anchor plate for any other purpose; it is designed exclusively for installation of a child seat.**
- **Make sure the rear seat-back is locked firmly when installing a child seat.**

Carpet

Replacement

SRS wire harnesses are routed near the carpet.

CAUTION:

- **All SRS electrical wiring harnesses are covered with yellow insulation.**
- **Before disconnecting any part of the SRS wire harness, connect the short connectors (see page 20-272).**
- **Replace the entire affected SRS harness assembly if it has an open circuit or damaged wiring.**

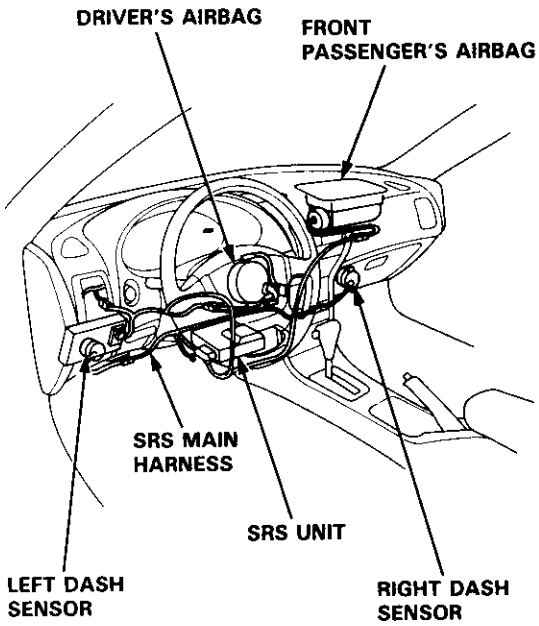

1. Remove:

Hatchback

- Front seat (see page 20-103)
- Rear seat (see page 20-108)
- Rear shelf (see page 20-91)
- Rear trim panel (see page 20-92)
- Side trim panel (see page 20-92)
- Front seat belt lower anchor (see page 20-115)
- Front and rear consoles (see page 20-128)
- Kick panel (see page 20-91)
- Dashboard lower cover (see page 20-131)
- Opener cover (see page 20-154)

Sedan

- Front seat (see page 20-103)
- Rear seat (see page 20-110)
- Rear pillar trim panel (see page 20-95)
- Center pillar lower trim (see page 20-94)
- Front seat belt lower anchor (see page 20-116)
- Front and rear consoles (see page 20-128)
- Kick panel (see page 20-91)
- Dashboard lower cover (see page 20-131)
- Opener cover (see page 20-155)

2. Remove the footrest.

▼ : Bolt locatios, 2

6 x 1.0 mm
9.8 N·m (1.0 kgf·m, 7.2 lbf·ft)

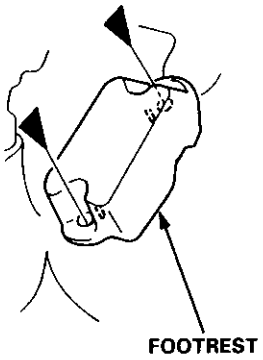

3. Remove the door sill molding from each side.

NOTE:
- Take care not to damage the door sill moldings.
- If necessary, separate the door sill molding and carpet.

Hatchback

△: Clip locations, 4 ▲: Push nut locations, 5

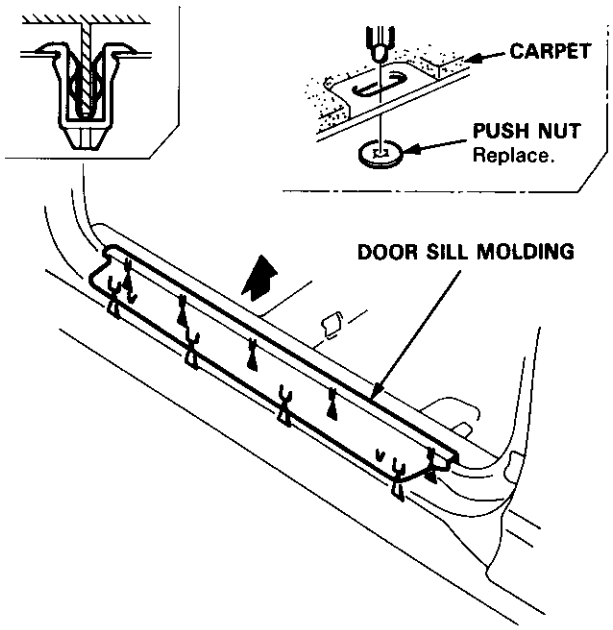

Sedan

△ : Clip locations, 3 ▲ : Push nut locations, 4

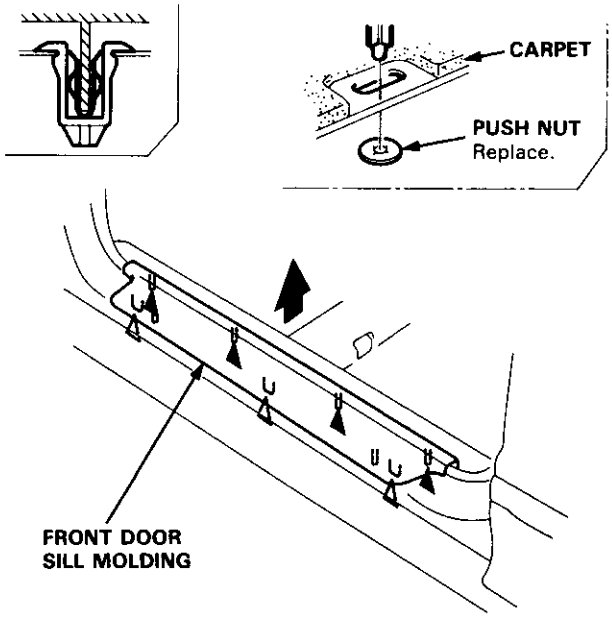

▽ : Clip locations

A▽ : Clip, 2 B◁ : Clip, 1 C◁ : Clip, 1 D▷ : Clip, 1

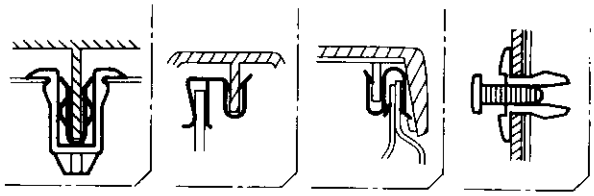

▲ : Push nut locations, 2

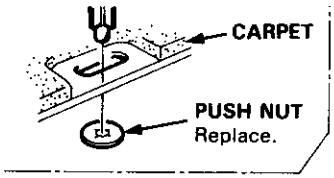

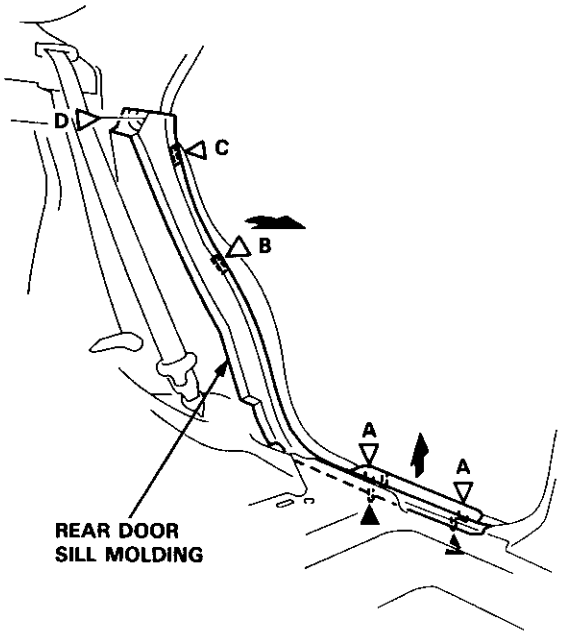

(cont'd)

Replacement (cont'd)

4. Remove the SRS unit covers.

▷ : Clip locations, 2

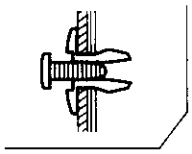

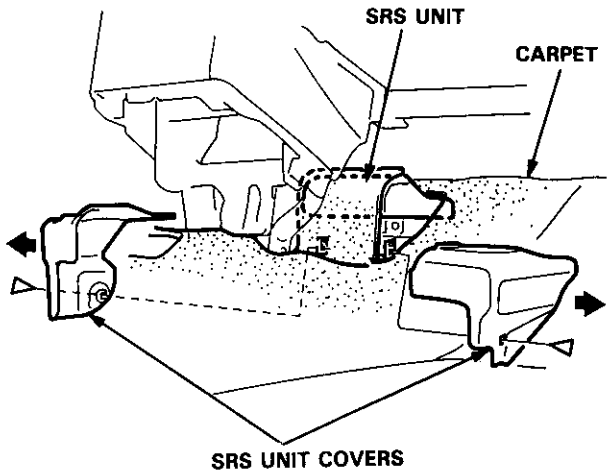

5. Cut the Ⓐ and Ⓑ areas in the carpet, then pull it back, as shown.

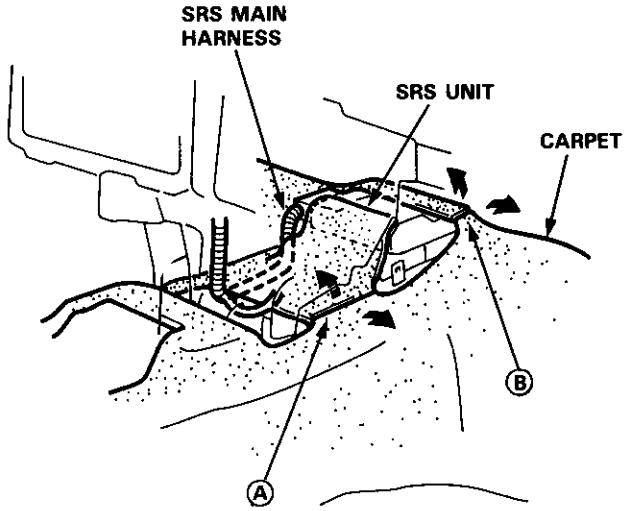

6. Cut the carpet under the parking brake lever.

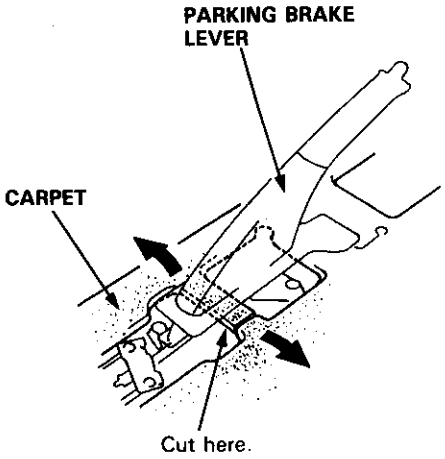

7. Remove the dashboard center bracket and center beam bracket.

▼ : Bolt locations

A▼ : Bolt, 4

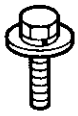

8 x 1.25 mm
22 N·m
(2.2 kgf·m,
16 lbf·ft)

B▶ : Bolt, 1

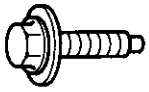

6 x 1.0 mm
9.8 N·m (1.0 kgf·m,
7.2 lbf·ft)

C▶ : Bolt, 2

6 x 1.0 mm
9.8 N·m
(1.0 kgf·m,
7.2 lbf·ft)

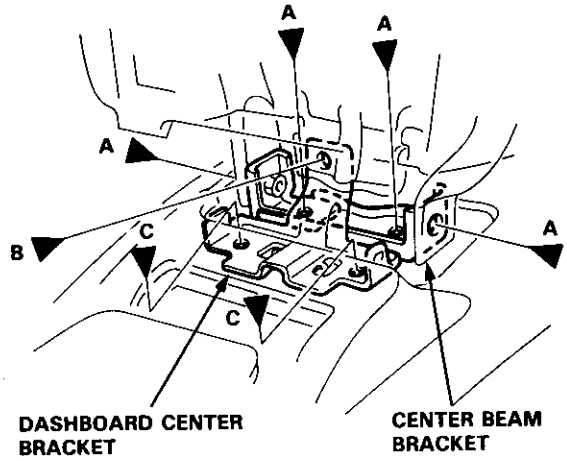

8. Remove the carpet by sliding it rearward.

▽ : Clip locations

A▽ : Clip, 3 B▷ : Clip, 1

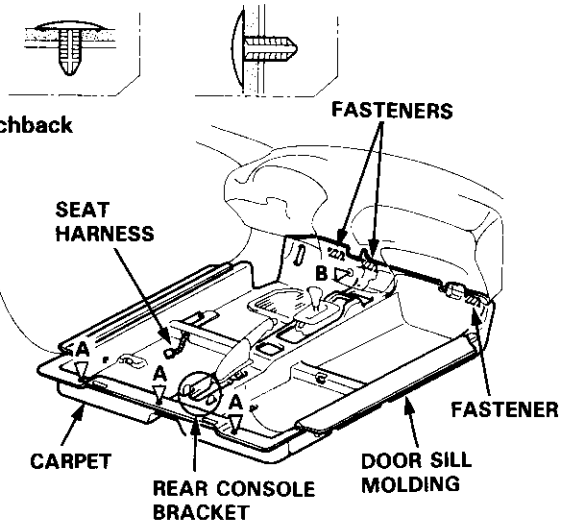

Sedan

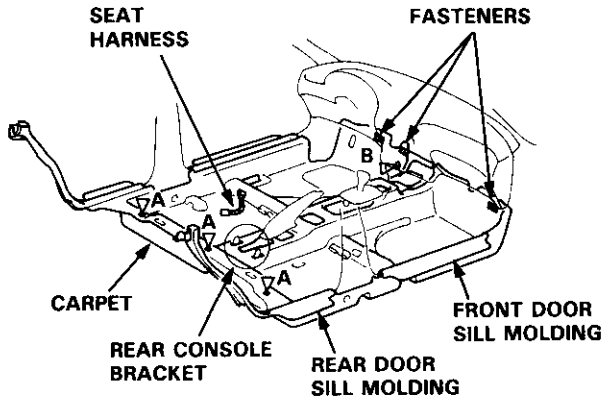

9. Installation is the reverse of the removal procedure.

NOTE:
- Take care not to damage, wrinkle or twist the carpet.
- Make sure the seat harness is routed correctly.
- Slip the slits in the carpet over the rear console bracket.

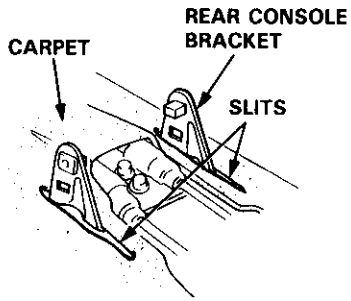

- Reattach the (A) cut area of the carpet (see page 20-126), as follows.

—1) Clean the back of the carpet with a sponge dampened in alcohol.
Attach the fasteners to the edge of the carpet with double-faced adhesive tape.

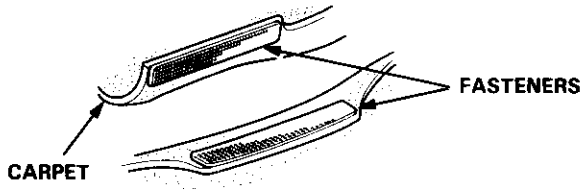

—2) Attach the other fastener, as shown.

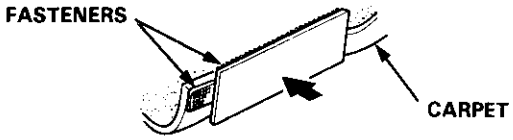

—3) Align the carpet with the fastener, then press the carpet down securely.

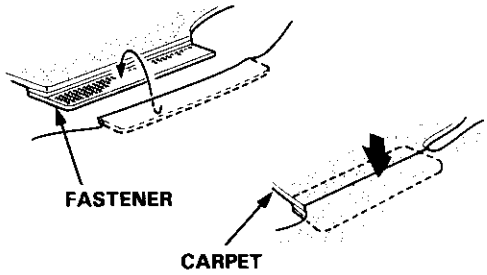

- Reattach the cut area under the parking brake lever and (B) cut area (see page 20-126) with wire ties, as shown.

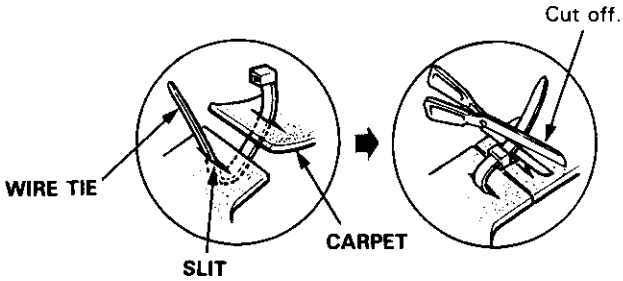

- If necessary, replace any damaged clips.

Replacement

SRS wire harnesses are routed near the front console.

CAUTION:
- **All SRS electrical wiring harnesses are covered with yellow insulation.**
- **Before disconnecting any part of the SRS wire harness, connect the short connectors (see page 20-272).**
- **Replace the entire affected SRS harness assembly if it has an open circuit or damaged wiring.**

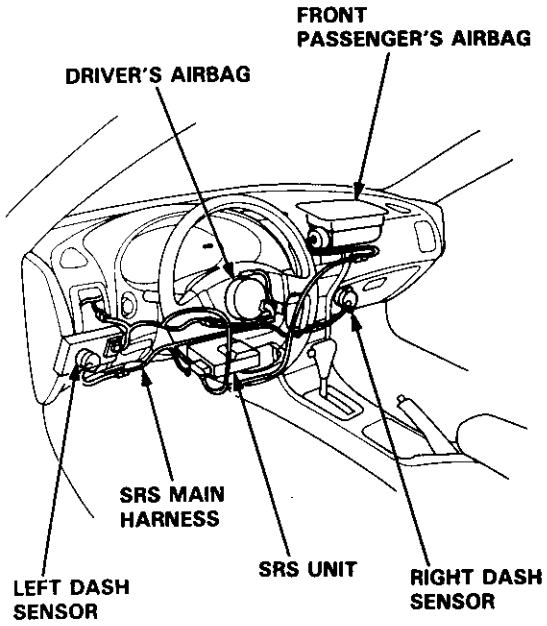

NOTE: Take care not to scratch the front and rear consoles, and dashboard.

1. Remove the access cap.

   CAUTION: When prying with a flat tip screwdriver, wrap it with protective tape to prevent damage.

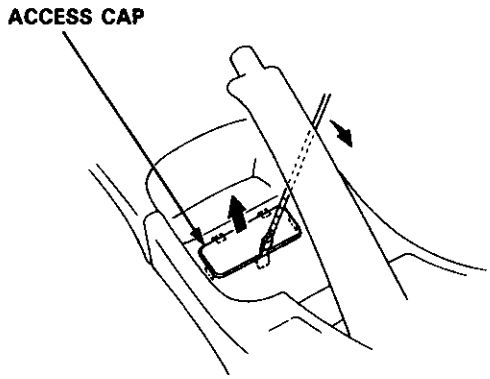

2. Remove the screws.

▼ : Screw locations

A▼ : Screw, 2 **B▼ : Screw, 2**

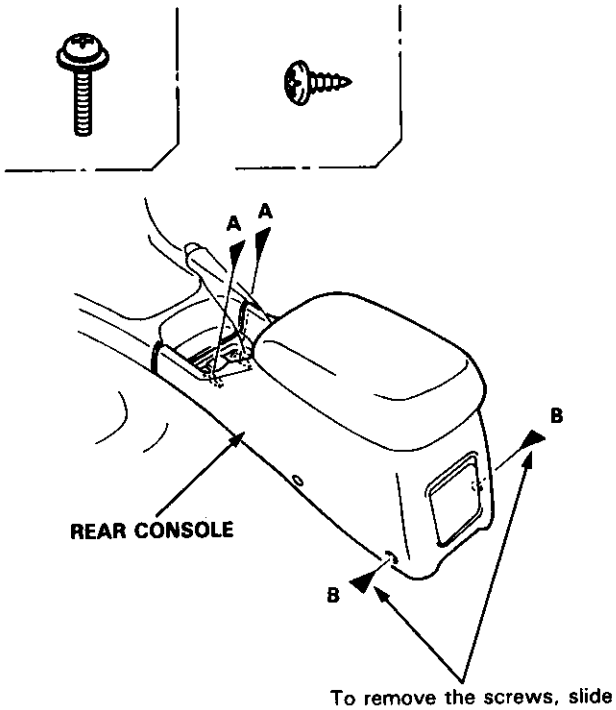

To remove the screws, slide the front seat forward.

3. Remove the rear console.

NOTE:
- Lift up the parking brake lever.
- Detach the hooks by lifting the front of the rear console and sliding it rearward.

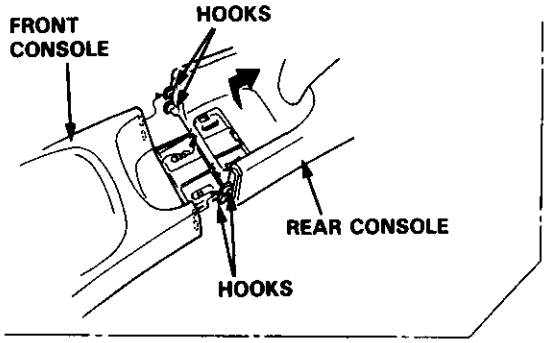

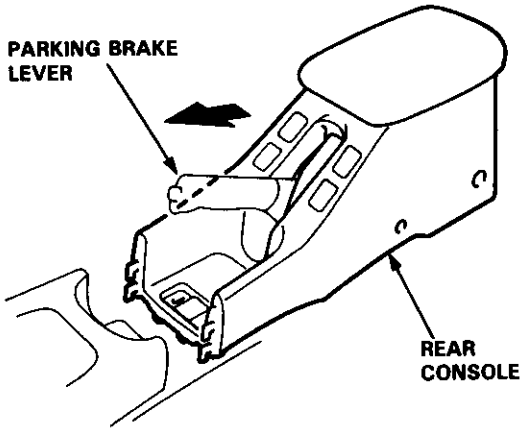

4. Remove the ashtray and front console panel.

▶ : Screw locations, 2

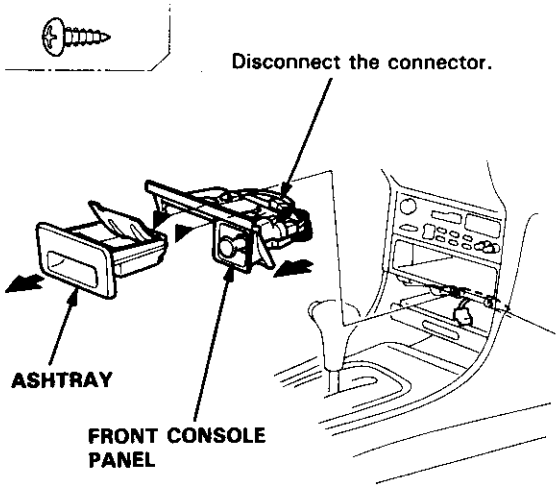

5. Remove the trim ring, then remove the console panel.

NOTE:
- Take care not to scratch the selecter lever and A/T gear position indicator panel.
- Remove the shift lever knob (M/T).

△ : Clip, hook locations

A△ : Clip, 2 B△ : Clip, 2 C△ : Hook, 2

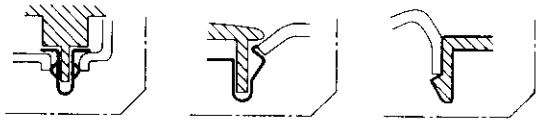

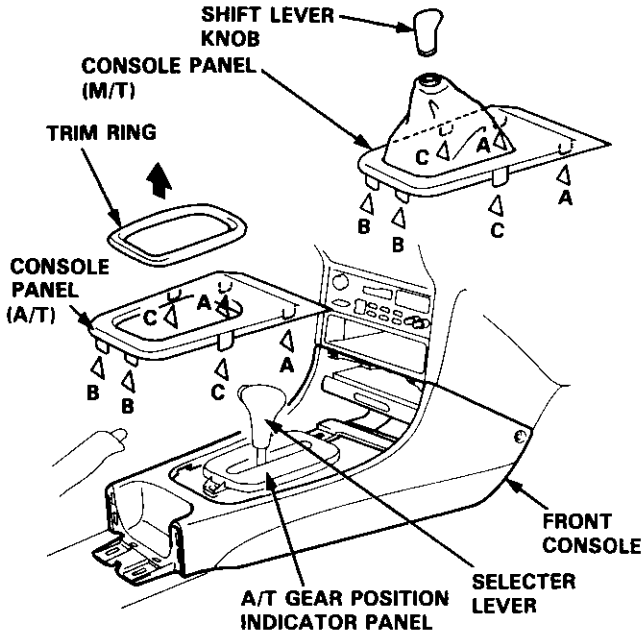

6. Remove the screws.

▶ : Screw locations, 4

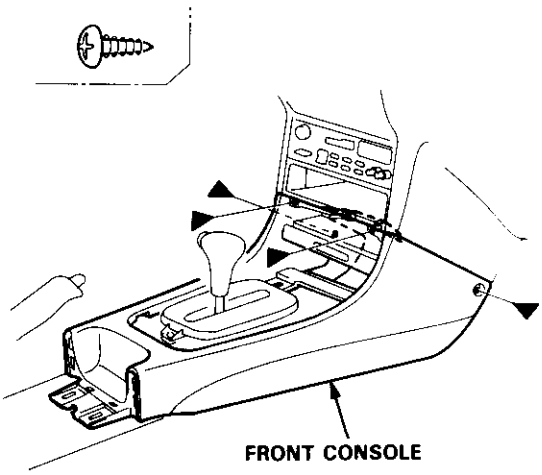

(cont'd)

Replacement (cont'd)

7. Remove the front console as shown.

   NOTE: Wrap the selecter lever and A/T gear position indicator panel with a shop towel to prevent damage.

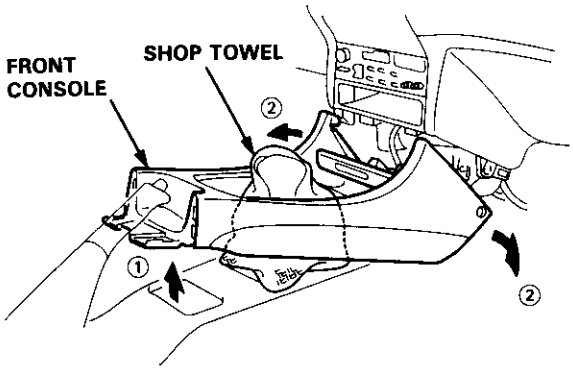

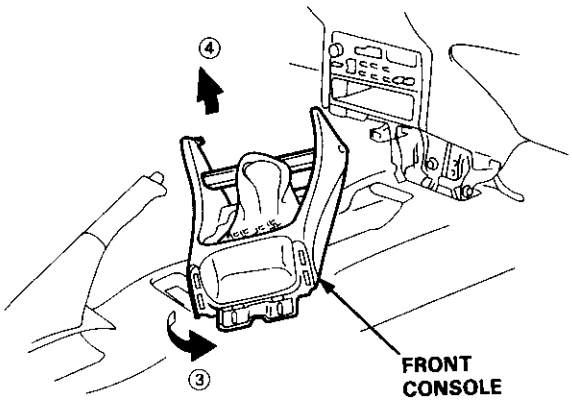

8. If necessary, disassemble the front and rear consoles.

▲ : Screw locations, 5

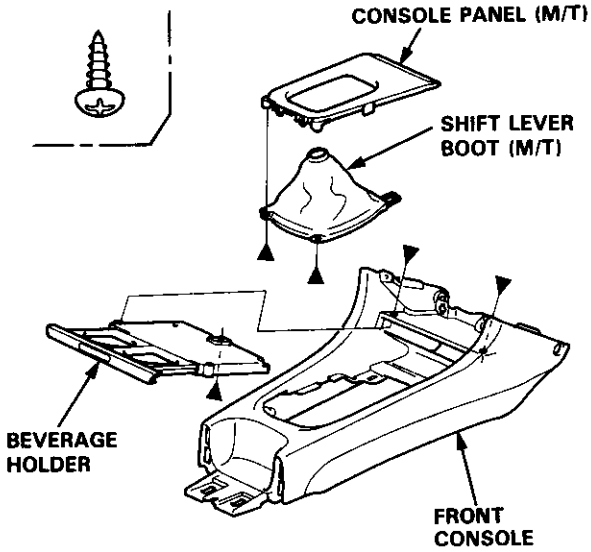

▲ : Screw locations, 9

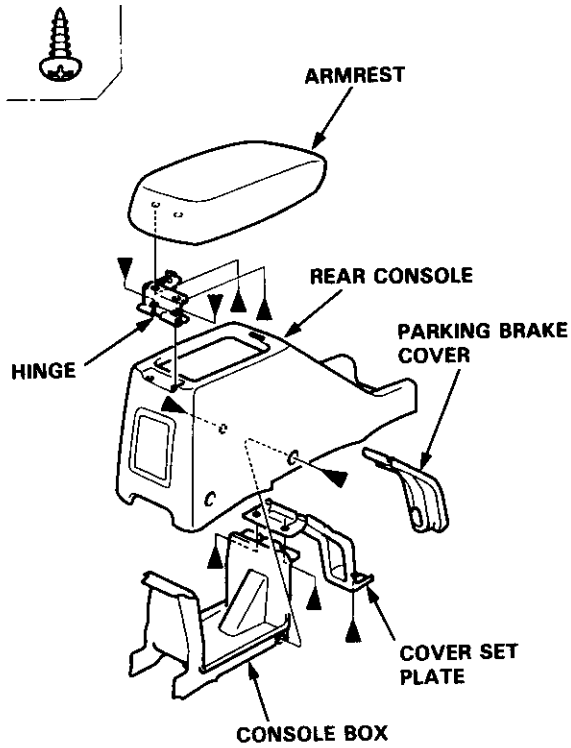

9. Installation is the reverse of the removal procedure.

Component Removal/Installation

SRS wire harnesses are routed near the dashboard and steering column.

CAUTION:
- **All SRS electrical wiring harnesses are covered with yellow insulation.**
- **Before disconnecting any part of the SRS wire harness, connect the short connectors (see page 23-272).**
- **Replace the entire affected SRS harness assembly if it has an open circuit or damaged wiring.**

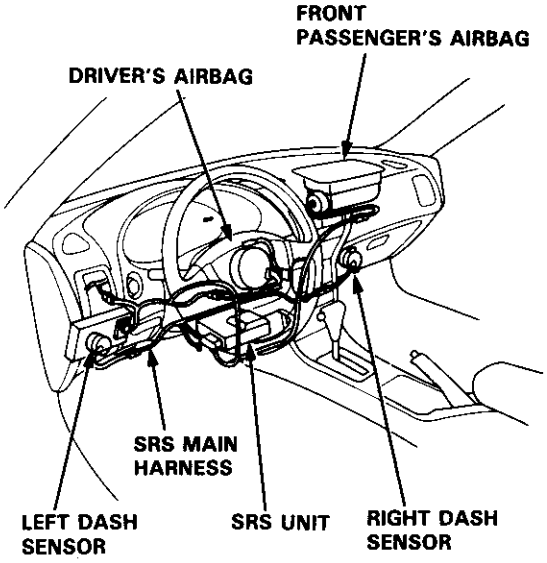

CAUTION: When prying with a flat tip screwdriver, wrap it with protective tape, and apply protective tape around the related parts, to prevent damage.

Instrument panel, Dashboad lower cover, Knee bolster removal:

1. Lower the steering column.
2. Remove the screws and detach the clips, then remove the instrument panel.
3. Remove the coin pocket.
4. Remove the screws and detach the clips, then remove the dashboard lower cover.
   Disconnect the connector.

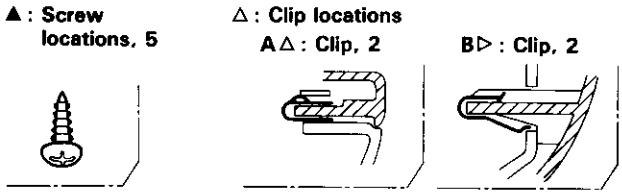

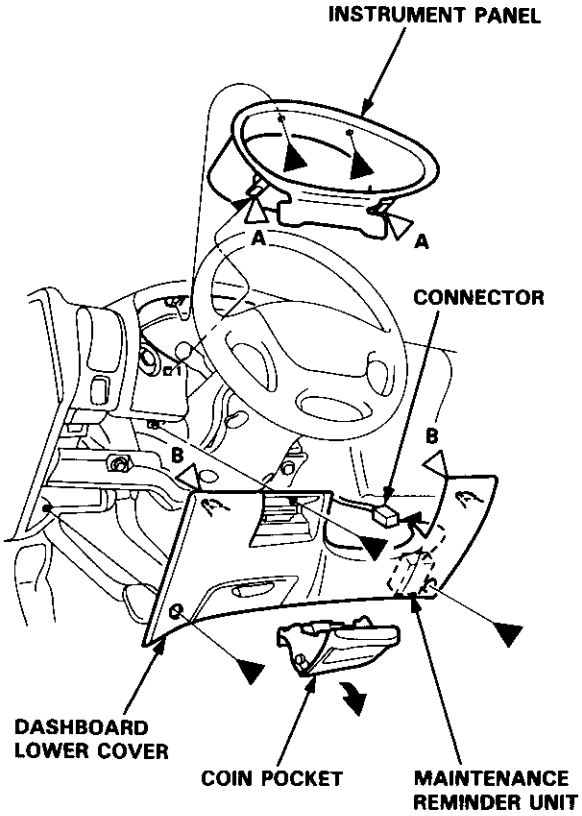

(cont'd)

Component Removal/Installation (cont'd)

5. Remove the knee bolster.

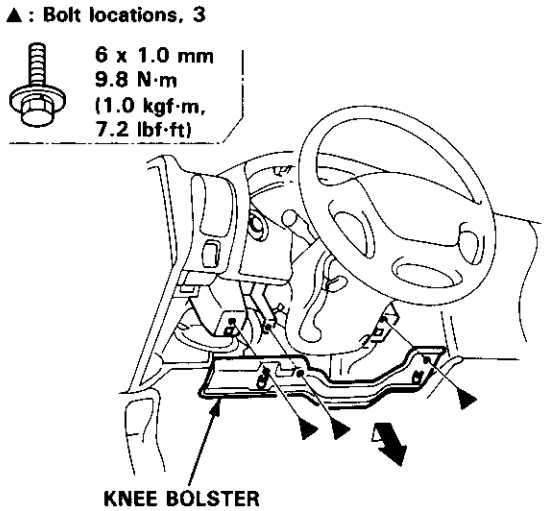

6. Installation is the reverse of the removal procedure.

Stereo radio/cassette, Heater control panel removal:

1. Remove the rear console, then remove the front console (see page 20-128).

2. Loosen the bolts, then remove the stereo radio/cassette by pulling it out.
   Disconnect the connector and antenna lead.

   NOTE: The original radio has a coded theft protection circuit. Be sure to get the customer's code number before
   - disconnecting the battery.
   - removing the No. 32 (7.5A) fuse from the underhood fuse/relay box.
   - removing the radio.

   After service, reconnect power to the radio and turn it on. When the word "CODE" is displayed, enter the customer's 5-digit code to restore radio operation.

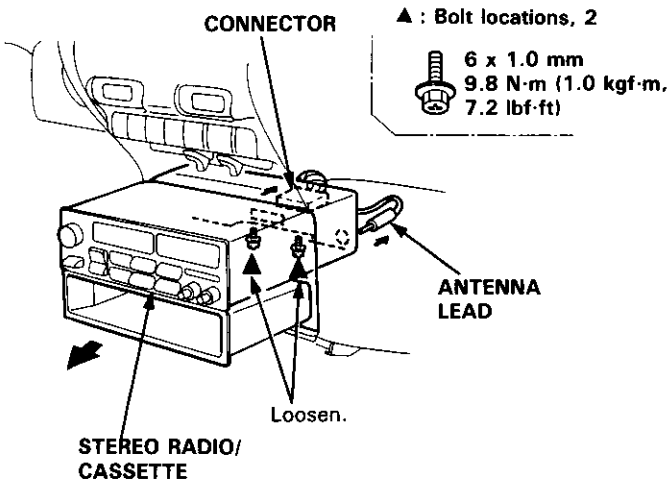

3. Carefully pry the hazard warning switch and rear window defogger switch out of the heater control panel.
   Disconnect the connectors.

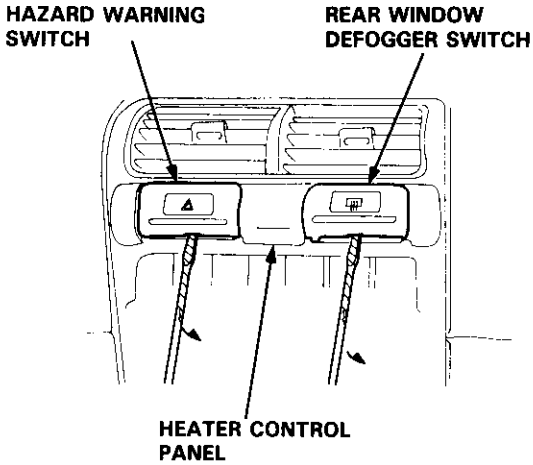

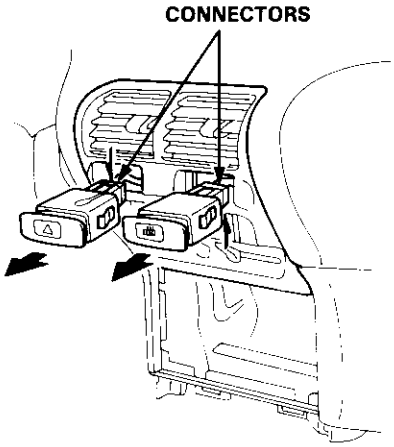

4. Remove the screws.
   Detach the harness clip and connector clip.

▶ : **Screw locations, 2**

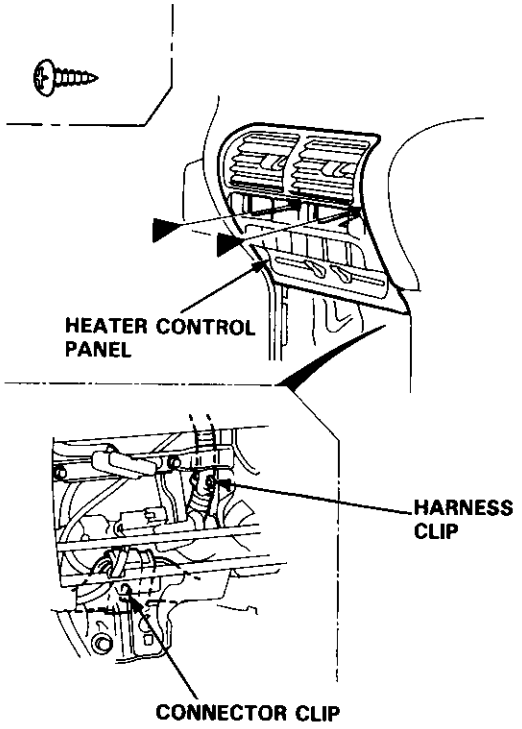

5. Disconnect the air mix control cable from the heater unit.

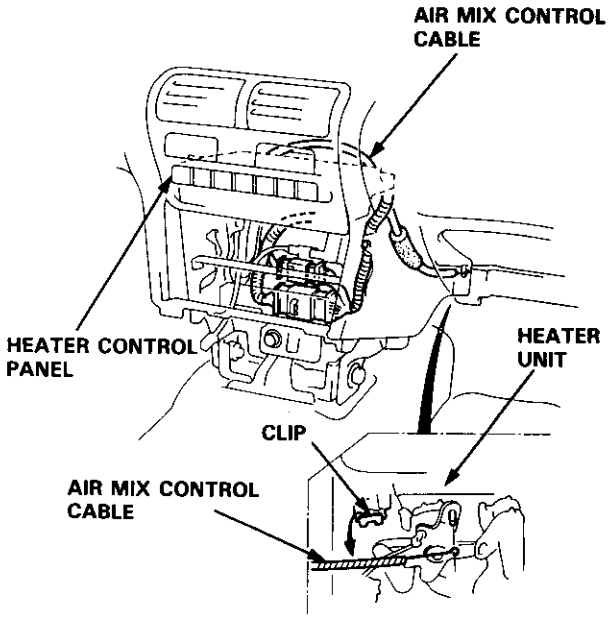

6. Pull the heater control panel out, then disconnect the connectors.

   NOTE: Take care not to bend the air mix control cable.

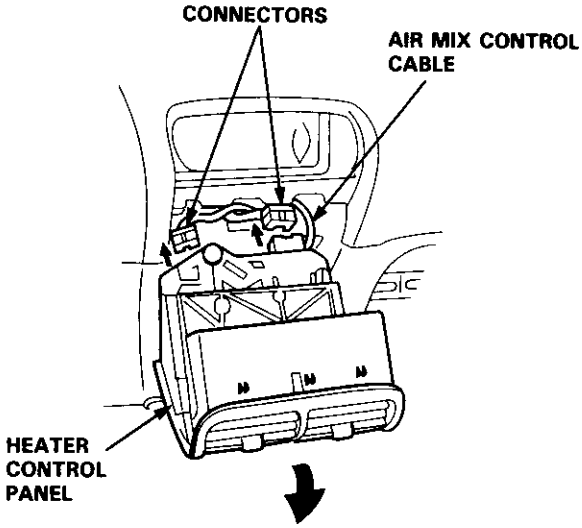

7. Installation is the reverse of the removal procedure.

   NOTE: Make sure the connector and air mix control cable are connected properly.

(cont'd)

Component Removal/Installation (cont'd)

Side air vent removal:

Driver's

1. Remove the dashboard lower cover (see page 20-131).
2. Carefully pry the moonroof switch out of the side air vent, then disconnect the connector.

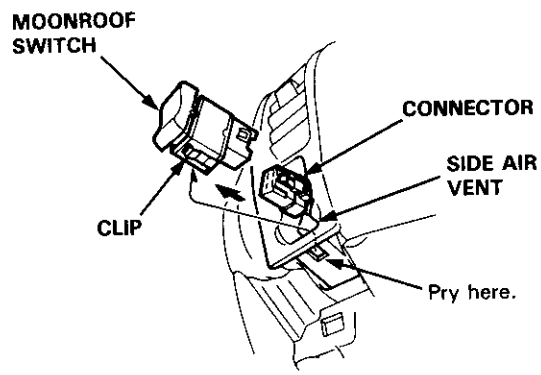

3. Remove the screw, then remove the side air vent.

▶ : Screw location, 1

◁ : Clip, hook locations

A◁ : Clip, 1

B▽ : Hook, 3

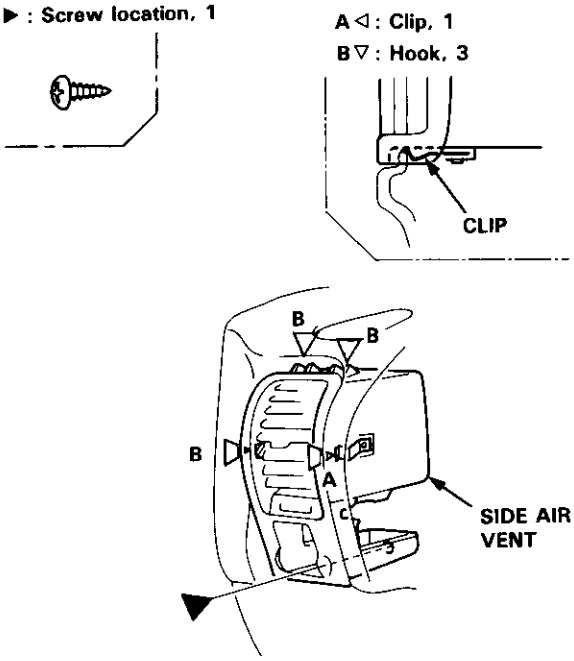

4. Installation is the reverse of the removal procedure.

   NOTE: Make sure the connector is connected properly.

Front passenger's

Carefully pry the side air vent at the lower edge, then pull it out.

△ : Clip, hook locations

A△ : Clip, 1 B▽ : Hook, 2

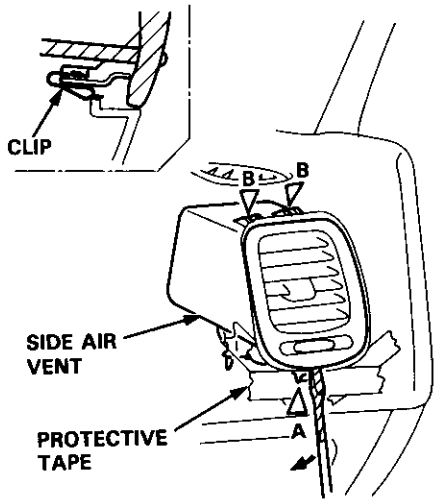

Side defogger trim removal:

Carefully pry the side defogger trim at the rear edge, then remove it.

△ : Clip, hook locations

A△ : Clip,1 B △ : Hook, 1

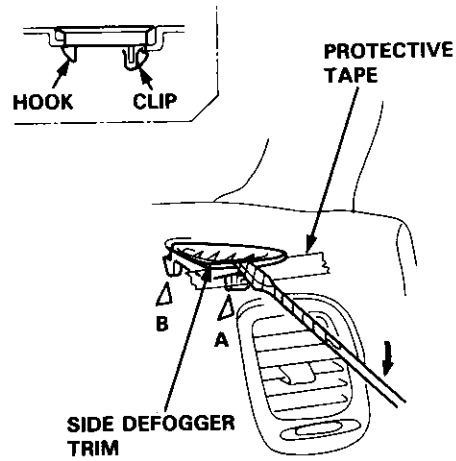

Clock removal:

Carefully pry the clock at the left edge, then pull it out. Disconnect the connector.

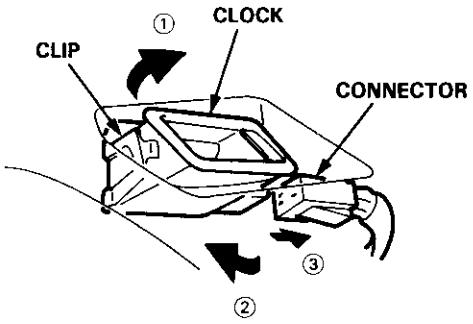

Glove box removal:

1. Open the glove box.
2. Remove the screw, then remove the damper from the glove box.
3. Remove the screw, then remove the glove box.

▲: Bolt, screw locations

A▲: Bolt, 2 **B◀: Screw, 1**

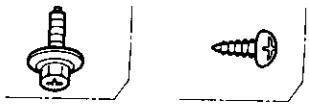

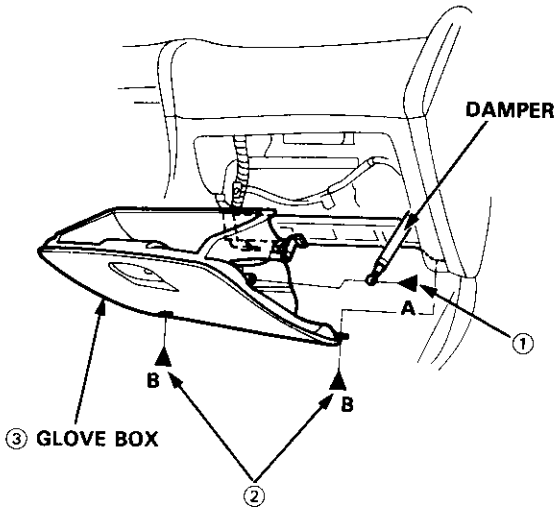

4. Remove the damper and striker.

▶: Nut, screw locations

A▶: Nut, 1 **B▲: Screw, 2**

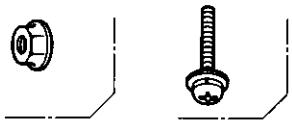

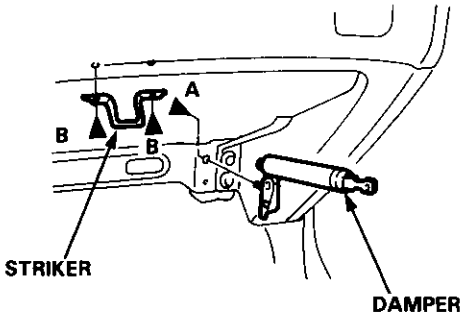

5. Installation is the reverse of the removal procedure.

Replacement Precautions

SRS wire harnesses are routed near the dashboard and steering column.

CAUTION:
- **All SRS electrical wiring harnesses are covered with yellow insulation.**
- **Before disconnecting any part of the SRS wire harness, connect the short connectors (see page 23-272).**
- **Replace the entire affected SRS harness assembly if it has an open circuit or damaged wiring.**

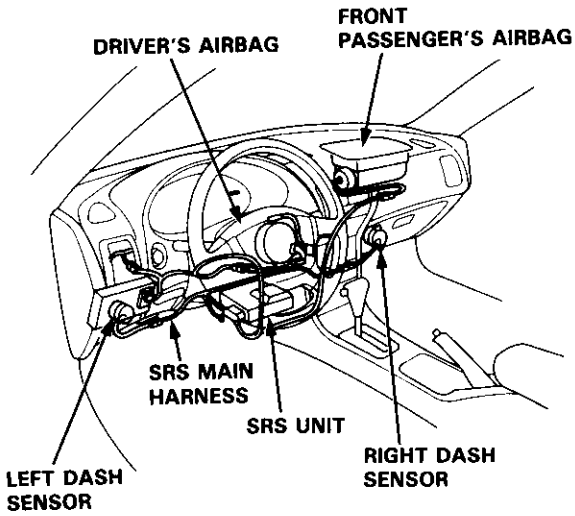

Before removing the dashboard:

WARNING To avoid accidental deployment and possible injury, always install the protective short connectors on the driver's and front passenger's airbag connectors before working near any SRS wiring.

1. Disconnect the battery negative cable, then disconnect the positive cable.

   NOTE: The original radio has a coded theft protection circuit. Be sure to get the customer's code number before
   - disconnecting the battery.
   - removing the No. 32 (7.5A) fuse from the underhood fuse/relay box.
   - removing the radio.

   After service, reconnect power to the radio and turn it on. When the word "CODE" is displayed, enter the customer's 5-digit code to restore radio operation.

2. Install the short connectors (RED).

   Driver's:
   Remove the access panel, then disconnect the connector between the cable reel and driver's airbag. Connect the short connector (RED) to the driver's airbag connector (see page 23-272).

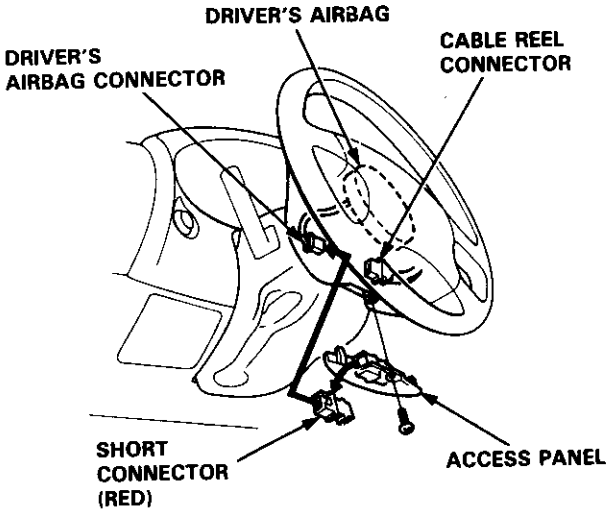

   Front passenger's:
   Remove the glove box (see page 20-135), then disconnect the connector between the front passenger's airbag and SRS main harness. Connect the short connector (RED) to the front passenger's airbag connector (see page 23-273).

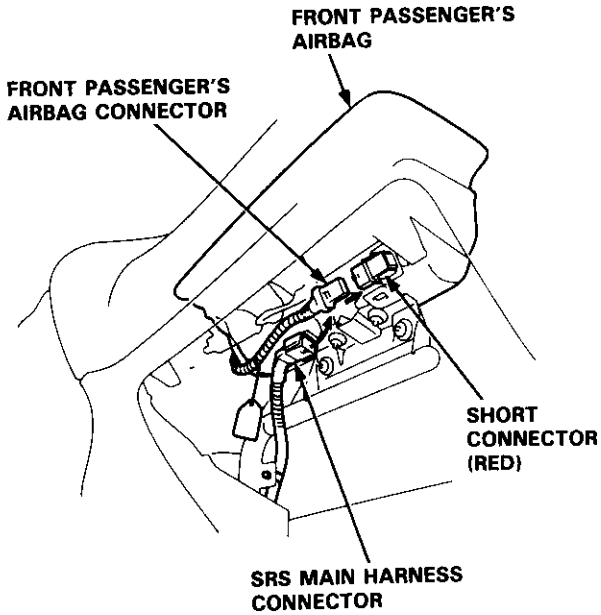

Replacement

1. To remove the dashboard, first remove the:

   - Front seats (see page 20-103)
   - Front and rear consoles (see page 20-128)
   - Dashboard lower cover (see page 20-131)
   - Knee bolster (see page 20-132)
   - Glove box (see page 20-135)
   - Clock (see page 20-135)
   - Moonroof switch (see page 20-134)
   - Stereo radio/cassette (see page 20-132)

2. Lower the steering column (see section 17).

   ⚠WARNING ***To avoid accidental deployment and possible injury, always install the protective short connector on the driver's airbag connector before lowering the steering column (see page 20-136).***

   NOTE: To prevent damage to the steering column, wrap it with a shop towel.

▲: Bolt, nut locations

A▲: Bolt, 2

8 x 1.25 mm
22 N·m (2.2 kgf·m, 16 lbf·ft)

B▲: Nut, 2

8 x 1.25 mm
13 N·m (1.3 kgf·m, 9 lbf·ft)
Replace.

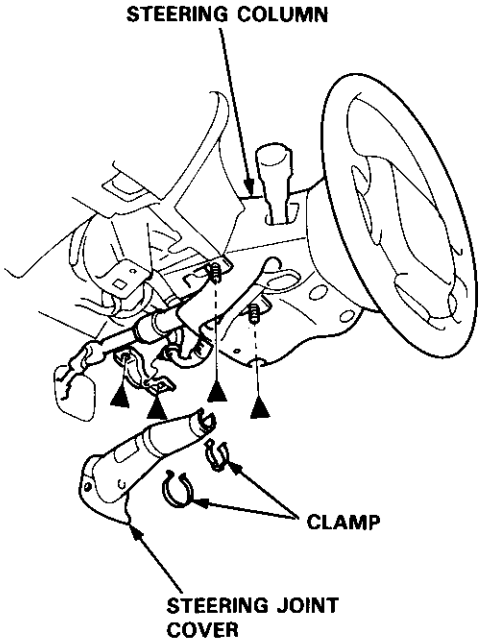

3. Remove the nuts, then remove the front passenger's airbag bracket.

   ⚠WARNING **To avoid accidental deployment and possible injury, always install the protective short connector on the front passenger's airbag connector when the SRS main harness is disconnected (see page 20-136).**

▲: Nut locations, 4

6 x 1.0 mm
9.8 N·m (1.0 kgf·m, 7.2 lbf·ft)

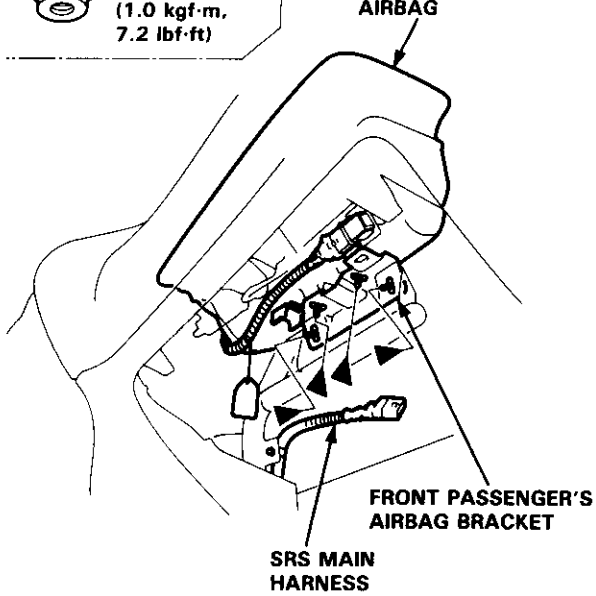

4. Disconnect the air mix control cable and connectors.

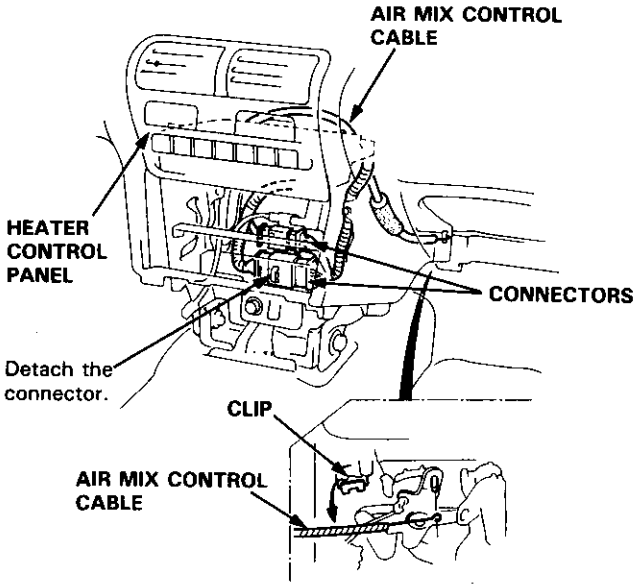

(cont'd)

Replacement (cont'd)

5. Disconnect the antenna lead.

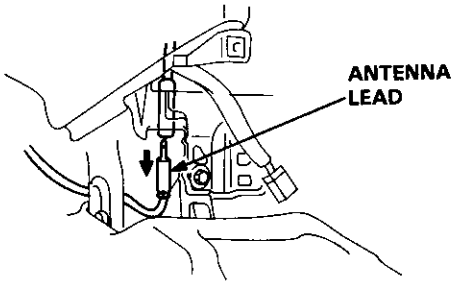

6. Disconnect the connectors from the under-dash fuse/relay box.

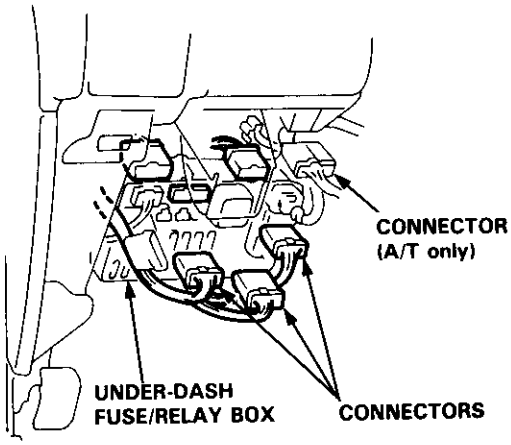

7. Remove the access panels on both sides.

CAUTION: When prying with a flat tip screwdriver, wrap it with protective tape to prevent damage.

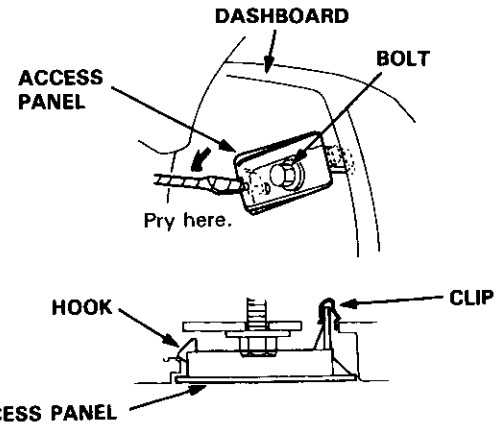

8. Remove the bolts, then lift and remove the dashboard.

CAUTION: Use protective tape on the bottom of the front pillar trim.

NOTE:
- Take care not to scratch the dashboard.
- To prevent damage to the shift lever (M/T) or selecter lever and A/T gear position indicator panel (A/T), wrap them with a shop towel.

▼ : Bolt locations, 6

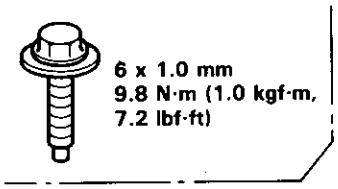

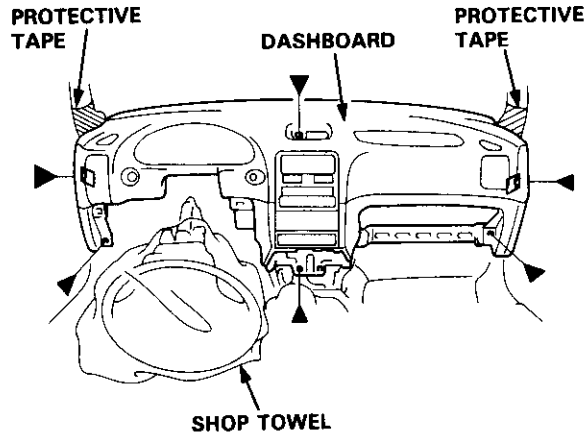

9. Installation is the reverse of the removal procedure.

NOTE:
- Make sure the dashboard fits onto the body correctly.
- Before tightening the bolts, make sure the dashboard wire harnesses are not pinched, and that the dashboard is not interfering with the air mix control cable.

Front Bumper Replacement

NOTE:
- An assistant is helpful when removing the front bumper and front bumper beam.
- Take care not to scratch the front bumper.
- Open the hood.

1. Remove the front turn signal light, then disconnect the connectors on each side.

◀ : Screw locations, 2

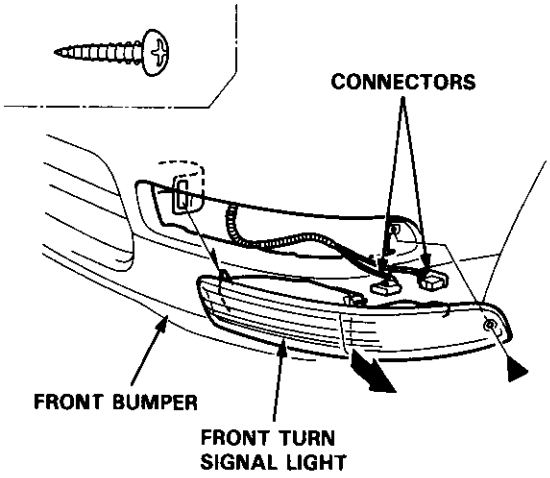

2. Pull the inner fender down, then remove the screws from the front bumper and lower bumper on each side.

▲ : Screw locations

A▲ : Screw, 2 B▲ : Screw, 2

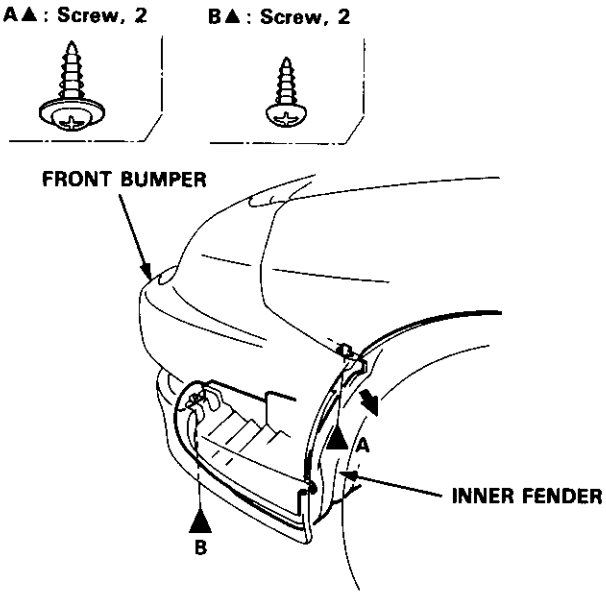

3. Remove the bolts, then remove the front bumper.

▼ : Bolt locations △ : Clip locations, 2

A▼ : Bolt, 9 B▼ : Bolt, 2

6 x 1.0 mm
9.8 N·m (1.0 kgf·m, 7.2 lbf·ft)

6 x 1.0 mm
9.8 N·m (1.0 kgf·m, 7.2 lbf·ft)

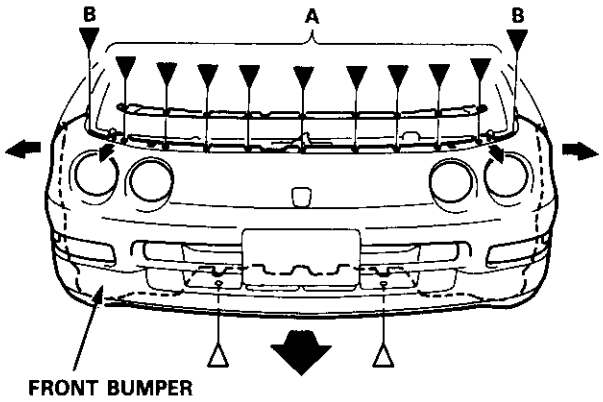

NOTE: If necessary, disassemble the front bumper.

▶ : Bolt, screw locations

A▶ : Bolt, 2 B▶ : Bolt, 5 C▼ : Bolt, 8 D◀ : Screw, 8

△ : Clip locations

A△ : Clip, 2 B△ : Clip, 4

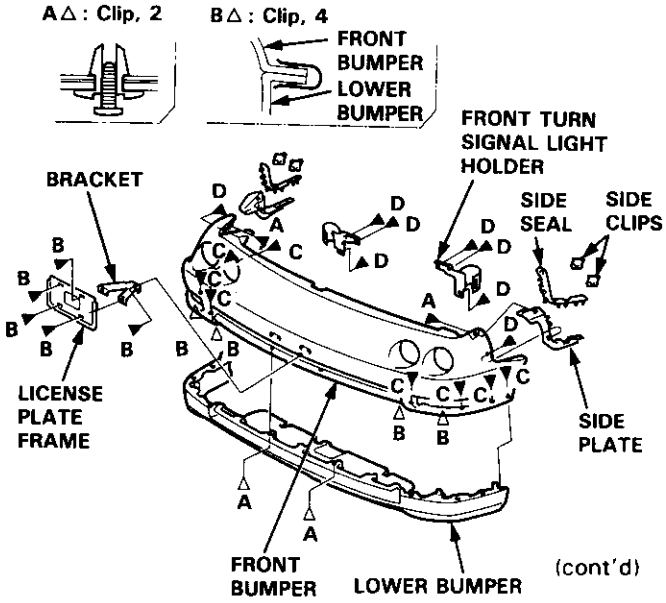

(cont'd)

Front Bumper Replacement (cont'd)

4. Remove the absorber and bumper beam gusset on each side, then remove the front bumper beam.

▲: Bolt locations, 4

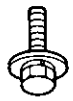

8 x 1.25 mm
22 N·m (2.2 kgf·m, 16 lbf·ft)

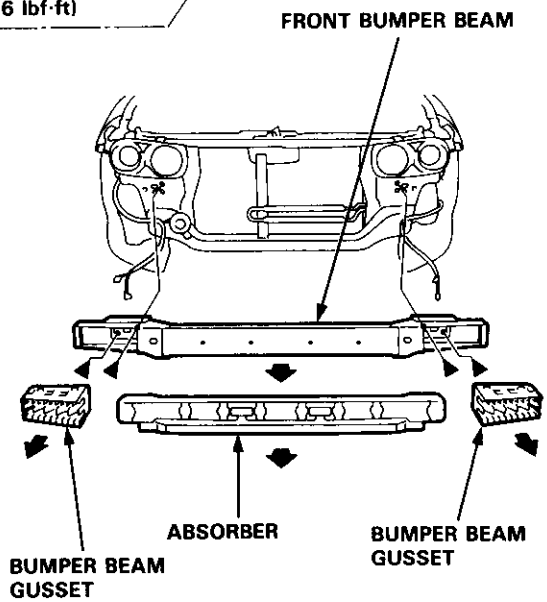

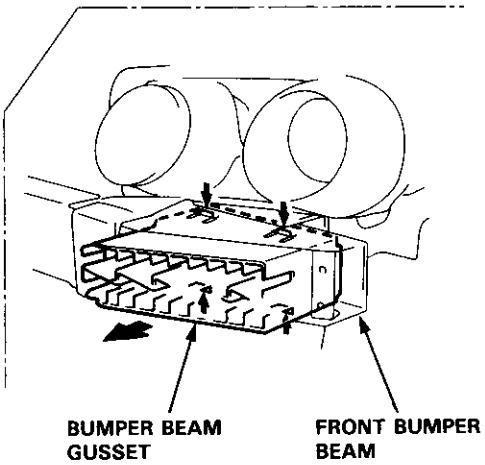

5. Installation is the reverse of the removal procedure.

NOTE:
- Install the holes in the front bumper beam over the hooks on the body.

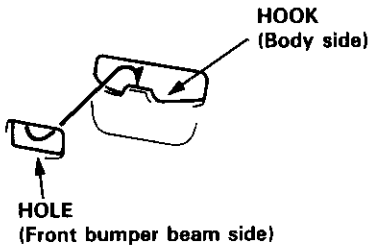

- Align the front bumper side clips with the front fender properly, then install the front bumper.

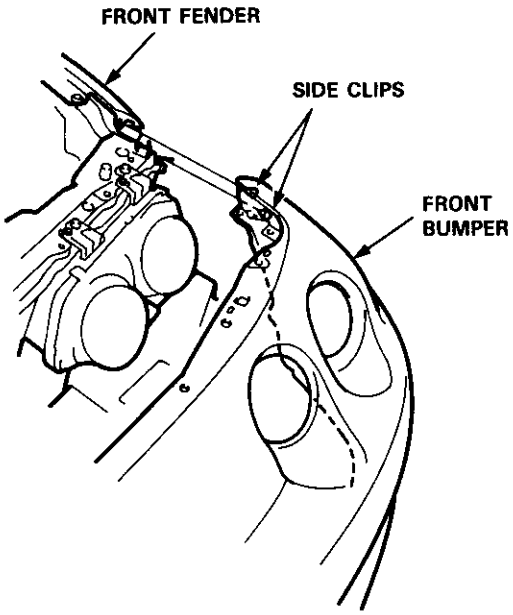

- Make sure the connector is connected properly.

Rear Bumper Replacement

NOTE:
- An assistant is helpful when removing the rear bumper and rear bumper beam.
- Take care not to scratch the rear bumper.

Hatchback

1. Remove the screw from each side.

▲ : Screw locations, 2

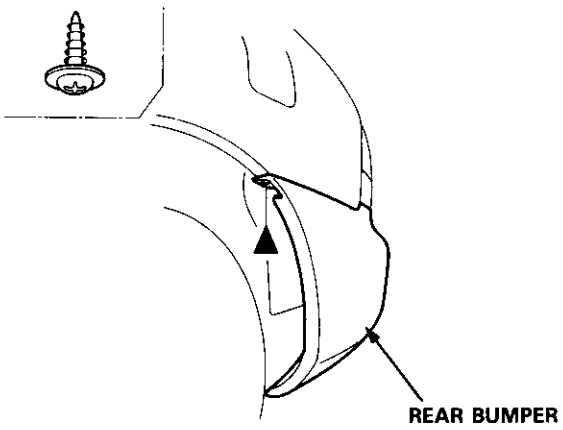

2. Open the hatch, then remove the rear trim panel (see page 20-92).

3. Remove the nuts, and disconnect the license plate light connector and grommet.

▶ : Nut locations, 4

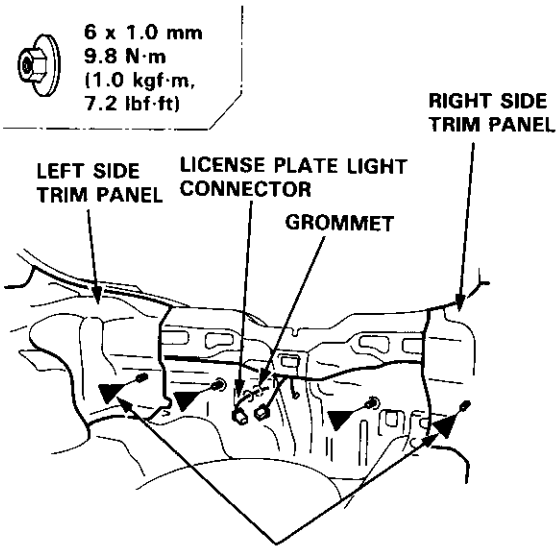

To remove the nuts, remove the rear portion of the side trim panel on each side (see page 20-92).

4. Remove the bolts, then remove the rear bumper.

▲ : Bolt locations, 2

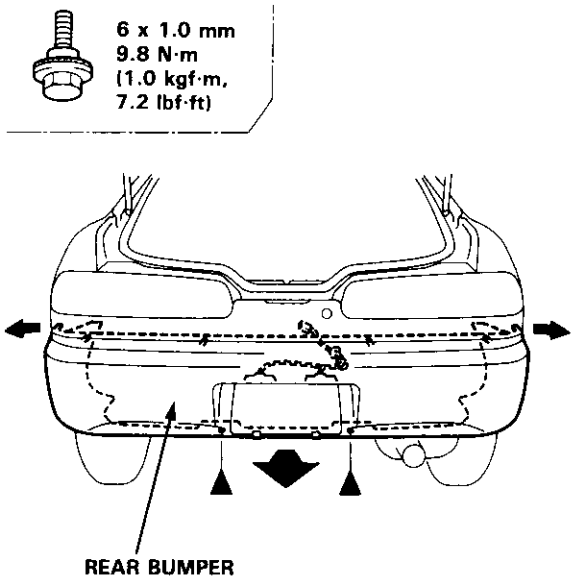

5. If necessary, remove the bumper upper beam from the rear bumper.

▲ : Screw locations

A ▲ : Screw, 4 B ◀ : Screw, 4 ▽ : Clip locations, 9

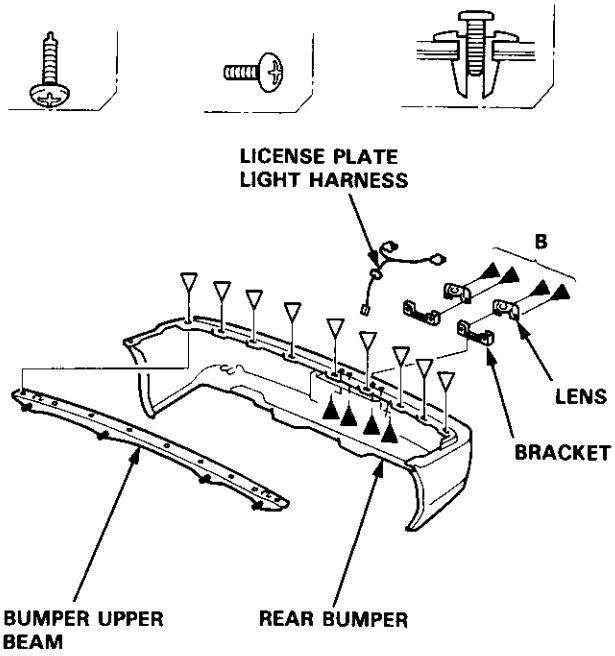

(cont'd)

Rear Bumper Replacement (cont'd)

6. Remove the absorber, bumper beam gusset and rear bumper beam.

▼ : Bolt locations, 4

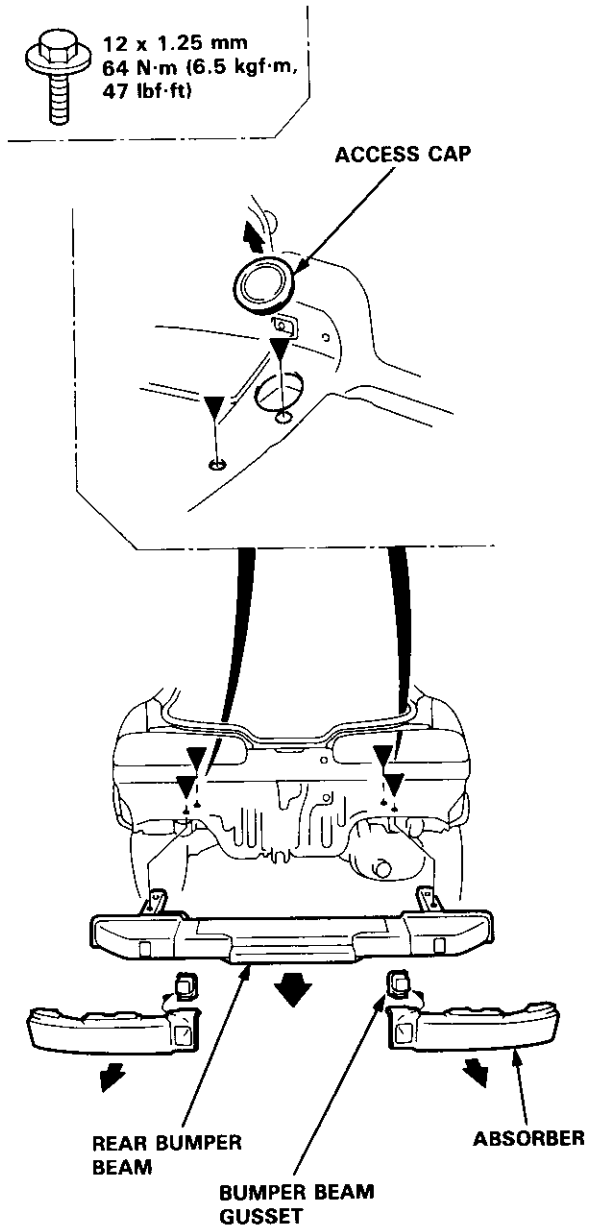

7. Installation is the reverse of the removal prcedure.

   NOTE: Make sure the license plate light connector is connected, and the grommet is installed properly.

Sedan

1. Remove the screw from each side.

▲ : Screw locations, 2

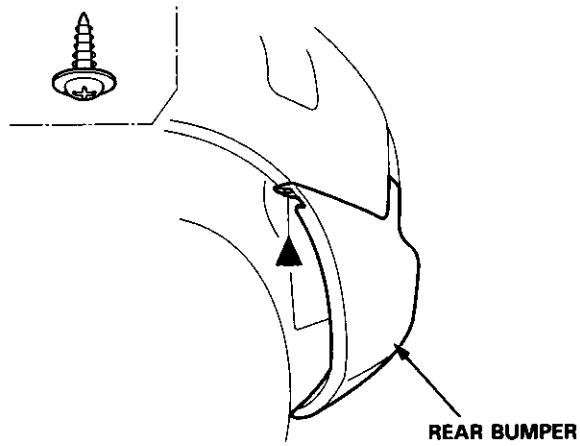

2. Open the trunk lid, then remove the rear trim panel (see page 20-97).

3. Disconnect the license plate light connector and grommet from the rear trunk area. Remove the clips and bolts, then remove the rear bumper.

▽ : Clip locations, 5 ▲ : Bolt locations, 2

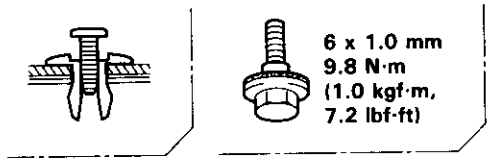

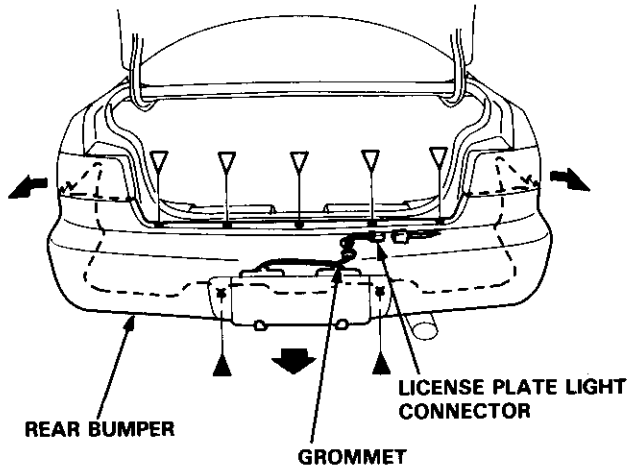

4. If necessary, remove the license plate light harness, bracket and lens from the rear bumper (see page 20-141).

5. Remove the absorber, bumper beam gusset and rear bumper beam.

▼ : Bolt locations, 4

12 x 1.25 mm
64 N·m (6.5 kgf·m, 47 lbf·ft)

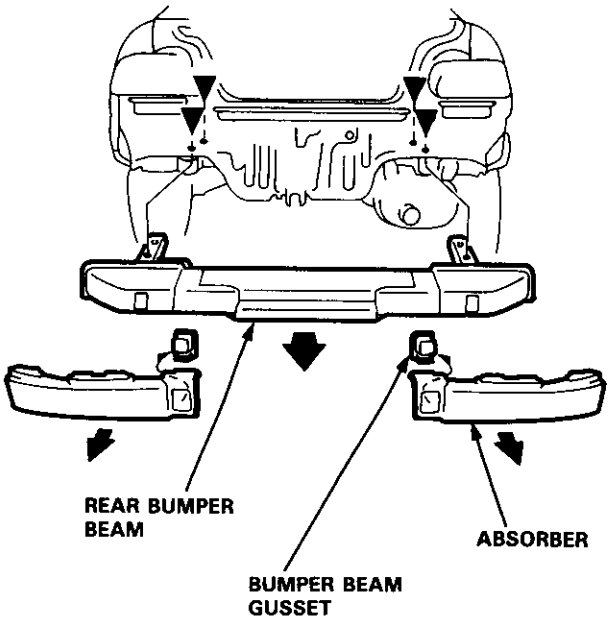

6. Installation is the reverse of the removal procedure.

NOTE:
- Make sure the license plate light connector is connected, and the grommet is installed properly.
- Make sure the rear bumper engages the side clips securely.

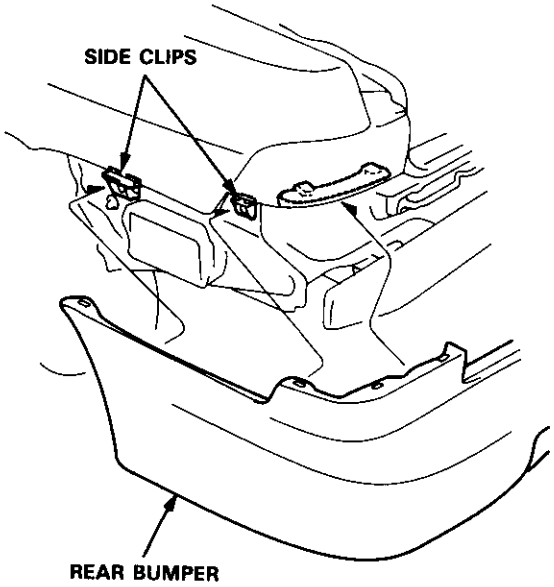

Hood

Replacement

NOTE:
- An assistant is helpful when removing the hood.
- Take care not to damage the hood and body.
- When removing the clips, use a clip remover.
- Open the hood.

1. If necessary, remove the hood edge protector.

△ : **Clip locations, 16**

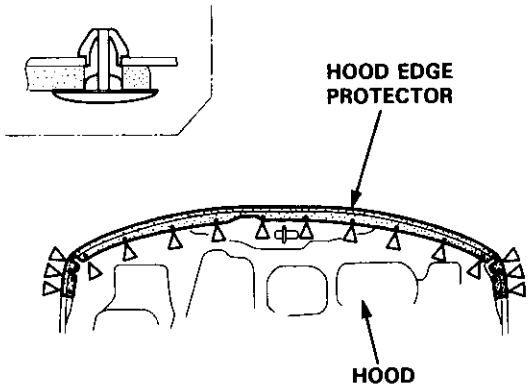

2. Remove the bolts, then remove the hood.

▲ : **Bolt locations, 4**

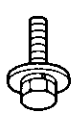

6 x 1.0 mm
9.8 N·m
(1.0 kgf·m,
7.2 lbf·ft)

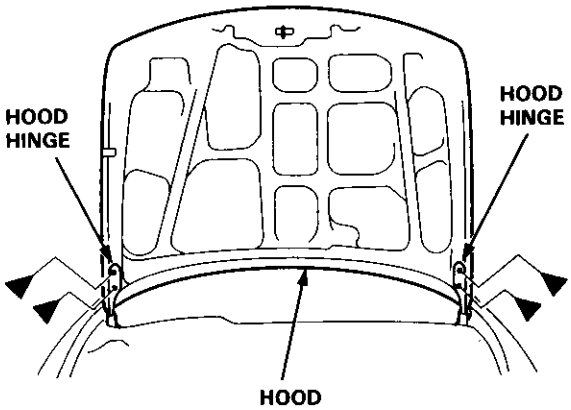

NOTE: If necessary, remove the hood hinge.

▼ : **Bolt locations, 4**

6 x 1.0 mm
9.8 N·m (1.0 kgf·m,
7.2 lbf·ft)

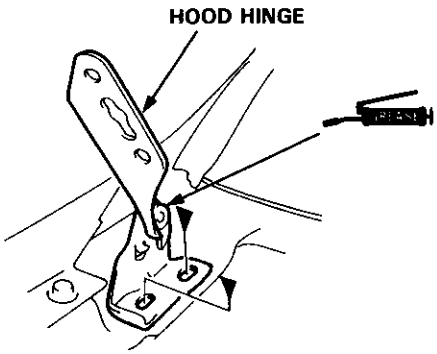

3. Installation is the reverse of the removal procedure.

NOTE:
- If necessary, replace any damaged clips.
- Make sure the hood locks securely.
- Make sure the hood opens properly.
- Adjust the hood alignment (see page 20-145).

Adjustment

NOTE: Before adjusting the hood, loosen each bolt slightly.

1. Adjust the hood hinges right and left as well as fore and aft by using the elongated holes.
2. Turn the hood edge cushions, as necessary, to make the hood fit flush with the body at front and side edges.
3. Adjust the hood latch to obtain the proper height at the forward edge.

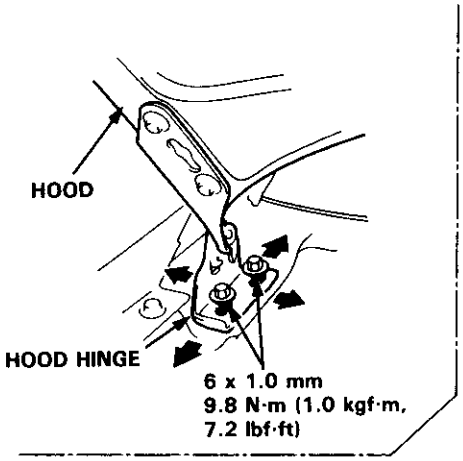

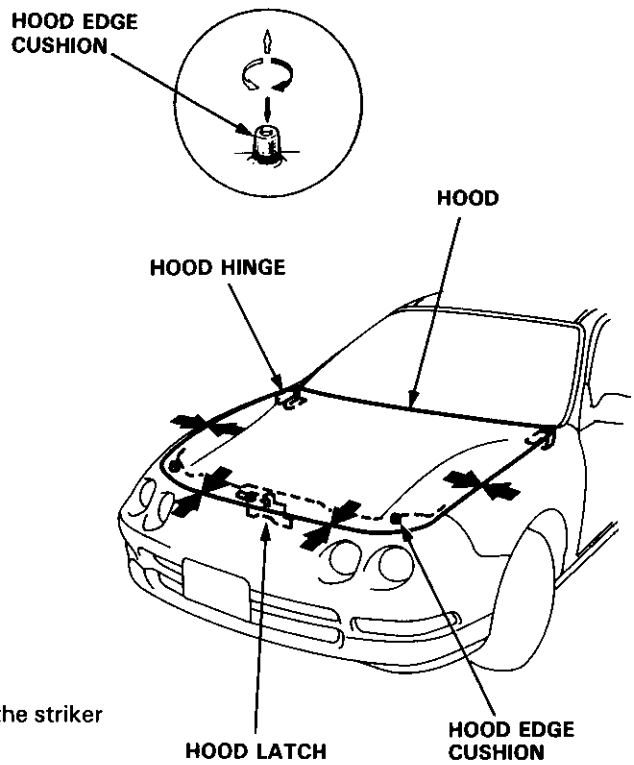

NOTE: Move the hood latch right or left until the striker is centered in the hood latch, as shown.

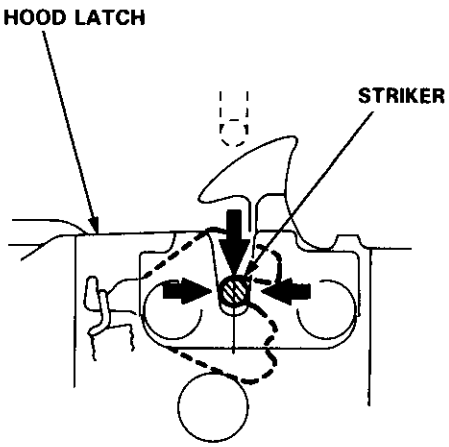

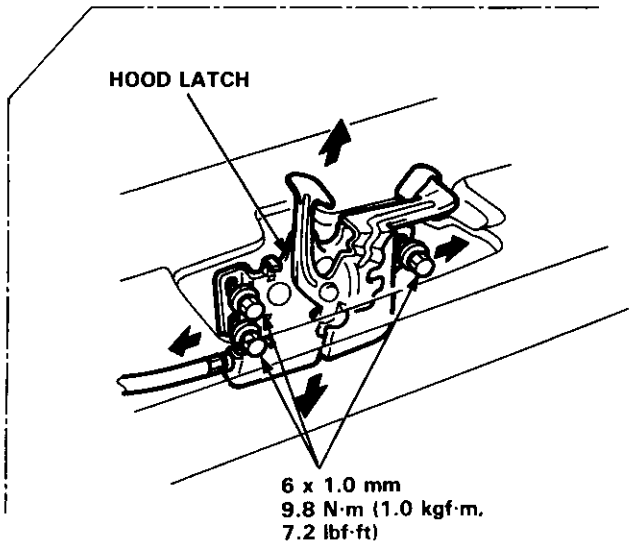

4. After adjustment, tighten each bolt securely.

Replacement

NOTE:
- An assistant is helpful when removing the hatch.
- Take care not to damage the hatch and body.
- Take care not to scratch the hatch side trims and hatch trim panel.
- Open the hatch.
- Remove the high mount brake light (see section 23).

1. Remove the hatch side trim on each side.

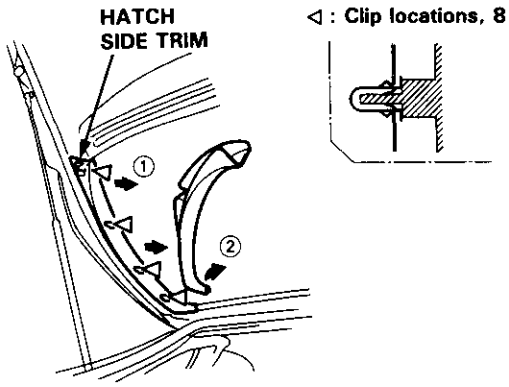

2. Remove the hatch trim panel.

△ : Clip locations

A△ : Clip, 11 B▽ : Clip, 3

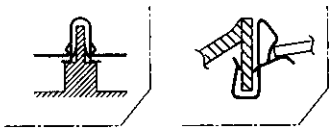

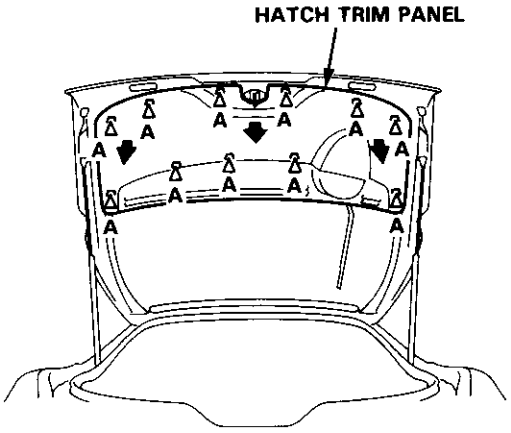

NOTE: Detach the clips by sliding the hatch trim panel forward, then remove it.

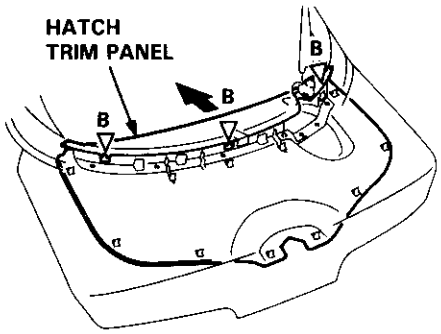

3. Remove the hatch spoiler as described on page 20-159 (for some type).

4. Disconnect the connectors, then remove the wire harnesses from the hatch.

▲ : Special bolt locations, 2 ▽ : Clip locations A▽ : Clip, 3 B△ : Clip, 6

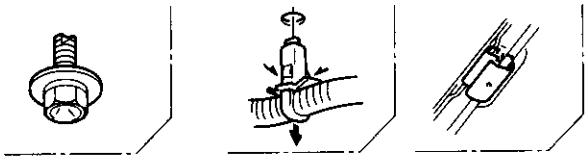

NOTE: Before pulling out the wire harness, tie a string to the end of it so you can pull it back in when the hatch is reinstalled.

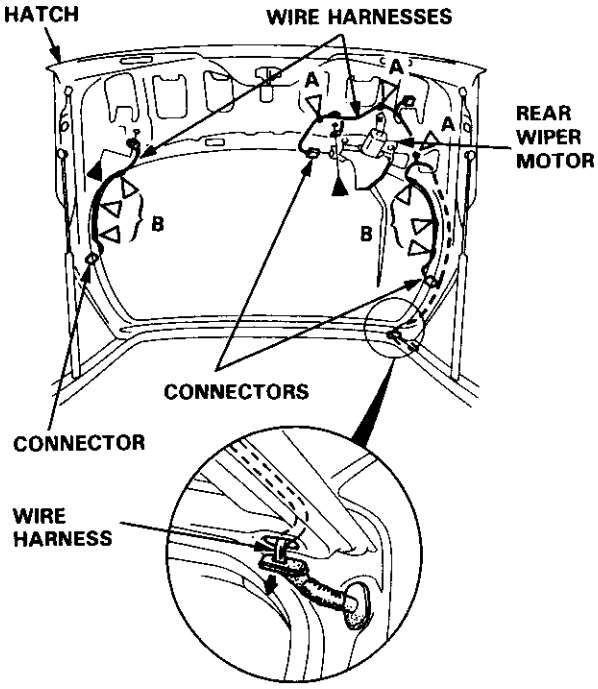

5. Remove the rear wiper motor (see section 23).

6. Remove the upper anchor bolts from the front and rear seat belts (see pages 20-115, 119), then remove the upper portion of the quarter pillar trim panel (see page 20-99).

7. Remove the rear roof trim, then pull the rear of the headliner down (see page 20-99).

   NOTE: Take care not to bend the headliner.

8. Remove the support strut on each side while holding the hatch.

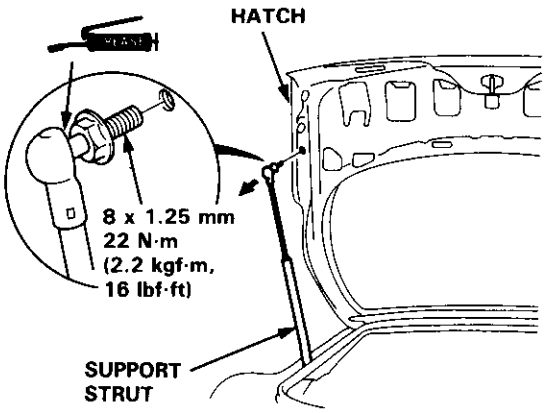

9. Remove the nuts, then remove the hatch.

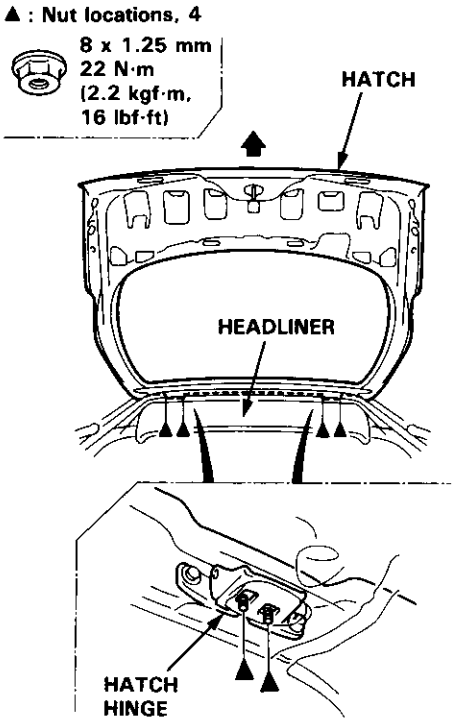

NOTE:
- If necessary, replace the support strut.
- When scrapping the support strut, dispose it as described on page 20-149.

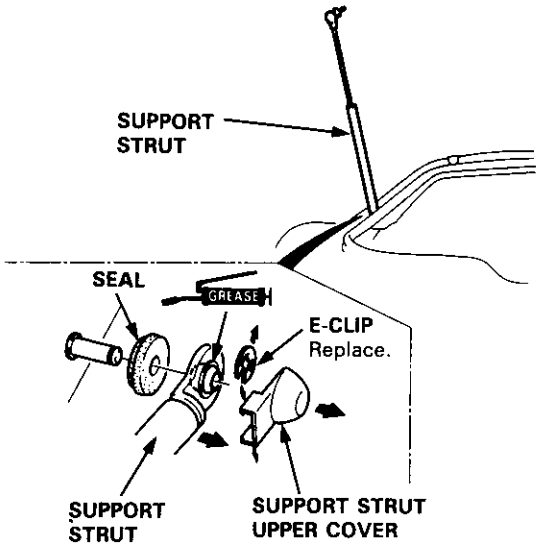

- If necessary, remove the hatch hinge.

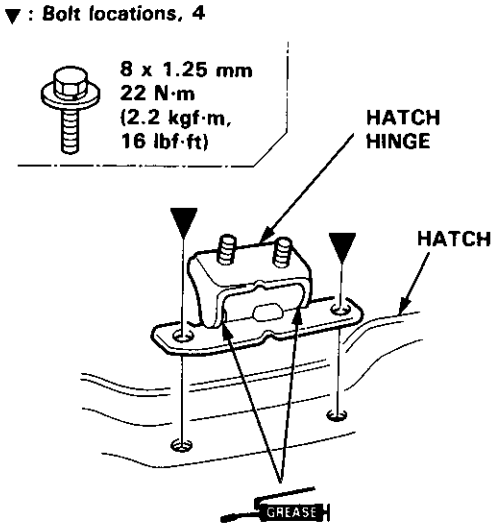

10. Installation is the reverse of the removal procedure.

    NOTE:
    - If necessary, replace any damaged clips.
    - Make sure the connectors are connected properly.
    - Make sure the hatch locks securely.
    - Make sure the hatch opens properly.
    - Adjust the hatch alignment (see page 20-148).

Adjustment

NOTE:
- Before adjusting the hatch, loosen each bolt and nut slightly.
- Do not install the support struts.

1. Adjust the hatch hinges right and left as well as fore and aft by using the elongated holes.
2. Turn the hatch edge cushions, as necessary, to make the hatch fit flush with the body at each side.
3. Adjust the hatch fit to the hatch opening by moving the striker.
4. Use shims, as necessary, to make the hatch fit flush with the body at the rear edge.

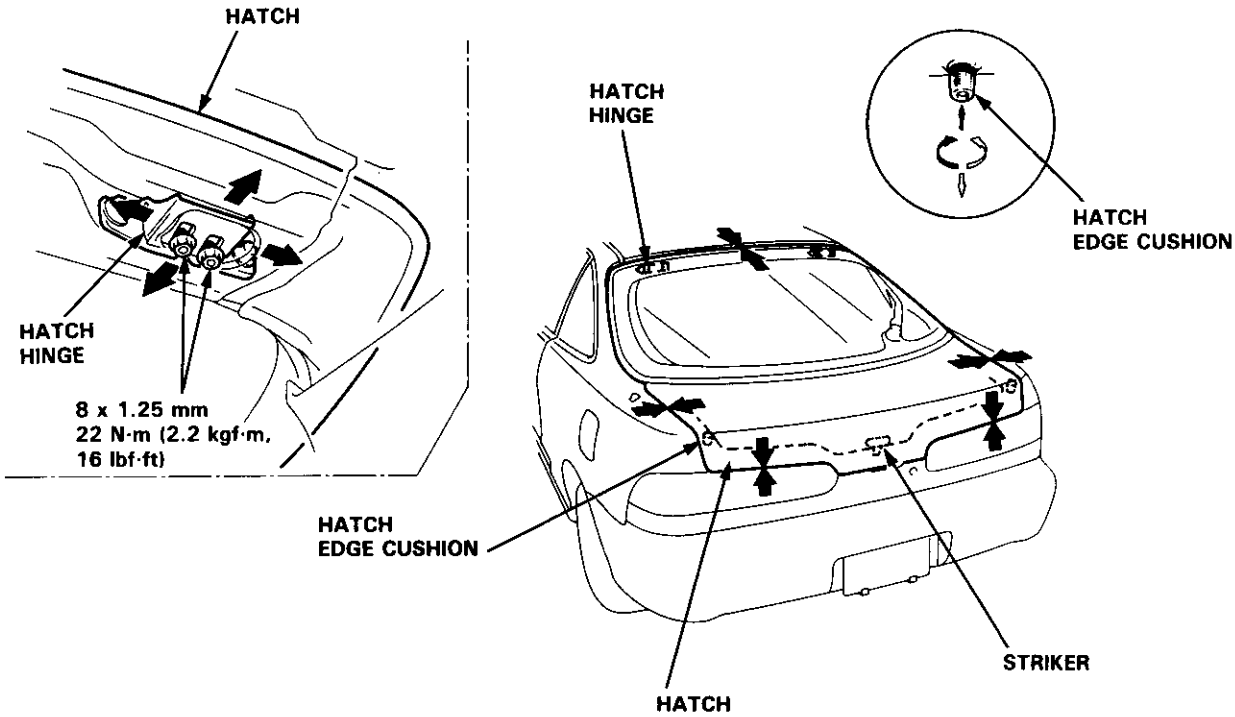

NOTE: Move the striker right or left until it's centered in the hatch latch, as shown.

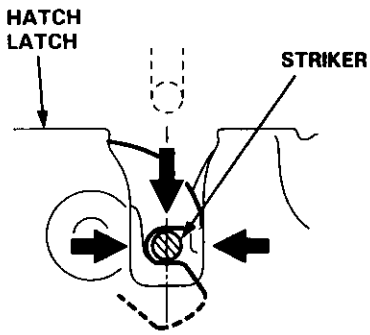

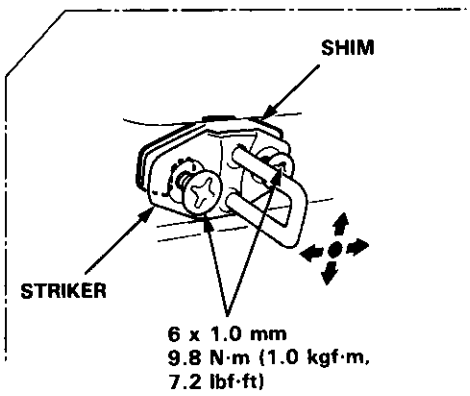

5. After adjustment, tighten each bolt and nut securely.

Support Strut Disposal

⚠WARNING The support strut contains nitrogen gas and oil under pressure.
The pressure must be relieved before disposal to prevent explosion and possible injury when scrapping.

Place the support strut on a level surface with its rod extended, and drill a hole 2–3 mm (3/32″) diameter in the body to release the gas.

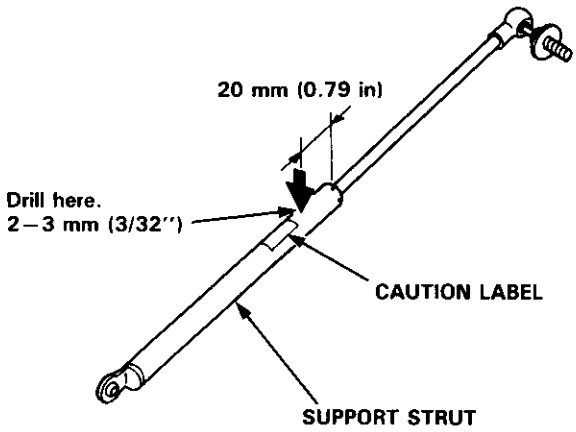

⚠WARNING Always wear eye protection to avoid getting metal shavings in your eyes when releasing the gas from the support strut.

Replacement

NOTE:
- An assistant is helpful when removing the trunk lid.
- Take care not to damage the trunk lid and body.
- Open the trunk lid.

1. Disconnect the connectors and trunk lid opener cable. Remove the wire harness and trunk lid opner cable from the trunk lid.

   NOTE: Before pulling out the wire harness, tie a string to the end of it so you can pull it back in when the trunk lid is reinstalled.

▷ : Clip locations

A▷ : Clip, 3 **B◁ : Clip, 1** **C△ : Clip, 5**

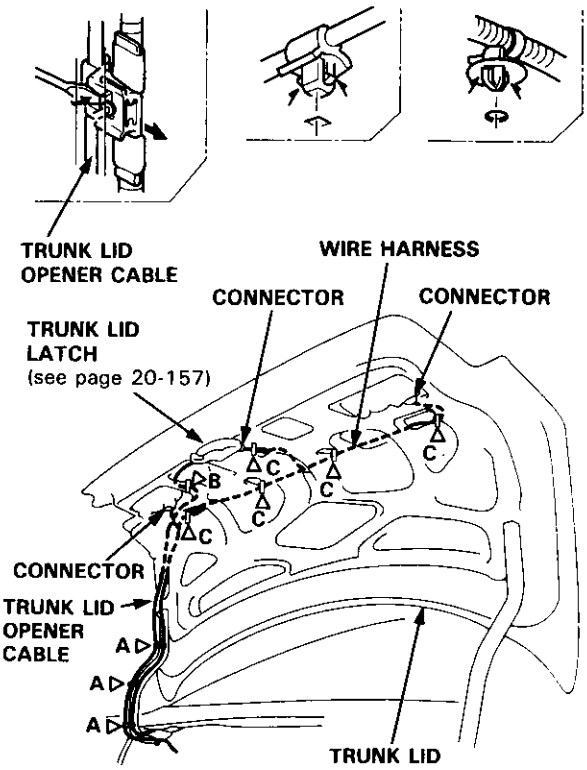

(cont'd)

Replacement (cont'd)

2. Remove the bolts, then remove the trunk lid.

▶ : **Bolt locations, 4**

6 x 1.0 mm
9.8 N·m (1.0 kgf·m, 7.2 lbf·ft)

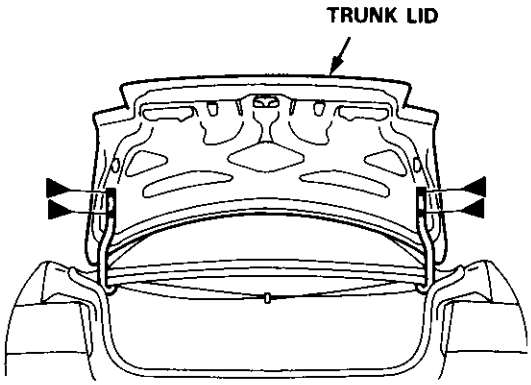

3. If necessary, remove the trunk lid hinge.

NOTE:
- Remove the rear shelf (see page 20-95).
- Remove the torsion bars with the torsion bar assembly tool.

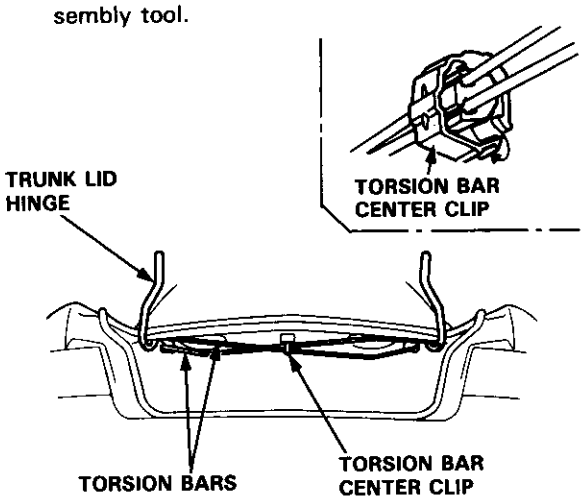

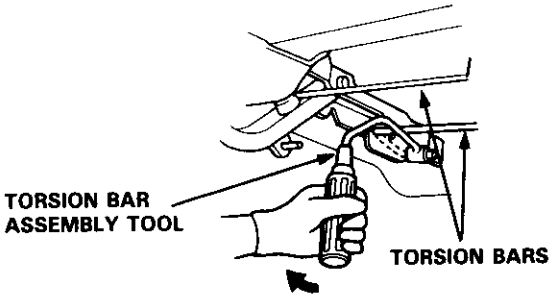

- Remove the bolts, then remove the trunk lid hinge.

▼ : **Bolt locaitons, 4**

6 x 1.0 mm
9.8 N·m (1.0 kgf·m, 7.2 lbf·ft)

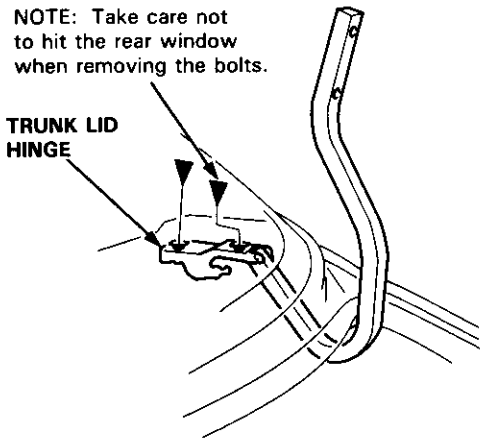

4. Installation is the reverse of the removal procedure.

NOTE:
- Make sure the connectors are connected properly.
- Adjust the torsion bars fore or aft with the torsion bar assembly tool as shown.

○ = Normal position
● = Higher tension

- Make sure the trunk lid locks securely.
- Make sure the trunk lid opens properly.
- Adjust the trunk lid alignment (see page 20-151).

Adjustment

NOTE: Before adjusting the trunk lid, loosen each bolt slightly.

1. Adjust the trunk lid hinges right and left as well as fore and aft by using the elongated holes.
2. Turn the trunk lid edge cushions, as necessary, to make the trunk lid fit flush with the body at the rear and side edges.
3. Adjust the fit between the trunk lid and the trunk lid opening by moving the striker.

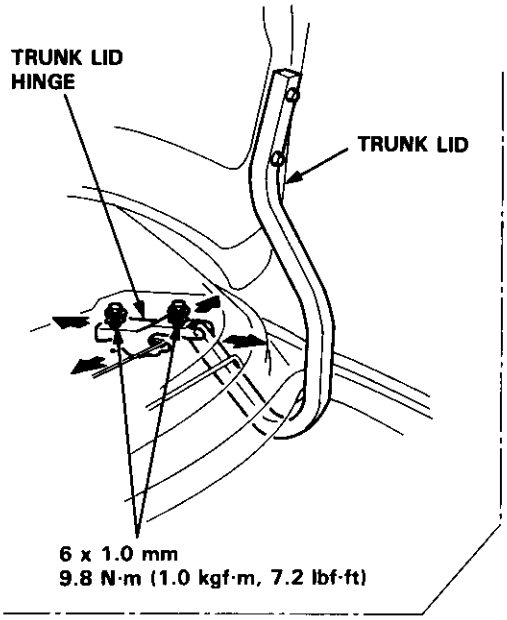

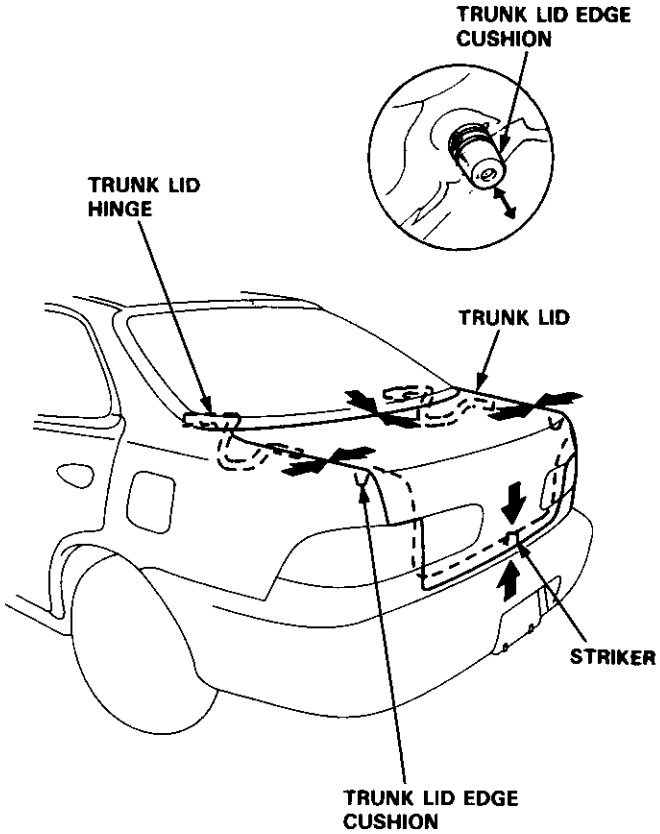

NOTE: Move the striker right or left until it's centered in the trunk lid latch, as shown.

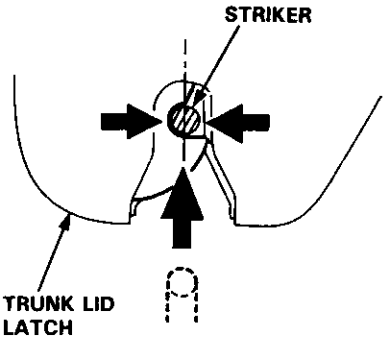

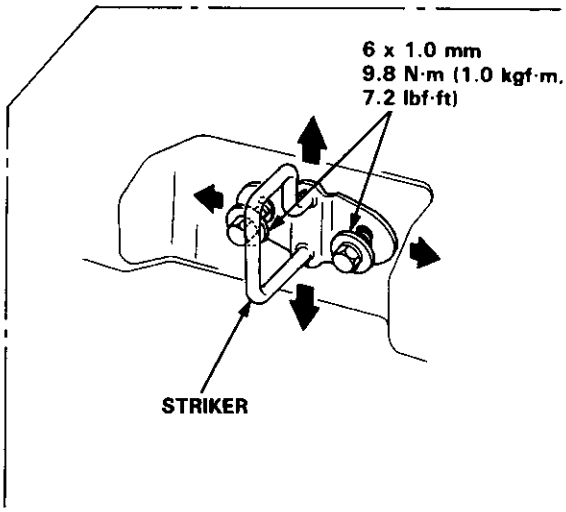

4. After adjustment, tighten each bolt securely.

Opener Cables

Replacement

NOTE:
- When removing the clips, use a clip remover.
- Take care not to bend the opener cables.

Hood Opener Cable:

▽ : **Clip locations**

▶ : **Screw locations, 6**

A ▽ : **Clip, 5**

B ▽ : **Clip, 6**

NOTE: Loosen the screw, then remove the clip using a clip remover.

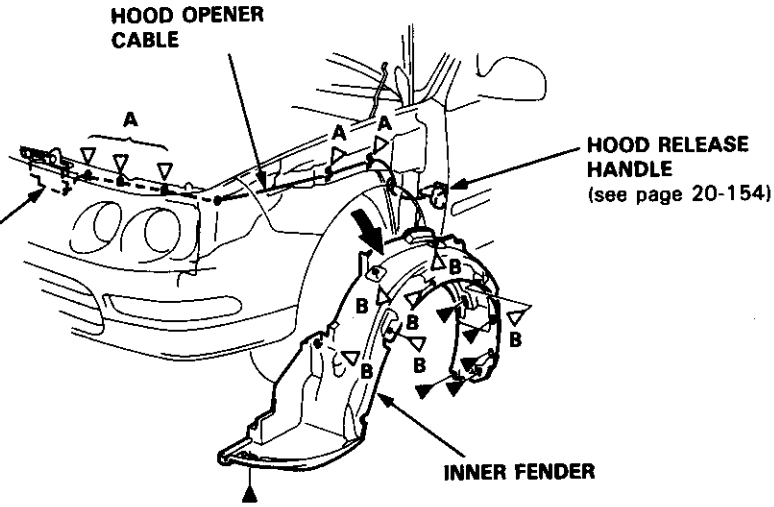

Hatch/Fuel Lid Opener Cables (Hatchback):

NOTE: Remove the rear seat (see page 20-108), rear trim panel and side trim panel (see page 20-91), then pull the carpet back, as necessary (see page 20-124).

△ : **Clip, cable cushion locations**

A△ : **Clip, 1** B△ : **Clip, 2** C△ : **Clip, 7** D▷ : **Clip, 1** E▷ : **Clip, 1** F△ : **Clip, 1** G△ : **Clip, 1** H△ : **Cable cushion, 5**

Right side:

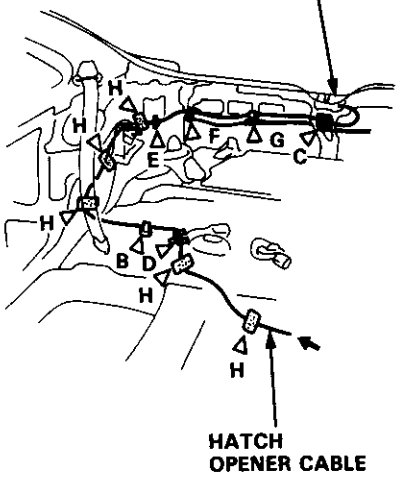

Left side:

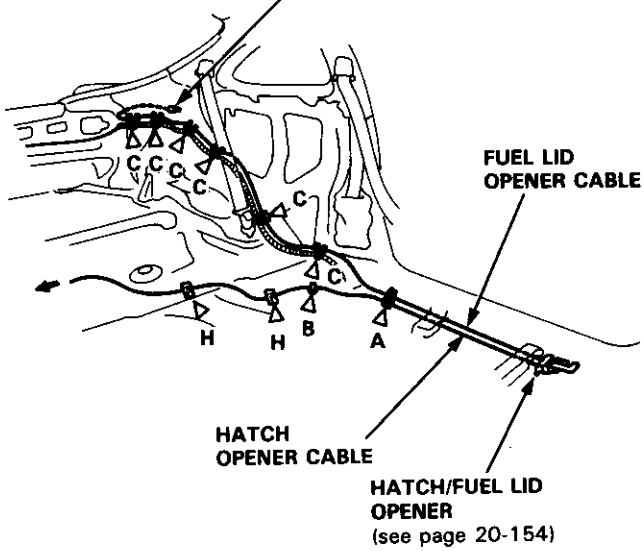

Trunk Lid/Fuel Lid Opener Cable (Sedan):

NOTE: Remove the rear seat (see page 20-110) and center pillar lower trim (see page 20-94), then pull the carpet back, as necessary (see page 20-124). Remove the left trunk side panel (see page 20-97).

▷ : Clip, cable cushion locations

A ▷ : Clip, 1 B ▽ : Clip, 2 C △ : Clip, 1 D ▷ : Clip, 3 E △ : Clip, 1 F ◁ : Cable cushion, 1

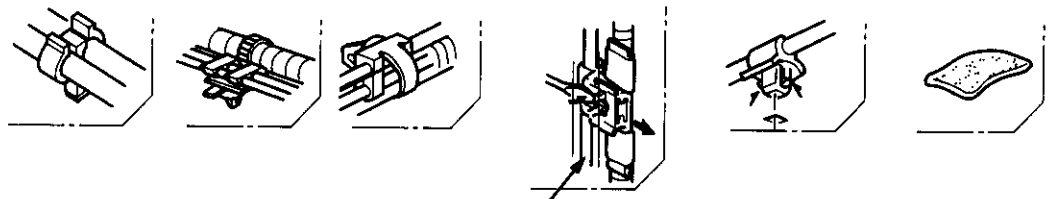

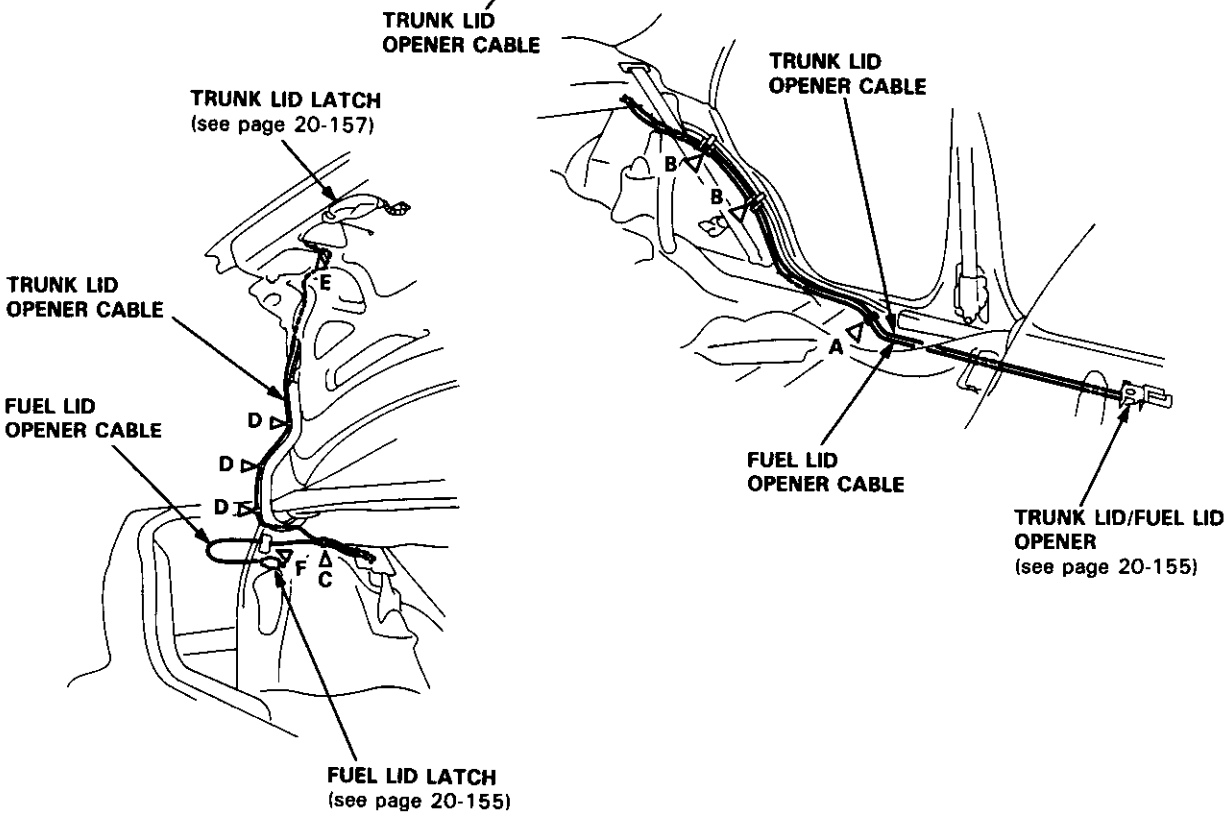

Installation is the reverse of the removal procedure.

NOTE:

- Make sure each opener cable is routed and connected properly.
- Make sure the hood, hatch, trunk lid and fuel lid open properly.

Opener and Latch

Replacement

NOTE: Take care not to bend the opener cables.

Hood Release Handle:

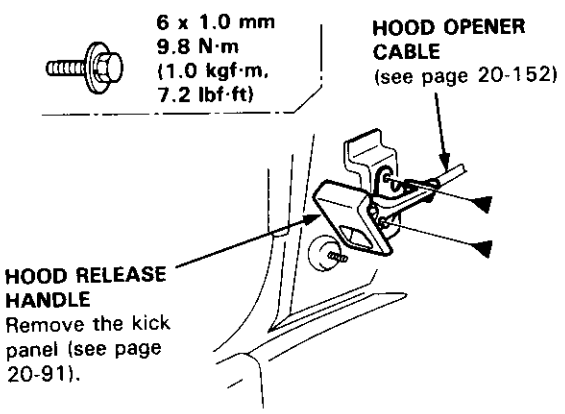

Hood Latch:

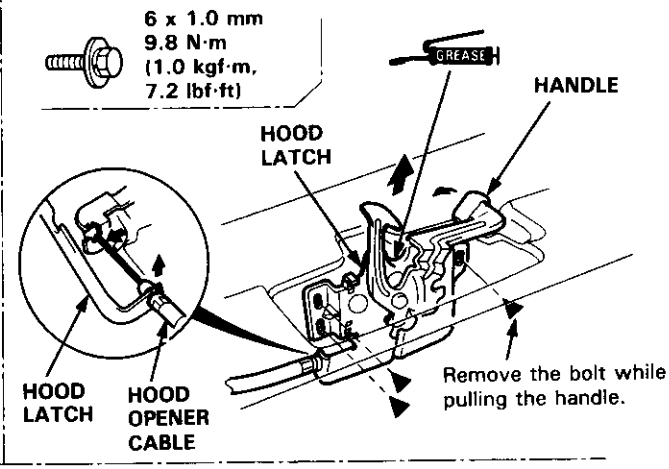

Hatch/Fuel Lid Opener (Hatchback):

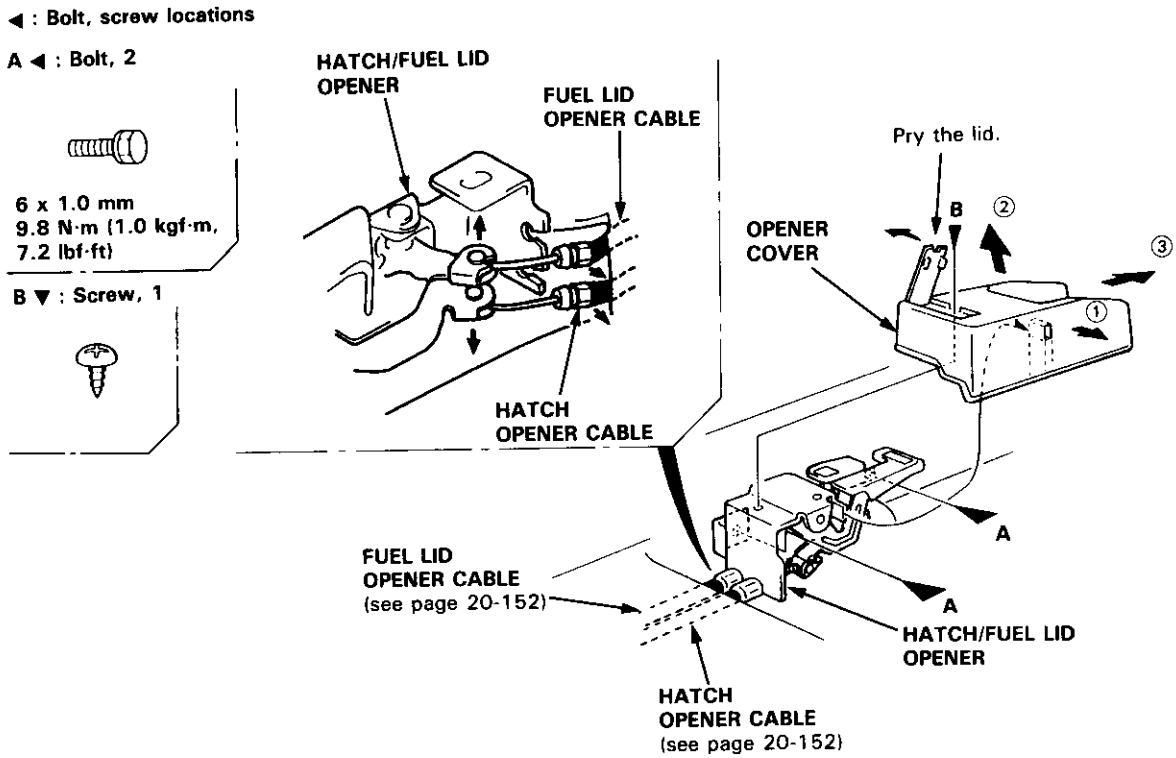

Installation is the reverse of the removal procedure.

NOTE:
- Make sure each opener cable is connected properly.
- Make sure the hood locks securely.
- Make sure the hood, hatch and fuel lid open properly.

NOTE: Take care not to bend the opener cables.

Trunk Lid/Fuel Lid Opener (Sedan):

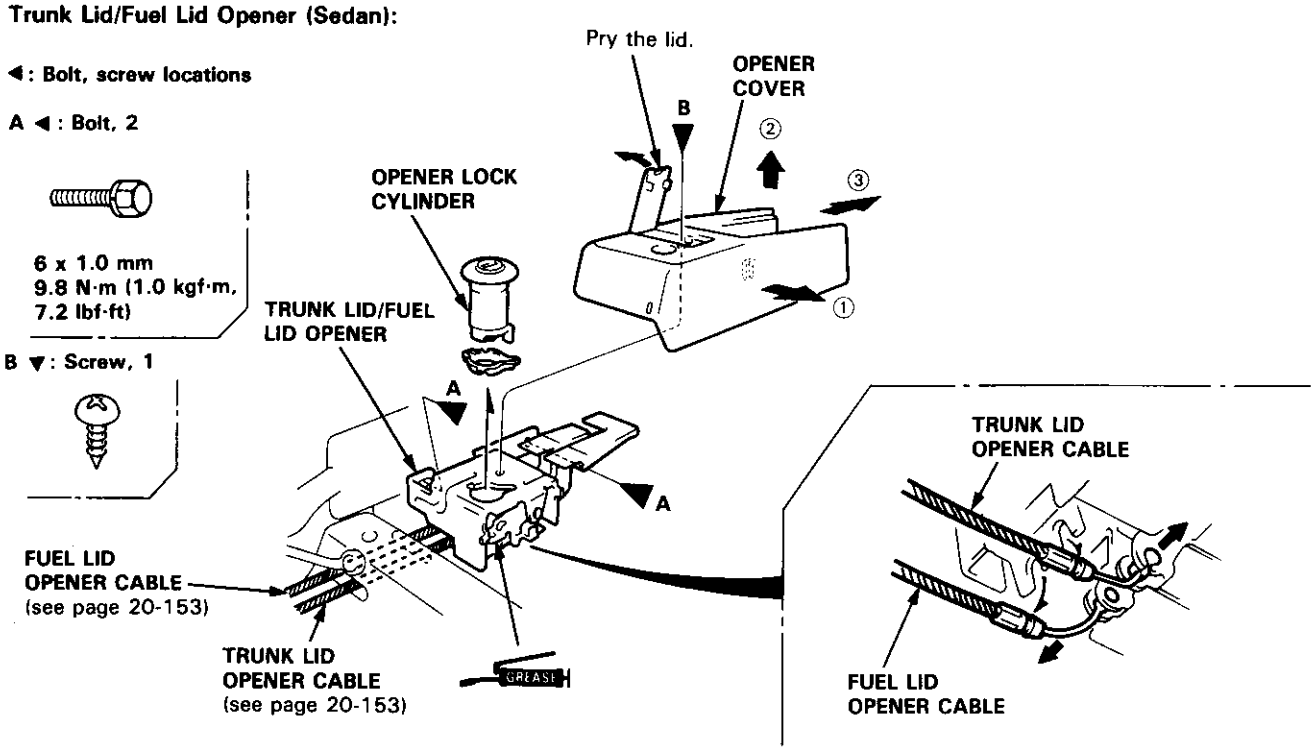

Fuel Lid Latch:

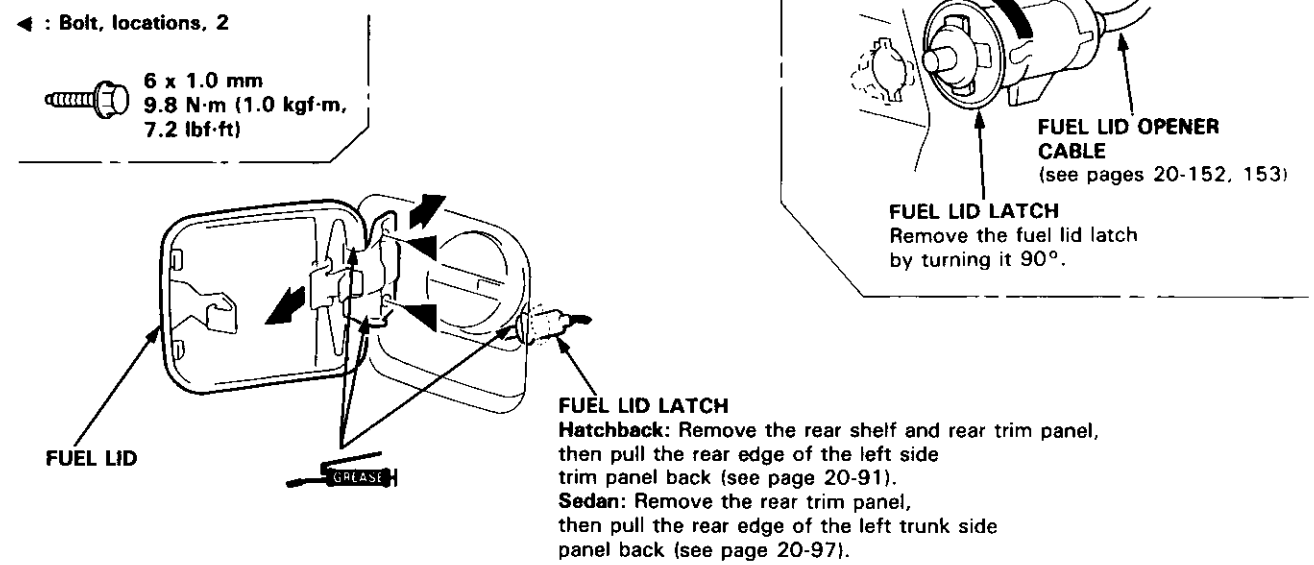

Installation is the reverse of the removal procedure.

NOTE:
- Make sure each opener cable is connected properly.
- Make sure the fuel lid fits flush with the body.
- Make sure the fuel lid locks securely.
- Make sure the trunk lid and fuel lid open properly.

Hatch Latch and Lock Cylinder

Replacement

NOTE: Take care not to bend the cylinder rod and hatch opener cable.

1. Remove the rear trim panel (see page 20-92).

2. Disconnect the cylinder rod and connector.

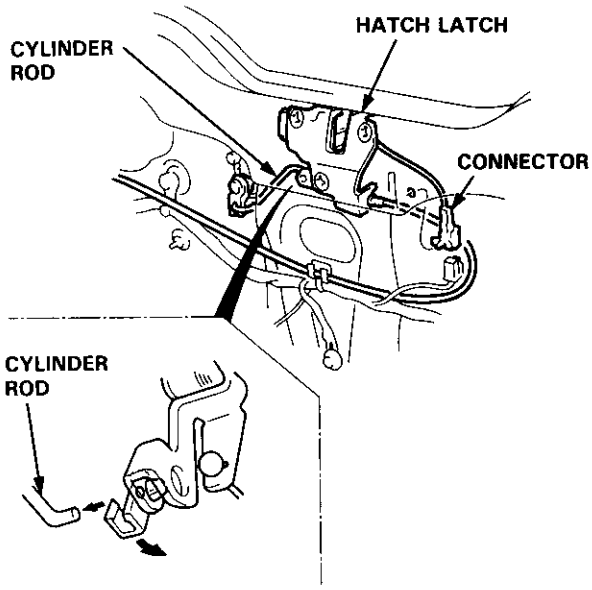

3. Remove the hatch latch.

▶: Screw locations, 3

6 x 1.0 mm
9.8 N·m (1.0 kgf·m, 7.2 lbf·ft)

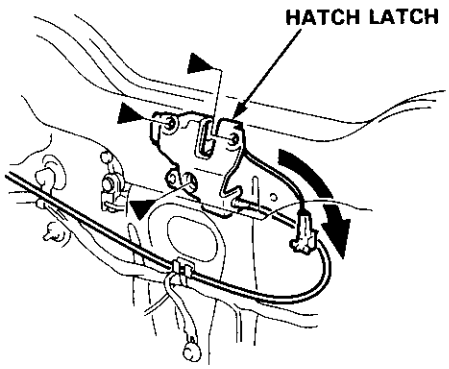

4. Disconnect the hatch opener cable.

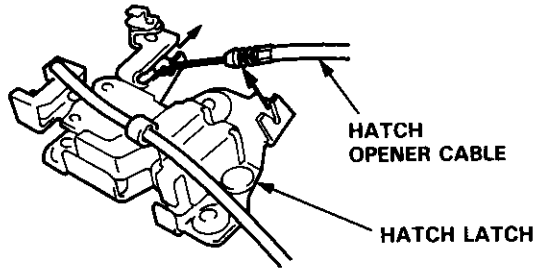

5. Remove the lock cylinder by turning it 45°.

▶: Bolt location, 1

6 x 1.0 mm
9.8 N·m (1.0 kgf·m, 7.2 lbf·ft)

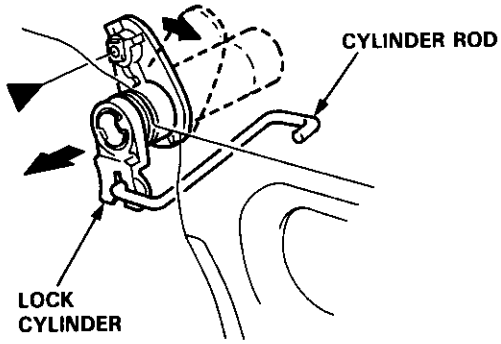

6. Installation is the reverse of the removal procedure.

NOTE:
- Apply grease to the hatch latch.

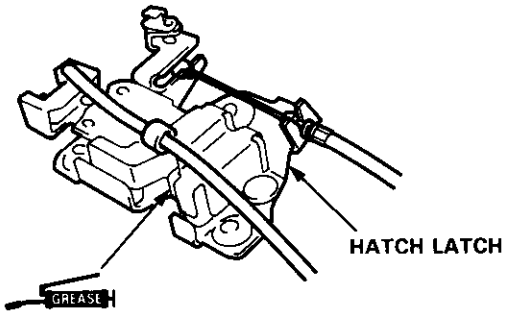

- Make sure the hatch locks securely.
- Make sure the hatch opens properly.
- Make sure the connector is connected properly.

Trunk Lid Latch and Lock Cylinder

Replacement

NOTE: Take care not to bend the cylinder rod and trunk lid opener cable.

1. Disconnect the connector and trunk lid opener cable.

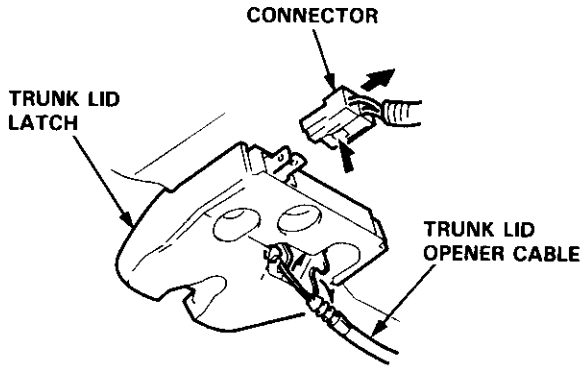

2. Disconnect the cylinder rod.

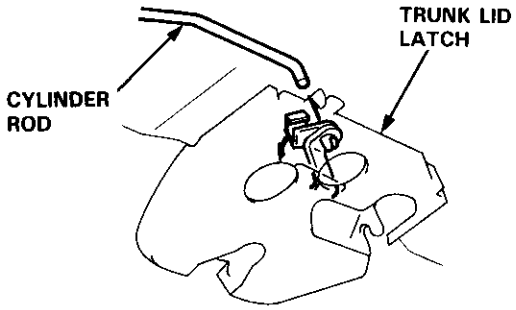

3. Remove the bolts, then remove the trunk lid latch.

▲ : Bolt locations, 3

6 x 1.0 mm
9.8 N·m (1.0 kgf·m, 7.2 lbf·ft)

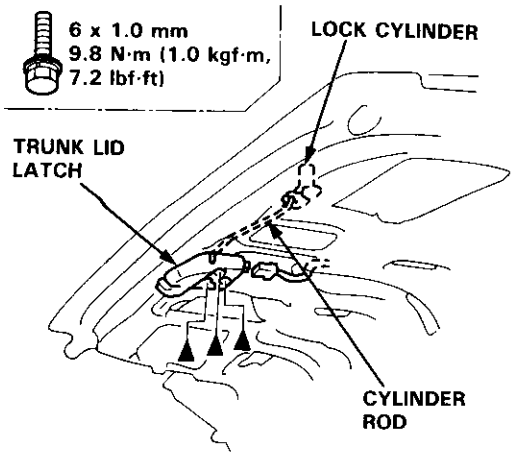

4. Remove the lock cylinder cover.

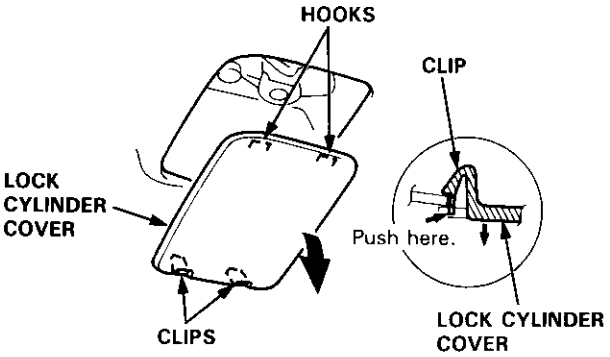

5. Remove the bolt, then pull the lock cylinder out. Remove the lock cylinder from the cylinder rod, then take them out.

▲ : Bolt location, 1

6 x 1.0 mm
9.8 N·m (1.0 kgf·m, 7.2 lbf·ft)

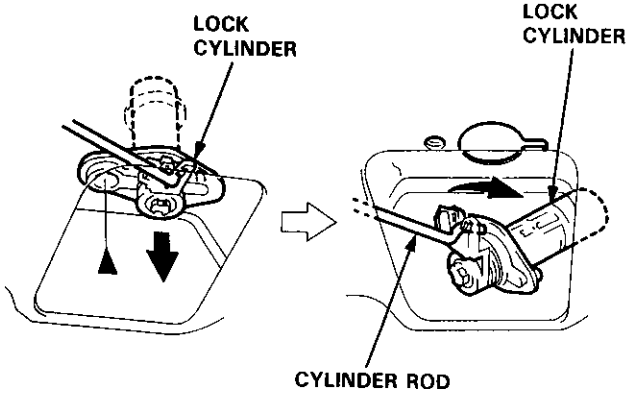

6. Installation is the reverse of the removal procedure.

NOTE:
- Apply grease to the trunk lid latch.

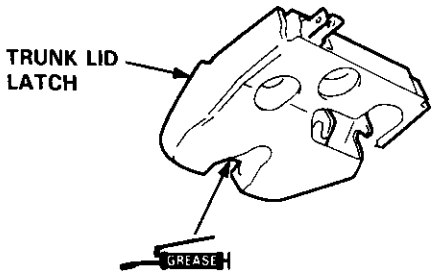

- Make sure the trunk lid locks securely.
- Make sure the trunk lid opens properly.
- Make sure the connector is connected properly.

Retainers and Weatherstrip

Replacement

CAUTION: Wear gloves to remove and install the retainers.

NOTE: Take care not to bend the retainers.

◀ : Screw locations, 19

◁ : Clip locations, 8

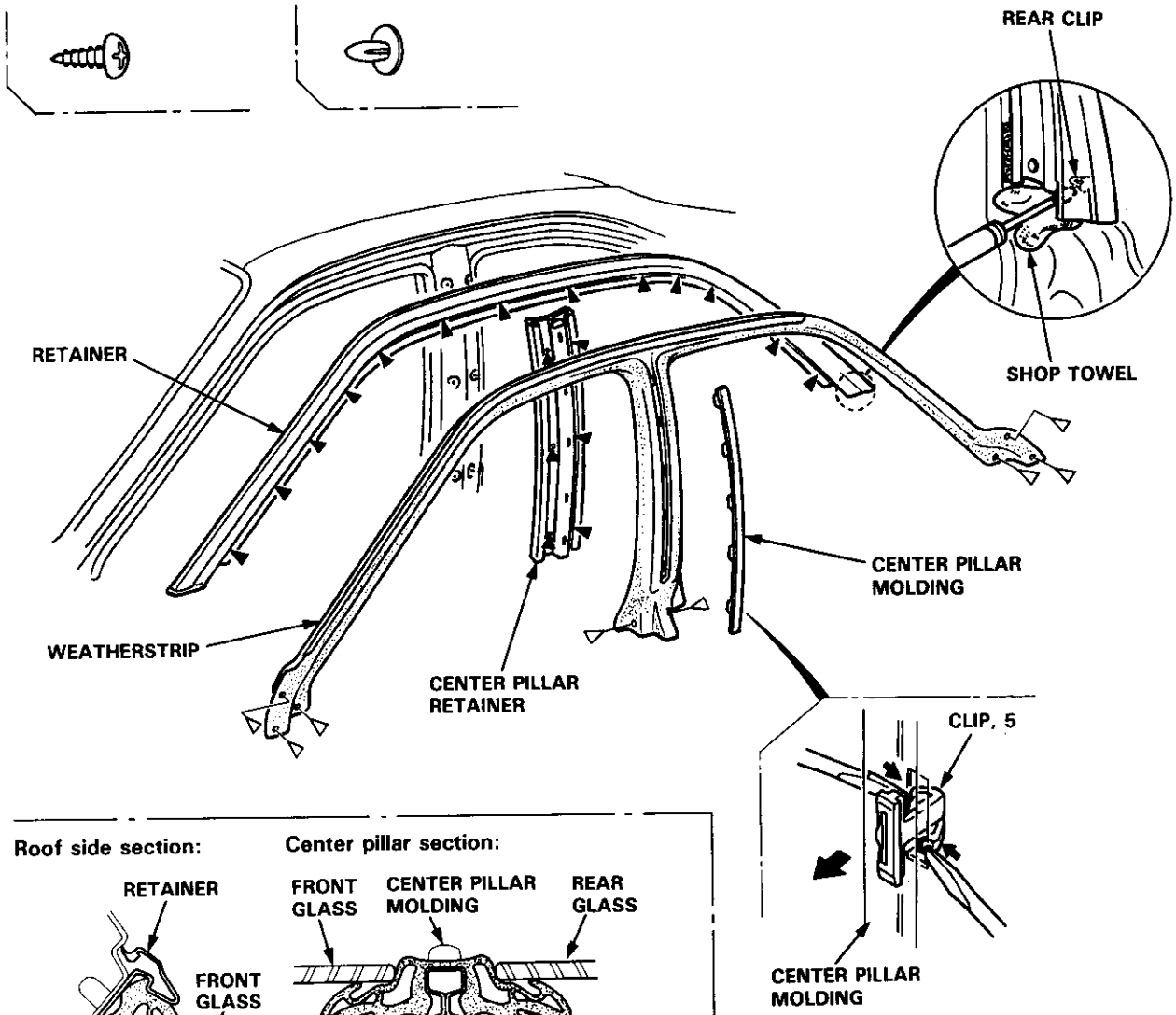

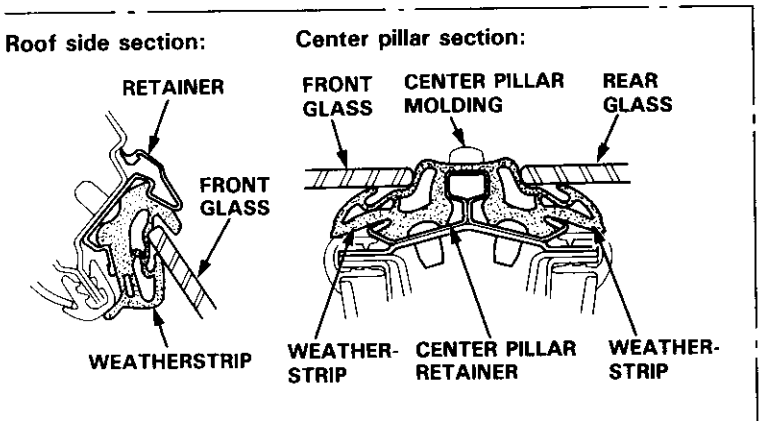

NOTE: The numbers after the part names show the quantities of the parts used.

Installation is the reverse of the removal procedure.

NOTE:
- Check the weatherstrip for damage or deterioration, and replace if necessary.
- After installing the weatherstrip, check for water leaks.
- If necessary, adjust the position of the door glass (see page 20-40).
- If necessary, replace any damaged clips.

Hatch Spoiler

Replacement

NOTE:
- Take care not to scratch the hatch.
- Open the hatch.

1. Remove the hatch side trim and hatch trim panel (see page 20-146).

2. Remove the nuts and disconnect the connector.

▲: Nut locations, 4

6 x 1.0 mm
9.8 N·m
(1.0 kgf·m,
7.2 lbf·ft)

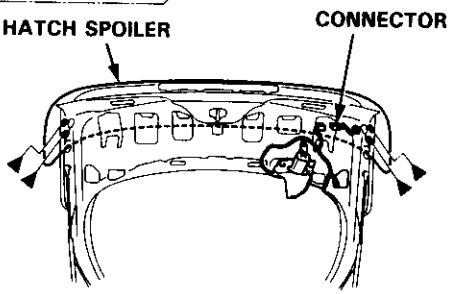

3. Remove the hatch spoiler by turning the clip nut on the left side counterclockwise.

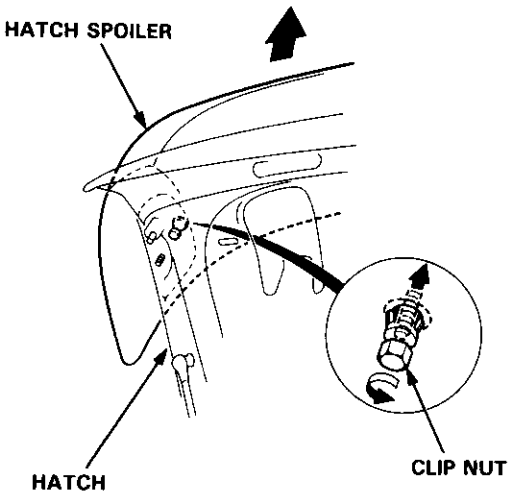

3. Installation is the reverse of the removal procedure.

Fender Well Trim and Wheelhouse Protector

Replacement

NOTE:
- Take care not to bend the fender well trim.
- Before installing the fender well trim, clean the body bonding surface with a sponge dampened in alcohol.
- After cleaning, keep oil, grease or water from getting on the surface.

▶: Screw locations.

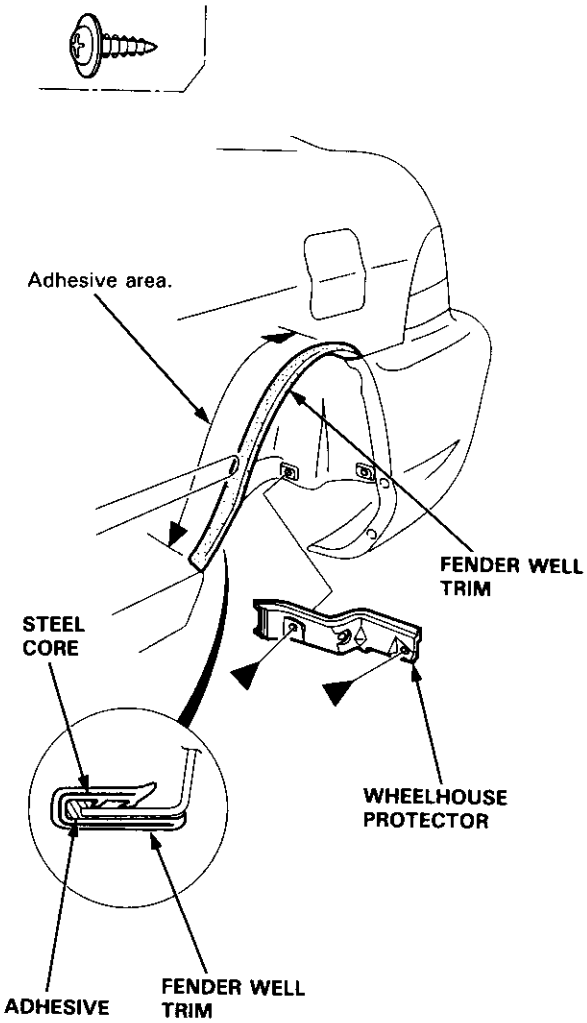

Hatch Weatherstrip/Trunk Lid Weatherstrip

Replacement

Hatch Weatherstrip:

NOTE:
- Before installing the hatch weatherstrip, apply clear sealant into its channel at the ▶ locations.
- After applying the sealant, install the hatch weatherstrip.

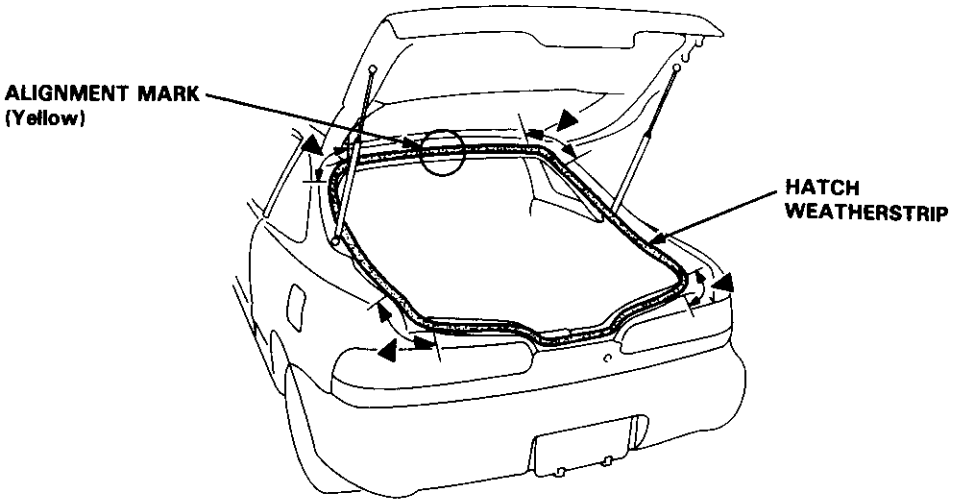

Trunk Lid Weatherstrip:

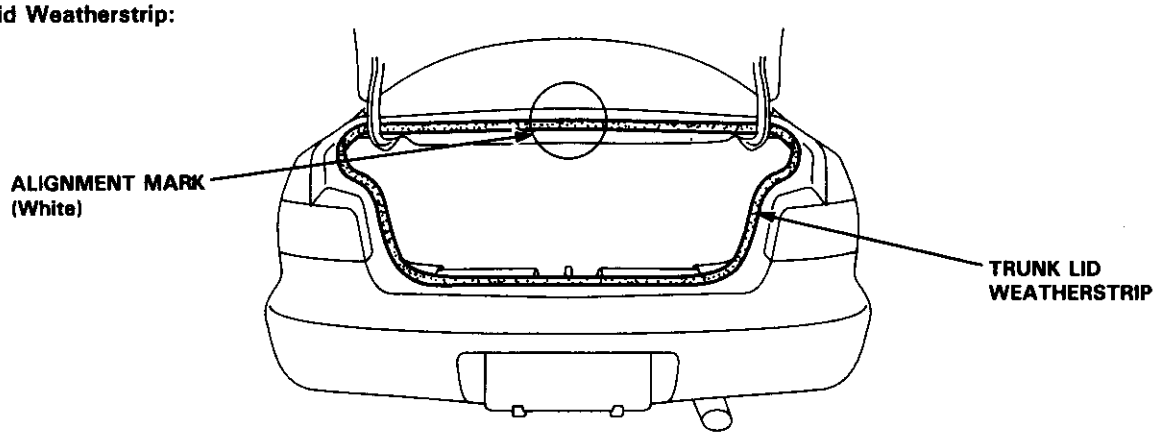

When installing the hatch or trunk lid weatherstrip, align it with the alignment mark on the hatch or trunk lid opening.

NOTE:
- Make sure there are no wrinkles in the weatherstrip.
- Check for water leaks.

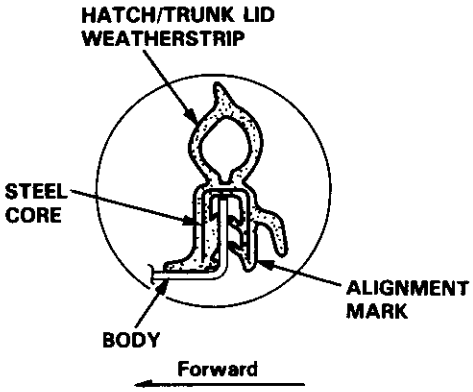

Roof Molding

Replacement

CAUTION: When prying with a flat tip screwdriver, wrap it with protective tape to prevent damage.

NOTE: Take care not to scratch the body and roof molding.

1. Pry the roof molding with a flat tip screwdriver as shown.

   CAUTION: Use protective tape on the body.

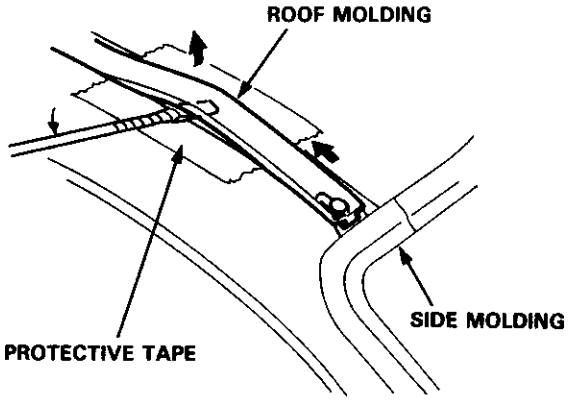

2. Pull and slide the roof molding, then detach the bracket on the end of the roof molding from the pin.

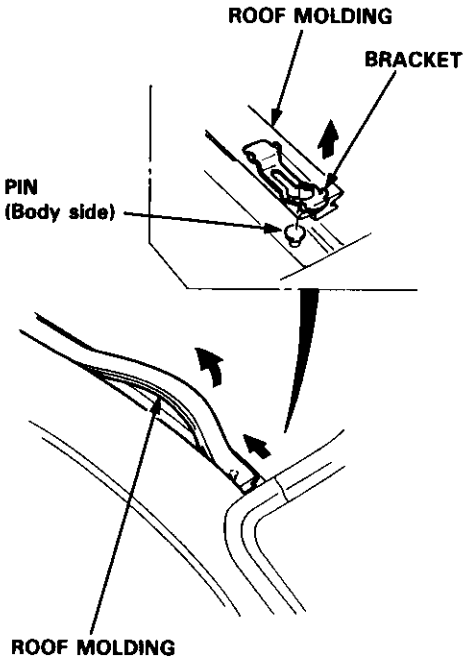

3. Pull the roof molding up and detach the bracket from the pin, then remove the roof molding.

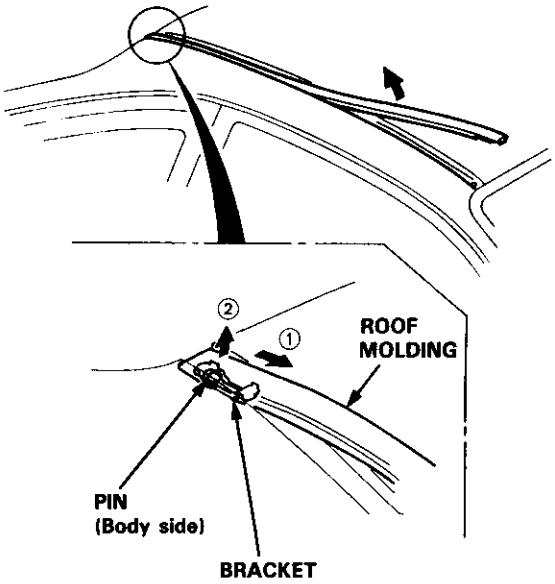

4. Installation is the reverse of the removal procedure.

   NOTE:
   - Take care not to damage the windshield side molding.
   - Make sure the roof molding is installed securely.

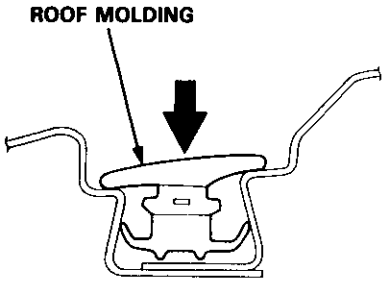

Door and Side Moldings

Replacement

CAUTION: When prying with a flat tip screwdriver, wrap it with protective tape to prevent damage.

NOTE:
- To remove the door molding, remove the door panel and plastic cover (see pages 20-4, 20, 32).
- To remove the rear side molding, remove the side trim panel (see page 20-91).
- Take care not to bend the door moldings.
- The steel core in the door molding cannot be restored to its original shape once it is bent. Replace the door molding if the steel core is bent.

▽ : Clip locations

A▽ : Clip (Hatchback, 5) (Sedan, 6)

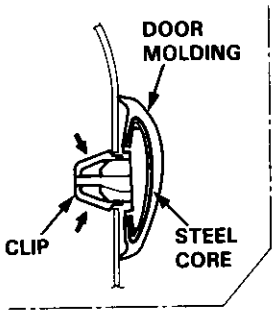

B▽ : Clip (Hatchback, 3)

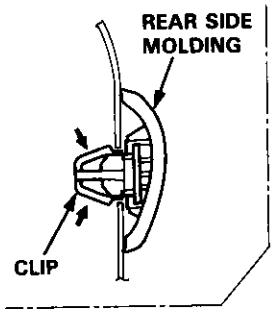

C▽ : Clip (Hatchback, 1) (Sedan, 2)

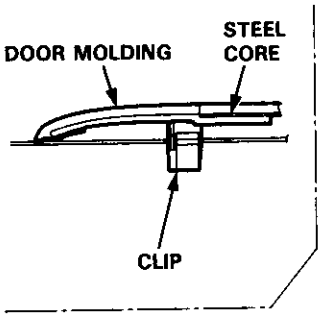

D▽ : Clip (Sedan, 1)

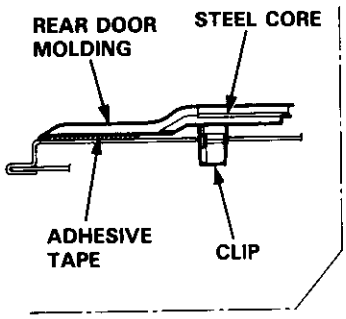

Hatchback

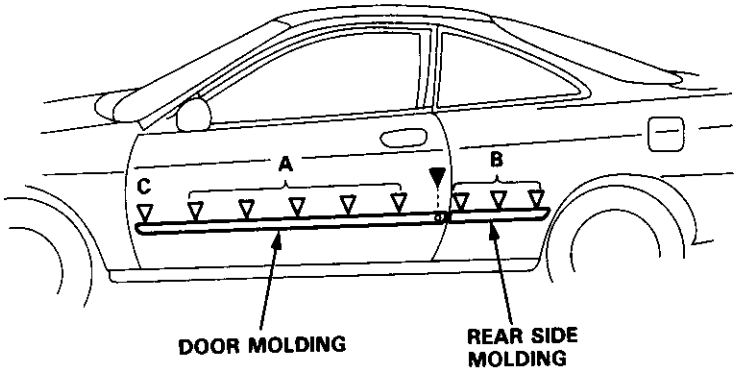

▼ : Plastic nut location (Hatchback, 1) (Sedan, 1)

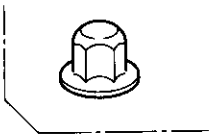

Sedan

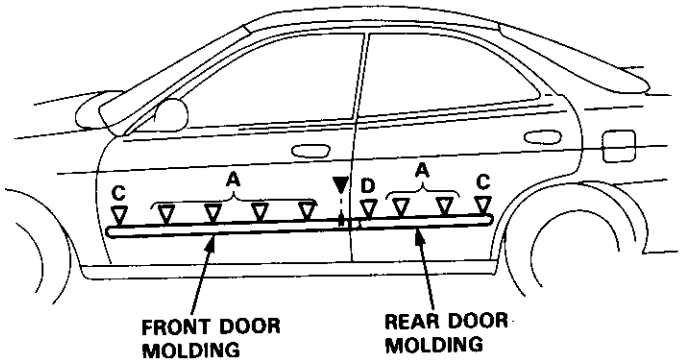

NOTE:
- Before installing the rear door molding, scrape the adhesive tape from the molding and body.
- Clean the molding and door bonding surfaces with a sponge dampened in alcohol.
- After cleaning, keep oil, grease and water from getting on the surface.
- Glue the new adhesive tape to the molding as shown.

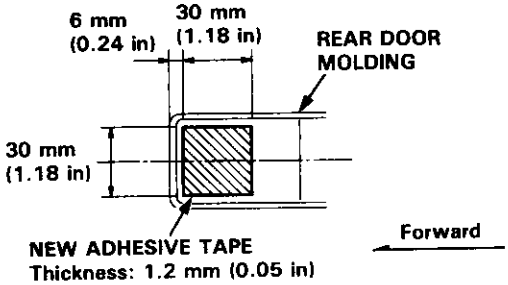

Installation is the reverse of the removal procedure.

NOTE: If necessary, replace any damaged clip.

Side Sill Panel

Replacement

▽ : Clip locations

A▽ : Clip (Hatchback, 8)
(Sedan, 8)

B△ : Clip (Hatchback, 7)
(Sedan, 7)

▶ : Screw locations, 4

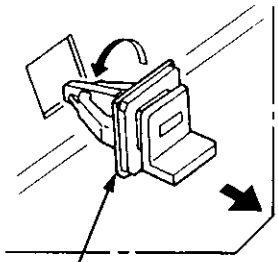

SIDE CLIP
Remove the side clips from the body by turning them 45°

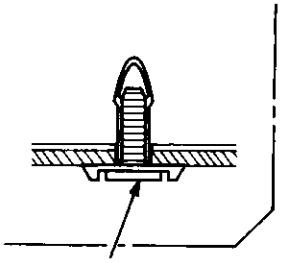

NOTE: Loosen the screw, then remove the lower clip using a clip remover.

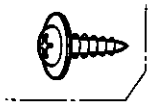

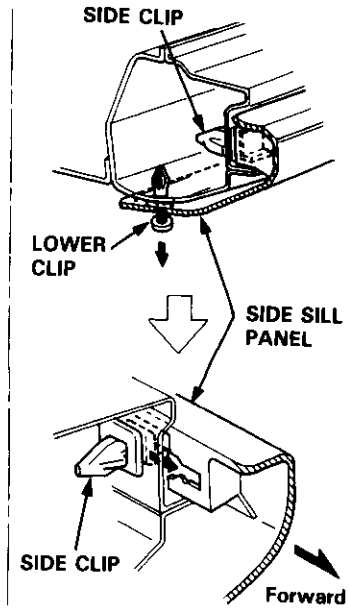

NOTE: When removing the side sill panel, the side clips will stay in the body.

Remove the lower clips, then remove the side sill panel by sliding it forward.

Hatchback

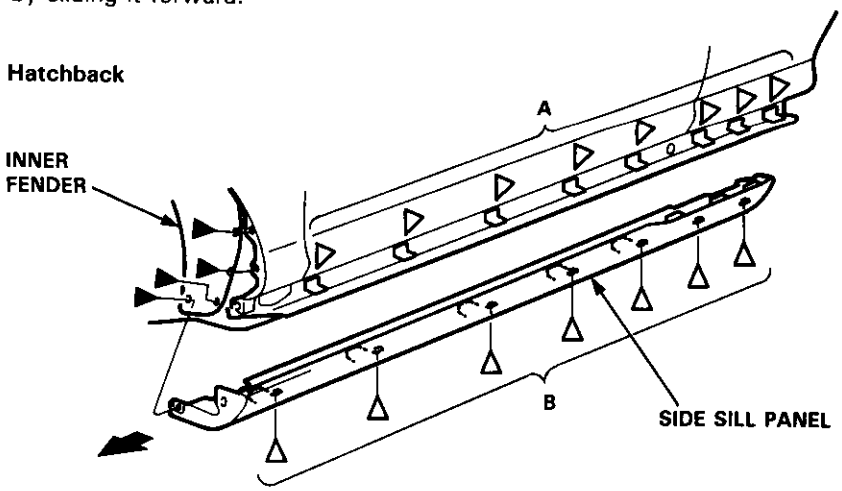

Sedan

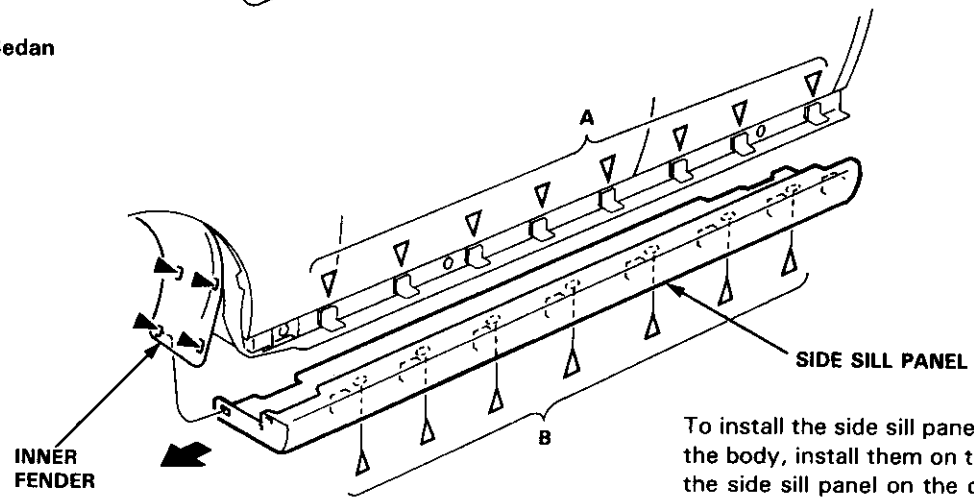

To install the side sill panel, remove the side clips from the body, install them on the side sill panel, then install the side sill panel on the car.

NOTE:
- Take care not to twist the side sill panel.
- If necessary, replace any damaged side and lower clips.

Rear Emblems

Installation

Align the application tape with the rear turn signal light and the gap between the taillight and body, as shown, then press the emblem into place. Remove the application tape.

NOTE:
- Before applying, clean the body surface with a sponge dampened in alcohol.
- After cleaning, keep oil, grease and water from getting on the surface.
- When applying, make sure there are no wrinkles in the emblem.

Attachment Point:

Hatchback

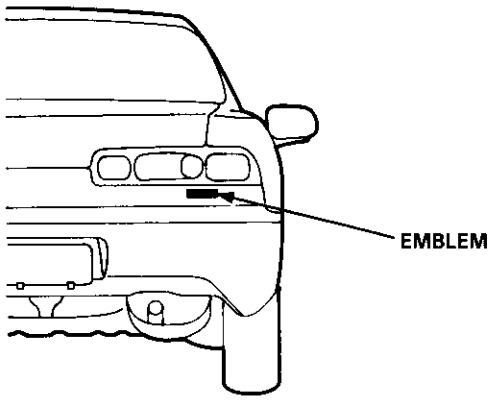

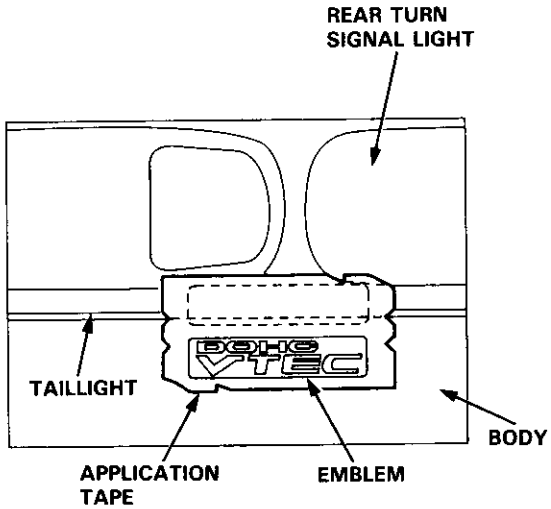

Sedan

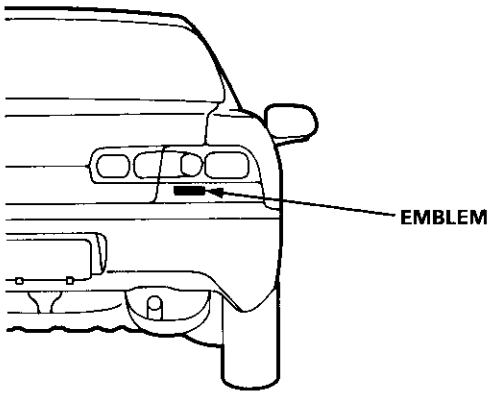

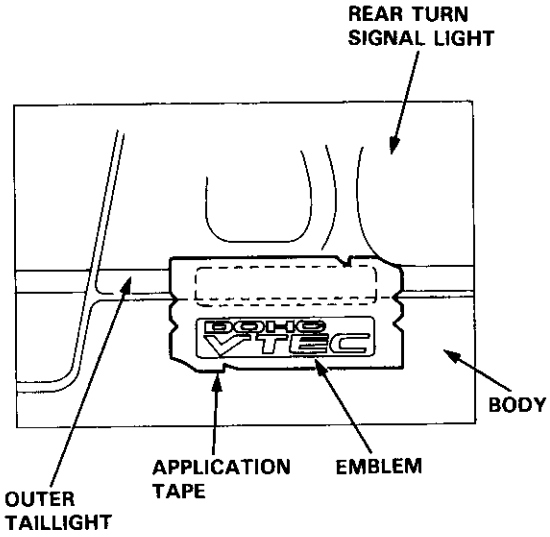

Sub-frame Torque Sequence:

CAUTION: After loosening the rear beam mounting bolts be sure to replace them with new ones.

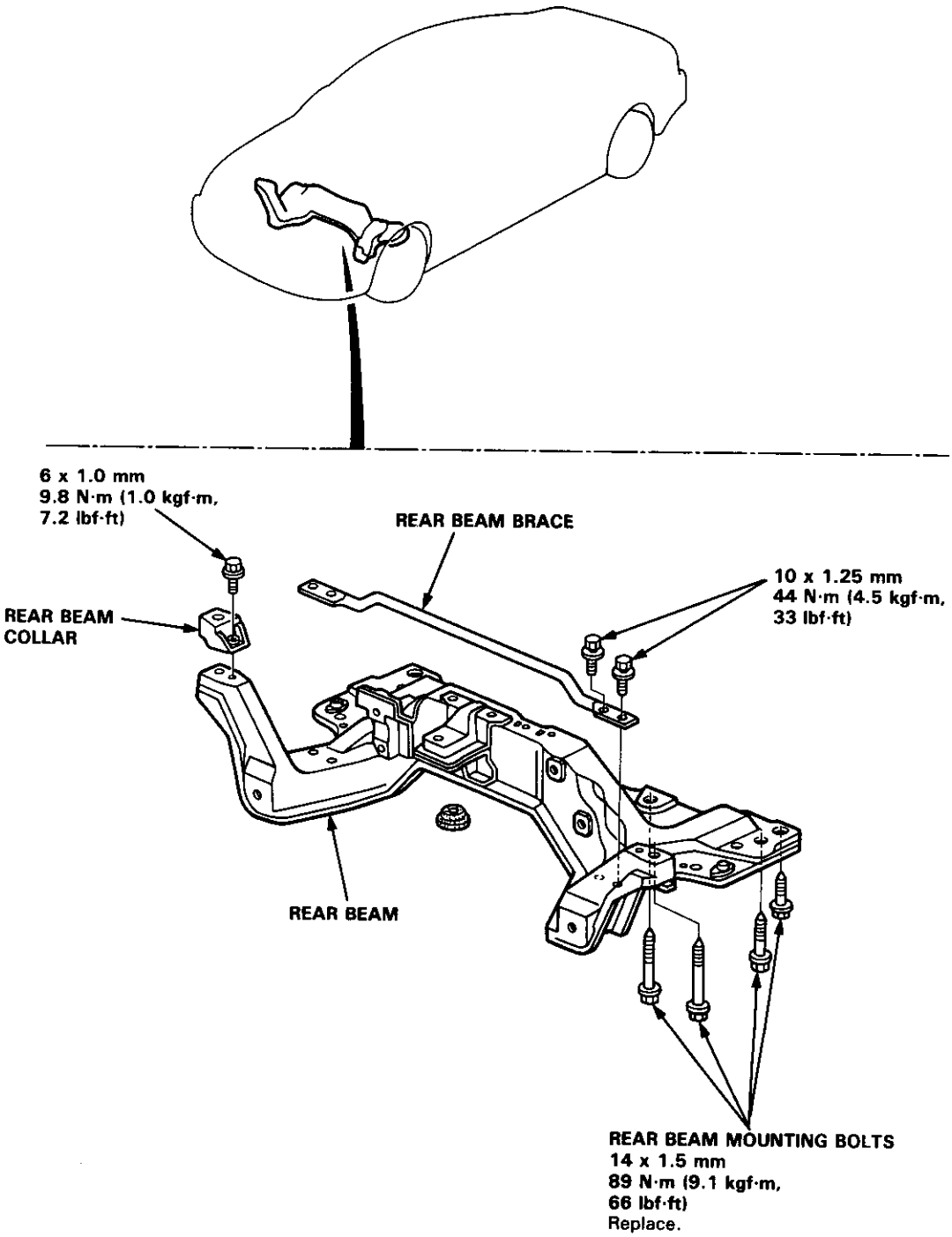

Frame Repair Chart

Unit: mm (in)

ϕ: Inner diameter

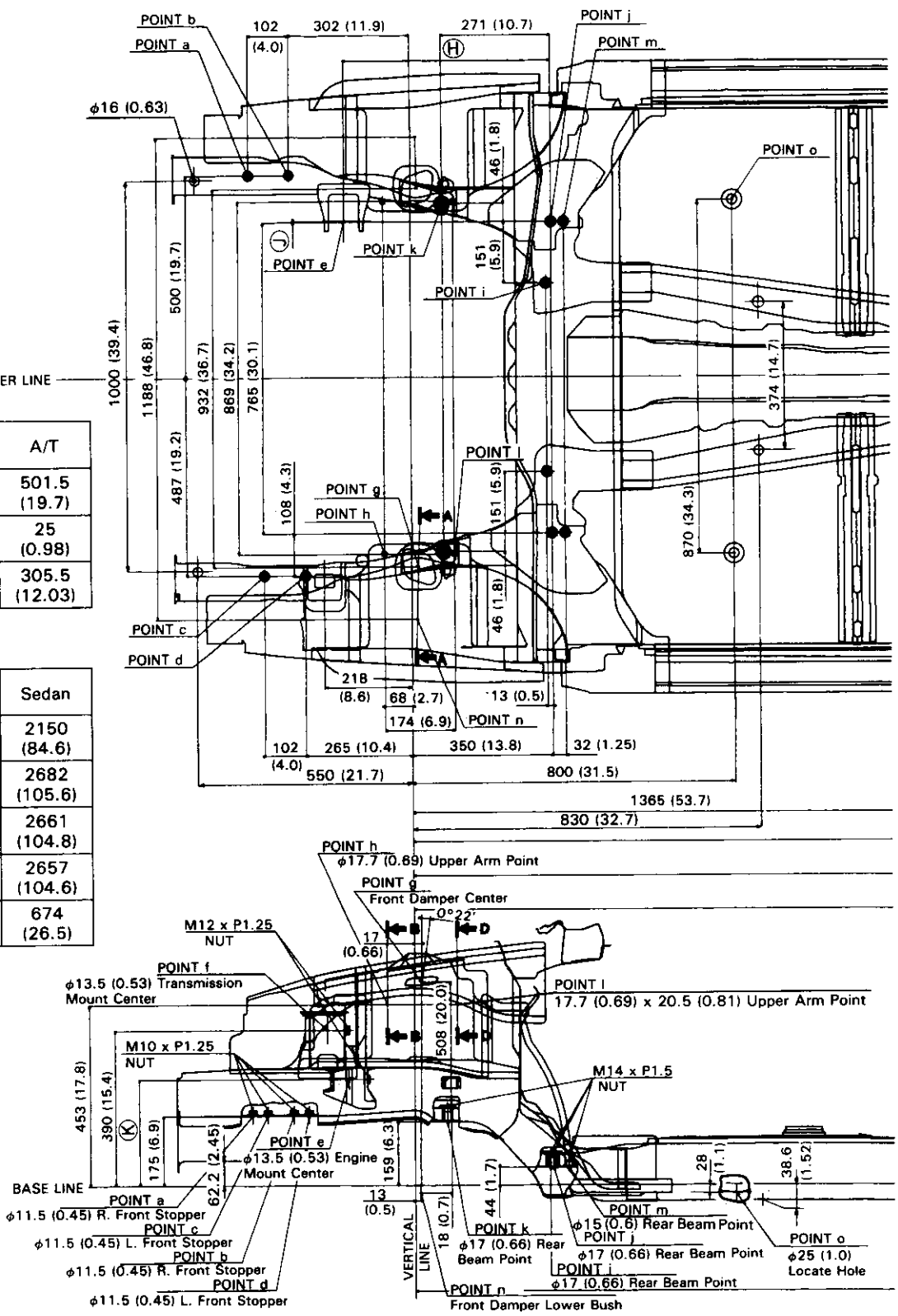

Model / Distance	M/T	A/T
Ⓗ	514.5 (20.26)	501.5 (19.7)
Ⓙ	2.5 (0.10)	25 (0.98)
Ⓚ	267.5 (10.53)	305.5 (12.03)

Model / Distance	Hatchback	Sedan
①	2100 (82.7)	2150 (84.6)
②	2632 (103.6)	2682 (105.6)
③	2611 (102.8)	2661 (104.8)
④	2607 (102.6)	2657 (104.6)
⑤	558 (22.0)	674 (26.5)

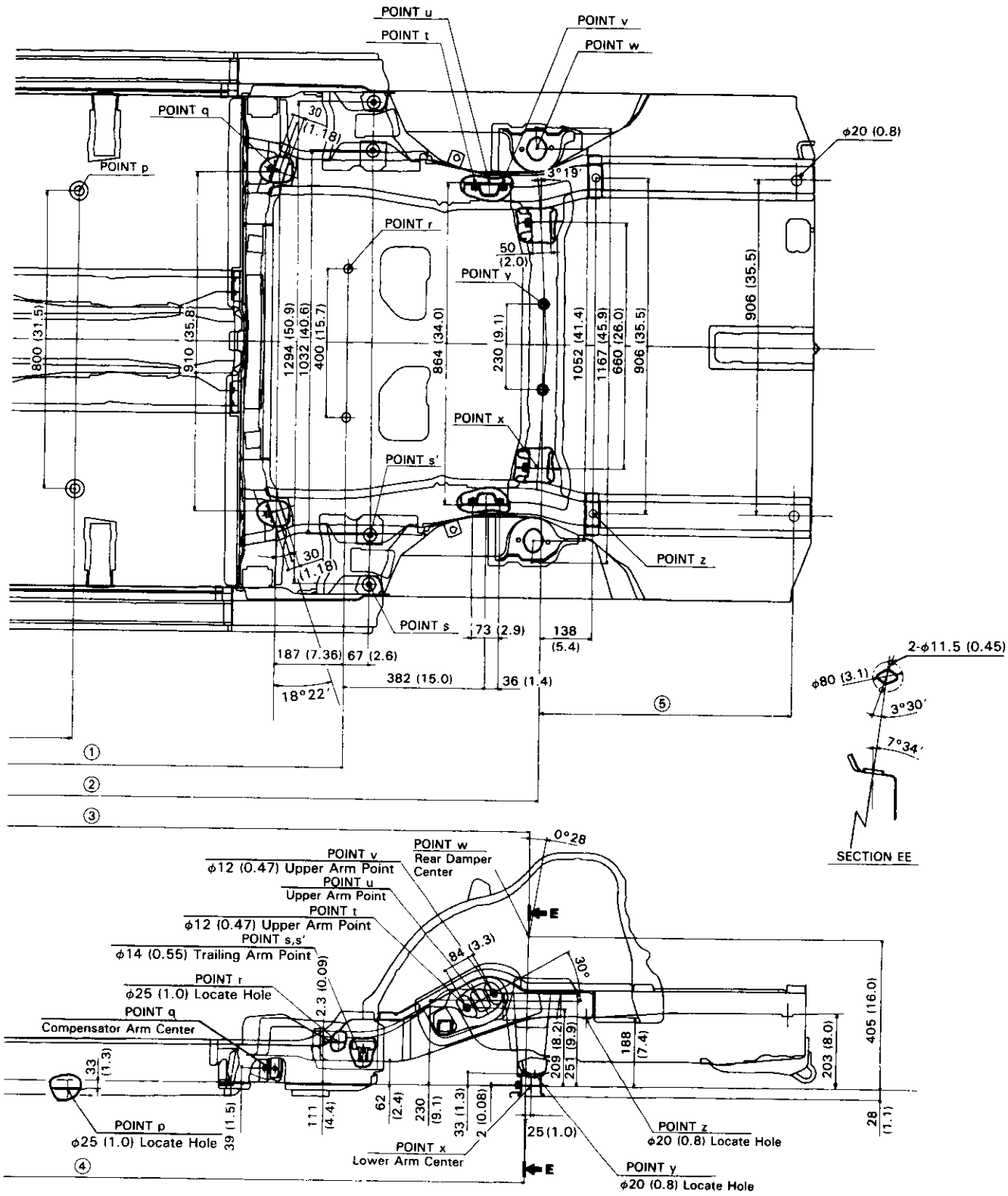
POINT u
POINT t
POINT v
POINT w
POINT q
POINT p
POINT r
POINT y
POINT x
POINT s'
POINT z
POINT s
30 (1.18)
3°19'
50 (2.0)
φ20 (0.8)
800 (31.5)
910 (35.8)
1294 (50.9)
1032 (40.6)
400 (15.7)
864 (34.0)
230 (9.1)
1052 (41.4)
1167 (45.9)
660 (26.0)
906 (35.5)
906 (35.5)
73 (2.9)
138 (5.4)
187 (7.36)
67 (2.6)
382 (15.0)
36 (1.4)
18°22'
2-φ11.5 (0.45)
φ80 (3.1)
3°30'
7°34'
SECTION EE
POINT w
Rear Damper Center
0°28
POINT v
φ12 (0.47) Upper Arm Point
POINT u
Upper Arm Point
POINT t
φ12 (0.47) Upper Arm Point
POINT s,s'
φ14 (0.55) Trailing Arm Point
POINT r
φ25 (1.0) Locate Hole
POINT q
Compensator Arm Center
84 (3.3)
30°
2.3 (0.09)
33 (1.3)
39 (1.5)
111 (4.4)
62 (2.4)
230 (9.1)
33 (1.3)
2 (0.08)
209 (8.2)
251 (9.9)
188 (7.4)
405 (16.0)
203 (8.0)
28 (1.1)
25 (1.0)
POINT p
φ25 (1.0) Locate Hole
POINT x
Lower Arm Center
POINT z
φ20 (0.8) Locate Hole
POINT y
φ20 (0.8) Locate Hole
E
E

Heater and Air Conditioning

Heater **21-1**
Air Conditioning **22-1**

SUPPLEMENTAL RESTRAINT SYSTEM (SRS)

The Integra SRS includes a driver's airbag, located in the steering wheel hub. In addition, all models except the RS model for Canada have a front passenger's airbag located in the dashboard above the glove box. Information necessary to safely service the SRS is included in this Service Manual. Items marked with an asterisk (*) on the contents page include, or are located near, SRS components. Servicing, disassembling or replacing these items will require special precautions and tools, and should therefore be done by an authorized Acura dealer.

⚠WARNING

- **To avoid rendering the SRS inoperative, which could lead to personal injury or death in the event of a severe frontal collision, all SRS service work must be performed by an authorized Acura dealer.**
- **Improper service procedures, including incorrect removal and installation of the SRS, could lead to personal injury caused by unintentional activation of the airbags.**
- **All SRS electrical wiring harnesses are covered with yellow insulation. Related components are located in the steering column, front console, dashboard, and dashboard lower panel, and in the dashboard above the glove box. Do not use electrical test equipment on these circuits.**

NOTE: The original radio has a coded theft protection circuit. Be sure to get the customer's code number before
— disconnecting the battery.
— removing the No. 32 (7.5 A) fuse from the under-hood fuse/relay box.
— removing the radio.
After service, reconnect power to the radio and turn it on. When the word "CODE" is displayed, enter the customer's 5-digit code to restore radio operation.

Heater

Illustrated Index 21-2
Heater Door Positions 21-3
Circuit Diagram 21-6
Troubleshooting
  Symptom Chart 21-8
  Flowcharts
    Blower Motor Speed 21-9
    Blower Motor 21-11
    Mode Control Motor 21-14
    Recirculation Control Motor 21-17
    Heater Control Panel Input/
      Output Signals 21-19
Blower Unit
  Replacement 21-20
  Overhaul 21-21
*Heater Unit
  Replacement 21-22
  Overhaul 21-24
  Defroster Door Adjustment 21-25
Heater Control Panel
  Replacement 21-25
  Overhaul 21-26
Heater Valve Cable
  Adjustment 21-27
Air Mix Control Cable
  Adjustment 21-27
Mode Control Motor
  Test 21-28
  Replacement 21-28
Recirculation Control Motor
  Test 21-29
  Replacement 21-29
Relay
  Test 21-30
Heater Fan Switch
  Test 21-30
Mode Control Switch
  Test 21-31
Recirculation Control Switch
  Test 21-31

*: Read SRS precautions before working in this area.

CAUTION:

- **All SRS electrical wiring harnesses are covered with yellow insulation.**
- **Before disconnecting any part of the SRS wire harness, connect the short connector(s).**
- **Replace the entire affected SRS harness assembly if it has an open circuit or damaged wiring.**

NOTE: The original radio has a coded theft protection circuit. Be sure to get the customer's code number before
– disconnecting the battery.
– removing the No. 32 (7.5 A) fuse from the underhood fuse/relay box.
– removing the radio.
After service, reconnect power to the radio and turn it on. When the word "CODE" is displayed, enter the customer's 5-digit code to restore radio operation.

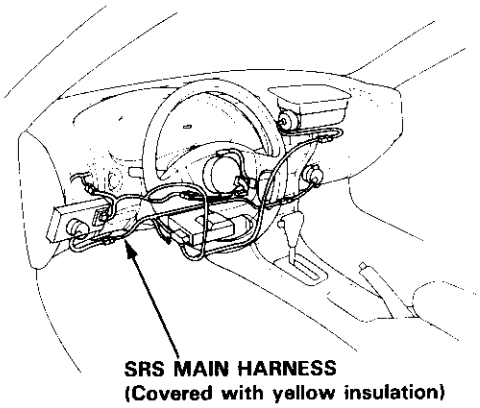

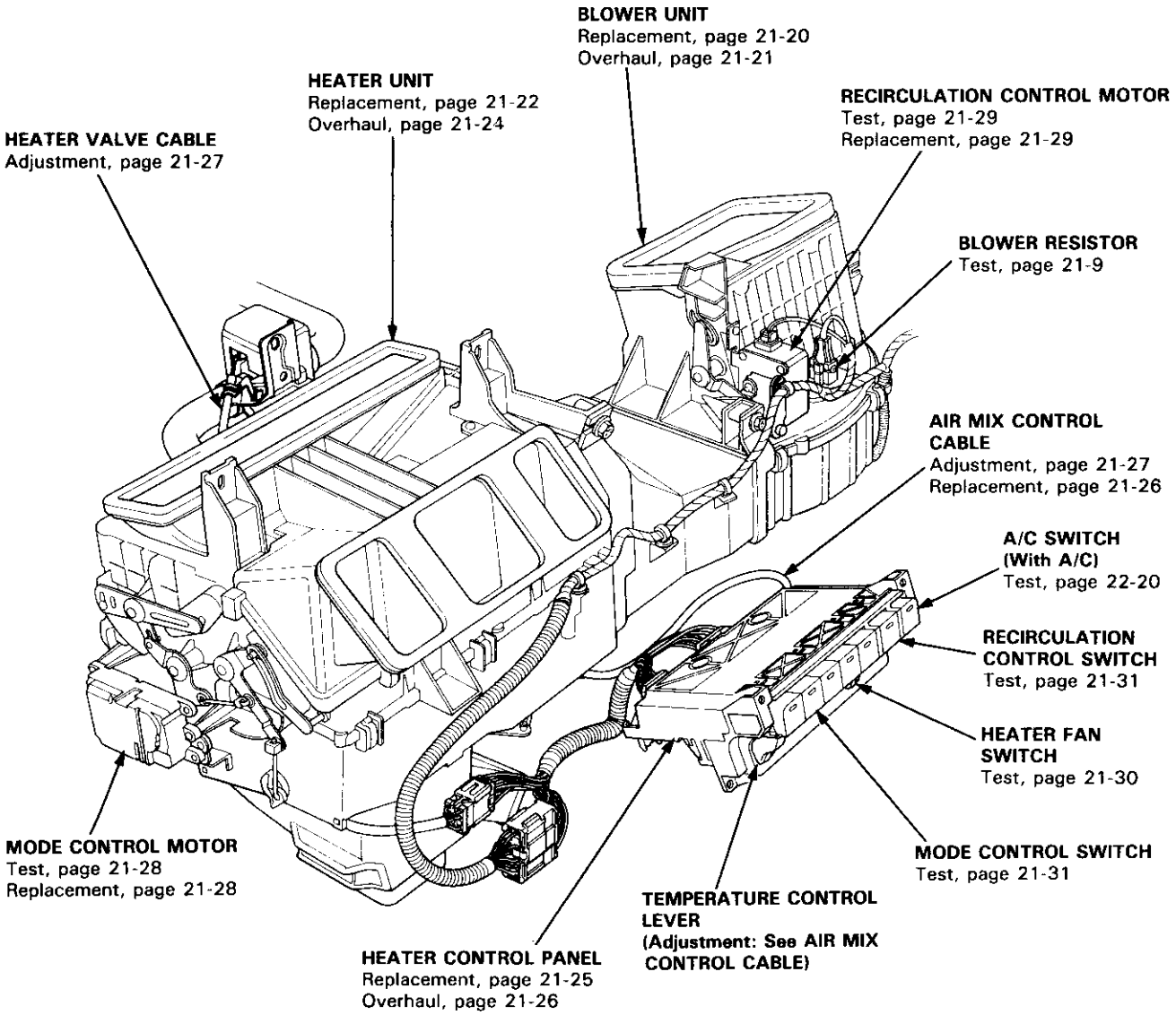

Heater Door Positions

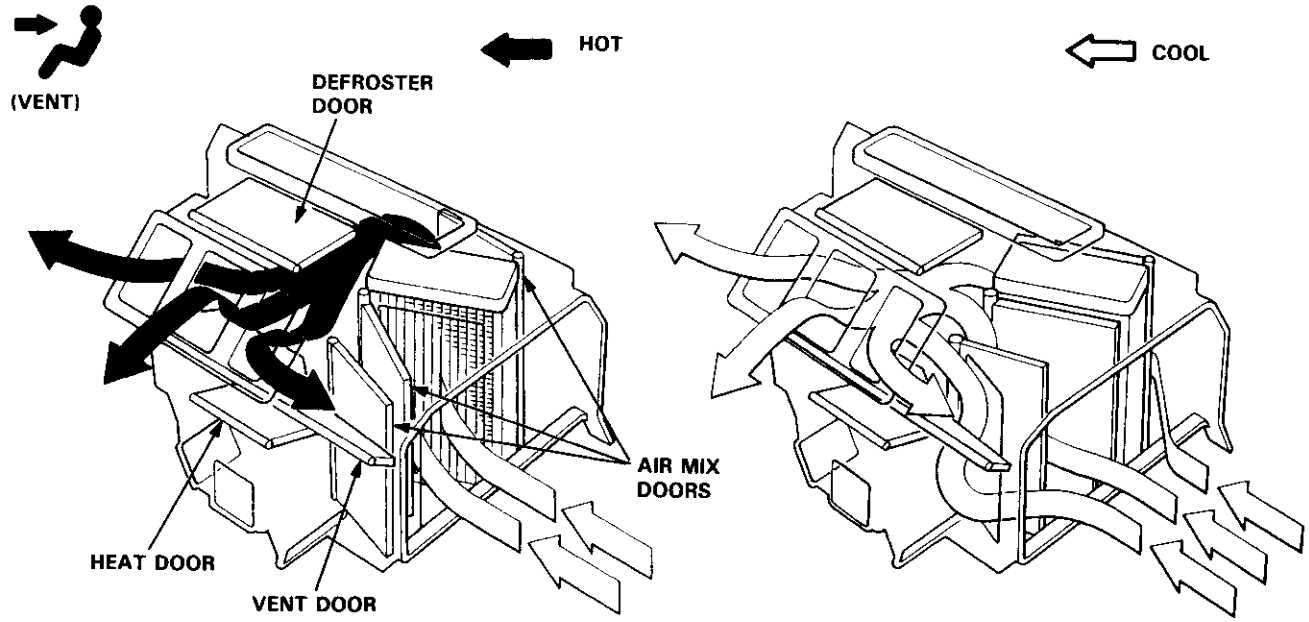

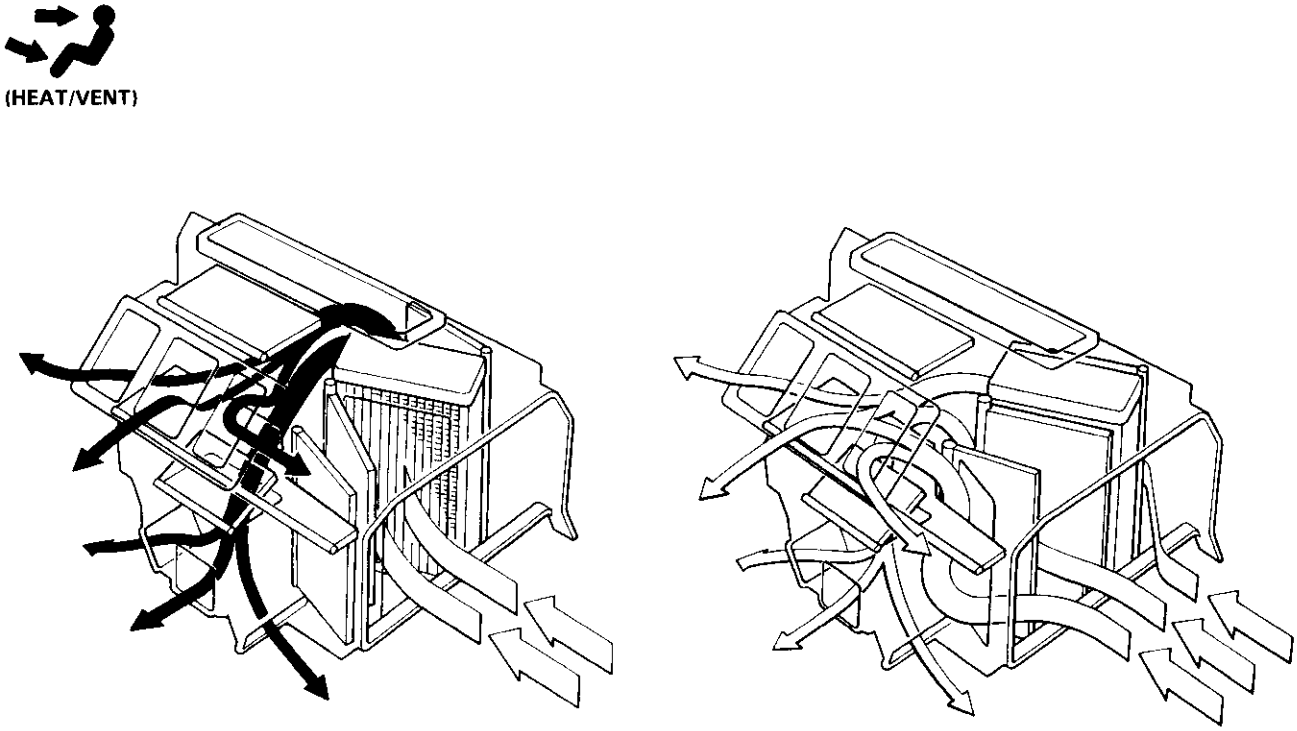

(cont'd)

Heater Door Positions

(cont'd)

(HEAT)

HOT

COOL

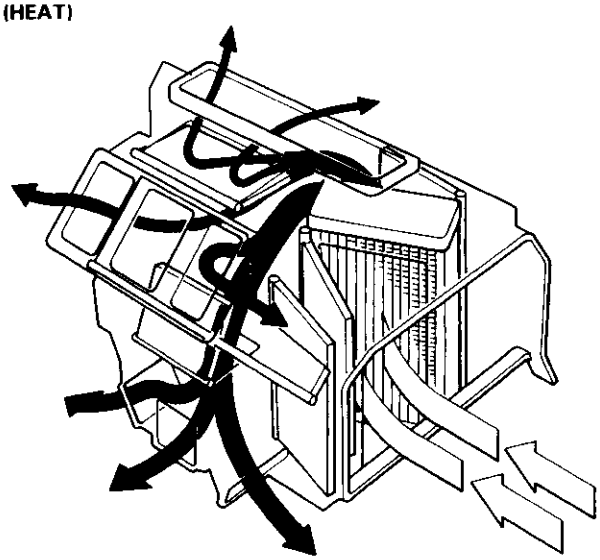

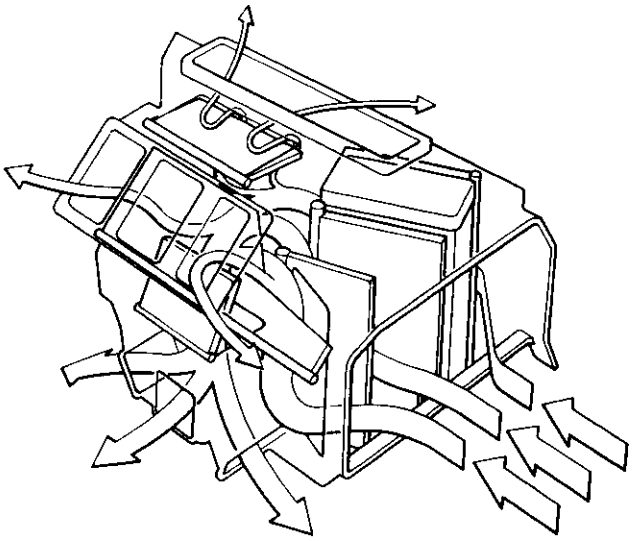

(HEAT/DEF)

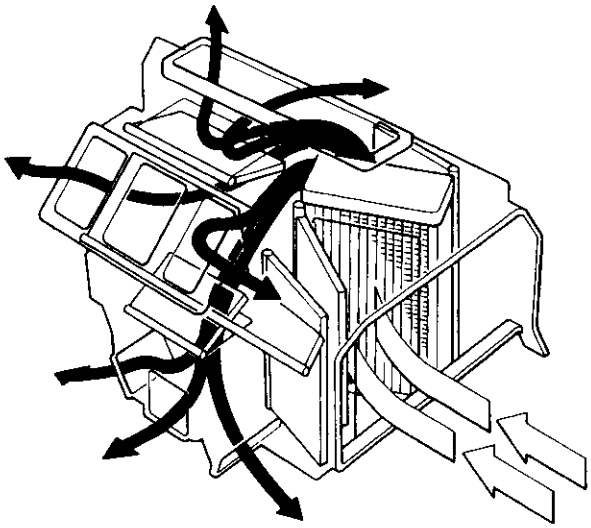

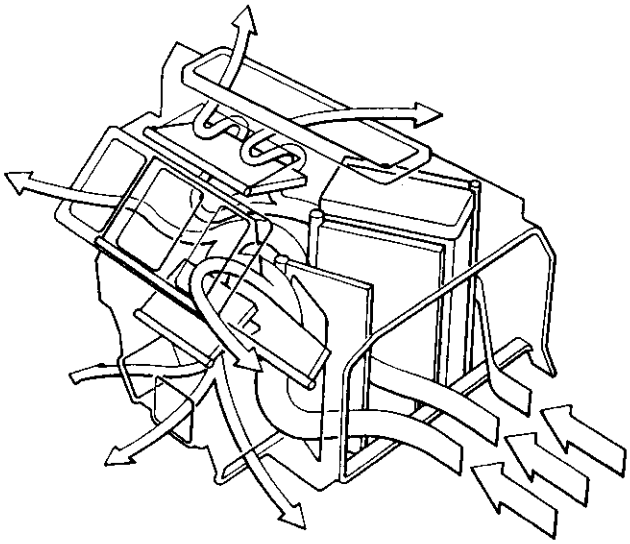

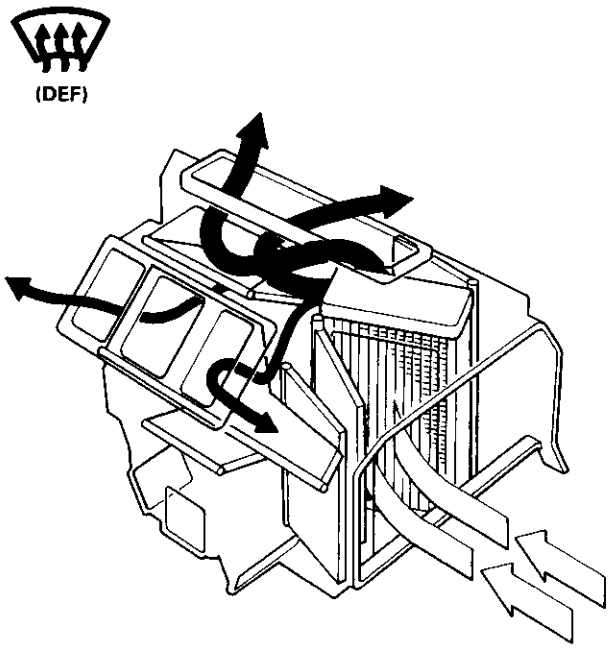
(DEF)

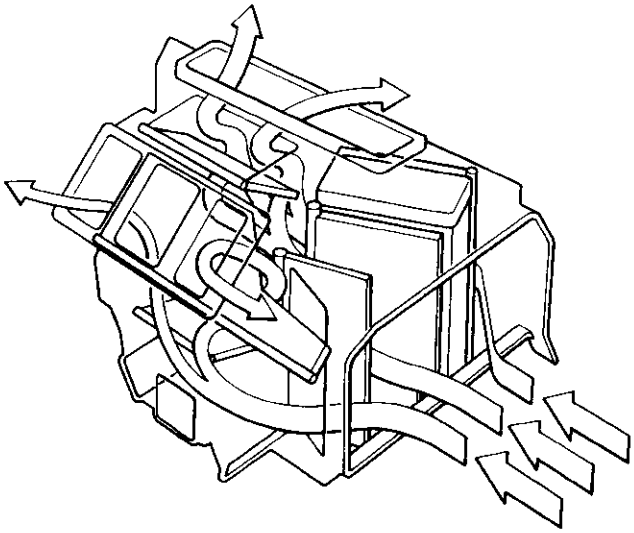

Circuit Diagram

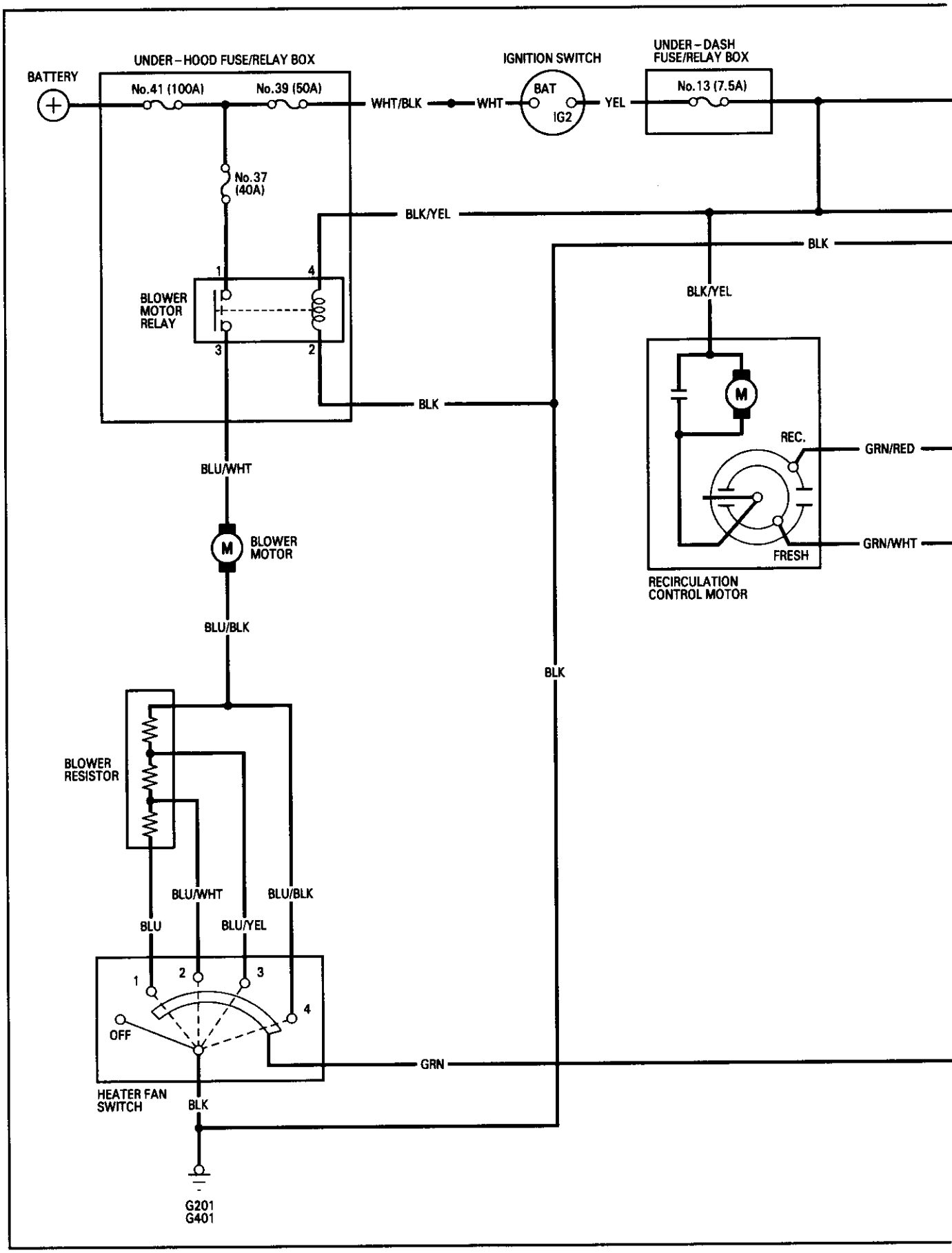

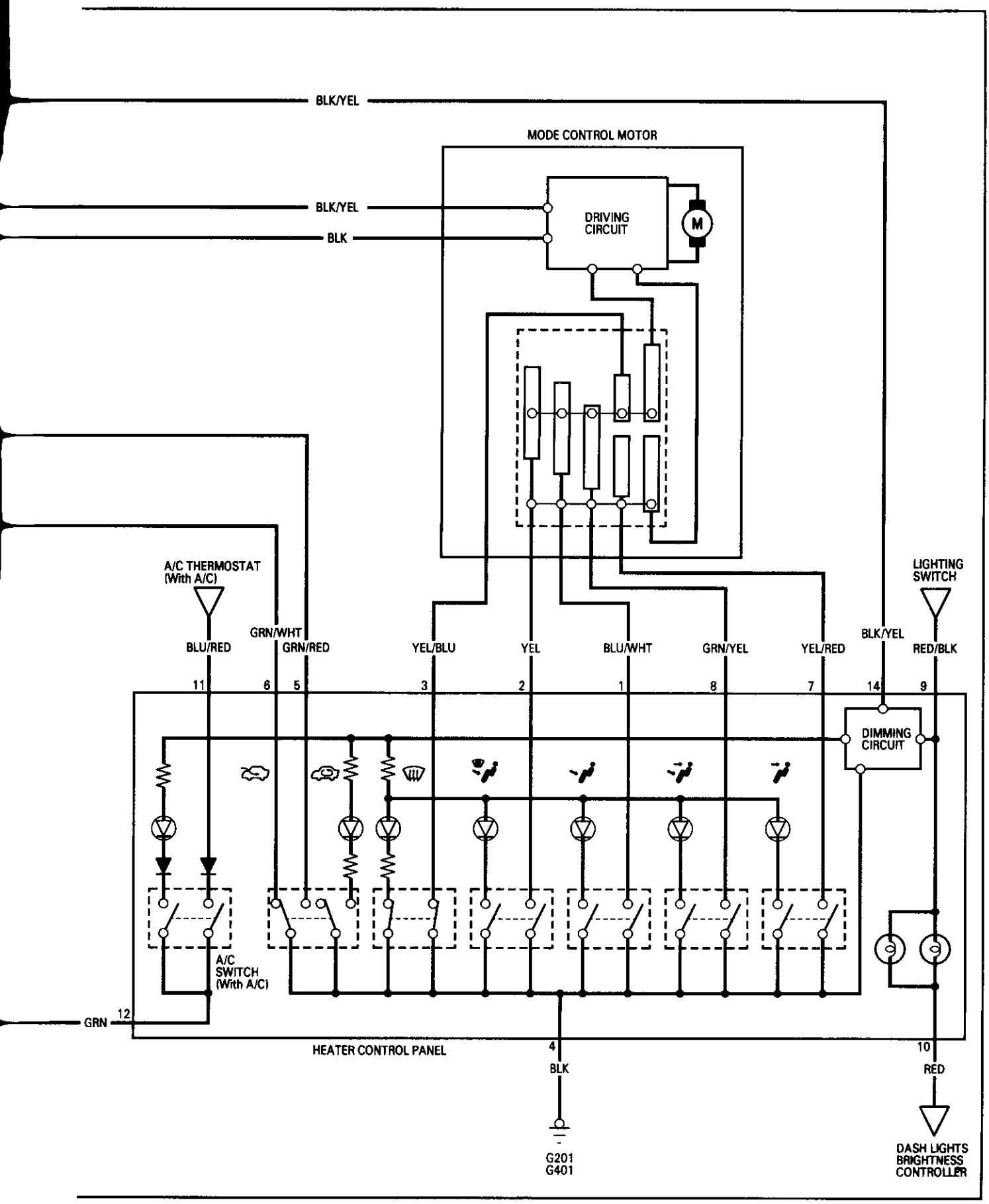
BLK/YEL
MODE CONTROL MOTOR
BLK/YEL
BLK
DRIVING CIRCUIT
M
A/C THERMOSTAT (With A/C)
LIGHTING SWITCH
BLU/RED
GRN/WHT
GRN/RED
YEL/BLU
YEL
BLU/WHT
GRN/YEL
YEL/RED
BLK/YEL
RED/BLK
11
6
5
3
2
1
8
7
14
9
DIMMING CIRCUIT
A/C SWITCH (With A/C)
GRN
12
HEATER CONTROL PANEL
4
BLK
G201
G401
10
RED
DASH LIGHTS BRIGHTNESS CONTROLLER

Troubleshooting

Symptom Chart

NOTE: Check the engine coolant level and allow the engine to warm up before troubleshooting.

SYMPTOM		REMEDY
Hot air flow is low.	Blower motor runs, but one or more speeds are inoperative.	Follow the flowchart (see page 21-9).
	Blower runs properly.	Check for the following: • Clogged heater duct • Clogged heater outlet • Incorrect door position
No hot air flow	Blower motor does not run at all.	Follow the flowchart (see page 21-11).
	Blower motor runs.	Check for the following: • Clogged heater duct • Clogged blower outlet • Clogged heater valve • Faulty air mix door • Heater valve cable adjustment (see page 21-27) • Air mix control cable adjustment (see page 21-27) • Faulty thermostat (see section 10) • Clogged evaporator (with air conditioning) • Frozen evaporator (with air conditioning)
Mode control motor does not run, or one or more modes are inoperative.		Follow the flowchart (see page 21-14).
Recirculation control door does not change between FRESH and RECIRCULATE.		Follow the flowchart (see page 21-17).

Blower Motor Speed

Blower motor runs, but one or more speeds are inoperative.

Turn the ignition switch ON (II), and the heater fan switch OFF.

Does the blower motor run? — YES → B → To page 21-10

NO

Turn the ignition switch OFF.

Disconnect the blower resistor 4P connector.

Measure the resistance between the No. 2 and No. 4 terminals of the blower resistor.

Is there approx. 2–3 ohms? — NO → **Replace the blower resistor.**

YES

Reconnect the blower resistor 4P connector.

Remove the heater control panel (see page 21-25).

Disconnect the heater fan switch 6P connector.

Turn the ignition switch ON (II).

At the heater fan switch 6P connector, ground each of these wires individually in the following order:
- BLU wire
- BLU/WHT wire
- BLU/YEL wire
- BLU/BLK wire

A

To page 21-10

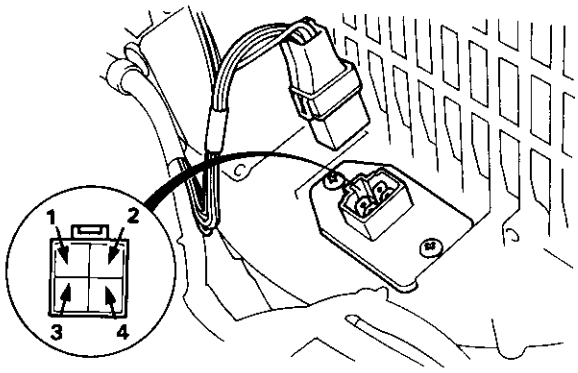

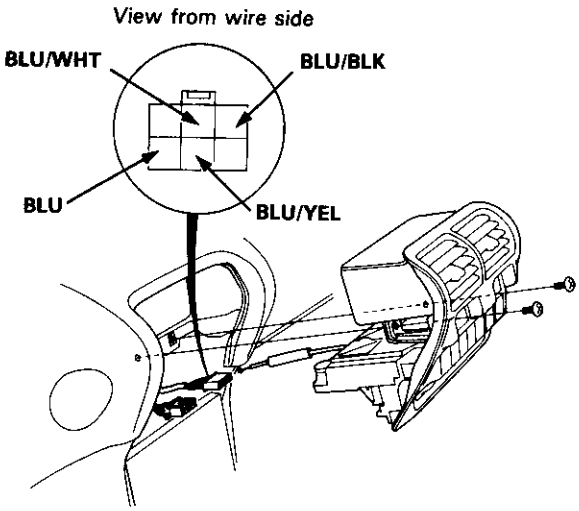

(cont'd)

Blower Motor Speed (cont'd)

From page 21-9

A

Does the blower motor run at progressively higher speeds?

YES → **Replace the heater fan switch.**

NO → **Repair open or cause of excessive resistance in the appropriate wire(s) between the heater fan switch and the blower resistor.**

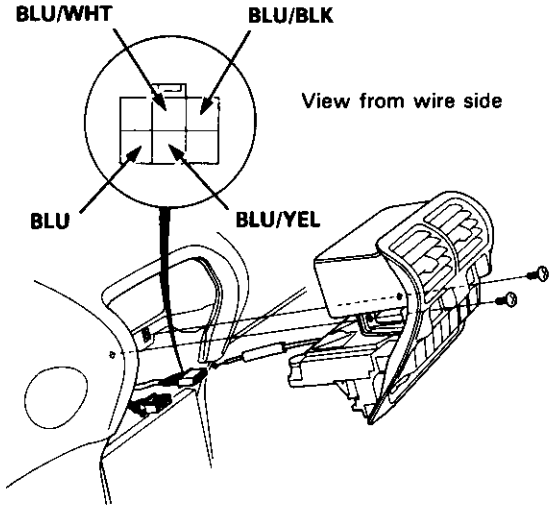

From page 21-9

B

Turn the ignition switch OFF.

Remove the heater control panel (see page 21-25).

Disconnect the heater fan switch 6P connector.

Disconnect the blower resistor 4P connector.

Check each wire for continuity between the heater fan switch 6P connector and body ground.
- BLU wire
- BLU/WHT wire
- BLU/YEL wire
- BLU/BLK wire

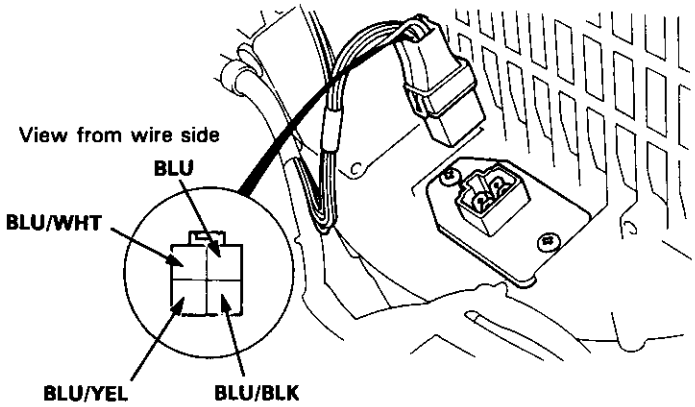

Is there continuity?

NO → **Replace the heater fan switch.**

YES → **Repair short in the wire(s) between the heater fan switch and the blower resistor.**

Blower Motor

Blower motor does not run at all.

Check the No. 37 (40 A) fuse in the under-hood fuse/relay box.

Is the fuse OK?
- NO → **Replace the fuse.**
- YES ↓

At the blower motor 2P connector, connect the BLU/BLK wire terminal to body ground with a jumper wire.

Turn the ignition switch ON (II).

Does the blower motor run?
- YES → To page 21-12
- NO ↓

Disconnect the blower motor 2P connector, and measure the voltage between the BLU/WHT wire terminal (+) and body ground (−).

Is there battery voltage?
- YES → **Replace the blower motor.**
- NO ↓

Turn the ignition switch OFF.

Remove the blower motor relay from the under-hood fuse/relay box and test it (see page 21-30).

Is the relay OK?
- NO → **Replace the blower motor relay.**
- YES ↓

Measure the voltage between the No. 1 terminal (+) and body ground (−).

Is there battery voltage?
- NO → **Replace the under-hood fuse/relay box.**
- YES ↓

To page 21-13

View from wire side

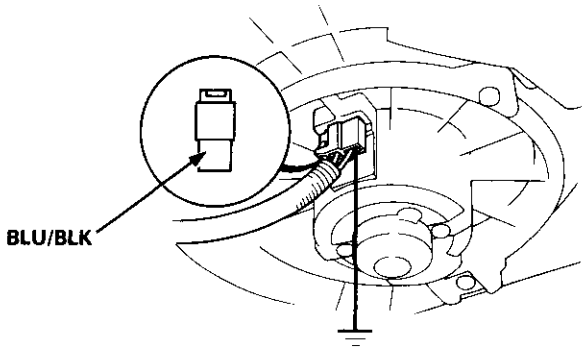

View from wire side

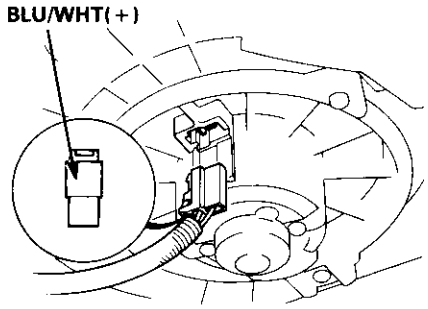

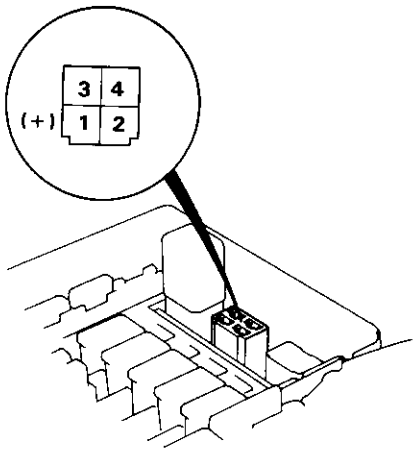

(cont'd)

Blower Motor (cont'd)

From page 21-11

Turn the ignition switch OFF.

Remove the heater control panel (see page 21-25).

Disconnect the heater fan switch 6P connector.

Turn the ignition switch ON (II).

Measure the voltage between the BLU/BLK wire terminal (+) and body ground (−).

Is there battery voltage?

- NO → **Repair open in the BLU/BLK wire between the blower motor and the heater fan switch.**
- YES ↓

Turn the ignition switch OFF.

Check for continuity in the BLK wire between the heater fan switch and body ground.

Is there continuity?

- NO → **Check for an open in the BLK wire between the heater fan switch and body ground. If the wire is OK, check for poor ground at G201 and 401.**
- YES ↓

Replace the heater fan switch.

View from wire side

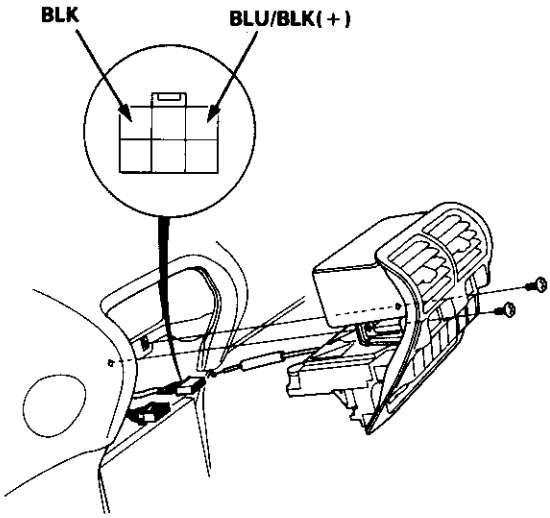

From page 21-11

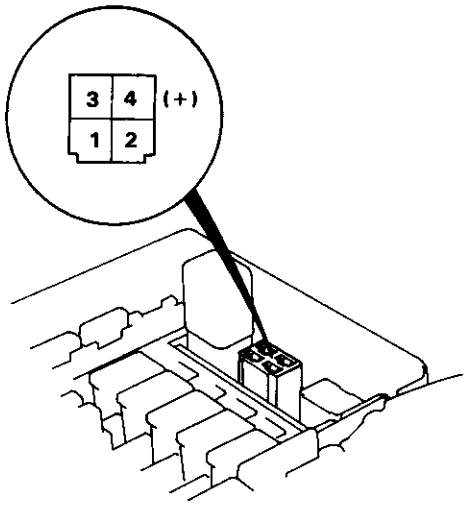

Turn the ignition switch ON (II).

Measure the voltage between the No. 4 terminal (+) and body ground (−).

Is there battery voltage?

NO → **Repair open in the BLK/YEL wire between the under-hood fuse/relay box and the under-dash fuse/relay box.**

YES

Turn the ignition switch OFF.

Check for continuity between the No. 2 terminal and body ground.

Is there continuity?

NO → **Check for an open in the BLK wire between the under-hood fuse/relay box and body ground. If the wire is OK, check for poor ground at G201 and G401.**

YES

Repair open in the BLU/WHT wire between the under-hood fuse/relay box and the blower motor.

Mode Control Motor

Mode control motor does not run, or one or more mode are inoperative.

Disconnect the mode control motor 8P connector.

Turn the ignition switch ON (II).

Measure the voltage between the BLK/YEL wire terminal (+) and body ground (−).

Is there battery voltage?

NO → **Repair open in the BLK/YEL wire between the under-dash fuse/relay box and the mode control motor.**

YES

Turn the ignition switch OFF.

To page 21-15

View from wire side

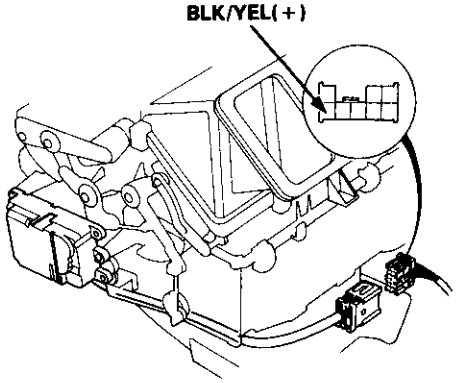

From page 21-14

Check for continuity in the BLK wire between the mode control motor and body ground.

Is there continuity?

NO → **Check for an open in the BLK wire between the mode control motor and body ground. If the wire is OK, check for poor ground at G201 and G401.**

YES

Test the mode control motor (see page 21-28).

Is the mode control motor OK?

NO → Remove the mode control motor (see page 21-28).

Check the mode control linkage and doors for smooth movement.

Do the mode control linkage and doors move smoothly?

NO → **Repair the mode control linkage or doors.**

YES → **Replace the mode control motor.**

YES

Remove the heater control panel (see page 21-25).

Disconnect the heater control panel 14P connector.

Check each wire for continuity between the mode control motor and body ground.
- YEL/BLU wire
- YEL wire
- BLU/WHT wire
- GRN/YEL wire
- YEL/RED wire

Is there continuity?

YES → **Repair any short in the wire(s) between the mode control motor and the heater control panel.**

NO

Check the same wires for voltage.

Is there any voltage?

YES → **Repair short to power in the BLK/YEL wire between the mode control motor and the heater control panel. (This damages the heater control panel.)**

NO

To page 21-16

View from wire side

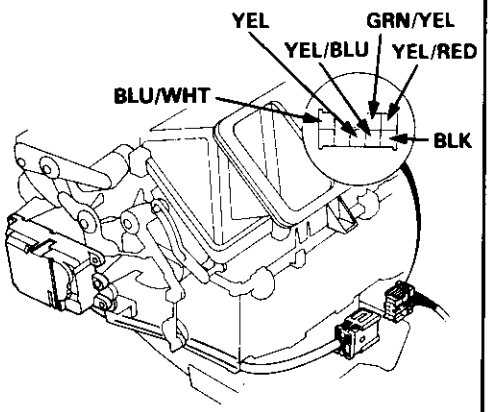

(cont'd)

Mode Control Motor (cont'd)

From page 21-15

Check each wire for continuity between the mode control motor and the heater control panel.
- YEL/BLU wire
- YEL wire
- BLU/WHT wire
- GRN/YEL wire
- YEL/RED wire

Is there continuity?

NO → **Repair any open in the wire(s) between the mode control motor and the heater control panel.**

YES → **Replace the heater control panel.**

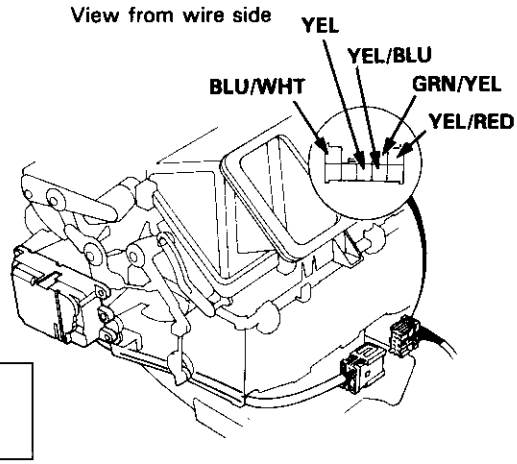

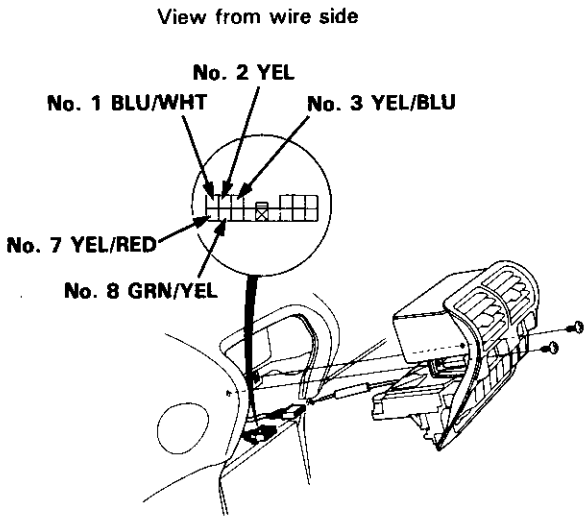

Recirculation Control Motor

Recirculation control door does not change between FRESH and RECIRCULATE.

Disconnect the recirculation control motor 4P connector.

Turn the ignition switch ON (II).

Measure the voltage between the BLK/YEL wire terminal (+) and body ground (−).

Is there battery voltage?

NO → **Repair open in the BLK/YEL wire between the under-dash fuse/relay box and the recirculation control motor.**

YES

Turn the ignition switch OFF.

To page 21-18

View from wire side

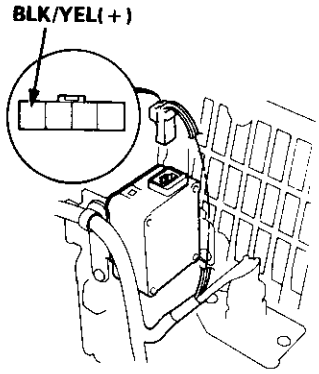

(cont'd)

Recirculation Control Motor (cont'd)

From page 21-17

Test the recirculation control motor (see page 21-29).

Is the recirculation control motor OK?

- NO → Remove the recirculation control motor (see page 21-29). → Check the recirculation control linkage and door for smooth movement. → Do the recirculation control linkage and door move smoothly?
  - NO → **Repair the recirculation control linkage or door.**
  - YES → **Replace the recirculation control motor.**
- YES → Remove the heater control panel (see page 21-25).

Disconnect the heater control panel 14P connector.

Check for continuity in the GRN/WHT and GRN/RED wires between the recirculation control motor and body ground.

Is there continuity?

- YES → **Repair short in the GRN/WHT and/or GRN/RED wire(s) between the recirculation control motor and the heater control panel.**
- NO → Check the same wires for voltage.

Is there any voltage?

- YES → **Repair short to power in the BLK/YEL wire between the recirculation control motor and the heater control panel. (This damages the heater control panel.)**
- NO → Check for continuity in the GRN/WHT and GRN/RED wires between the recirculation control motor and the heater control panel.

Is there continuity?

- NO → **Repair open in the GRN/WHT and/or GRN/RED wire(s) between the recirculation control motor and the heater control panel.**
- YES → **Replace the heater control panel.**

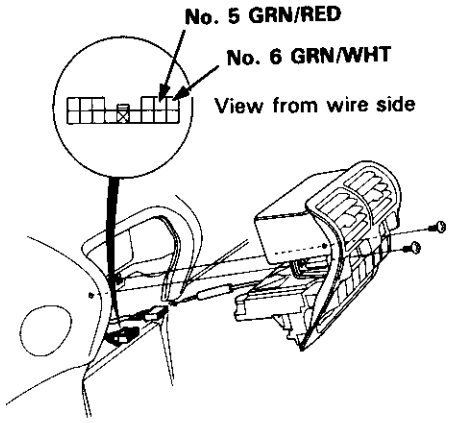

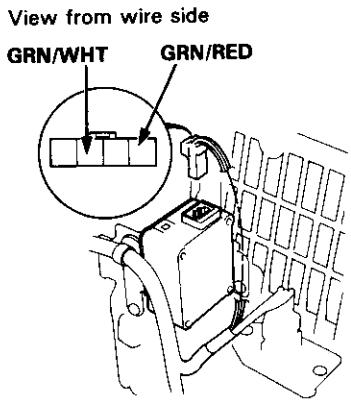

Heater Control Panel Input/Output Signals

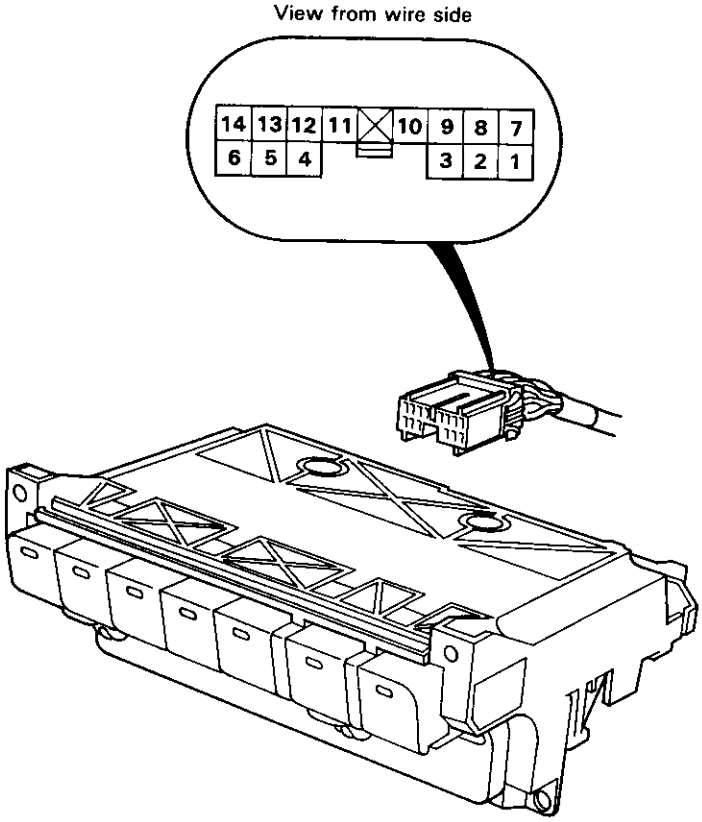

No.	Wire Color	Signal		No.	Wire Color	Signal	
1	BLU/WHT	HEAT	INPUT	8	GRN/YEL	HEAT/VENT	INPUT
2	YEL	HEAT/DEF	INPUT	9	RED/BLK	COMBINATION LIGHT SWITCH	INPUT
3	YEL/BLU	DEF	INPUT	10	RED	BRIGHTNESS CONTROLLER	OUTPUT
4	BLK	GROUND	OUTPUT	11	BLU/RED	A/C THERMOSTAT	INPUT
5	GRN/RED	RECIRCULATE	INPUT	12	GRN	HEATER FAN SWITCH	OUTPUT
6	GRN/WHT	FRESH	INPUT	13			
7	YEL/RED	VENT	INPUT	14	BLK/YEL	IG2	INPUT

Blower Unit

Replacement

NOTE: The blower motor, recirculation control motor and blower resistor can be replaced without removing the blower unit (see page 21-21).

1. Remove the glove box (see section 20).

2. Remove the four bolts and the glove box frame.

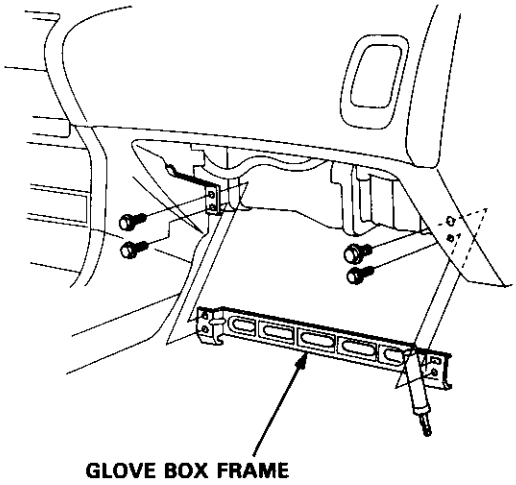

Without Air Conditioning

3-a. Remove the wire harness clips from the heater duct. Remove the four self-tapping screws and the heater duct.

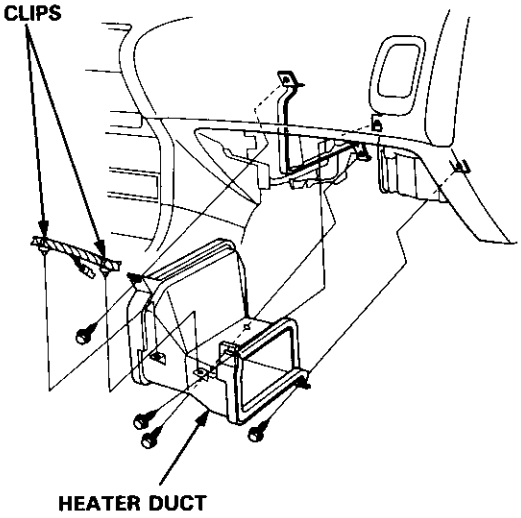

With Air Conditioning

3-b. Remove the evaporator (see page 22-26).

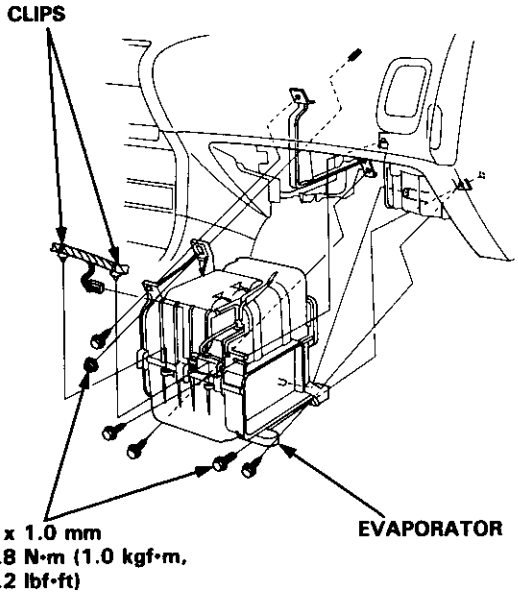

4. Disconnect the connectors from the blower motor, blower resistor and the recirculation control motor.

5. Remove the wire harness clip from the recirculation control motor, and release the wire harness from the clamp on the blower unit.
   Remove the two mounting bolts, mounting nut and the blower unit.

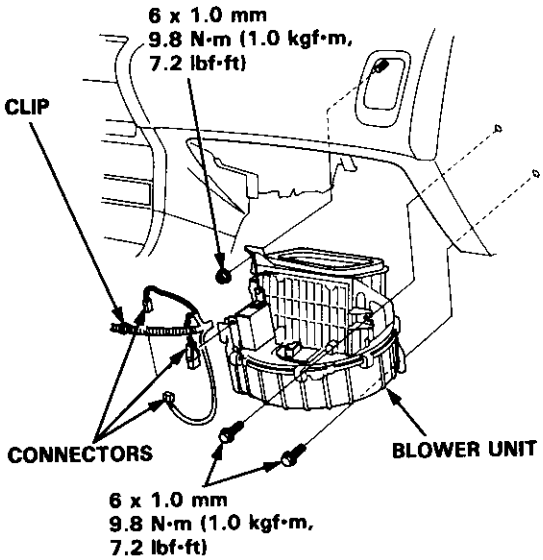

6. Install in the reverse order of removal, and make sure there are no air leaks.

Overhaul

NOTE:

- Before reassembly, make sure that the recirculation control door and linkage move smoothly without binding.
- When reattaching the recirculation control motor, make sure its positioning will not allow the recirculation control door to be pulled too far. Attach the recirculation control motor and all links, then connect power and ground, and watch the movement of the recirculation control door.

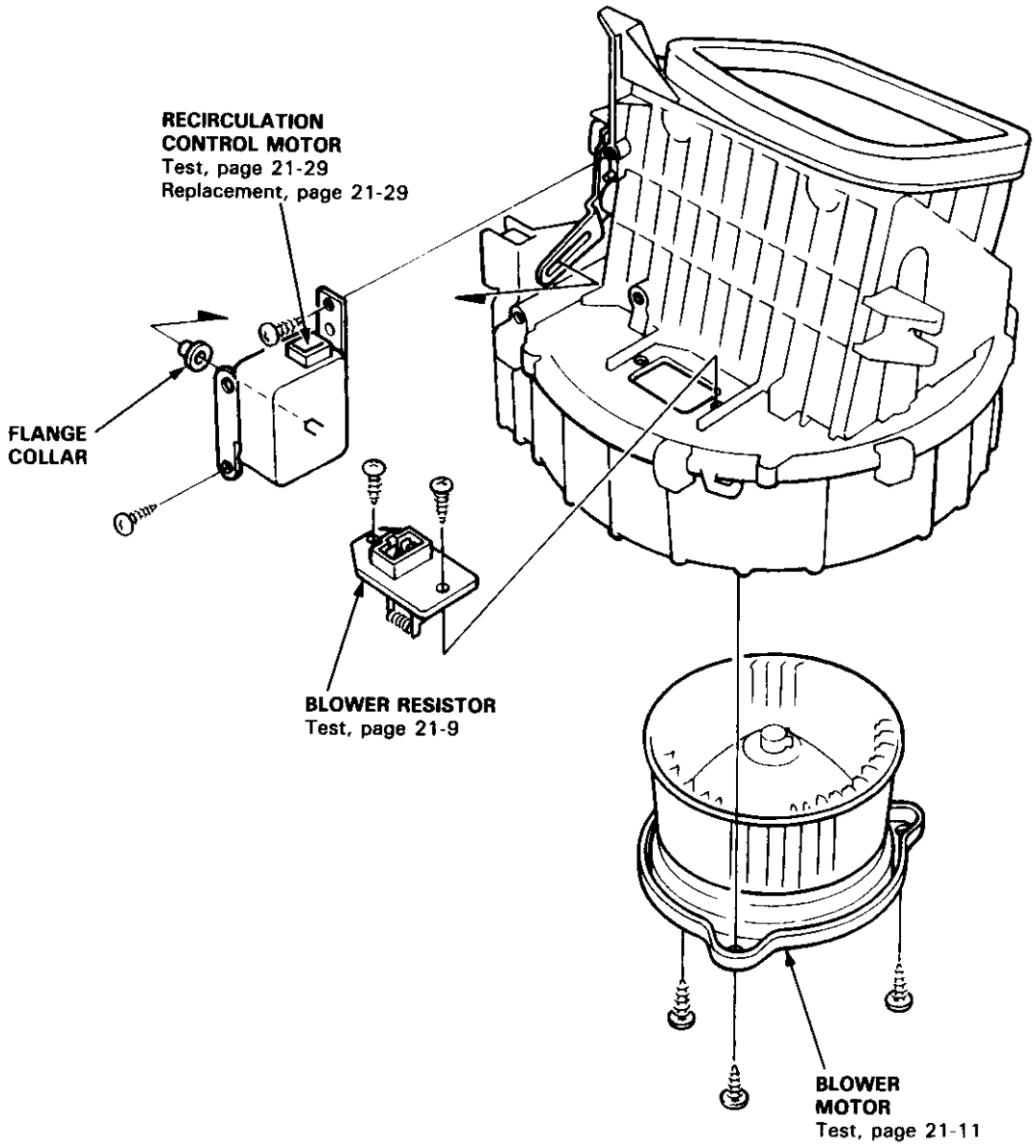

Heater Unit

Replacement

CAUTION:
- **All SRS electrical wiring harnesses are covered with yellow insulation.**
- **Before disconnecting any part of the SRS wire harness, connect the short connector(s).**
- **Replace the entire affected SRS harness assembly if it has an open circuit or damaged wiring.**

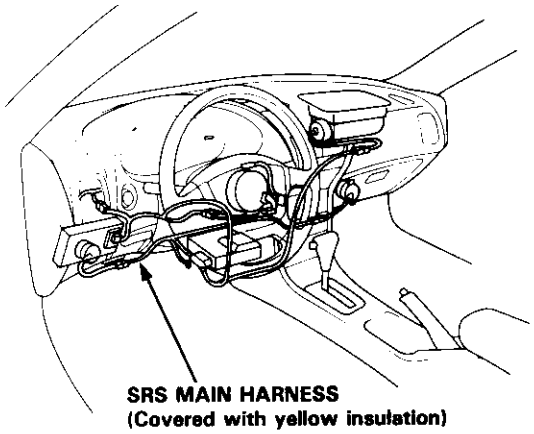

NOTE: The original radio has a coded theft protection circuit. Be sure to get the customer's code number before
– disconnecting the battery.
– removing the No. 32 (7.5 A) fuse from the underhood fuse/relay box.
– removing the radio.
After service, reconnect power to the radio and turn it on. When the word "CODE" is displayed, enter the customer's 5-digit code to restore radio operation.

1. When the engine is cool, drain the engine coolant from the radiator (see section 10).

   ⚠ WARNING Do not remove the radiator cap when the engine is hot; the engine coolant is under pressure and could severely scald you.

2. Snap open the clamp and disconnect the heater valve cable from the heater valve arm.

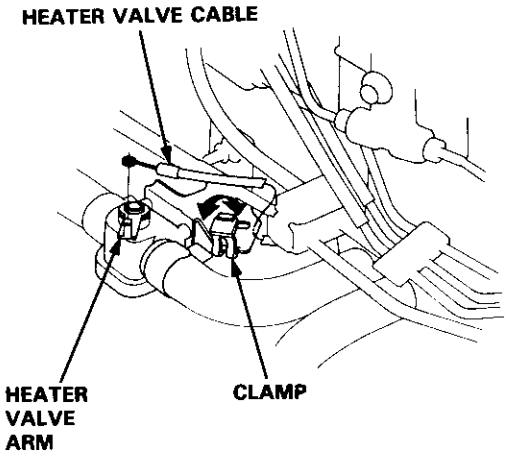

3. Disconnect the heater hoses from the heater unit.

   CAUTION: Engine coolant will damage paint. Quickly rinse any spilled engine coolant from painted surfaces.

   NOTE: Engine coolant will run out when the hoses are disconnected, drain it into a clean drip pan.

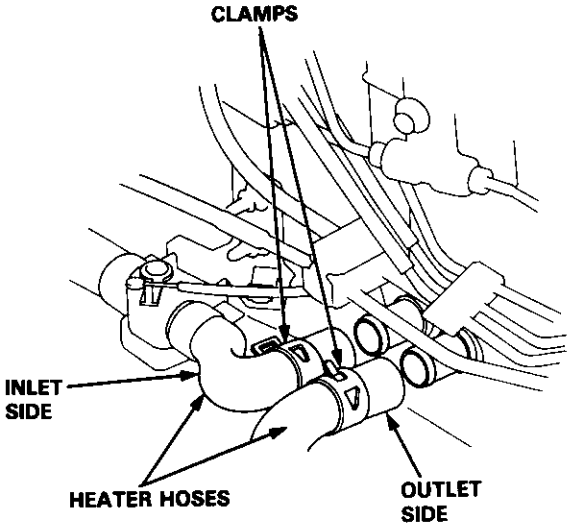

4. Remove the mounting nut from the heater unit.

   NOTE: When removing the mounting nut, take care not to damage or bend the fuel pipes, brake pipes, etc.

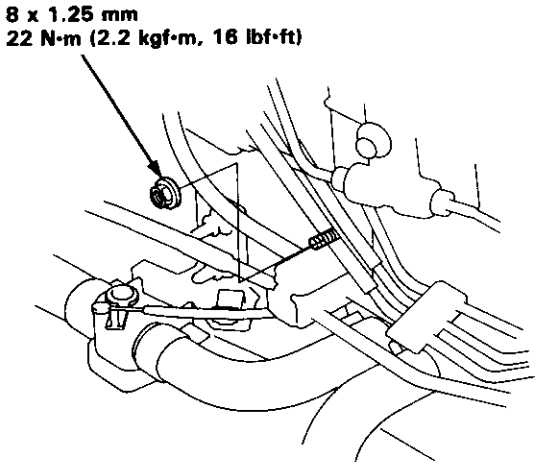

5. Remove the dashboard (see section 20).

6. Remove the heater duct (see page 21-20) or the evaporator (see page 22-26).

7. Remove the two bolts, nut and the passenger's SRS beam.

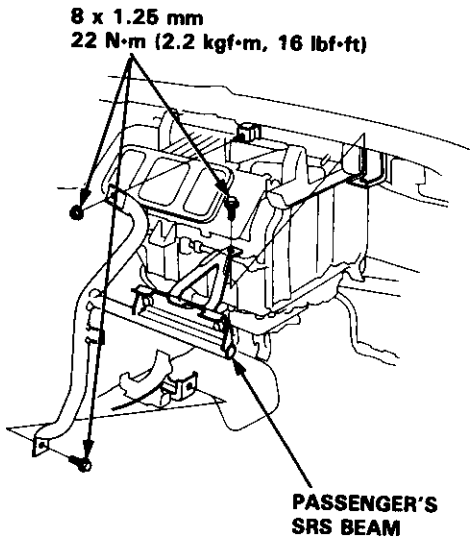

8. Disconnect the mode control motor connector, and remove the wire harness clip from the heater unit. Remove the two mounting nuts and the heater unit.

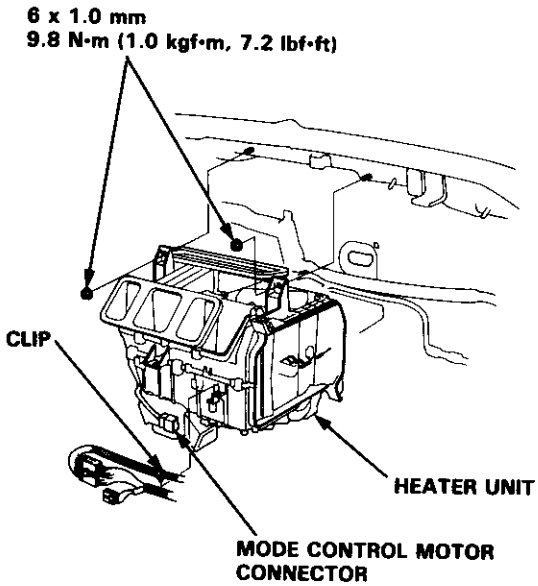

9. Install in the reverse order of removal, and:

- apply sealant to the grommets.
- do not interchange the inlet and outlet hoses. Make sure that the hose clamps are secure.
- loosen the bleed bolt on the engine and refill the radiator and coolant reservoir with the proper engine coolant mixture (see section 10). Tighten the bleed bolt when all the trapped air has escaped and engine coolant begins to flow from it (see section 10).
- connect all cables and make sure they are properly adjusted (see page 21-27).

Heater Unit

Overhaul

1. Remove the screw and the damper arm cover.
2. Disconnect the link from the damper arm, and remove the screw and the damper arm.
3. Remove the two screws and the heater core cover.
4. Remove the screw and the pipe clamp.
5. Pull out the heater core.

   NOTE: Be careful not to bend the inlet and outlet pipes during heater core removal.
6. Assemble in the reverse order of disassembly.

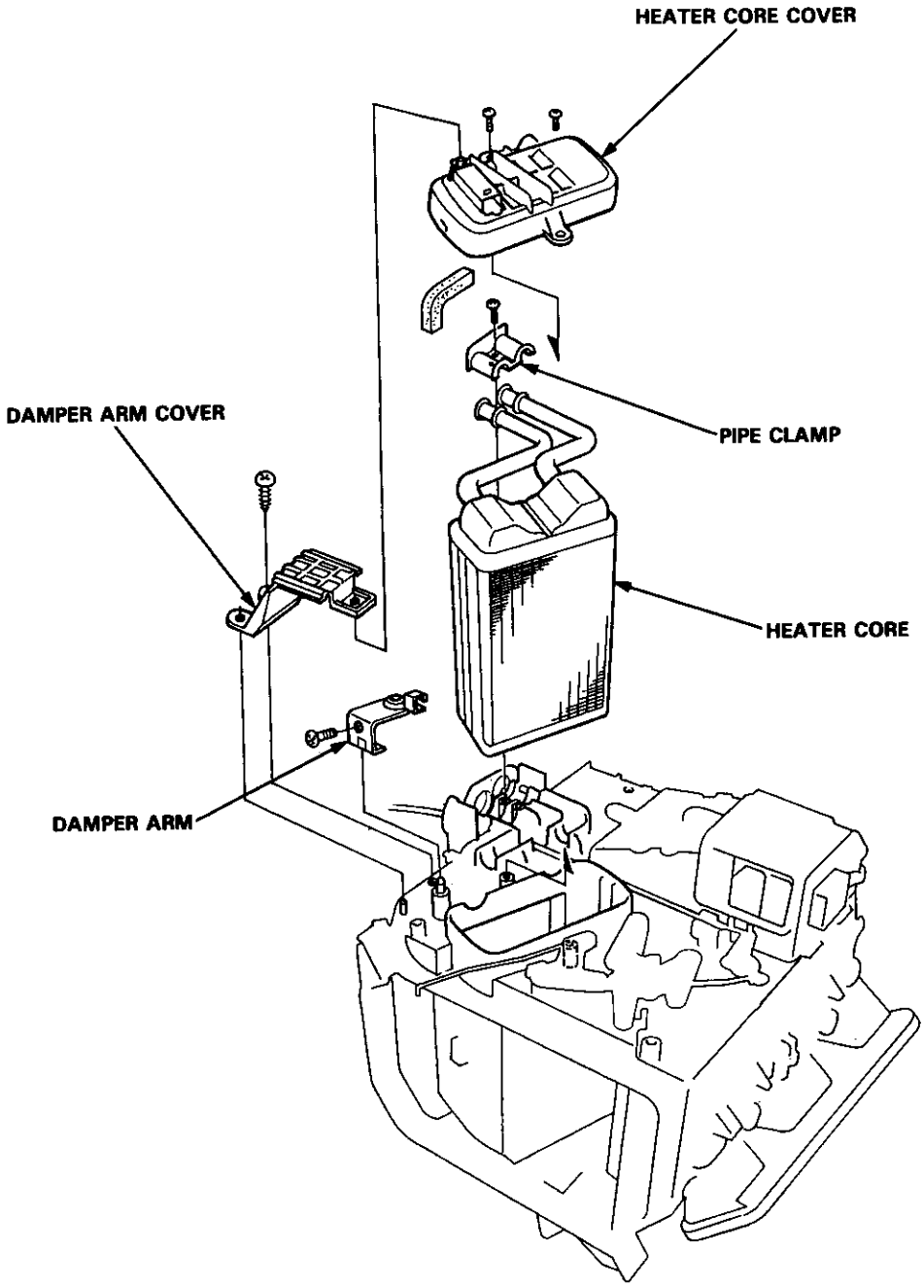

Defroster Door Adjustment

1. Set the mode control switch on HEAT.
2. Loosen the adjusting screw.
3. Turn the adjusting arm to the left, as shown, so that there will be no heat leakage from the defroster door.
4. Tighten the adjusting screw.

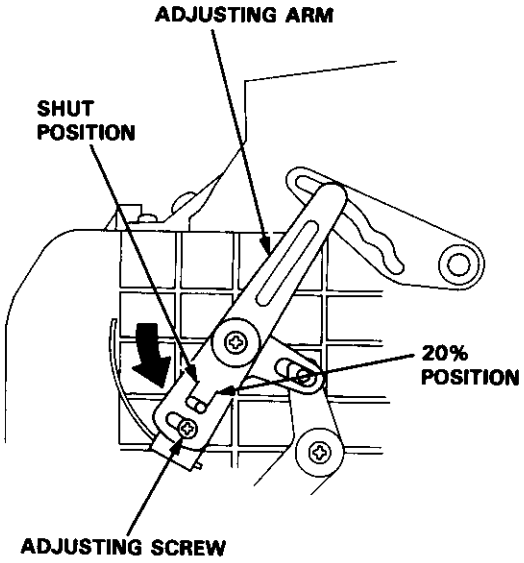

Replacement

1. Disconnect the air mix control cable from the heater unit (see page 21-27).
2. Remove the rear window defogger switch and the hazard warning switch.
3. Remove the two self-tapping screws, then pull out the heater control panel and the center air vent. Disconnect the connectors, and remove the heater control panel and the center air vent.

   NOTE: The locking tabs of the hazard warning switch and heater control panel connectors are on the bottom.

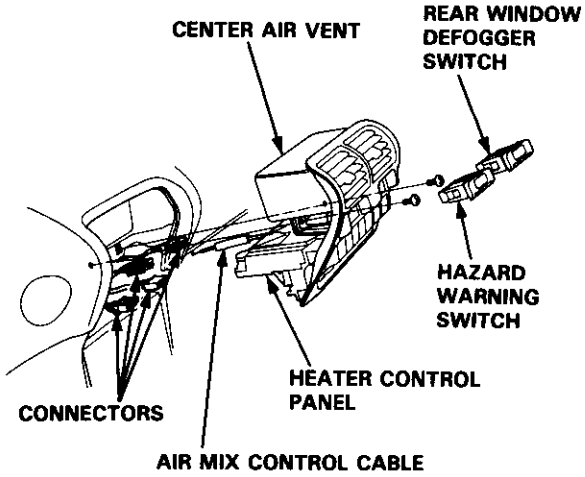

4. Remove the four self-tapping screws and the center air vent.

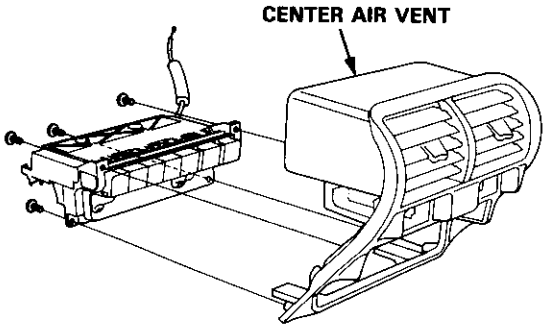

5. Install in the reverse order of removal, and adjust the air mix control cable at the heater unit (see page 21-27). If necessary, adjust the heater valve cable (see page 21-27).

Overhaul

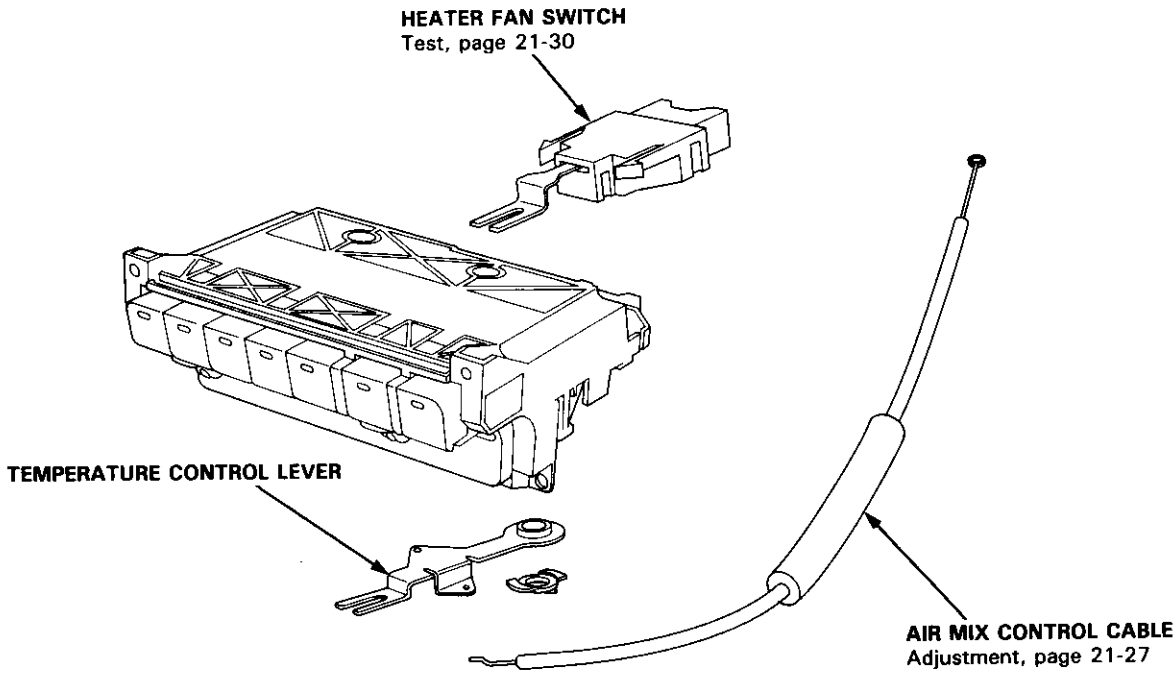

Air Mix Control Cable Replacement

1. Remove the air mix control cable.
2. Hook the tip of the new air mix control cable to the temperature control lever, and push the cable housing until it is locked.

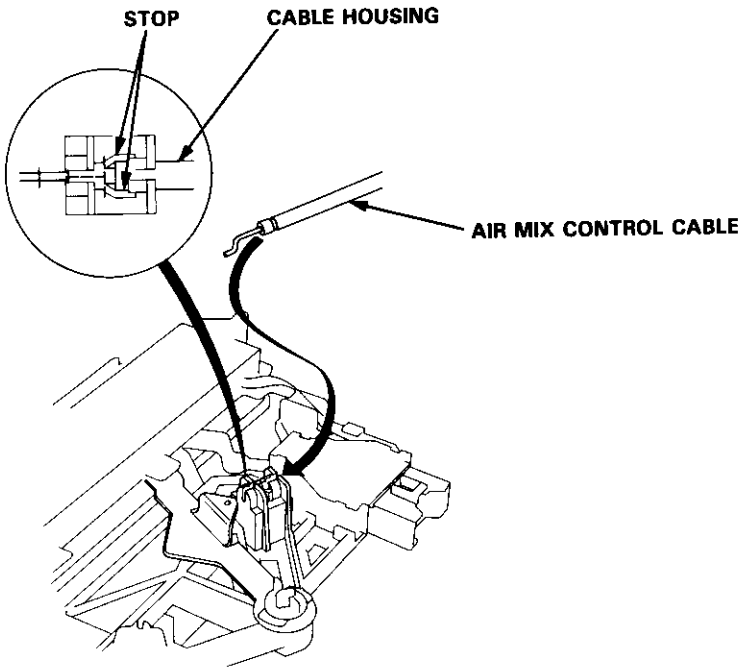

NOTE: After assembly, check that the temperature control lever slides smoothly through the full stroke from right to left.

Heater Valve Cable

Adjustment

1. Disconnect the heater valve cable from the heater valve arm and the clamp, and from the heater control arm and the clamp.

2. Set the temperature control lever to MAX. HEAT.

3. Turn the heater control arm as shown, and connect the end of the heater valve cable to the heater control arm.

4. Gently slide the heater valve cable housing back from the end enough to take up any slack in the heater valve cable, but not enough to make the temperature control lever move. Hold the end of the heater valve cable housing against the stop, then snap the heater valve cable housing into the clamp.

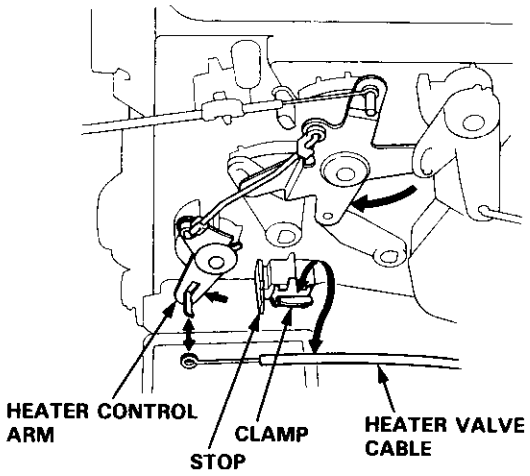

5. Turn the heater valve arm as shown, and connect the end of the heater valve cable to the heater valve arm.

6. Gently slide the heater valve cable housing back from the end enough to take up any slack in the heater valve cable, but not enough to make the temperature control lever move, then snap the heater valve cable housing into the clamp.

   NOTE: The air mix control cable should always be adjusted whenever the heater valve cable has been disconnected.

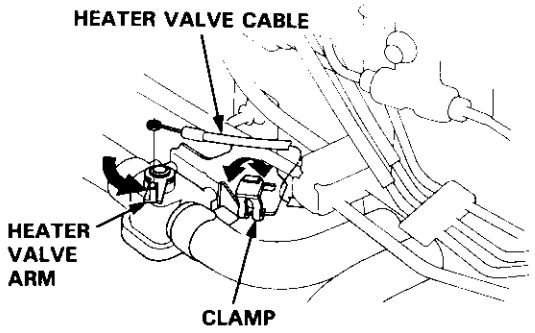

Air Mix Control Cable

Adjustment

1. Disconnect the air mix control cable from the air mix control arm and the clamp.

2. Set the temperature control lever to MAX. HEAT.

3. Turn the air mix control arm as shown, and connect the end of the air mix control cable to the air mix control arm.

4. Gently slide the air mix control cable housing back from the end enough to take up any slack in the air mix control cable, but not enough to make the temperature control lever move, then snap the air mix control cable housing into the clamp.

   NOTE: The heater valve cable should always be adjusted whenever the air mix control cable has been disconnected.

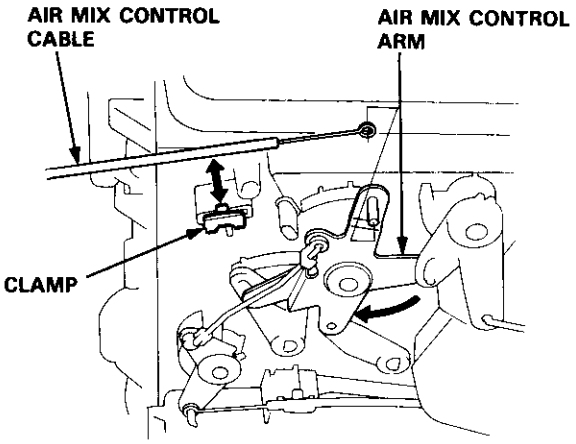

Mode Control Motor

Test

1. Connect battery power to the No. 4 terminal of the mode control motor and connect ground to the No. 8 terminal.

2. Using a jumper wire, short the No. 8 terminal individually to the No. 1, 2, 3, 6 and 7 terminals, in that order.

   - Each time the short circuit is made, the mode control motor should run smoothly and stop.

   NOTE: If the mode control motor does not run when shorting the first terminal, short that terminal again after shorting the other terminals.
   The mode control motor is normal if it runs when shorting the first terminal again.

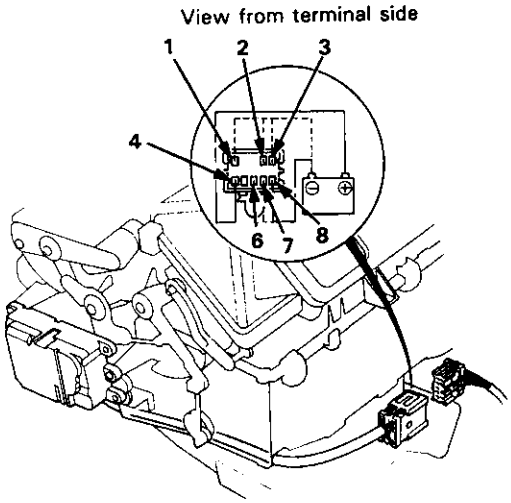

3. If the mode control motor does not run in step 2, remove it, and check the mode control linkage and doors for smooth movement. If the mode control linkage and doors move smoothly, replace the mode control motor.

Replacement

1. Disconnect the mode control motor 8P connector, and remove it from the heater unit.

2. Remove the two screws, mode control motor, and flange collar.

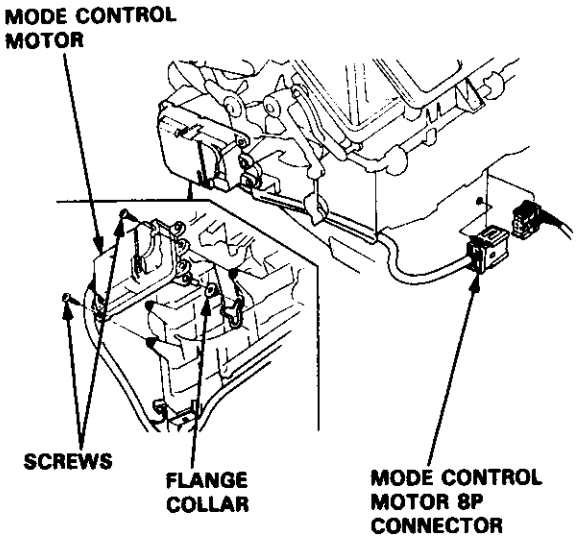

3. Install in the reverse order of removal. After installation, make sure the mode control motor runs smoothly.

Recirculation Control Motor

Test

1. Connect battery power to the No. 1 terminal of the recirculation control motor, and connect ground to the No. 2 and No. 4 terminals; the recirculation control motor should run smoothly.

2. Disconnect the ground from the No. 2 or No. 4 terminals; the recirculation control motor should stop at FRESH or RECIRCULATE.

   CAUTION: Never connect the battery in the opposite direction.

   NOTE: Don't cycle the recirculation control motor for a long time.

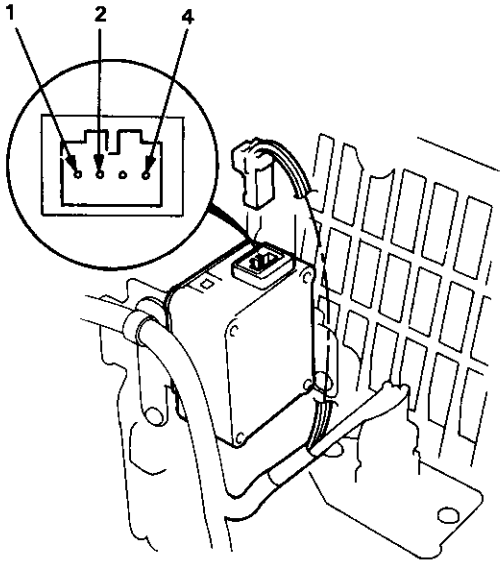

3. If the recirculation control motor does not run in step 1, remove it, and check the recirculation control linkage and door for smooth movement. If the recirculation control linkage and door move smoothly, replace the recirculation control motor.

Replacement

1. Disconnect the 4P connector from the recirculation control motor, and remove the wire harness clip from it.

2. Remove the two screws, recirculation control motor and flange collar.

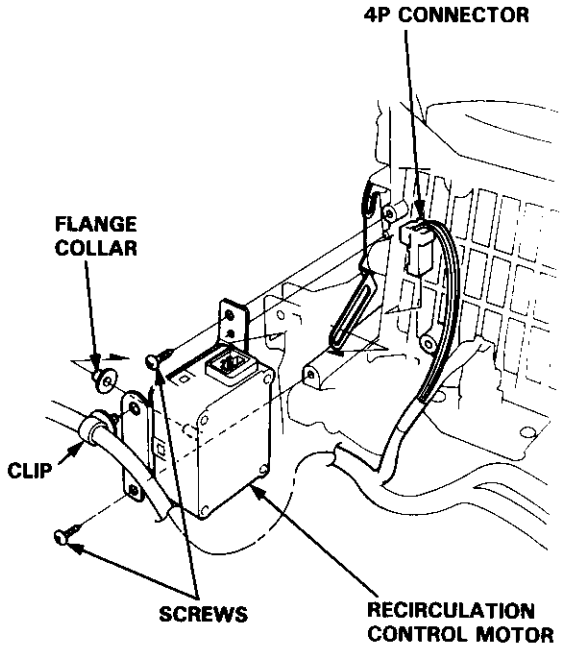

3. Install in the reverse order of removal. After installation, make sure the recirculation control motor runs smoothly.

Relay

Test

There should be continuity between the A and C terminals when power and ground are connected to the B and D terminals.
There should be no continuity when power is disconnected.

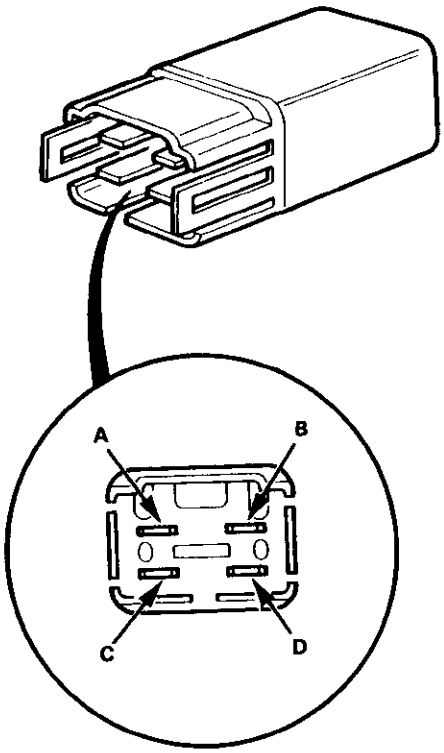

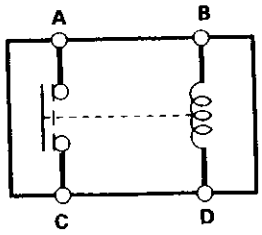

Heater Fan Switch

Test

Check for continuity between the terminals according to the table below.

Position \ Terminal	A	F	D	B	E	C
OFF						
1	○	○	○			
2	○	○		○		
3	○	○			○	
4	○	○				○

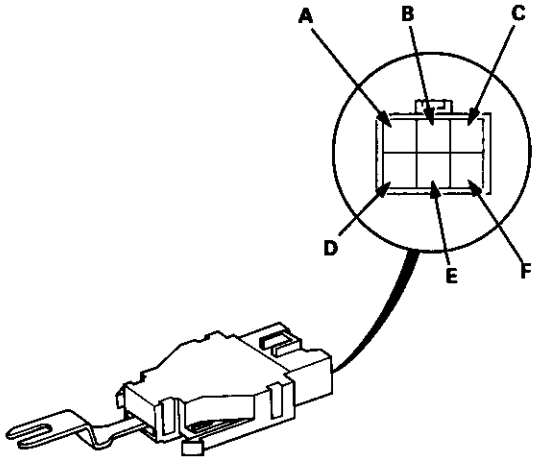

Mode Control Switch

Test

Check for continuity between the terminals according to the table below.

Position \ Terminal	4	1	2	3	7	8
Heat	○	○				
Heat/Def	○		○			
Def	○			○		
Vent	○				○	
Heat/Vent	○					○

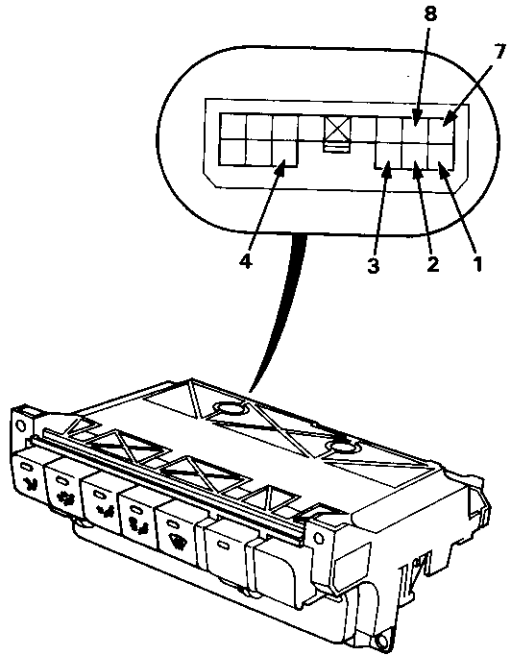

Recirculation Control Switch

Test

Check for continuity between the terminals according to the table below.

Position \ Terminal	4	5	6
Fresh	○		○
Recirculate	○	○	

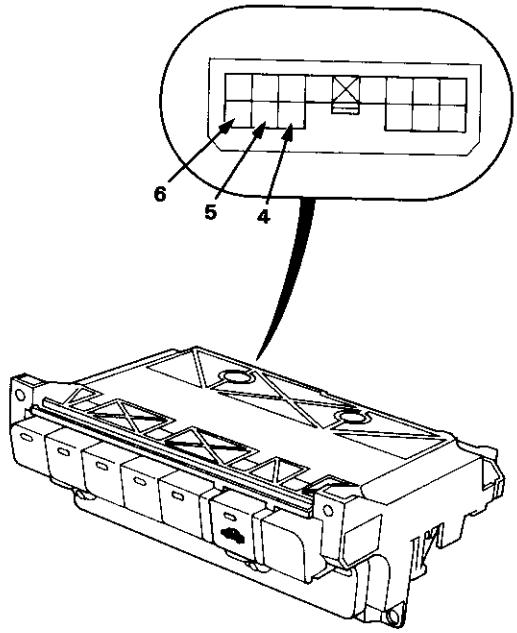

Air Conditioning

Special Tools 22-2
Illustrated Index 22-3
Wiring/Connector Locations 22-4
Circuit Diagram 22-5
Description *22-6*
Troubleshooting
  Reference Chart 22-7
  Flowcharts
    Radiator Fan 22-8
    Condenser Fan 22-10
    Engine Coolant Temperature (ECT) Switch 22-12
    Both Fans 22-13
    Compressor 22-14
    A/C System 22-16
A/C Thermostat
  Test 22-19
Relays
  Test 22-19
Diode
  Test 22-20
A/C Switch
  Test 22-20
A/C Service Tips and Precautions 22-21
A/C System Service
  Recovery 22-22
  Pressure Test Chart 22-23
  Performance Test 22-24
*Evaporator
  Replacement 22-26
  Overhaul 22-27
Compressor
  Description *22-28*
  Illustrated Index 22-29
  Replacement 22-30
  Clutch Inspection 22-32
  Clutch Overhaul 22-33
  Relief Valve Replacement 22-34
A/C Compressor Belt
  Replacement 22-35
  Adjustment 22-36
Condenser
  Replacement 22-37
A/C System Service
  Evacuation 22-38
  Charging 22-39
  Leak Test 22-40

*: Read SRS precautions before working in this area.

Special Tools

Ref. No.	Tool Number	Description	Qty.	Page Reference
①	07LAJ – PT3010A	Test Harness	1	22-15
②	07JGG – 001010A	Belt Tension Gauge	1	22-36

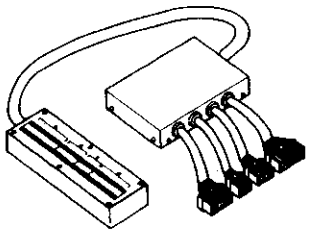

①

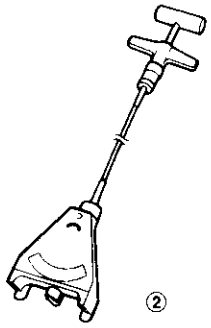

②

CAUTION:

- **All SRS electrical wiring harnesses are covered with yellow insulation.**
- **Before disconnecting any part of the SRS wire harness, connect the short connector(s).**
- **Replace the entire affected SRS harness assembly if *it has an open circuit or damaged wiring.***

NOTE: The original radio has a coded theft protection circuit. Be sure to get the customer's code number before
— disconnecting the battery.
— removing the No. 32 (7.5 A) fuse from the underhood fuse/relay box.
— removing the radio.
After service, reconnect power to the radio and turn it on. When the word "CODE" is displayed, enter the customer's 5-digit code to restore radio operation.

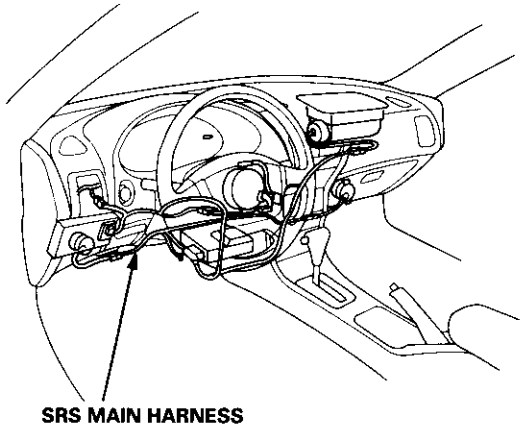

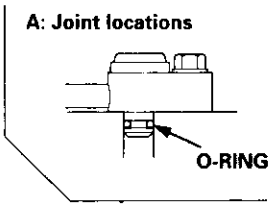

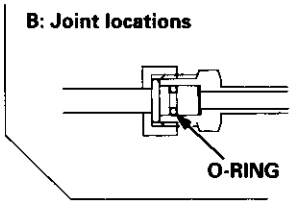

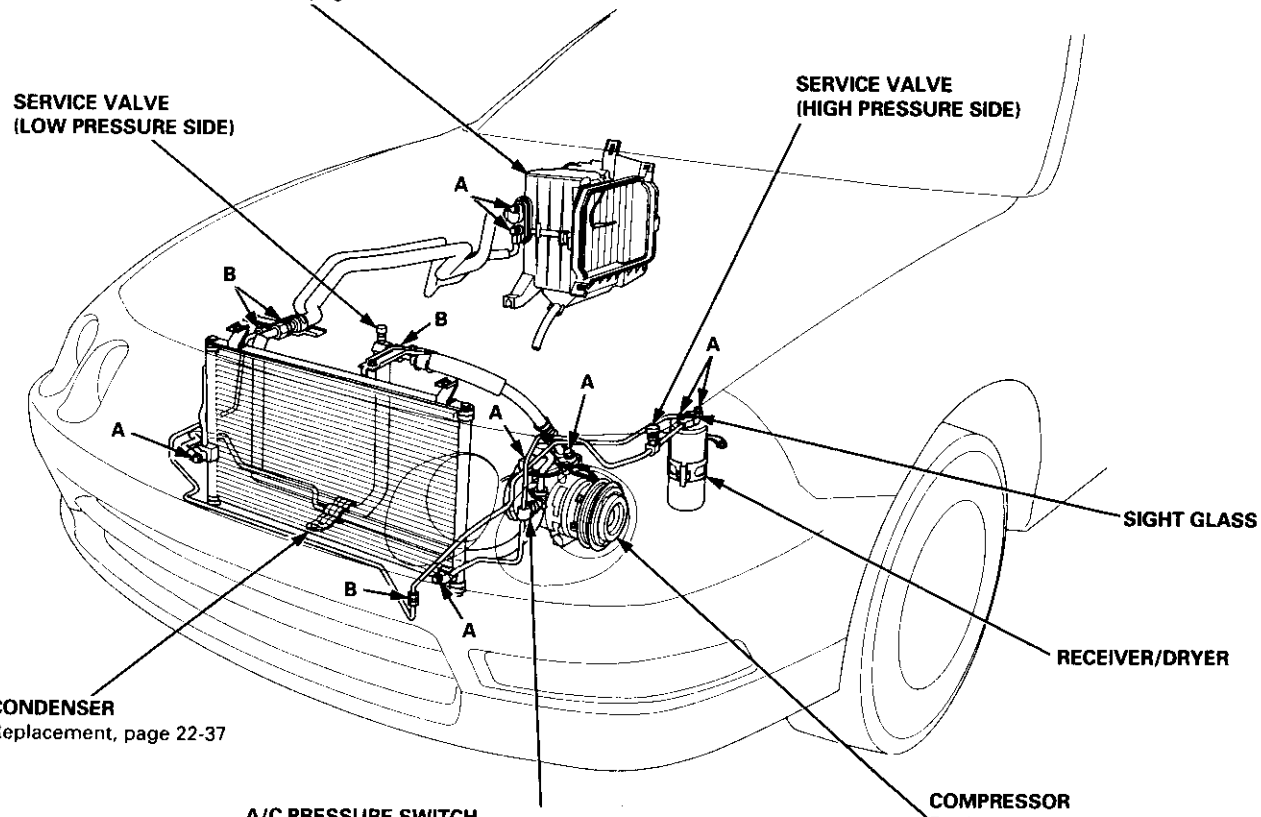

A/C PRESSURE SWITCH
When the refrigerant pressure is below 200 kPa (2.0 kgf/cm², 28 psi) due to refrigerant leakage or above 3100 kPa (32 kgf/cm², 460 psi) due to coolant blockage, the A/C pressure switch opens the circuit to the A/C switch and stops the air conditioning to protect the compressor.

Wiring/Connector Locations

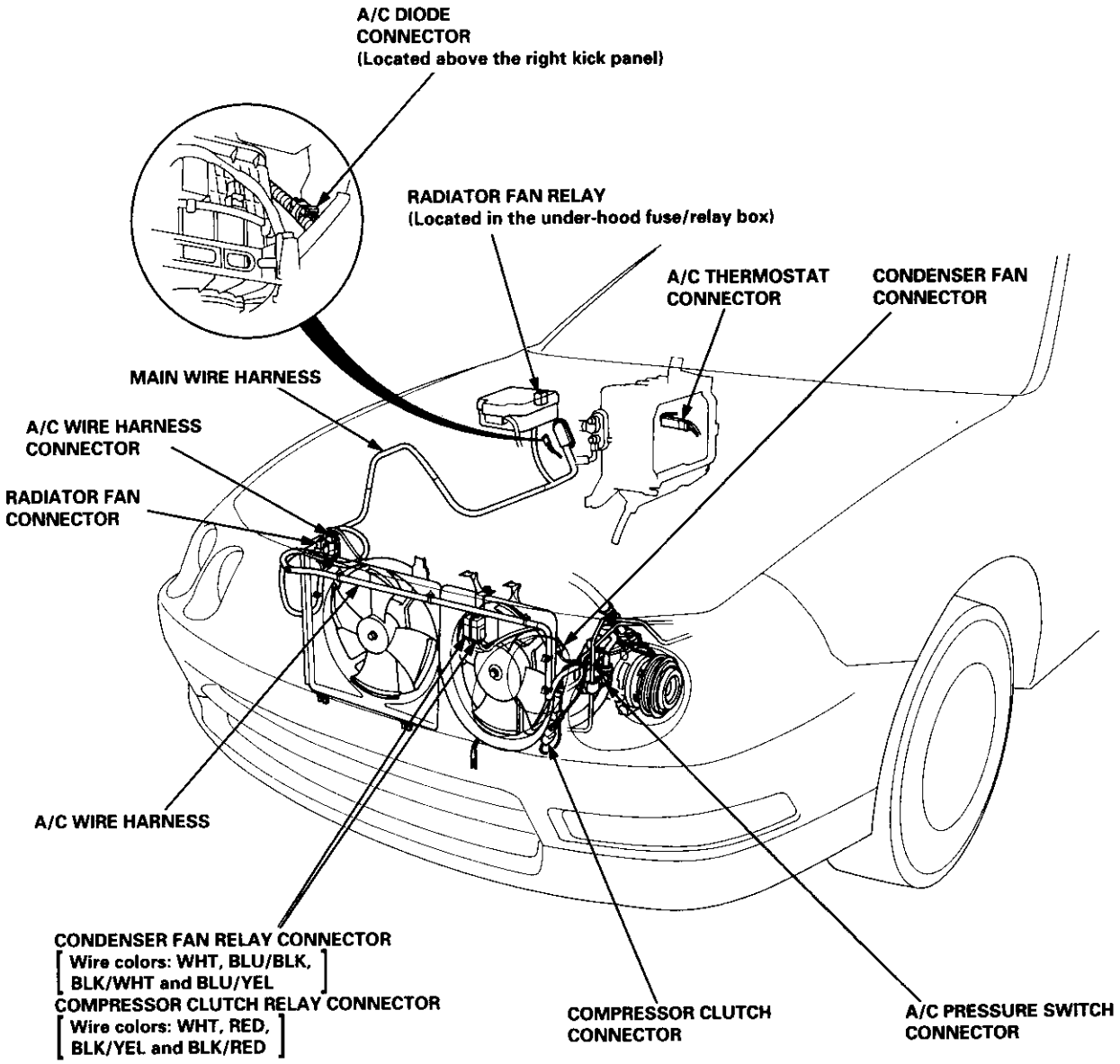

Circuit Diagram

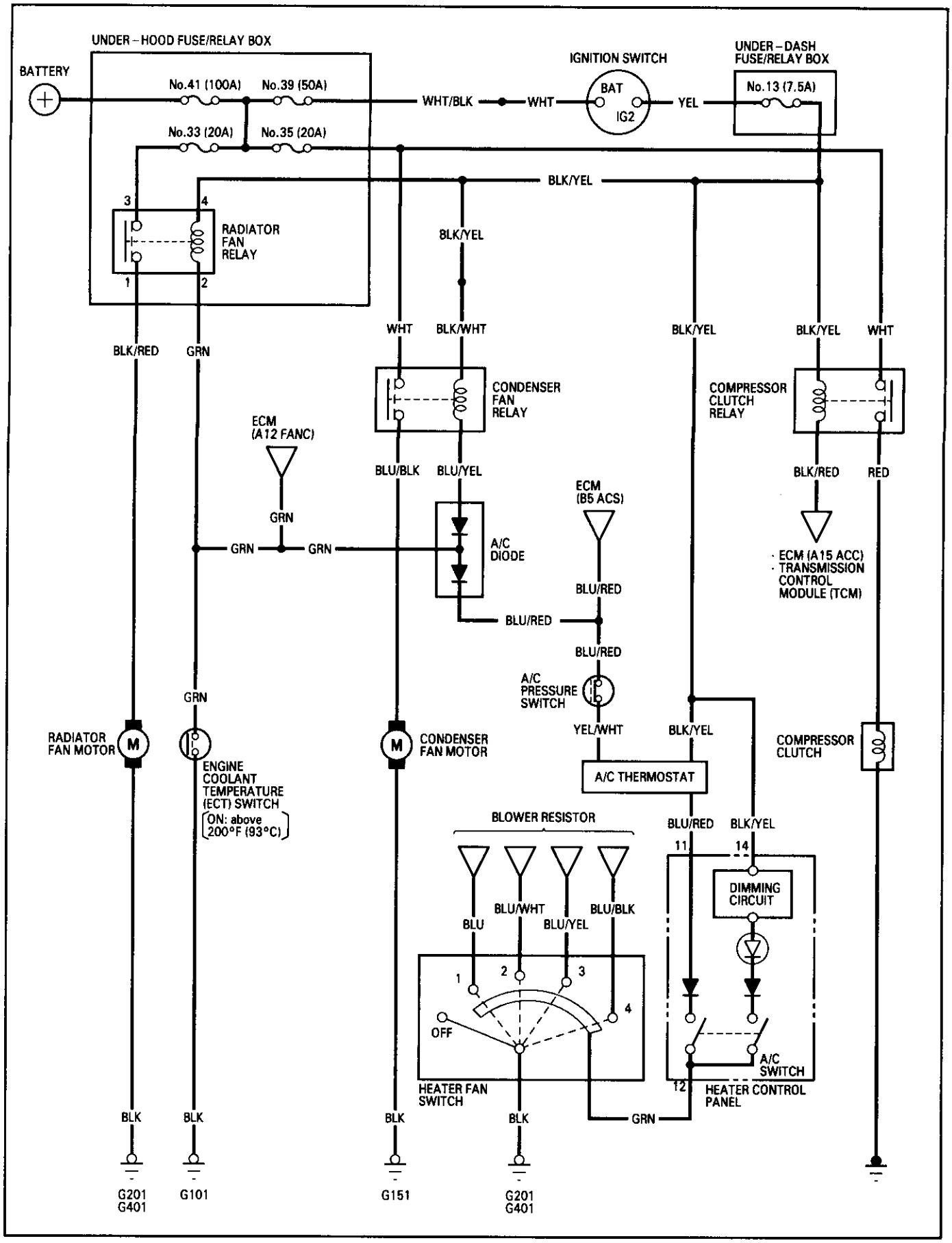

Description

Outline

The air conditioner system delivers cooled air into the passenger compartment by circulating refrigerant through the system as shown below.

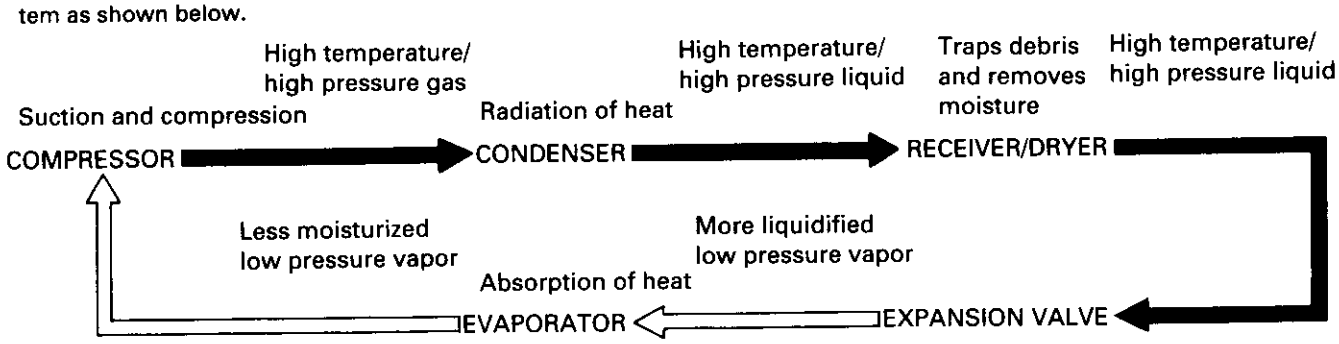

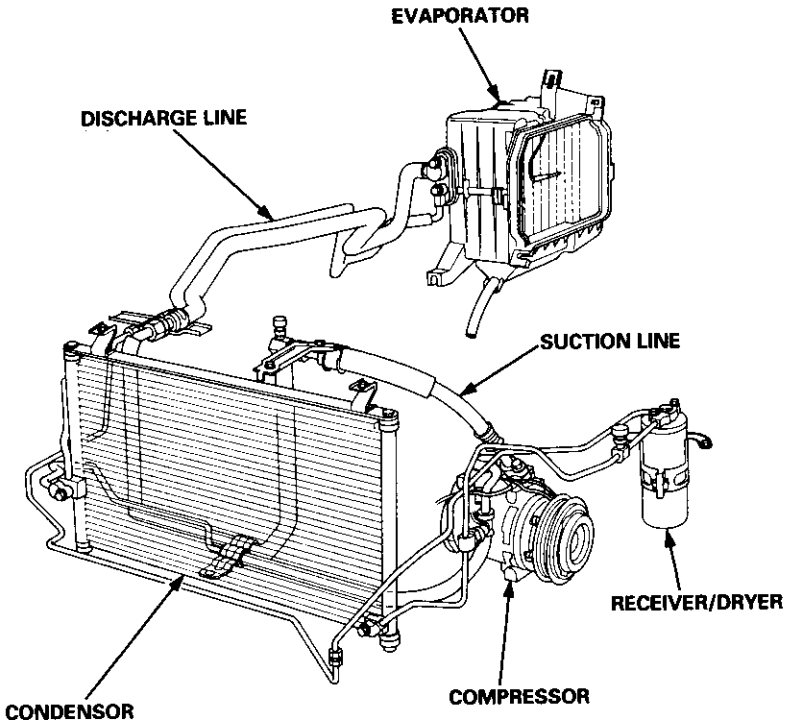

This car uses HFC-134a (R-134a) refrigerant which does not contain chlorofluorocarbons. Pay attention to the following service items:

- Do not mix refrigerants CFC-12 (R-12) and HFC-134a (R-134a). They are not compatible.
- Use only the recommended polyalkyleneglycol (PAG) refrigerant oil (ND-OIL 8: P/N 38899-PR7-A01) designed for the R-134a compressor. Intermixing the recommended (PAG) refrigerant oil with any other refrigerant oil will result in compressor failure.
- All A/C system parts (compressor, discharge line, suction line, evaporator, condenser, receiver/dryer, expansion valve, O-rings for joints) have to be proper for refrigerant R-134a. Do not confuse with R-12 parts.
- Use a halogen gas leak detector designed for refrigerant R-134a.
- R-12 and R-134a refrigerant servicing equipment are not interchangeable. Only use a Recovery/Recycling/Charging System that is U.L.-listed and is certified to meet the requirements of SAE J2210 to service R-134a air conditioning systems.
- Always recover the refrigerant R-134a with an approved Recover/Recycling/Charging System before disconnecting any A/C fitting.

Reference Chart

- Any abnormality must be corrected before continuing the test.
- Because of the precise measurements needed, use a multimeter when testing.

Before performing any troubleshooting procedures check:
- Fuses *1 No. 35 (20 A), *1 No. 33 (20 A), *2 No. 13 (7.5 A)
- Grounds No. G401, G201, G151, G101
- Cleanliness and tightness of all connectors

*1: In the under-hood fuse/relay box
*2: In the under-dash fuse/relay box

SYMPTOM	REMEDY
Radiator fan does not run at all.	Perform the procedures in the flowchart (see page 22-8).
Condenser fan does not run at all.	Perform the procedures in the flowchart (see page 22-10).
Both fans (radiator and condenser) do not run for engine cooling, but they both run with the A/C on.	Perform the procedures in the flowchart (see page 22-12).
Both fans do not run at all.	Perform the procedures in the flowchart (see page 22-13).
Compressor clutch does not engage.	Perform the procedures in the flowchart (see page 22-14).
A/C system does not come on (compressor and both fans).	Perform the procedures in the flowchart (see page 22-16).

Radiator Fan

Radiator fan does not run at all.

Check the No. 33 (20 A) fuse in the under-hood fuse/relay box.

Is the fuse OK?
- NO → **Replace the fuse.**
- YES ↓

Remove the radiator fan relay from the under-hood fuse/relay box and test it (see page 22-19).

Is the relay OK?
- NO → **Replace the radiator fan relay.**
- YES ↓

Measure the voltage between the No. 3 terminal (+) and body ground (–).

Is there battery voltage?
- NO → **Replace the under-hood fuse/relay box.**
- YES ↓

Connect the No. 1 and No. 3 terminals with a jumper wire.

Does the radiator fan run?
- YES → To page 22-9
- NO ↓

Disconnect the jumper wire.

Disconnect the radiator fan 2P connector.

Check for continuity in the BLK/RED wire between the No. 1 terminal and the radiator fan.

Is there continuity?
- NO → **Repair open in the BLK/RED wire between the under-hood fuse/relay box and the radiator fan.**
- YES ↓

Check for continuity in the BLK wire between the radiator fan and body ground.

Is there continuity?
- NO → **Check for an open in the BLK wire between the radiator fan and body ground. If the wire is OK, check for poor ground at G201 and G401.**
- YES ↓

Replace the radiator fan motor.

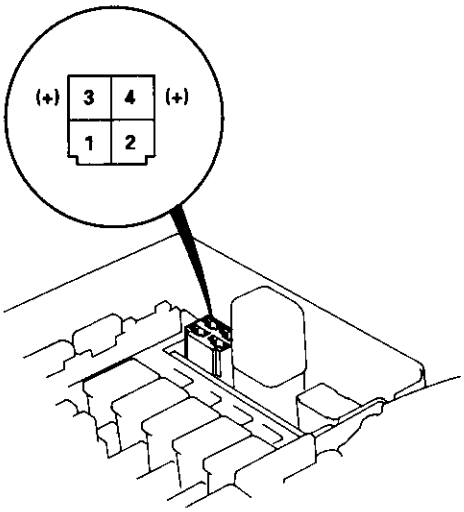

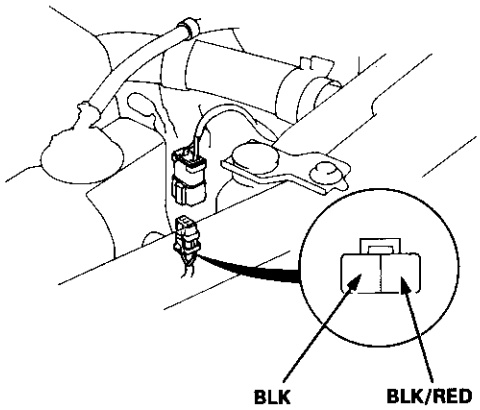

View from wire side

From page 22-8

Disconnect the jumper wire and turn the ignition switch ON (II).

Measure the voltage between the No. 4 terminal (+) and body ground (–).

Is there battery voltage?

YES → **Repair open in the GRN wire between the under-hood fuse/relay box and the A/C diode.**

NO → **Repair open in the BLK/YEL wire between the under-hood fuse/relay box and the under-dash fuse/relay box.**

Condenser Fan

Condenser fan does not run at all.

Remove the condenser fan relay and test it (see page 22-19).

Is the relay OK?
- NO → **Replace the condenser fan relay.**
- YES ↓

Measure the voltage between the WHT wire terminal (+) and body ground (–).

Is there battery voltage?
- NO → **Repair open in the WHT wire between the under-hood fuse/relay box and the condenser fan relay.**
- YES ↓

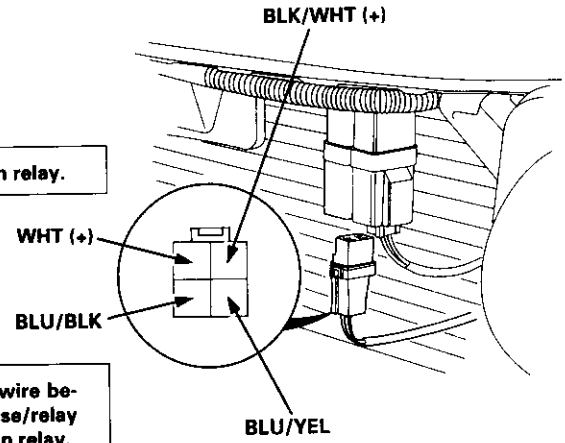

View from wire side

Connect the WHT and BLU/BLK wire terminals with a jumper wire.

Does the condenser fan run?
- YES → To page 22-11
- NO ↓

Disconnect the jumper wire.

Disconnect the condenser fan 2P connector.

Check for continuity in the BLU/BLK wire between the condenser fan relay and the condenser fan.

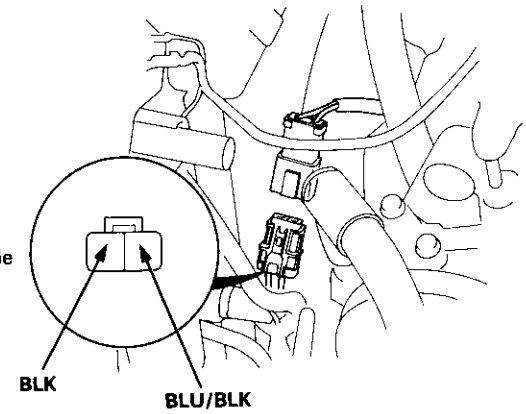

Is there continuity?
- NO → **Repair open in the BLU/BLK wire between the condenser fan relay and the condenser fan.**
- YES ↓

Check for continuity in the BLK wire between the condenser fan and body ground.

Is there continuity?
- NO → **Check for an open in the BLK wire between the condenser fan and body ground. If the wire is OK, check for poor ground at G151.**
- YES ↓

Replace the condenser fan motor.

From page 22-10

Disconnect the jumper wire and turn the ignition switch ON (II).

Measure the voltage between the BLK/WHT wire terminal (+) and body ground (–).

Is there battery voltage?

NO → **Repair open in the BLK/WHT or BLK/YEL wire between the condenser fan relay and the under-dash fuse/relay box.**

YES

Remove the A/C diode from the A/C diode 3P connector.

Test the A/C diode (see page 22-20).

Is the A/C diode OK?

NO → **Replace the A/C diode.**

YES

Repair open in the BLU/YEL wire between the condenser fan relay and the A/C diode.

Engine Coolant Temperature (ECT) Switch

Both fans (radiator and condenser) do not run for engine cooling, but they both run with the A/C on.

Disconnect the engine coolant temperature (ECT) switch 2P connector.

Turn the ignition switch ON (II).

Measure the voltage between the GRN wire terminal (+) and body ground (–).

Is there battery voltage?

- NO → **Repair open in the GRN wire between the ECT switch and the under-hood fuse/relay box.**
- YES ↓

Turn the ignition switch OFF and check for continuity in the BLK wire between the ECT switch and body ground.

Is there continuity?

- NO → **Check for an open in the BLK wire between the ECT switch and body ground. If the wire is OK, check for poor ground at G101.**
- YES ↓

Check the temperature gauge.

Does it read above normal?

- NO → **Repair the cooling system.**
- YES ↓

Replace the ECT switch.

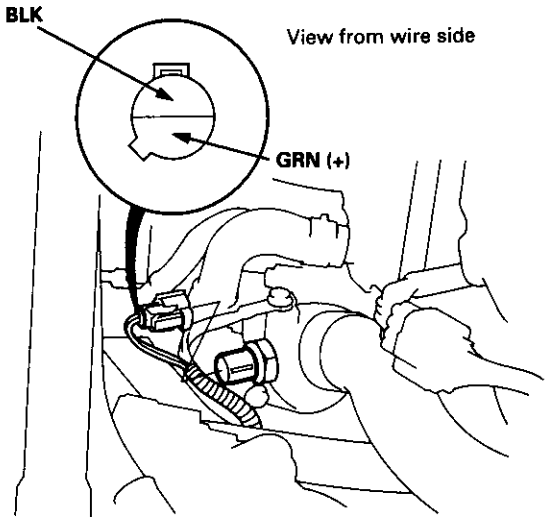

Both Fans

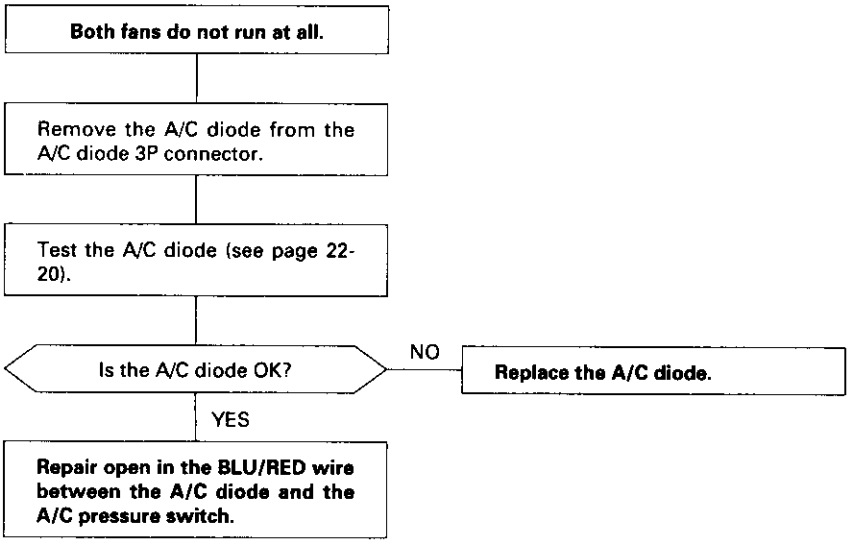
Both fans do not run at all.
Remove the A/C diode from the A/C diode 3P connector.
Test the A/C diode (see page 22-20).
Is the A/C diode OK?
NO
Replace the A/C diode.
YES
Repair open in the BLU/RED wire between the A/C diode and the A/C pressure switch.

Compressor

Compressor clutch does not engage.

Remove the compressor clutch relay and test it (see page 22-19).

Is the relay OK?

- NO → **Replace the compressor clutch relay.**
- YES ↓

Measure the voltage between the WHT wire terminal (+) and body ground (–).

Is there battery voltage?

- NO → **Repair open in the WHT wire between the under-hood fuse/relay box and the compressor clutch relay.**
- YES ↓

Connect the WHT and RED wire terminals with a jumper wire.

Does the compressor clutch click?

- NO → Disconnect the jumper wire. → Disconnect the compressor clutch 1P connector. → Check for continuity in the RED wire between the compressor clutch relay and the compressor clutch.
  - Is there continuity?
    - NO → **Repair open in the RED wire between the compressor clutch relay and the compressor clutch.**
    - YES → **Inspect the compressor clutch clearance and the compressor clutch field coil (see page 22-32).**
- YES ↓

Disconnect the jumper wire.

To page 22-15

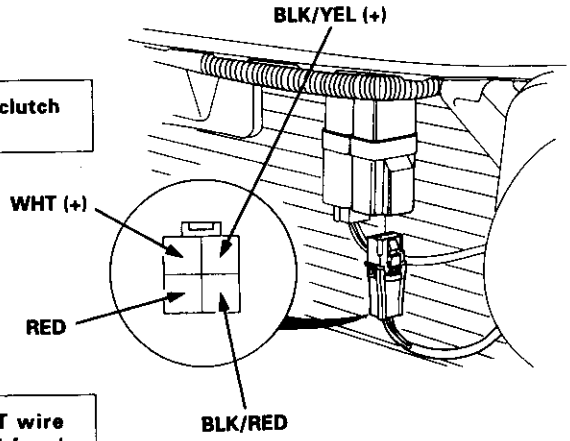

View from wire side

View from wire side

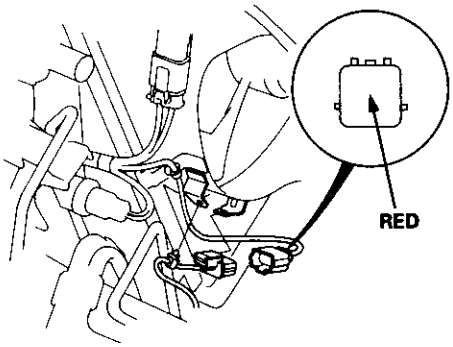

From page 22-14

Turn the ignition switch ON (II).

Measure the voltage between the BLK/YEL wire terminal (+) and body ground (–).

Is there battery voltage?

NO → **Repair open in the BLK/YEL wire between the under-dash fuse/relay box and the compressor clutch relay.**

YES

Turn the ignition switch OFF and install the compressor clutch relay.

Connect the test harness "A" and "B" connectors to the main wire harness only, not to the ECM (see section 11).

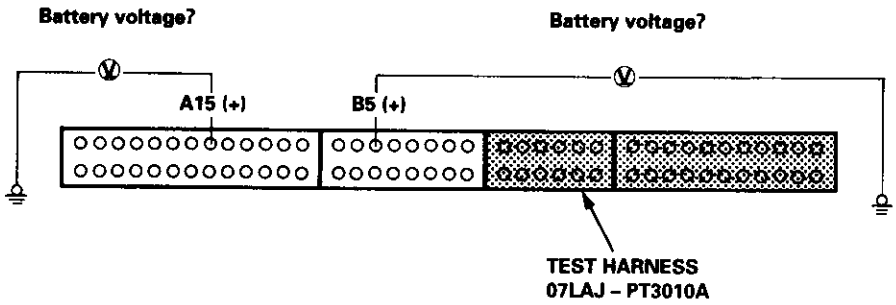

Turn the ignition switch ON (II).

Measure the voltage between the A15 terminal (+) and body ground (–).

Is there battery voltage?

NO → **Repair open in the BLK/RED wire between the compressor clutch relay and the ECM.**

YES

Make sure the A/C and heater fan switches are OFF.

Measure the voltage between the B5 terminal (+) and body ground (–).

Is there battery voltage?

NO → **Repair open in the BLU/RED wire between the A/C diode and the ECM.**

YES

Substitute a known-good ECM and recheck. If symptom/indication goes away, replace the original ECM.

A/C System

A/C system does not come on (compressor and both fans).

Disconnect the A/C pressure switch 2P connector.

Turn the ignition switch ON (II).

Measure the voltage between the BLU/RED wire terminal (+) and body ground (–).

Is there battery voltage?

NO → **Repair open in the BLU/RED wire between the A/C pressure switch and the A/C diode.**

YES

Turn the ignition switch OFF.

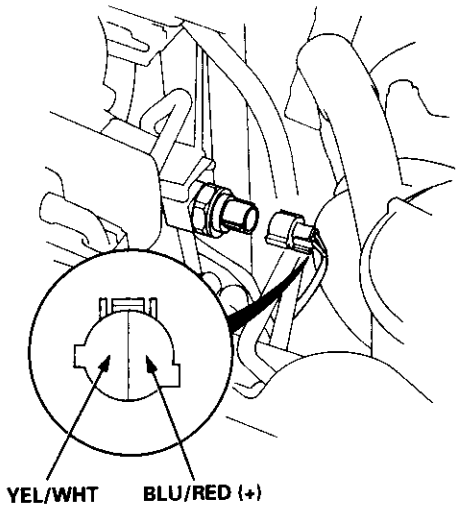

Check for continuity between the No. 1 and No. 2 terminals of the A/C pressure switch.

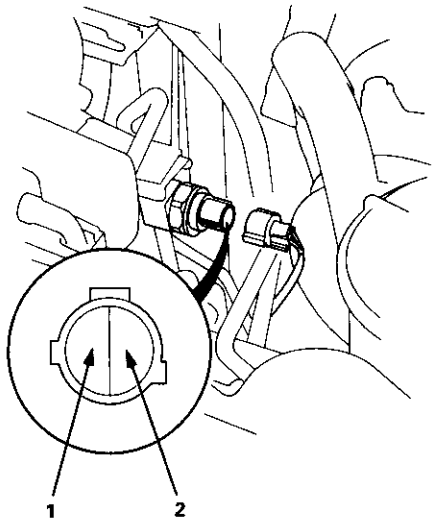

Is there continuity?

NO → Check for A/C system pressure.

Is the pressure within specifications?

NO → **Repair the A/C pressure problem.**

YES → **Replace the A/C pressure switch.**

YES

Reconnect the A/C pressure switch 2P connector.

To page 22-17

From page 22-16

Disconnect the A/C thermostat 3P connector.

Turn the ignition switch ON (II).

Measure the voltage between the BLK/YEL wire terminal (+) and body ground (–).

Is there battery voltage?

NO → **Repair open in the BLK/YEL wire between the under-dash fuse/relay box and the A/C thermostat.**

YES

Measure the voltage between the YEL/WHT wire terminal (+) and body ground (–).

Is there battery voltage?

NO → **Repair open in the YEL/WHT wire between the A/C pressure switch and the A/C thermostat.**

YES

Turn the ignition switch OFF.

Reconnect the A/C thermostat 3P connector and connect the BLU/RED wire terminal to ground with a jumper wire.

Start the engine.

Do the radiator and condenser fans run and the compressor clutch engage?

NO → **Replace the A/C thermostat.**

YES

Turn the ignition switch OFF and disconnect the jumper wire.

To page 22-18

View from wire side

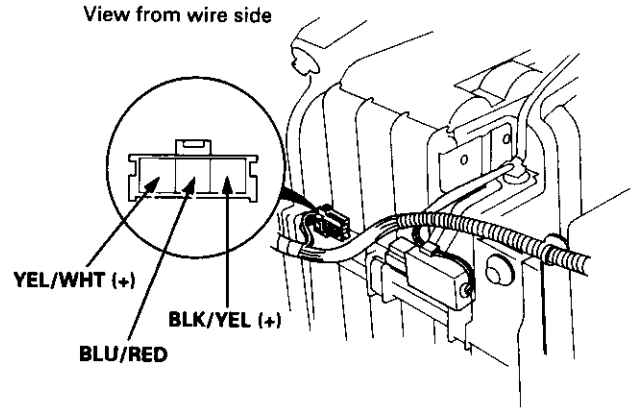

View from wire side

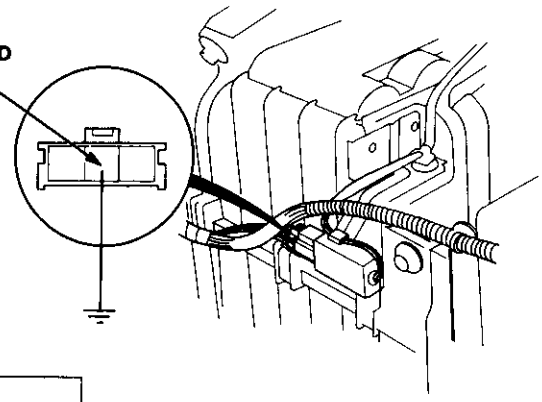

(cont'd)

A/C System (cont'd)

From page 22-17

Remove the heater control panel (see page 21-25).

Disconnect the heater control panel 14P connector.

Turn the ignition switch ON (II).

Measure the voltage between the BLU/RED wire terminal (+) and body ground (–).

Is there battery voltage?

- NO → **Repair open in the BLU/RED wire between the A/C thermostat and the heater control panel.**
- YES ↓

Turn the ignition switch OFF.

Test the A/C switch (see page 22-20).

Is the A/C switch OK?

- NO → **Replace the heater control panel (A/C switch).**
- YES ↓

Disconnect the heater fan switch 6P connector.

Check for continuity in the GRN wire between the heater control panel and the heater fan switch.

Is there continuity?

- NO → **Repair open in the GRN wire between the heater control panel and the heater fan switch.**
- YES ↓

Check for continuity in the BLK wire between the heater fan switch and body ground.

Is there continuity?

- NO → **Check for an open in the BLK wire between the heater fan switch and body ground. If the wire is OK, check for poor ground at G401 and G402.**
- YES ↓

Replace the heater fan switch.

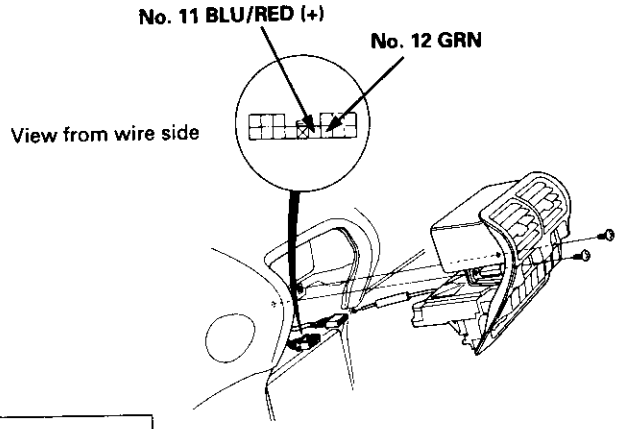

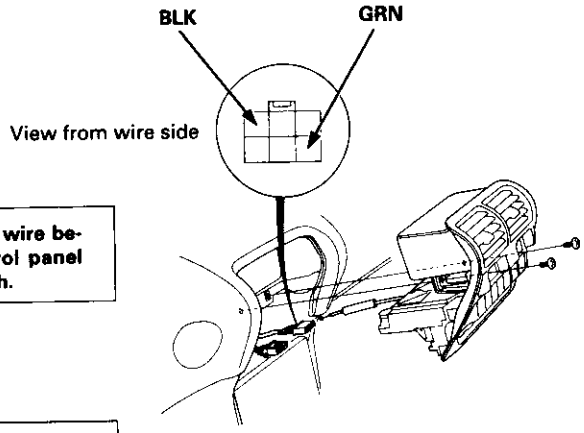

A/C Thermostat

Test

Connect battery power to terminal C and ground terminal B, and connect a test light between terminals A and C.

NOTE: Use a 12 V, 3 W – 18 W test light.

Dip the A/C thermostat into a cup filled with ice water, and check the test light.

The light should go off at 37°F (3°C) or less, and should come on at 39°F (4°C) or more.

If the light doesn't come on and go off as specified, replace the A/C thermostat.

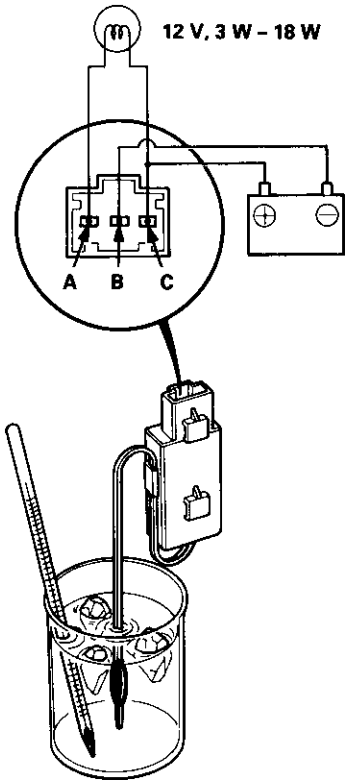

Relays

Test

There should be continuity between the A and C terminals when power and ground are connected to the B and D terminals.
There should be no continuity when power is disconnected.

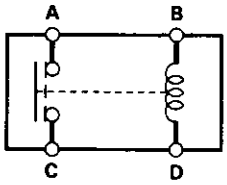

- Radiator fan relay

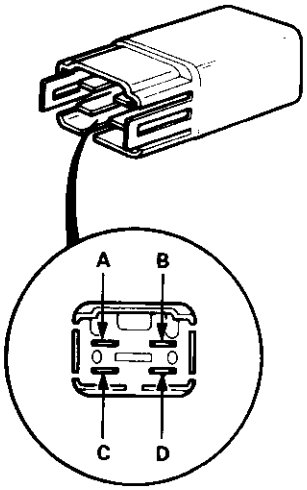

- Condenser fan relay
- Compressor clutch relay

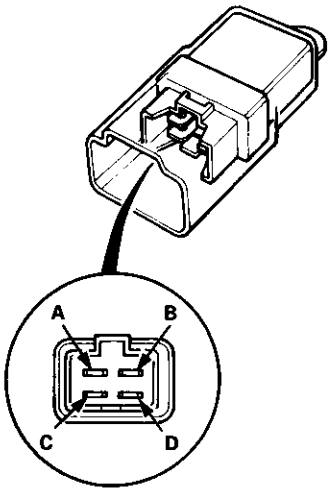

Diode

Test

NOTE: The diode is designed to pass current in one direction while blocking it in the opposite direction. Use an analog ohmmeter, or a digital ohmmeter equipped with a diode tester.

Check for current flow in both directions between the A and B, and B and C terminals. There should be current flow in only one direction.

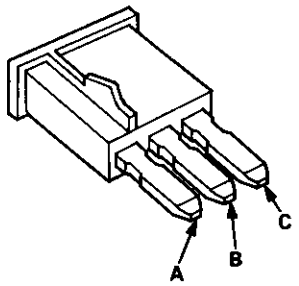

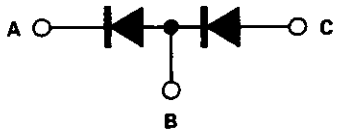

A/C Switch

Test

NOTE: The A/C switch contains a diode. Use an analog ohmmeter, or a digital ohmmeter equipped with a diode tester.

Check for current flow in both directions between terminals 11 and 12. There should be current flow in only one direction.

Position \ Terminal	11	12
ON	○—▶|—○	
OFF		

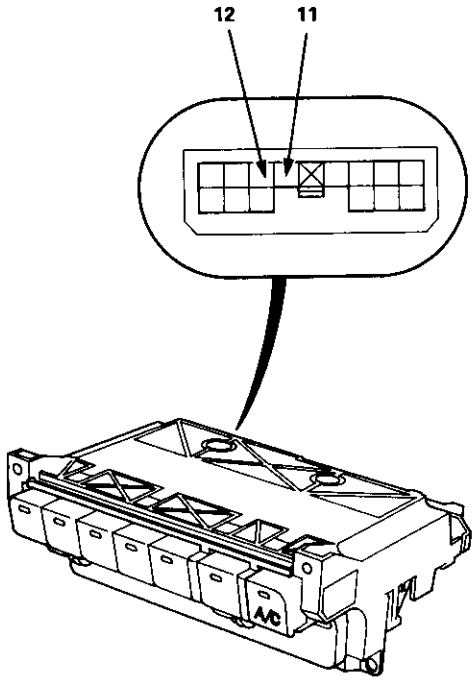

A/C Service Tips and Precautions

The air conditioner system uses HFC-134a (R-134a) refrigerant and polyalkyleneglycol (PAG) refrigerant oil (ND-OIL 8: P/N 38899 – PR7 – A01), which are not compatible with CFC-12 (R-12) refrigerant and mineral oil. Do not use R-12 refrigerant or mineral oil in this system, and do not attempt to use R-12 servicing equipment; damage to the air conditioner system or your servicing equipment will result.

Only use service equipment that is U.L.-listed and is certified to meet the requirements of SAE J2210 to remove R-134a from the air conditioner system.

CAUTION: Exposure to air conditioner refrigerant and lubricant vapor or mist can irritate eyes, nose and throat. Avoid breathing the air conditioner refrigerant and lubricant vapor or mist.

If accidental system discharge occurs, ventilate work area before resuming service.

R-134a service equipment or vehicle air conditioner systems should not be pressure tested or leak tested with compressed air.

⚠ WARNING Some mixtures of air and R-134a have been shown to be combustible at elevated pressures and can result in fire or explosion causing injury or property damage. Never use compressed air to pressure test R-134a service equipment or vehicle air conditioner systems.

Additional health and safety information may be obtained from the refrigerant and lubricant manufacturers.

1. Always disconnect the negative cable from the battery whenever replacing air conditioning parts.
2. Keep moisture and dust out of the system. When disconnecting any lines, plug or cap the fittings immediately; don't remove the caps or plugs until just before you reconnect each line.
3. Before connecting any hose or line, apply a few drops of refrigerant oil (ND-OIL 8: P/N 38899 – PR7 – A01) to the O-ring.
4. When tightening or loosening a fitting, use a second wrench to support the matching fitting.
5. When recovering the system, use a R-134a refrigerant Recovery/Recycling/Charging System; don't release refrigerant into the atmosphere.
6. Add refrigerant oil (ND-OIL 8: P/N 38899 – PR7 – A01) after replacing the following parts:
   NOTE:
   - To avoid contamination, do not return the oil to the container once dispensed, and never mix it with other refrigerant oils.
   - Immediately after using the oil, replace the cap on the container and seal it to avoid moisture absorption.
   - Do not spill the refrigerant oil on the car; it may damage the paint; if the refrigerant oil contacts the paint, wash it off immediately.

   Condenser ..... 25 mℓ (5/6 fl·oz, 0.9 Imp·oz)
   Evaporator ..... 40 mℓ (1 1/3 fl·oz, 1.4 Imp·oz)
   Line or hose ..... 10 mℓ (1/3 fl·oz, 0.4 Imp·oz)
   Receiver/Dryer ..... 10 mℓ (1/3 fl·oz, 0.4 Imp·oz)
   Leakage repair ..... 25 mℓ (5/6 fl·oz, 0.9 Imp·oz)
   Compressor ..... For compressor replacement, subtract the volume of oil drained from the removed compressor from 140 mℓ (4 2/3 fl·oz, 4.9 imp·oz), and drain the calculated volume of oil from the new compressor: 140 mℓ (4 2/3 fl·oz, 4.9 imp·oz)– Volume of removed compressor = Volume to drain from new compressor.
   NOTE: Even if no oil is drained from the removed compressor, don't drain more than 50 mℓ (1 2/3 fl·oz, 1.8 Imp ·oz) from the new compressor.

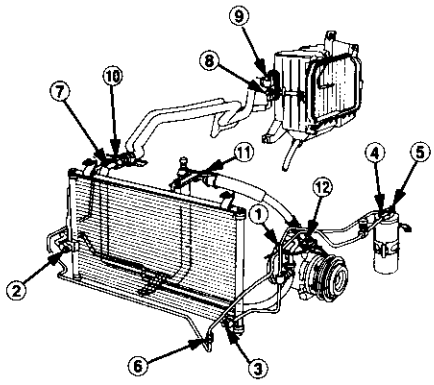

① Discharge hose to the compressor (6 x 1.0 mm) ..... 9.8 N·m (1.0 kgf·m, 7.2 lbf·ft)
② Discharge hose to the condenser (6 x 1.0 mm) ..... 9.8 N·m (1.0 kgf·m, 7.2 lbf·ft)
③ Condenser pipe to the condenser (6 x 1.0 mm) ..... 9.8 N·m (1.0 kgf·m, 7.2 lbf·ft)
④ Condenser pipe to the receiver/dryer (6 x 1.0 mm) ..... 9.8 N·m (1.0 kgf·m, 7.2 lbf·ft)
⑤ Receiver pipe A to the receiver/dryer (6 x 1.0 mm) ..... 9.8 N·m (1.0 kgf·m, 7.2 lbf·ft)
⑥ Receiver pipe A to the receiver pipe B ..... 13 N·m (1.3 kgf·m, 9.4 lbf·ft)
⑦ Receiver pipe B to the receiver pipe C ..... 13 N·m (1.3 kgf·m, 9.4 lbf·ft)
⑧ Receiver pipe C to the evaporator (6 x 1.0 mm) ..... 9.8 N·m (1.0 kgf·m, 7.2 lbf·ft)
⑨ Suction pipe B to the evaporator (6 x 1.0 mm) ..... 9.8 N·m (1.0 kgf·m, 7.2 lbf·ft)
⑩ Suction pipe A to the suction pipe B ..... 31 N·m (3.2 kgf·m, 23 lbf·ft)
⑪ Suction hose to the suction pipe A ..... 31 N·m (3.2 kgf·m, 23 lbf·ft)
⑫ Suction hose to the compressor (6 x 1.0 mm) ..... 9.8 N·m (1.0 kgf·m, 7.2 lbf·ft)

Recovery

Only use service equipment that is U.L.-listed and is certified to meet the requirements of SAE J2210 to remove HFC-134a (R-134a) from the air conditioner system.

CAUTION: Exposure to air conditioner refrigerant and lubricant vapor or mist can irritate eyes, nose and throat. Avoid breathing the air conditioner refrigerant and lubricant vapor or mist.

If accidental system discharge occurs, ventilate work area before resuming service.

R-134a service equipment or vehicle air conditioner systems should not be pressure tested or leak tested with compressed air.

⚠ WARNING Some mixtures of air and R-134a have been shown to be combustible at elevated pressures and can result in fire or explosion causing injury or property damage. Never use compressed air to pressure test R-134a service equipment or vehicle air conditioner systems.

Additional health and safety information may be obtained from the refrigerant and lubricant manufactures.

1. Connect a R-134a refrigerant Recovery/Recycling/Charging System to the car, as shown, following the equipment manufacturer's instructions.

2. Measure the amount of refrigerant oil removed from the A/C system after the recovery process is completed.

   NOTE: Be sure to install the same amount of new refrigerant oil back into the A/C system before charging.

Recovery/Recycling/Charging System.

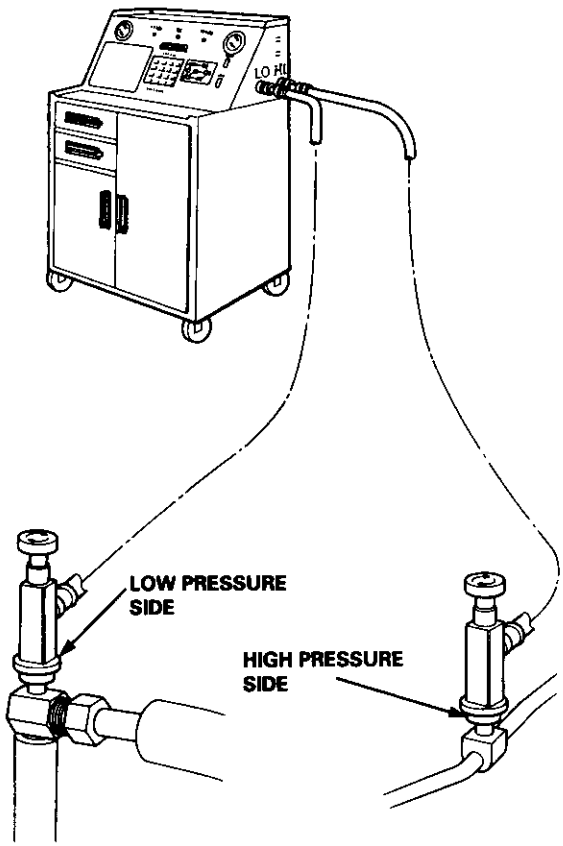

Pressure Test Chart

NOTE: Performance Test on page 22-24.

TEST RESULTS	RELATED SYMPTOMS	PROBABLE CAUSE	REMEDY
Discharge (high) pressure abnormally high	After stopping compressor, pressure drops to about 200 kPa (2.0 kgf/cm², 28 psi) quickly, and then falls gradually.	Air in system	Recover, evacuate and recharge with specified amount. Evacuation: see page 22-38 Charging: see page 22-39
	No bubbles in sight glass when condenser is cooled by water.	Excessive refrigerant in system	Recover, evacuate and recharge with specified amount.
	Reduced or no air flow through condenser.	• Clogged condenser or radiator fins • Condenser or radiator fan not working properly	• Clean • Check voltage and fan rpm • Check fan direction
	Line to condenser is excessively hot.	Restricted flow of refrigerant in system	• Restricted lines
Discharge pressure abnormally low	Excessive bubbles in sight glass; condenser is not hot.	Insufficient refrigerant in system	• Check for leak • Charge system
	High and low pressures are balanced soon after stopping compressor. Low side is higher than normal.	• Faulty compressor discharge valve • Faulty compressor seal	Replace the compressor.
	Outlet of expansion valve is not frosted, low pressure gauge indicates vacuum.	• Faulty expansion valve • Moisture in system	• Replace • Recover, evacuate and recharge with specified amount.
Suction (low) pressure abnormally low	Excessive bubbles in sight glass; condenser is not hot.	Insufficient refrigerant	Repair the leaks. Recover, evacuate and recharge with specified amount. Charge as required.
	Expansion valve is not frosted and low pressure line is not cold. Low pressure gauge indicates vacuum.	• Frozen expansion valve • Faulty expansion valve	Replace the expansion valve.
	Discharge temperature is low and the air flow from vents is restricted.	Frozen evaporator	Run the fan with compressor off then check A/C thermostat.
	Expansion valve is frosted.	Clogged expansion valve	Clean or replace.
	Receiver/dryer outlet is cool and inlet is warm (should be warm during operation).	Clogged receiver/dryer	Replace
Suction pressure abnormally high	Low pressure hose and check joint are cooler than the temperature around evaporator.	• Expansion valve open too long • Loose expansion capillary tube	Repair or replace.
	Suction pressure is lowered when condenser is cooled by water.	Excessive refrigerant in system	Recover, evacuate and recharge with specified amount.
	High and low pressure are equalized as soon as the compressor is stopped, and both gauges fluctuate while running.	• Faulty gasket • Faulty high pressure valve • Foreign particle stuck in high pressure valve	Replace the compressor.
Suction and discharge pressures abnormally high	Reduced air flow through condenser.	• Clogged condenser or radiator fins • Condenser or radiator fan not working properly.	• Clean condenser and radiator • Check voltage and fan rpm • Check fan direction
	No bubbles in sight glass when condenser is cooled by water.	Excessive refrigerant in system	Recover, evacuate and recharge with specified amount.
Suction and discharge pressure abnormally low	Low pressure hose and metal end areas are cooler than evaporator.	Clogged or kinked low pressure hose parts	Repair or replace.
	Temperature around expansion valve is too low compared with that around receiver/dryer.	Clogged high pressure line	Repair or replace.
Refrigerant leaks	Compressor clutch is dirty.	Compressor shaft seal leaking	Replace the compressor.
	Compressor bolt(s) are dirty.	Leaking around bolt(s)	Tighten bolt(s) or replace compressor.
	Compressor gasket is wet with oil.	Gasket leaking	Replace the compressor.

Performance Test

The performance test will help determine if the air conditioner system is operating within specifications.

Only use service equipment that is U.L.-listed and is certified to meet the requirements of SAE J2210 to remove HFC-134a (R-134a) from the air conditioner system.

CAUTION: Exposure to air conditioner refrigerant and lubricant vapor or mist can irritate eyes, nose and throat. Avoid breathing the air conditioner refrigerant and lubricant vapor or mist.

If accidental system discharge occurs, ventilate work area before resuming service.

R-134a service equipment or vehicle air conditioner systems should not be pressure tested or leak tested with compressed air.

WARNING Some mixtures of air and R-134a have been shown to be combustible at elevated pressures and can result in fire or explosion causing injury or property damage. Never use compressed air to pressure test R-134a service equipment or vehicle air conditioner systems.

Additional health and safety information may be obtained from the refrigerant and lubricant manufacturers.

1. Connect a R-134a refrigerant Recovery/Recycling/Charging System to the car, as shown, following the equipment manufacturer's instructions.

2. Insert a thermometer in the center vent outlet. Determine the relative humidity and air temperature by calling the local weather information line.

3. Test conditions:
   - Avoid direct sunlight.
   - Open hood.
   - Open front doors.
   - Set the temperature control lever to MAX COOL, the mode control switch on VENT and the recirculation control switch on RECIRCULATE.
   - Slide the heater fan switch on MAX.
   - Run the engine at 1,500 rpm.
   - No driver or passengers in vehicle.

4. After running the air conditioning for 10 minutes under the above test conditions, read the delivery temperature from the thermometer in the dash vent and the high and low system pressure from the A/C gauges.

Recovery/Recycling/Charging System.

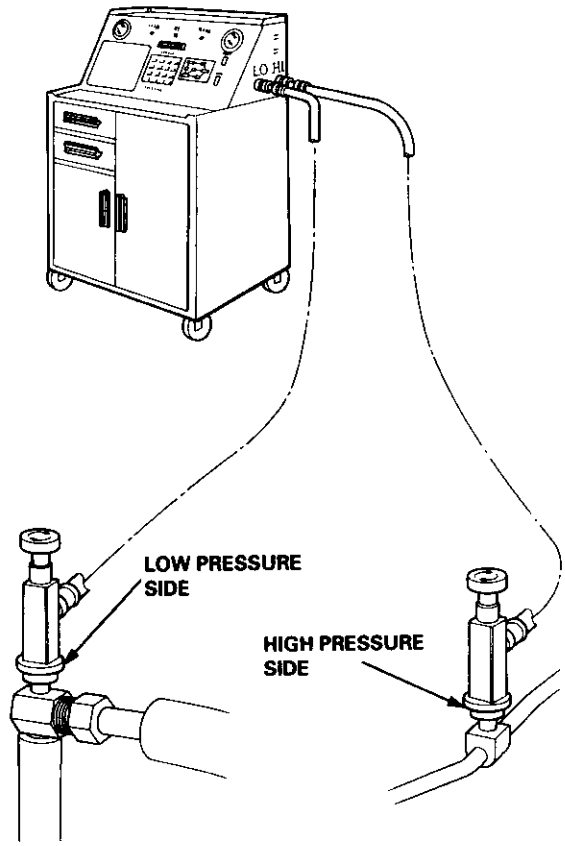

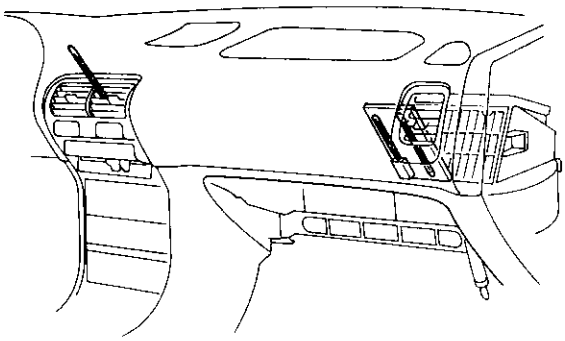

5. To complete the charts:
   - Mark the delivery temperature along the vertical line.
   - Mark the intake temperature (ambient air temperature) along the bottom line.
   - Draw a line straight up from the air temperature to the humidity.
   - Mark a point one line above and one line below the humidity level (10 % above and 10 % below the humidity level).
   - From each point, draw a horizontal line across the delivery temperature.
   - The delivery temperature should fall between the two lines.
   - Complete the low side pressure test and high side pressure test in the same way.
   - Any measurements outside the line may indicate the need for further inspection.

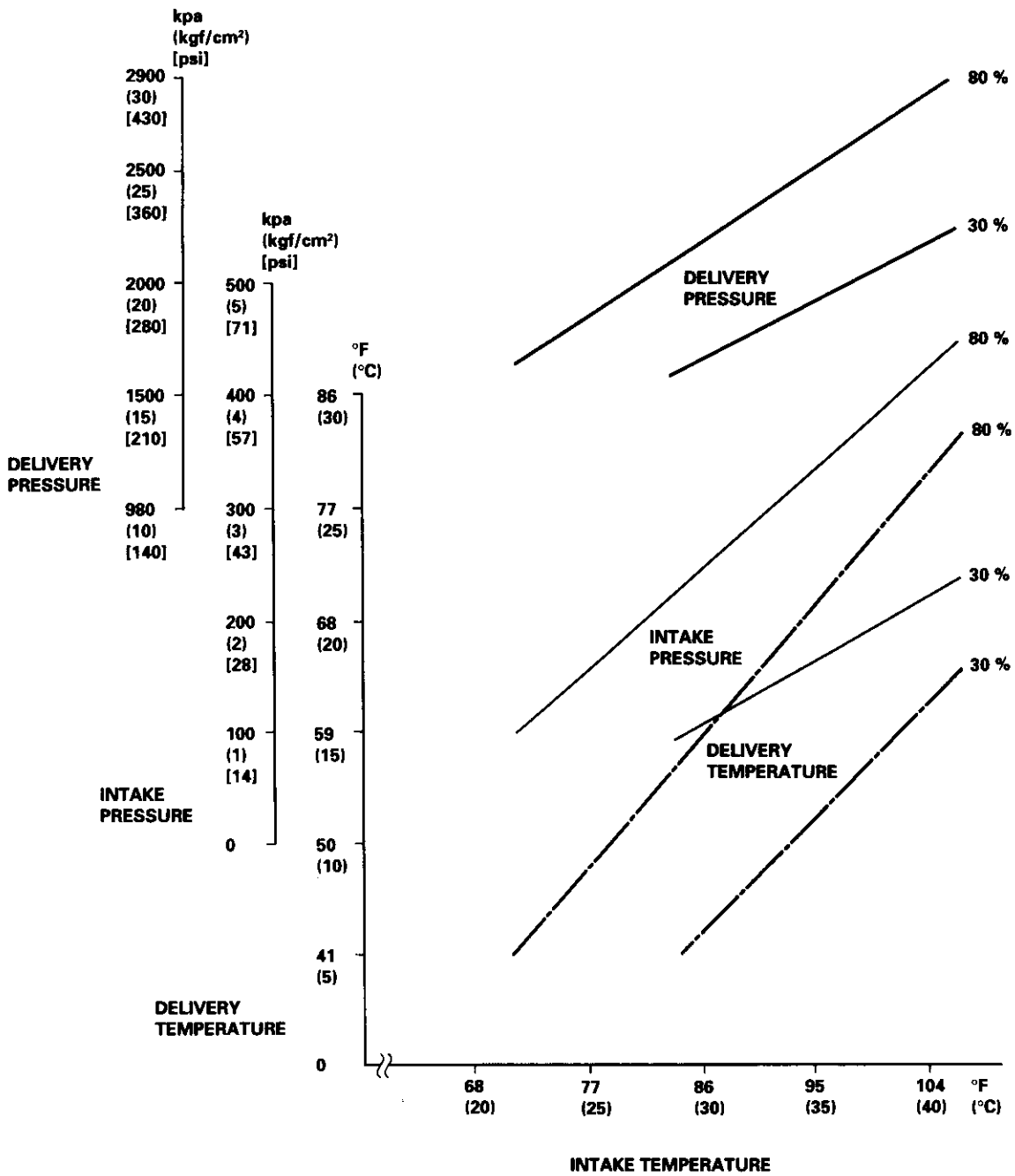

Evaporator

Replacement

CATION:

- **All SRS electrical wiring harnesses are covered with yellow insulation.**
- **Before disconnecting any part of the SRS wire harness, connect the short connector(s).**
- **Replace the entire affected SRS harness assembly if it has an open circuit or damaged wiring.**

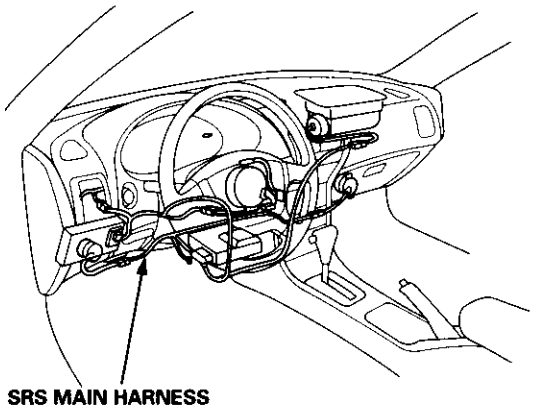

SRS MAIN HARNESS
(Covered with yellow insulation)

1. Recover the refrigerant with a Recovery/Recycling/Charging System (see page 22-22).

2. Remove the bolts, and disconnect the receiver line and the suction line from the evaporator.

   NOTE: Plug or cap the lines immediately after disconnecting to avoid moisture and dust contamination into the system.

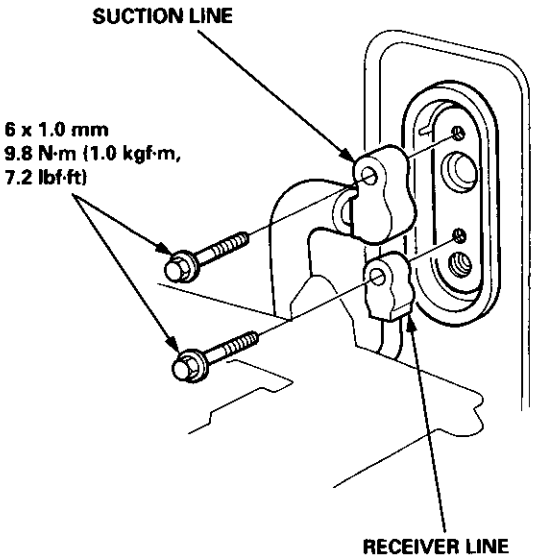

3. Remove the glove box (see section 20).

4. Remove the four bolts and the glove box frame.

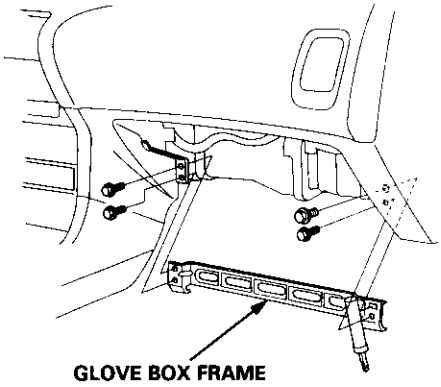

5. Disconnect the connector from the A/C thermostat, and remove the wire harness clips from the evaporator.

6. Remove the four self-tapping screws, mounting bolt and the mounting nut.

7. Disconnect the drain hose, and remove the evaporator.

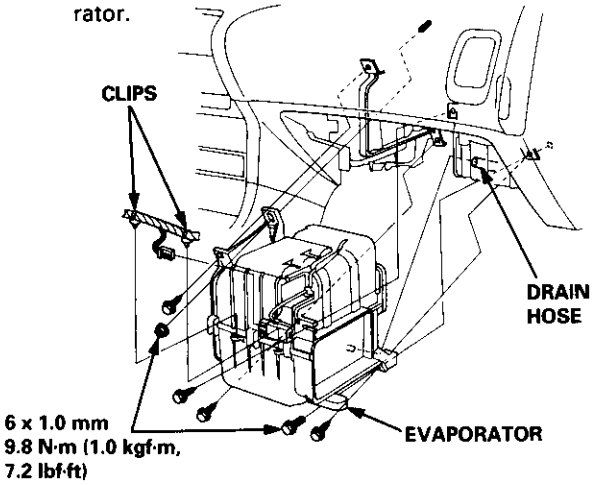

8. Install in the reverse order of removal, and:

   - if you're installing a new evaporator, add refrigerant oil (ND-OIL 8: P/N 38899 – PR7 – A01) (see page 22-21).
   - replace the O-rings with new ones at each fitting, and apply a thin coat of refrigerant oil (ND-OIL 8: P/N 38899 – PR7 – A01) before installing them.
     NOTE: Be sure to use the right O-rings for HFC-134a (R-134a) to avoid leakage.
   - apply sealant to the grommets.
   - make sure that there is no air leakage.
   - charge the system (see page 22-39) and test its performance (see page 22-24).

Overhaul

1. Pull out the A/C thermostat sensor from the evaporator fins.

2. Remove the self-tapping screws and clamps from the housing.

3. Carefully separate the housings and remove the evaporator.

4. If necessary, remove the expansion valve.

   NOTE: When loosening the expansion valve nuts, use a second wrench to hold the expansion valve or evaporator pipe. Otherwise, they can be damaged.

5. Assemble in the reverse order of disassembly, and:

   - replace the O-rings with new ones at each fitting, and apply a thin coat of refrigerant oil (ND-OIL 8: P/N 38899 – PR7 – A01) before installing them. NOTE: Be sure to use the right O-rings for HFC-134a (R-134a) to avoid leakage.
   - install the expansion valve capillary tube with the capillary tube in contact with the suction line directly, and wrap it with tape.
   - reinstall the A/C thermostat sensor to its original location.

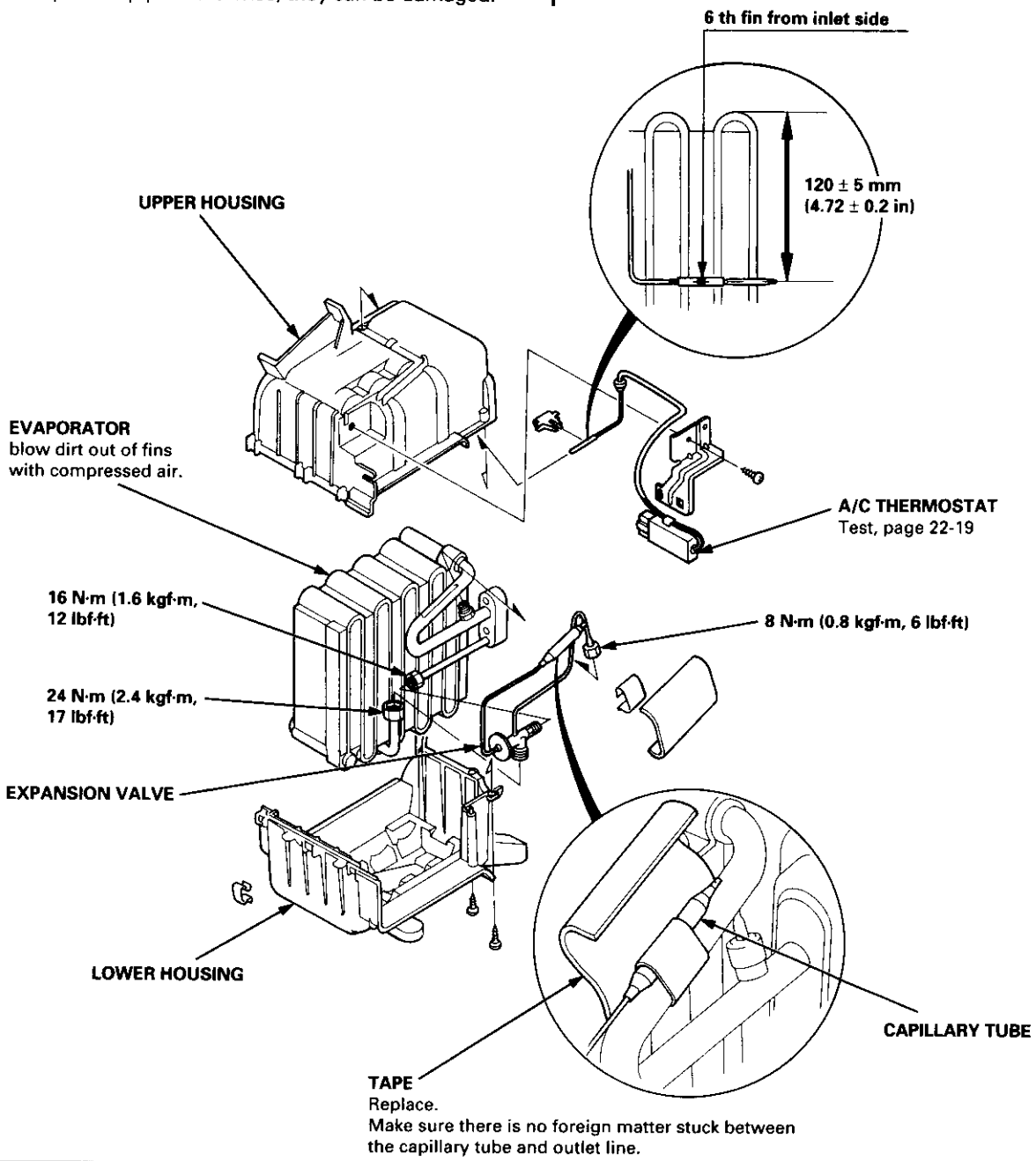

Compressor

Description

This compressor is a Nippondenso piston type compressor for HFC-134a (R-134a). A revolving inclined disc drives the surrounding 10 reciprocating pistons. As the inclined disc revolves, it pushes the pistons, protected by a ceramic shoe, thus compressing the refrigerant.

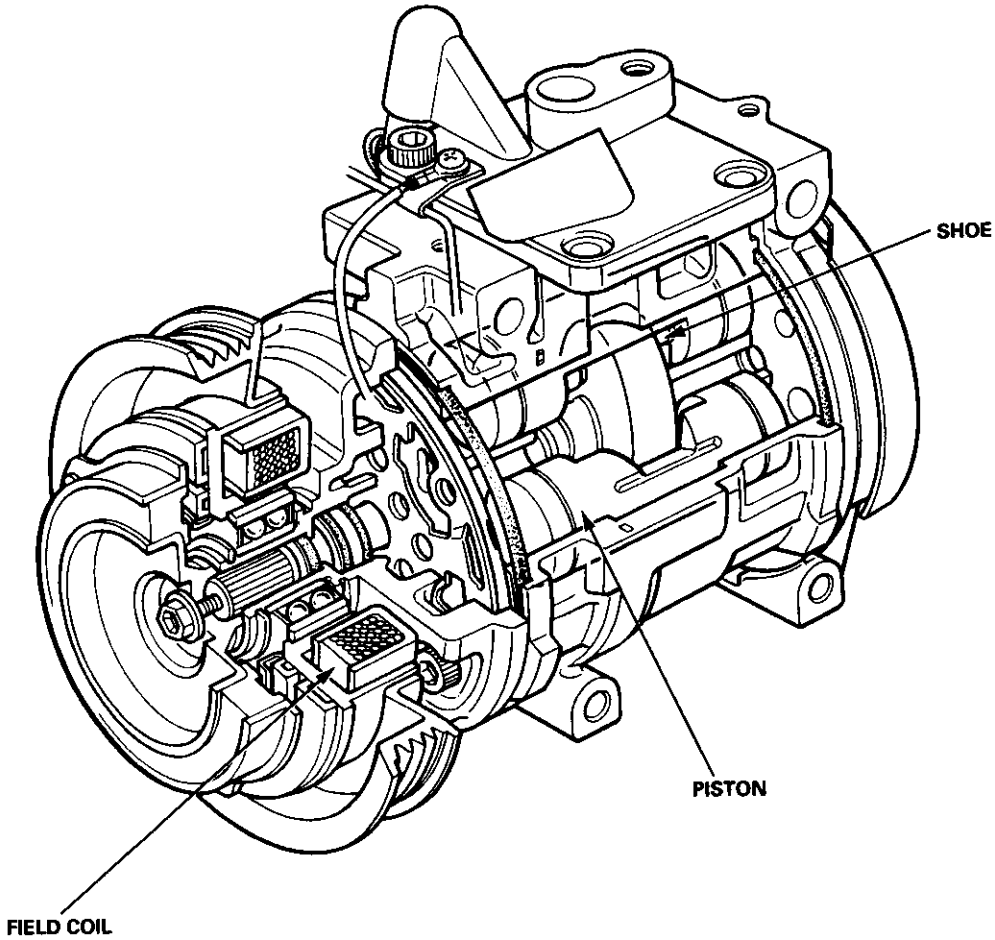

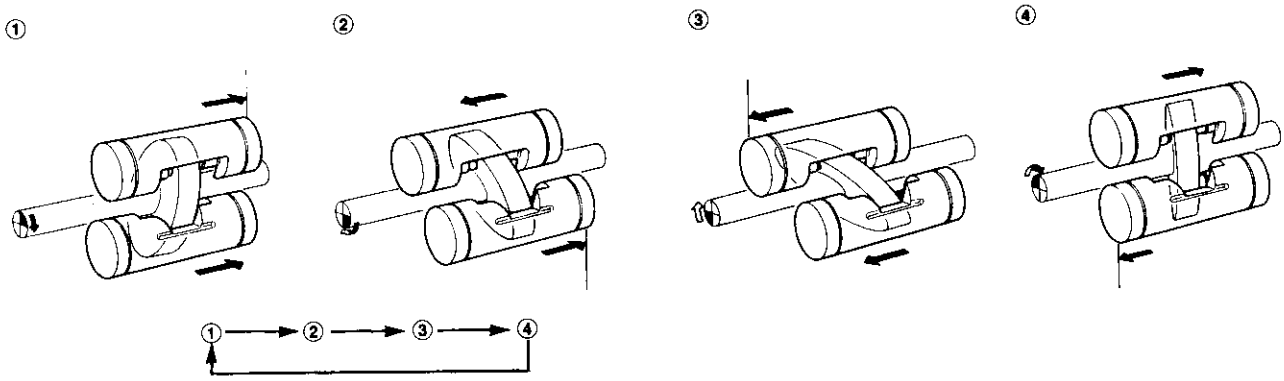

Illustrated Index

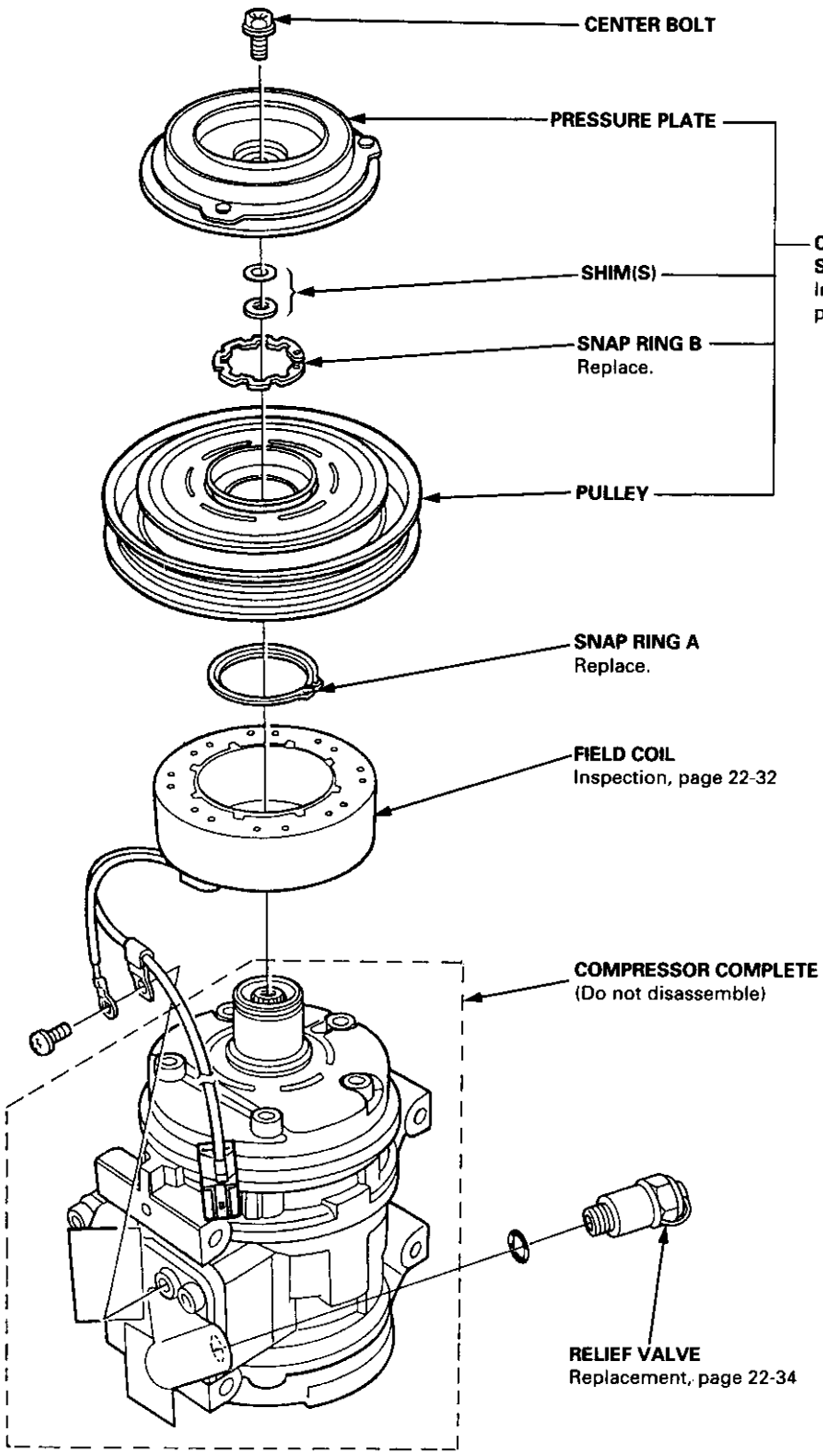

Clutch Inspection

- Check the plated parts of the pressure plate for color changes, peeling or other damage. If there is damage, replace the clutch set.

- Check the pulley bearing play and drag by rotating the pulley by hand. Replace the clutch set with a new one if it is noisy or has excessive play/drag.

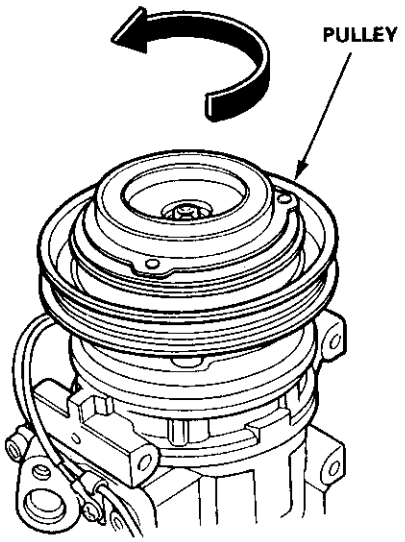

- Measure the clearance between the pulley and the pressure plate all the way around. If the clearance is not within specified limits, the pressure plate must be removed and shims added or removed as required, following the procedure on page 22-33.

  Clearance: 0.50 ± 0.15 mm (0.02 ± 0.01 in)

  NOTE: The shims are available in three thicknesses: 0.1 mm, 0.3 mm and 0.5 mm.

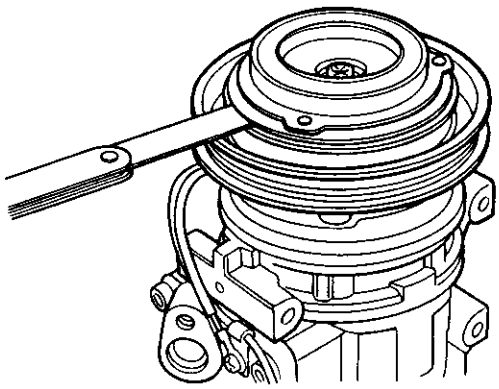

- Check resistance of the field coil.

  Field Coil Resistance: 3.6 ± 0.2 ohm at 68°F (20°C)

  If resistance is not within specifications, replace the field coil.

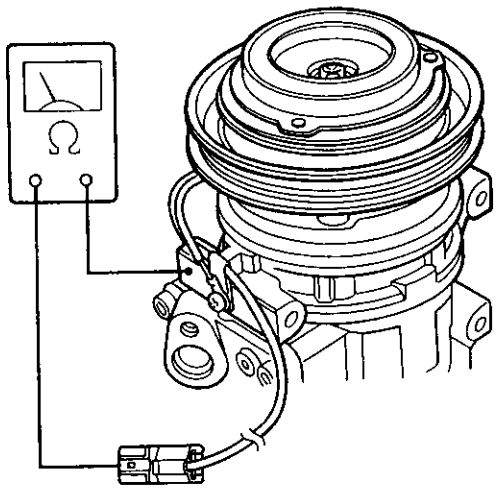

Clutch Overhaul

1. Remove the center bolt while holding the pressure plate.

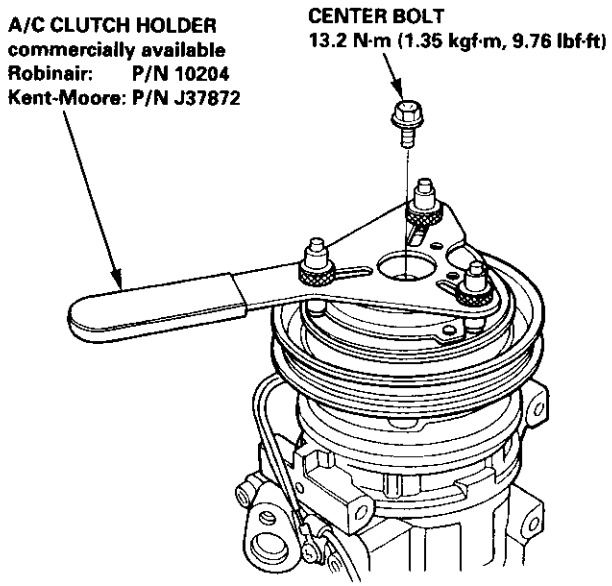

2. Remove the pressure plate and shim(s), taking care not to lose the shims.

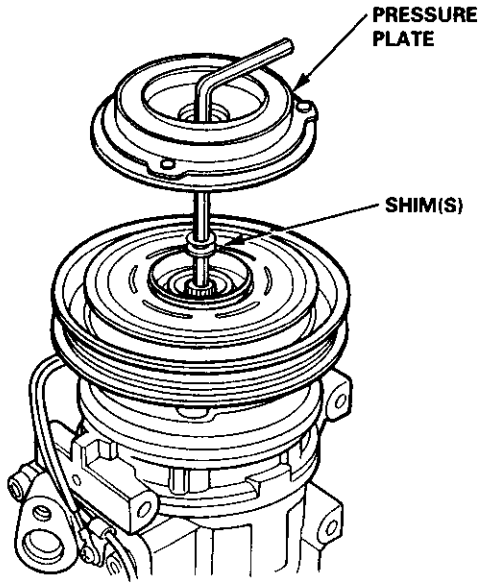

3. Remove the snap ring B with a snap ring pliers, then remove the pulley.

NOTE:
- Be careful not to damage the pulley and compressor during removal/installation.
- Once the snap ring B is removed, replace it with a new one.

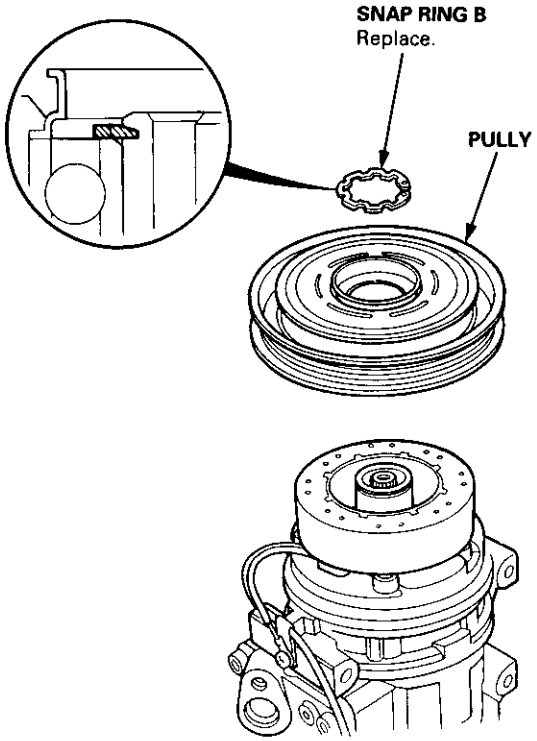

(cont'd)

Clutch Overhaul (cont'd)

4. Remove the screw from the field coil ground terminal. Remove snap ring A with snap ring pliers, then remove the field coil.

   NOTE:
   - Be careful not to damage the field coil and compressor during removal/installation.
   - Once snap ring A is removed, replace it with a new one.

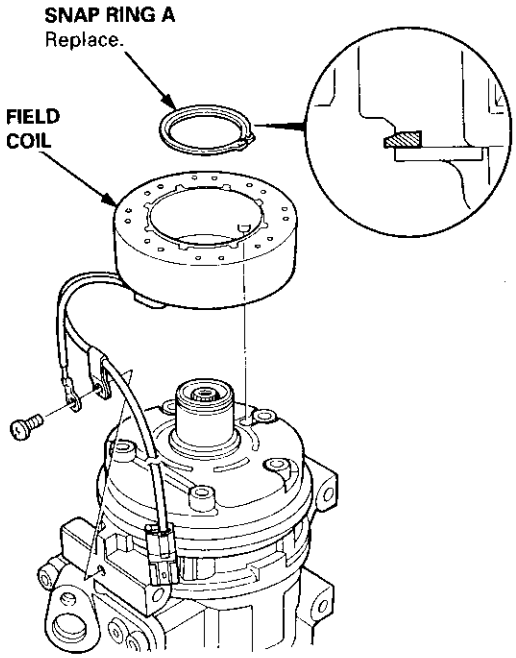

5. Install in the reverse order of removal, and:

   - install the field coil with the wire side facing down (see above).
   - clean the pulley and compressor sliding surfaces with non-petroleum solvent.
   - check the pulley bearings for excessive play.
   - make sure the snap rings are in the groove properly.
   - apply locking agent to the threads of the center bolt, and tighten it securely.
   - make sure that the pulley turns smoothly after it's reassembled.

Relief Valve Replacement

1. Remove the relief valve and the O-ring.

   NOTE:
   - Do not let the compressor oil run out.
   - Make sure there is no foreign matter in the system.

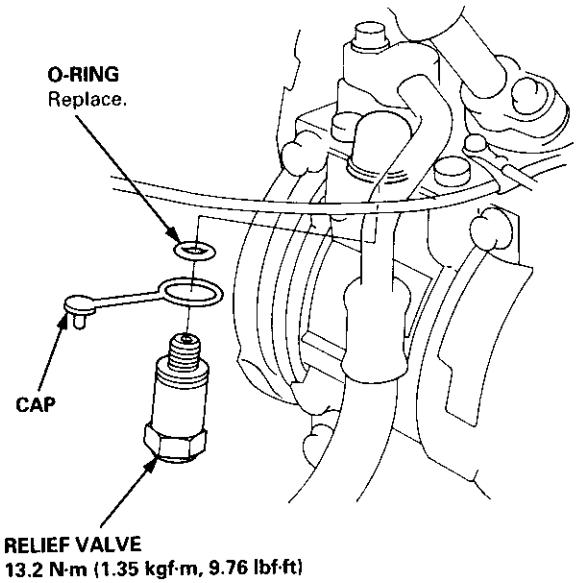

2. Install and tighten the relief valve.

   - Clean the mating surfaces.
   - Replace the O-ring with a new one at the relief valve, and apply a thin coat of refrigerant oil (ND-OIL 8: P/N 38899 – PR7 – A01) before installing it.
     NOTE:
     - To avoid contamination, do not return the oil to the container once dispensed, and never mix it with other refrigerant oils.
     - Immediately after using the oil, replace the cap on the container, and seal it to avoid moisture absorption.
     - Do not spill the refrigerant oil on the car; it may damage the paint; if the refrigerant oil contacts the paint, wash it off immediately.
   - Check for leaks, and insert the cap in the top of the valve.

A/C Compressor Belt

Replacement

Automatic Transmission Type

1. Loosen the adjust pulley bracket pivot bolt and the adjusting bolt, then remove the A/C compressor belt from the pulleys.

2. Remove the two mounting bolts from the left front engine mount, then pass the A/C compressor belt through the gap between the body and left front engine mount.

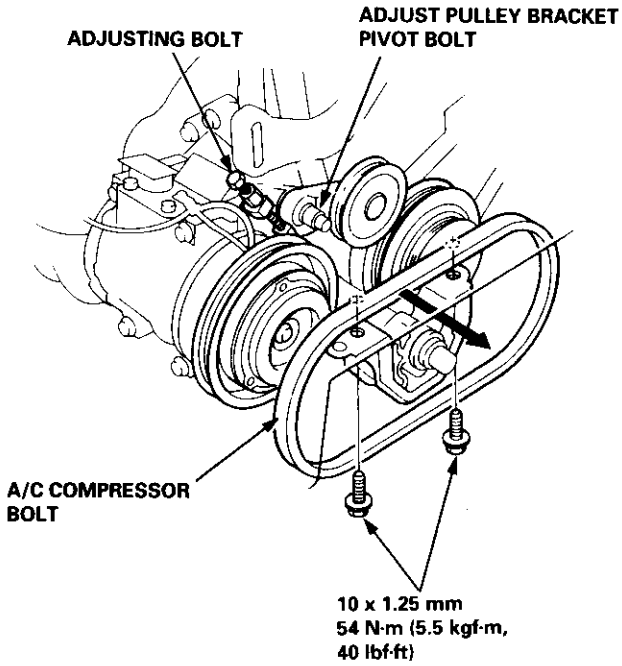

3. Install in the reverse order of removal, and adjust the A/C compressor belt (see page 22-36).

Manual Transmission Type

1. Loosen the adjust pulley bracket pivot bolt and the adjusting bolt, then remove the A/C compressor belt from the pulleys.

2. Remove the two mounting bolts from the left front engine mount.
   Remove the engine mount nut, washer, bolt and the left front engine mount.
   Remove the A/C compressor belt.

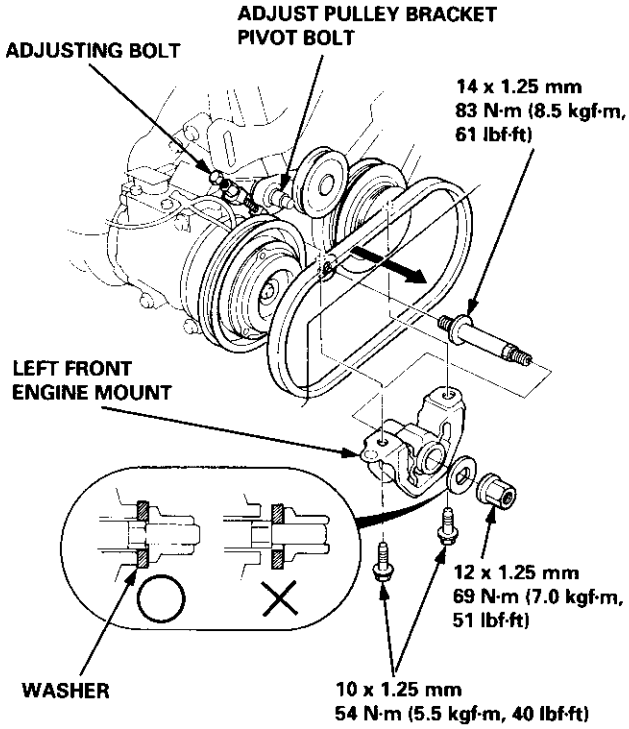

3. Install in the reverse order of removal, and adjust the A/C compressor belt (see page 22-36).

   NOTE: When tightening the engine mount nut, make sure the washer is set properly on the left front engine mount as shown.

A/C Compressor Belt

Adjustment

Deflection Method

1. Apply a force of 98 N (10 kgf, 22 lbf), and measure the deflection between the A/C compressor and the crankshaft pulley.

   A/C Compressor Belt
   Used Belt: B18B1 engine 7.5 – 9.5 mm (0.3 – 0.4 in)
   B18C1 engine 8.5 – 10.5 mm (0.3 – 0.41 in)
   New Belt: 5.0 – 7.0 mm (0.2 – 0.3 in)

   Power Steering Pump Belt
   Used Belt: 11.5 – 13.5 mm (0.45 – 0.53 in)
   New Belt: 8.0 – 10.0 mm (0.3 – 0.39 in)

   NOTE:
   - If there are cracks or any damage evident on the belt, replace it with a new one.
   - "Used belt" means a belt which has been used for five minutes or more.
   - "New belt" means a belt which has been used for less than five minutes.

2. Loosen the adjust pulley bracket pivot bolt and the adjusting bolt lock nut of the A/C compressor belt.

3. Turn the adjusting bolt to get proper belt tension, then retighten the adjust pulley bracket pivot bolt and the adjusting bolt lock nut.

4. Recheck the deflection of the A/C compressor belt.

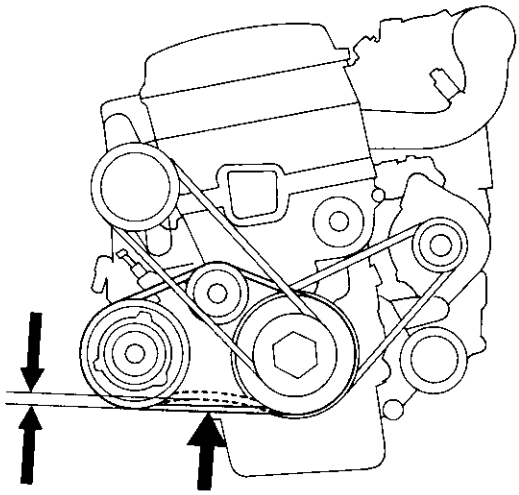

Tension Gauge Method

1. Attach the belt tension gauge to the A/C compressor belt as shown below, and measure the tension of the belt.

   A/C Compressor Belt
   Used Belt: B18B1 engine 390 – 540 N
   (40 – 55 kgf, 88 – 120 lbf)
   B18C1 engine 340 – 490 N
   (35 – 50 kgf, 77 – 110 lbf)
   New Belt: 740 – 880 N (75 – 90 kgf, 170 – 200 lbf)

   Power Steering Pump Belt
   Used Belt: 390 – 540 N (40 – 55 kgf, 88 – 120 lbf)
   New Belt: 740 – 880 N (75 – 90 kgf, 170 – 200 lbf)

   NOTE:
   - If there are cracks or any damage evident on the belt, replace it with a new one.
   - Follow the manufacturer's instructions for the belt tension gauge.
   - "Used belt" means a belt which has been used for five minutes or more.
   - "New belt" means a belt which has been used for less than five minutes.

2. Loosen the adjust pulley bracket pivot bolt and the adjusting bolt lock nut of the A/C compressor belt.

3. Turn the adjusting bolt to get proper belt tension, then retighten the adjust pulley bracket pivot bolt and the adjusting bolt lock nut.

4. Recheck the tension of the A/C compressor belt.

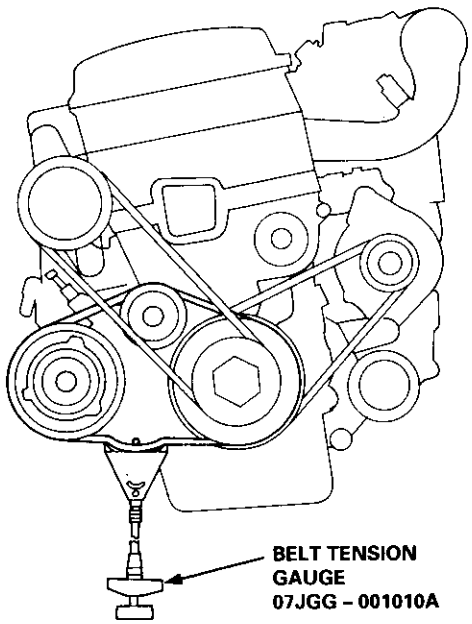

Condenser

Replacement

1. Recover the refrigerant with a Recovery/Recycling/Charging System (see page 22-22).

2. Remove the coolant reservoir.

   NOTE: Do not disconnect the reservoir hose from the coolant reservoir and the radiator.

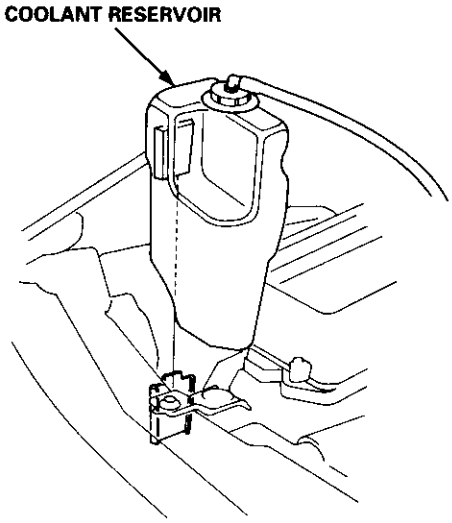

3. Remove the bolts and the radiator upper mount brackets, and remove the bolt from the suction hose bracket.

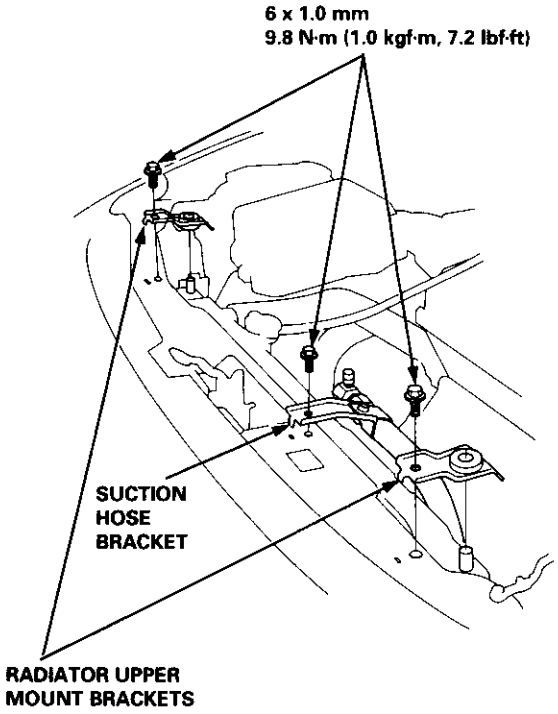

4. Remove the bolts, and disconnect the discharge line and the condenser line from the condenser.
   NOTE: Plug or cap the lines immediately after disconnecting to avoid moisture and dust contamination into the system.

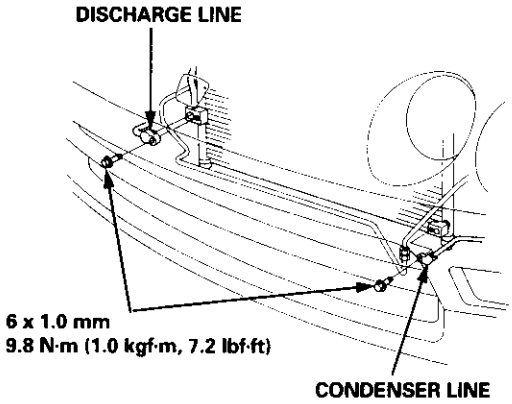

5. Remove the two mounting bolts, then lift out the condenser as shown.
   NOTE: Do not damage the radiator and condenser fins when removing the condenser.

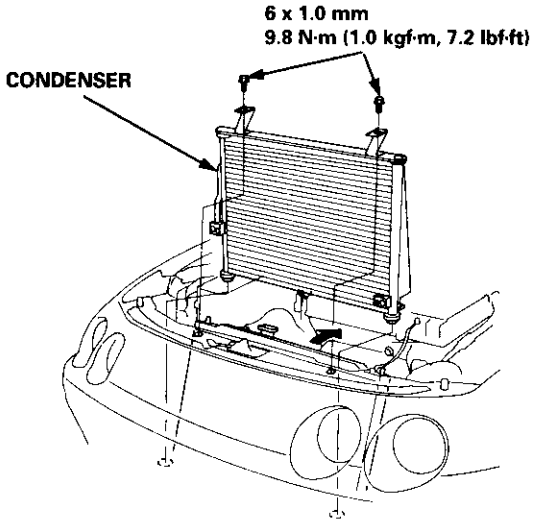

6. Install in the reverse order of removal, and:
   - if you're installing a new condenser, add refrigerant oil (ND-OIL 8: P/N 38899 – PR7 – A01) (see page 22-21).
   - replace the O-rings with new ones at each fitting, and apply a thin coat of refrigerant oil (ND-OIL 8: P/N 38899 – PR7 – A01) before installing them.
     NOTE: Be sure to use the right O-rings for HFC-134a (R-134a) to avoid leakage.
   - do not damage the radiator and condenser fins when installing the condenser.
   - be sure to install the condenser mount cushions securely into the holes.
   - charge the system (see page 22-39) and test its performance (see page 22-24).

Evacuation

Only use service equipment that is U.L.-listed and is certified to meet the requirements of SAE J2210 to remove HFC-134a (R-134a) from the air conditioner system.

CAUTION: Exposure to air conditioner refrigerant and lubricant vapor or mist can irritate eyes, nose and throat. Avoid breathing the air conditioner refrigerant and lubricant vapor or mist.

If accidental system discharge occurs, ventilate work area before resuming service.

R-134a service equipment or vehicle air conditioner systems should not be pressure tested or leak tested with compressed air.

⚠WARNING Some mixtures of air and R-134a have been shown to be combustible at elevated pressures and can result in fire or explosion causing injury or property damage. Never use compressed air to pressure test R-134a service equipment or vehicle air conditioner systems.

Additional health and safety information may be obtained from the refrigerant and lubricant manufactures.

1. When an A/C System has been opened to the atmosphere, such as during installation or repair, it must be evacuated using a R-134a refrigerant Recovery/Recycling/Charging System. (If the system has been open for several days, the receiver/dryer should be replaced.)

2. Connect a R-134a refrigerant Recovery/Recycling/Charging System to the car, as shown, following the equipment manufacturer's instructions.

   NOTE: If low pressure does not reach more than 93.3 kPa (700 mm Hg, 27.6 in·Hg) in 15 minutes, there is probably a leak in the system. Partially charge the system and check for leaks (see Leak Test).

Recovery/Recycling/Charging System

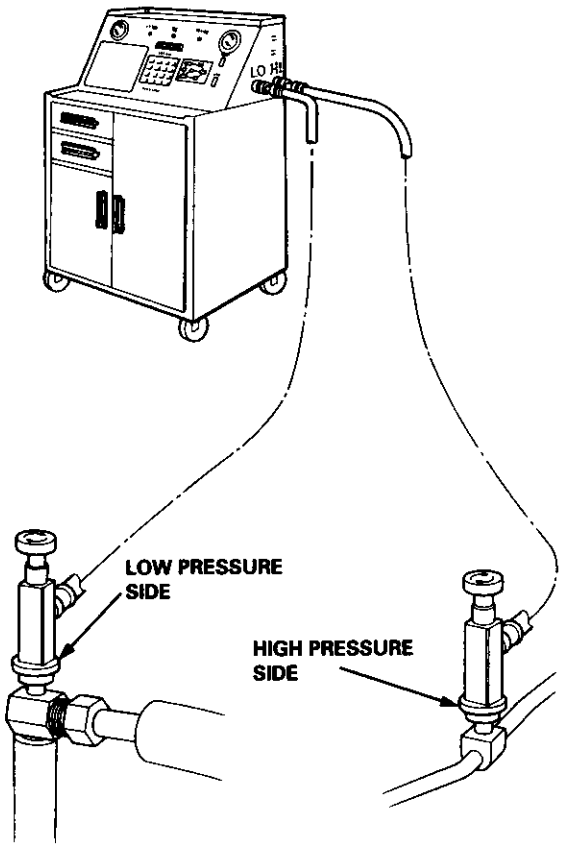

Charging

Only use service equipment that is U.L.-listed and is certified to meet the requirements of SAE J2210 to remove HFC-134a (R-134a) from the air conditioner system.

CAUTION: Exposure to air conditioner refrigerant and lubricant vapor or mist can irritate eyes, nose and throat. Avoid breathing the air conditioner refrigerant and lubricant vapor or mist.

If accidental system discharge occurs, ventilate work area before resuming service. Additional health and safety information may be obtained from the refrigerant and lubricant manufactures.

Refrigerant capacity: 700 $^{+0}_{-50}$ g (24.7 $^{+0}_{-1.8}$oz)

CAUTION: Do not overcharge the system; the compressor will be damaged.

Connect a R-134a refrigerant Recovery/Recycling/Charging System to the car, as shown, following the equipment manufacturer's instructions.

Recovery/Recycling/Charging System

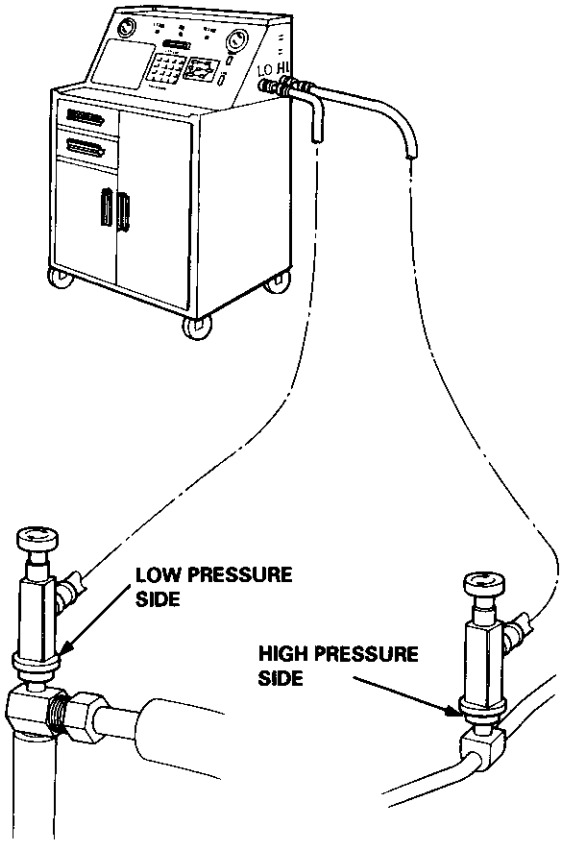

Leak Test

Only use service equipment that is U.L.-listed and is certified to meet the requirements of SAE J2210 to remove HFC-134a (R-134a) from the air conditioner system.

CAUTION: Exposure to air conditioner refrigerant and lubricant vapor or mist can irritate eyes, nose and throat. Avoid breathing the air conditioner refrigerant and lubricant vapor or mist.

If accidental system discharge occurs, ventilate work area before resuming service.

R-134a service equipment or vehicle air conditioner systems should not be pressure tested or leak tested with compressed air.

⚠ WARNING Some mixtures of air and R-134a have been shown to be combustible at elevated pressures and can result in fire or explosion causing injury or property damage. Never use compressed air to pressure test R-134a service equipment or vehicle air conditioner systems.

Additional health and safety information may be obtained from the refrigerant and lubricant manufactures.

1. Connect a R-134a refrigerant Recovery/Recycling/Charging System to the car, as shown, following the equipment manufacturer's instructions.

   NOTE: Be sure to install the same amount of new refrigerant oil back into the A/C system before charging.

2. Open high pressure valve to charge the system to about 98 kPa (1.0 kgf/cm², 14 psi), then close the supply valve.

3. Check the system for leaks using a R-134a refrigerant leak detector with an accuracy of 14 g (0.5 oz) per year or better.

4. If you find leaks that require the system to be opened (to repair or replace houses, fittings, etc.), recover the system according to the Recover Procedure on page 22-22.

5. After checking and repairing leaks, the system must be evacuated (see System Evacuation on page 22-38).

Recovery/Recycling/Charging System

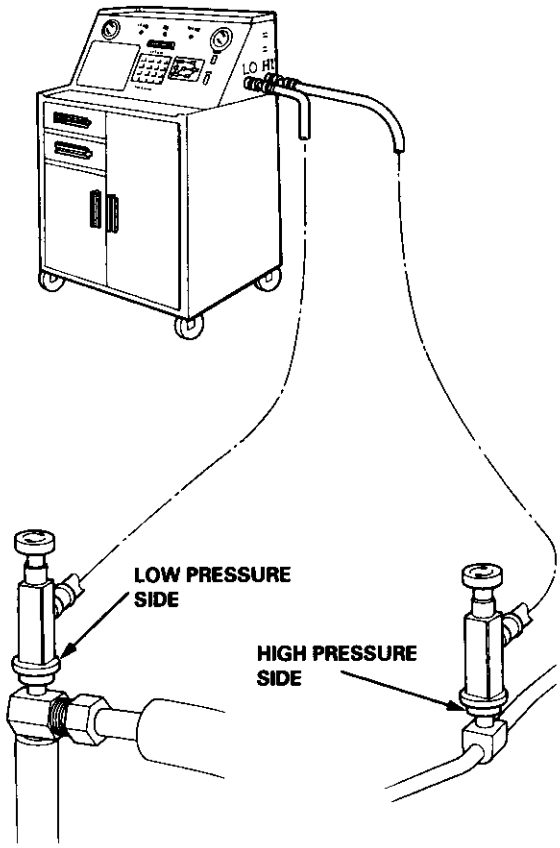

Electrical

Special Tools 23-2

Troubleshooting

Tips and Precautions 23-3
Five-step Troubleshooting 23-5
Schematic Symbols 23-6
Wire Color Codes 23-6
Relay and Control Unit Locations
  Engine Compartment 23-7
  Dashboard and Door 23-8
  Dashboard and Floor 23-10
  Quarter Panel 23-12
Connector Identification and Wire
  Harness Routing 23-13

Index to Circuits and Systems

Airbag 23-265
Air Conditioning ..... Section 21
Alternator 23-98
Anti-lock Brake System (ABS) ..... Section 19
Automatic Transmission ..... Section 14
Battery 23-66
Charging System 23-98
*Cigarette Lighter 23-204
Clock 23-197
*Cruise Control 23-242
Distributor 23-87
Fan Controls 23-109
Fuel and Emissions ..... Section 11
*Fuses
  Under-dash Fuse/Relay Box 23-48
  Under-hood ABS Fuse/Relay Box 23-51
  Under-hood Fuse/Relay Box 23-52
*Gauges
  Engine Coolant Temperature (ECT)
    Gauge 23-126
  Fuel Gauge 23-123
  *Gauge Assembly 23-113
  Speedometer 23-114
  Tachometer 23-114
Ground Distribution 23-60
Heater ..... Section 21
*Horn 23-199
*Ignition Switch 23-70
Ignition System 23-87
Ignition Timing 23-89
Indicator Lights
  *A/T Gear Position 23-132
  Brake System 23-127
  Engine Oil Pressure 23-151
  Low Fuel 23-125
  Malfunction Indicator Lamp (MIL) ..... Section 11
*Integrated Control Unit 23-144
*Interlock System 23-138
Lights, Exterior
  Back-up Lights 23-179
  Brake Lights 23-181
  *Daytime Running Lights (Canada) 23-156
  Front Parking Lights 23-165
  Front Side Marker Lights 23-165
  Front Turn Signal Lights 23-165
  *Hazard Warning Lights 23-184
  Headlights 23-161
  License Plate Lights 23-169
  Taillights
    (Hatchback) 23-166
    (Sedan) 23-167
Lights, Interior
  Cargo Area Light (Hatchback) 23-177
  Ceiling Light 23-175
  Dash Lights Brightness Control 23-170
  Glove Box Light 23-169
  Spotlight 23-174
  Trunk Light (Sedan) 23-177
*Lighting System 23-152
*Moonroof 23-211
PGM-FI System ..... Section 11
Power Distribution 23-54
Power Door Locks 23-233
Power Mirrors 23-216
Power Relays 23-68
Power Windows 23-222
*Rear Window Defogger 23-206
Reminder Systems
  Key-in Reminder System 23-150
  Lights-on Reminder System 23-151
  *Maintenance Reminder System 23-128
  Seat Belt Reminder System 23-125
*Side Marker/Turn Signal/Hazard
  Flasher System 23-184
Spark Plugs 23-97
Starting System 23-73
*Stereo Sound System 23-188
Supplemental Restraint System (SRS) 23-265
Vehicle Speed Sensor (VSS) 23-122
*Wiper/Washer System 23-254

*Read SRS precautions on Page 23-271 before working in these areas.

Special Tools

Ref. No.	Tool Number	Description	Qty.	Page Reference
①	07HAZ–SG00400	Deployment Tool	1	23-300
②	07JAA–001000C	Antenna Nut Wrench	1	23-195
③	07JGG–001010A	Belt Tension Gauge	1	23-108
④**	07LAZ–SL40300	Test Harness C	1	23-201,248,285
⑤*	07LAZ–SL40400	Test Harness D	1	23-287
⑥*	07MAZ–SL00500	Test Harness A	1	23-281
⑦**	07MAZ–SP00500	Test Harness B	1	23-284
⑧	07NAC–SR20100	Fuel Sender Wrench	1	23-124
⑨	07PAZ–0010100	SCS Short Connector	1	23-89

*: Included in SRS Tool Set 07HAZ–SG0000A
**: Included in SRS Tool Set 07MAZ–SL0010A

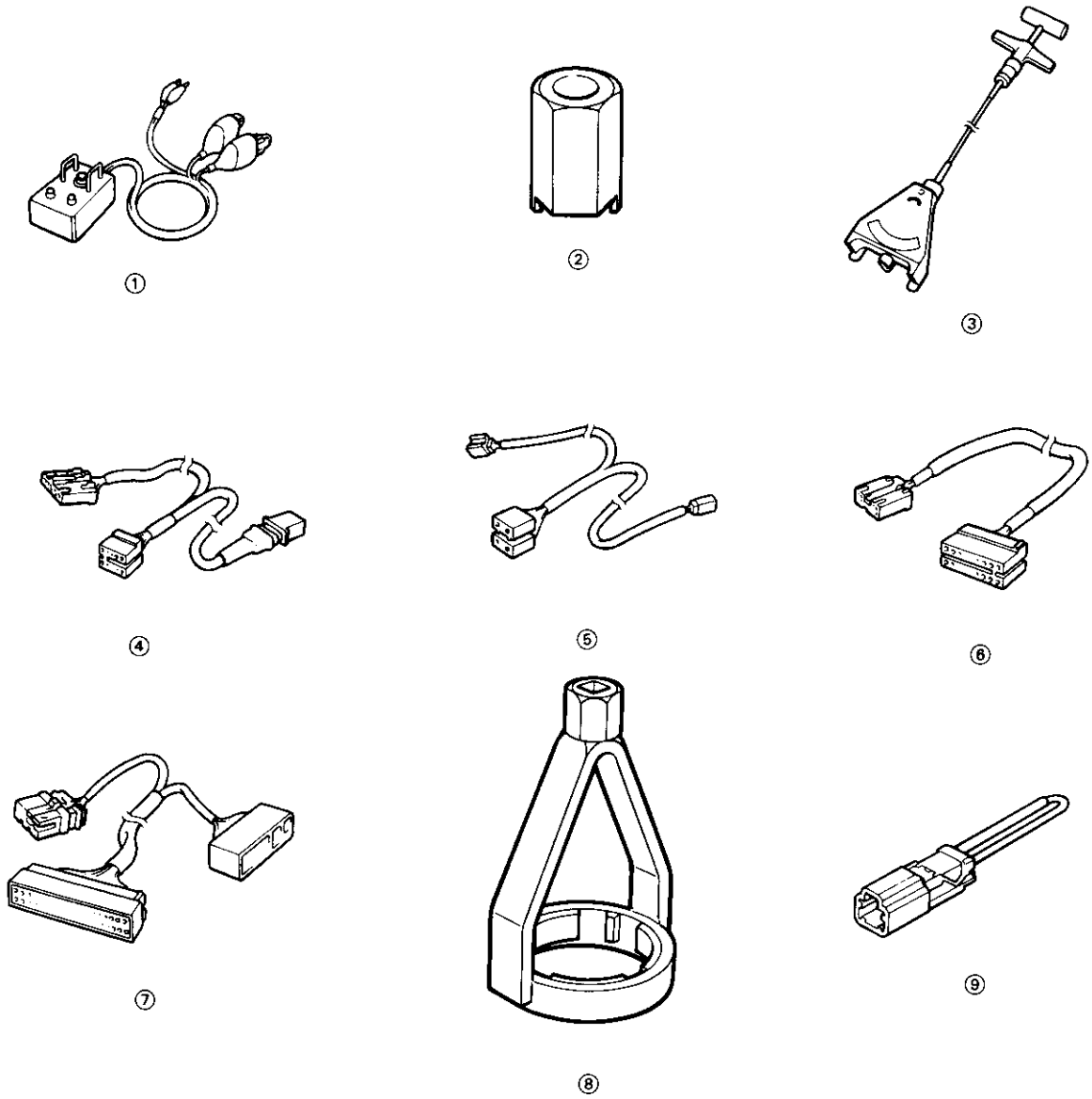

Tips and Precautions

Before Troubleshooting

- Check applicable fuses in the appropriate fuse/relay box.
- Check the battery for damage, state of charge, and clean and tight connections.
- Check the alternator belt tension.

CAUTION:

- **Do not quick-charge a battery unless the battery ground cable has been disconnected, otherwise you will damage the alternator diodes.**
- **Do not attempt to crank the engine with the battery ground cable loosely connected or you will severely damage the wiring.**
- **The original radio has a coded theft protection circuit. Be sure to get the customer's code number before**
  - **disconnecting the battery.**
  - **removing the No. 32 (7.5 A) fuse from the under-hood fuse/relay box.**
  - **removing the radio.**

  After service, reconnect power to the radio and turn it on. When the word "CODE" is displayed, enter the customer's 5-digit code to restore radio operation.

Handling Connectors

- Make sure the connectors are clean and have no loose wire terminals.
- Make sure multiple cavity connectors are packed with grease (except watertight connectors).
- All connectors have push-down release type locks.

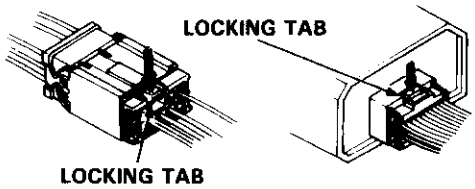

- Some connectors have a clip on their side used to attach them to a mount bracket on the body or on another component. This clip has a pull type lock.

- Some mounted connectors cannot be disconnected unless you first release the lock and remove the connector from its bracket.

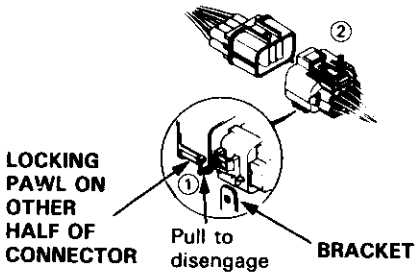

- Never try to disconnect connectors by pulling on their wires; pull on the connector halves instead.
- Always reinstall plastic covers.

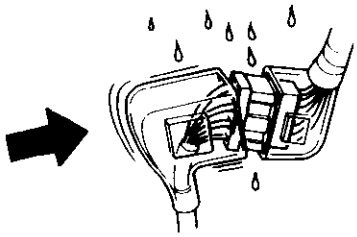

- Before connecting connectors, make sure the terminals are in place and not bent.

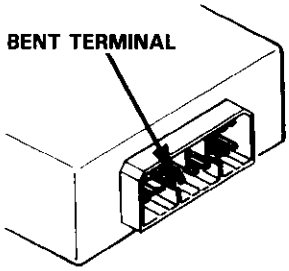

- Check for loose retainer and rubber seals.

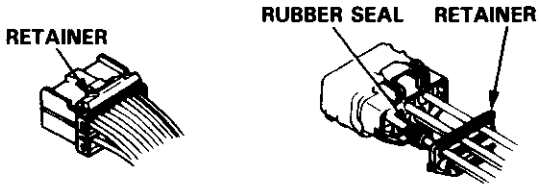

- The backs of some connectors are packed with grease. Add grease if needed. If the grease is contaminated, replace it.

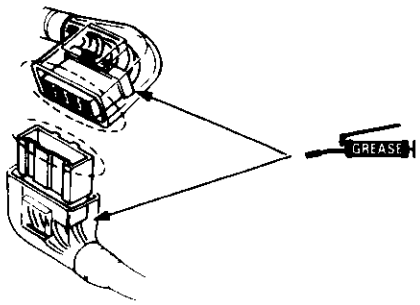

(cont'd)

Tips and Precautions (cont'd)

- Insert the connector all the way and make sure it is securely locked.
- Position wires so that the open end of the cover faces down.

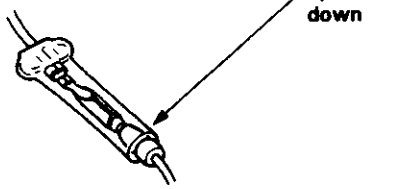

Handling Wires and Harnesses

- Secure wires and wire harnesses to the frame with their respective wire ties at the designated locations.
- Remove clips carefully; don't damage their locks.

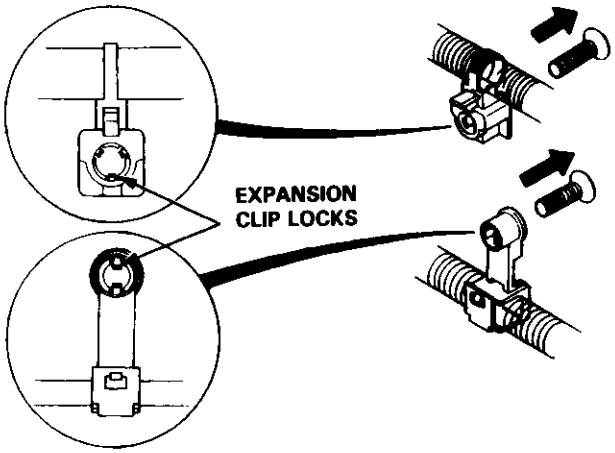

Slip pliers under the clip base and through the hole at an angle, then squeeze the expansion tabs to release the clip.

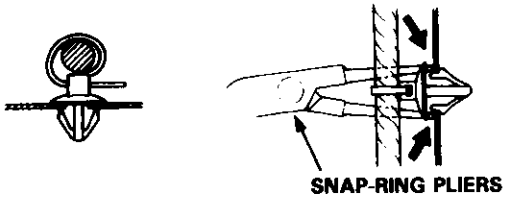

- After installing harness clips, make sure the harness doesn't interfere with any moving parts.
- Keep wire harnesses away from exhaust pipes and other hot parts, from sharp edges of brackets and holes, and from exposed screws and bolts.

- Seat grommets in their grooves properly.

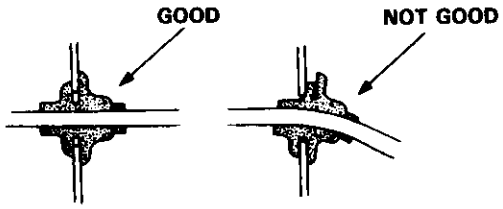

Testing and Repairs

- Do not use wires or harnesses with broken insulation. Replace them or repair them by wrapping the break with electrical tape.
- After installing parts, make sure that no wires are pinched under them.
- When using electrical test equipment, follow the manufacturer's instructions and those described in this manual.
- If possible, insert the probe of the tester from the wire side (except waterproof connector).

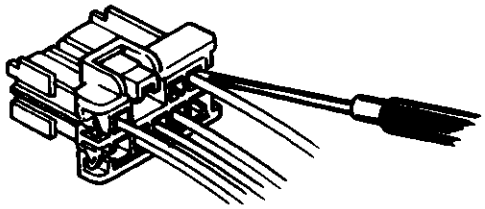

- Use a probe with a tapered tip.

- Refer to the instructions in the Honda Terminal Kit for identification and replacement of connector terminals.

Five-step Troubleshooting

1. **Verify The Complaint**
   Turn on all the components in the problem circuit to verify the customer complaint. Note the symptoms. Do not begin disassembly or testing until you have narrowed down the problem area.

2. **Analyze The Schematic**
   Look up the schematic for the problem circuit. Determine how the circuit is supposed to work by tracing the current paths from the power feed through the circuit components to ground. If several circuits fail at the same time, the fuse or ground is a likely cause.

   Based on the symptoms and your understanding of the circuit operation, identify one or more possible causes of the problem.

3. **Isolate The Problem By Testing The Circuit**
   Make circuit tests to check the diagnosis you made in step 2. Keep in mind that a logical, simple procedure is the key to efficient troubleshooting. Test for the most likely cause of failure first. Try to make tests at points that are easily accessible.

4. **Fix The Problem**
   Once the specific problem is identified, make the repair. Be sure to use proper tools and safe procedures.

5. **Make Sure The Circuit Works**
   Turn on all components in the repaired circuit in all modes to make sure you've fixed the entire problem. If the problem was a blown fuse, be sure to test all of the circuits on that fuse. Make sure no new problems turn up and the original problem does not recur.

Schematic Symbols

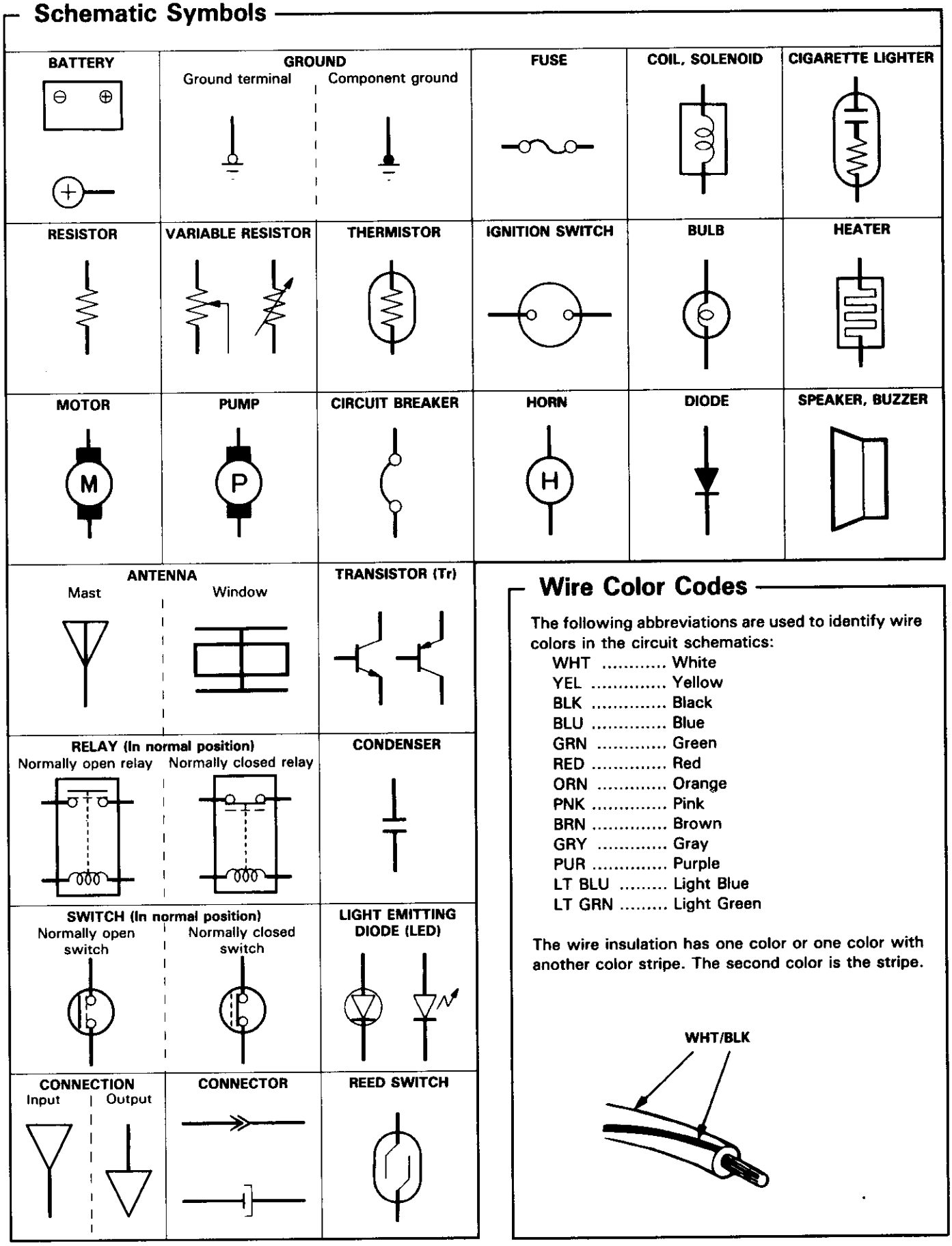

Wire Color Codes

The following abbreviations are used to identify wire colors in the circuit schematics:

WHT ..... White
YEL ..... Yellow
BLK ..... Black
BLU ..... Blue
GRN ..... Green
RED ..... Red
ORN ..... Orange
PNK ..... Pink
BRN ..... Brown
GRY ..... Gray
PUR ..... Purple
LT BLU ..... Light Blue
LT GRN ..... Light Green

The wire insulation has one color or one color with another color stripe. The second color is the stripe.

Relay and Control Unit Locations

Engine Compartment

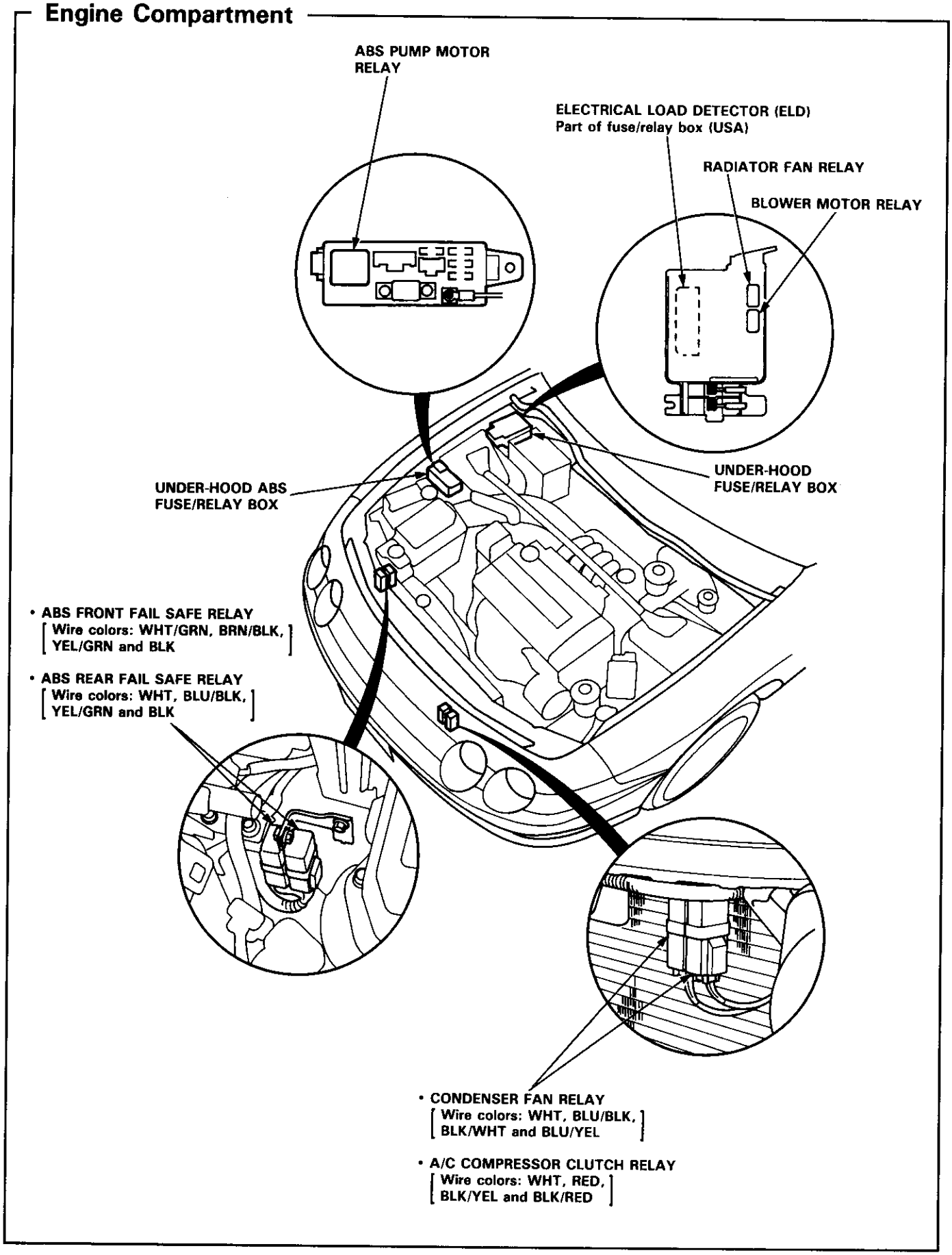

Relay and Control Unit Locations

Dashboard and Door

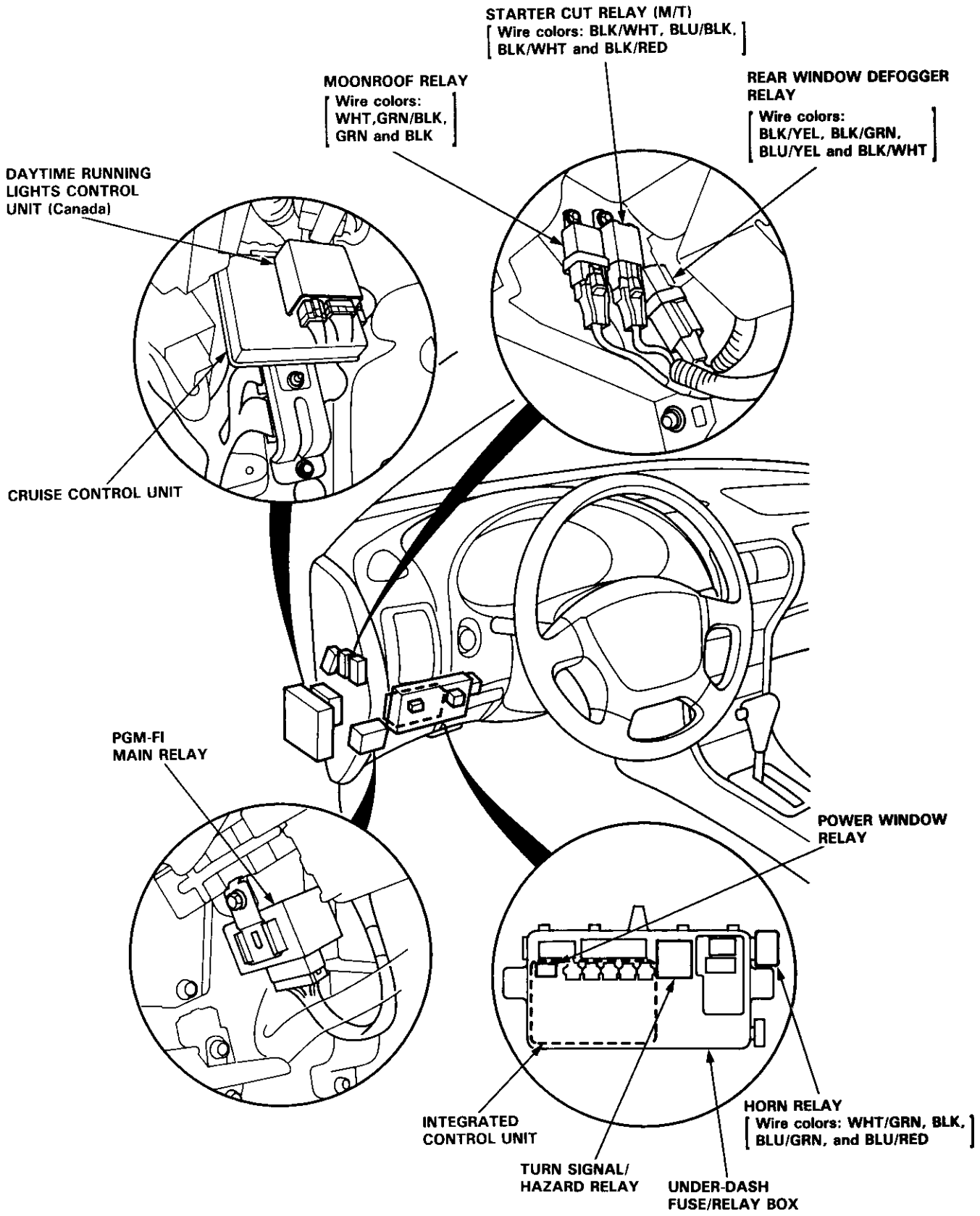

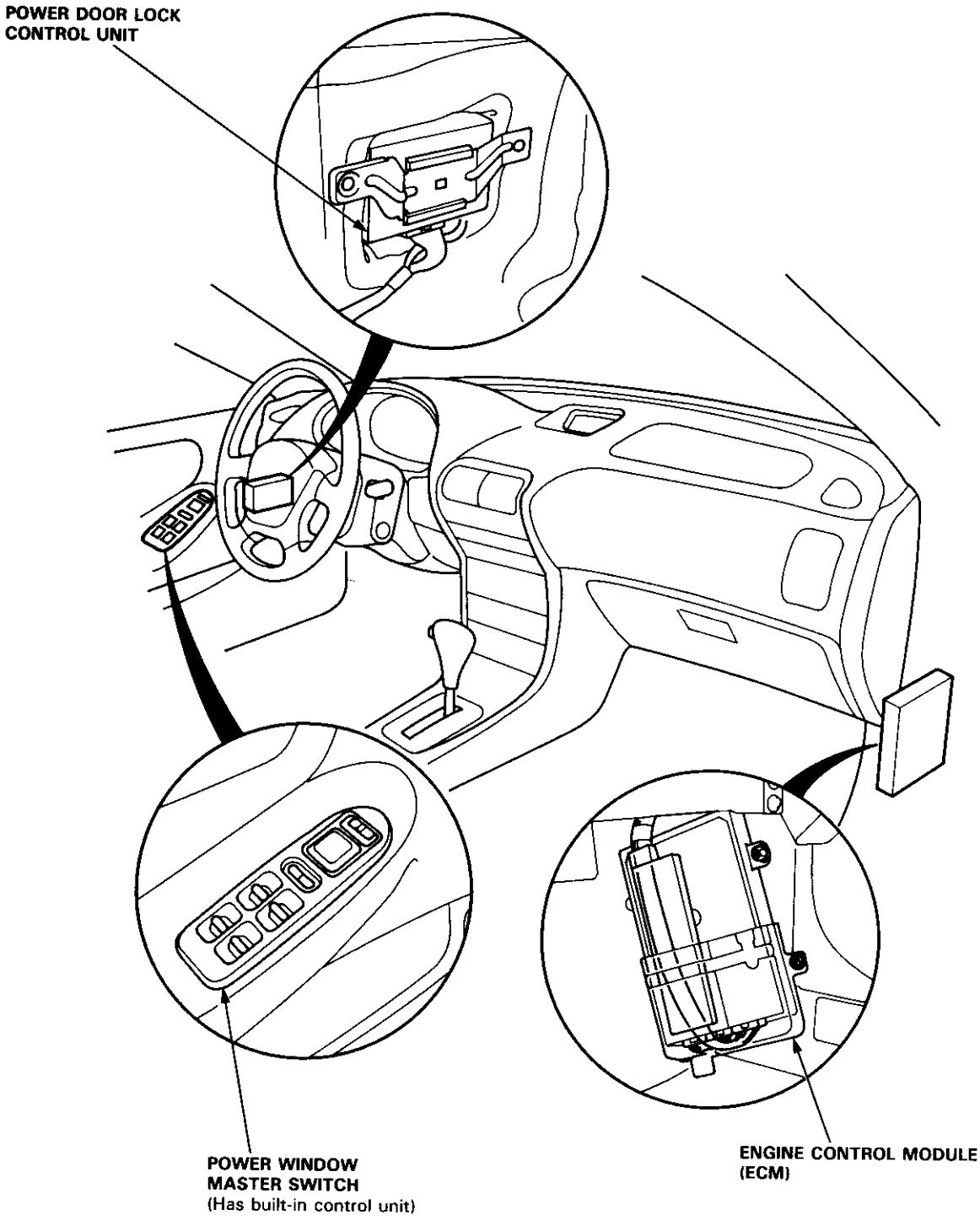
POWER DOOR LOCK
CONTROL UNIT
POWER WINDOW
MASTER SWITCH
(Has built-in control unit)
ENGINE CONTROL MODULE
(ECM)

Relay and Control Unit Locations

Dashboard and Floor

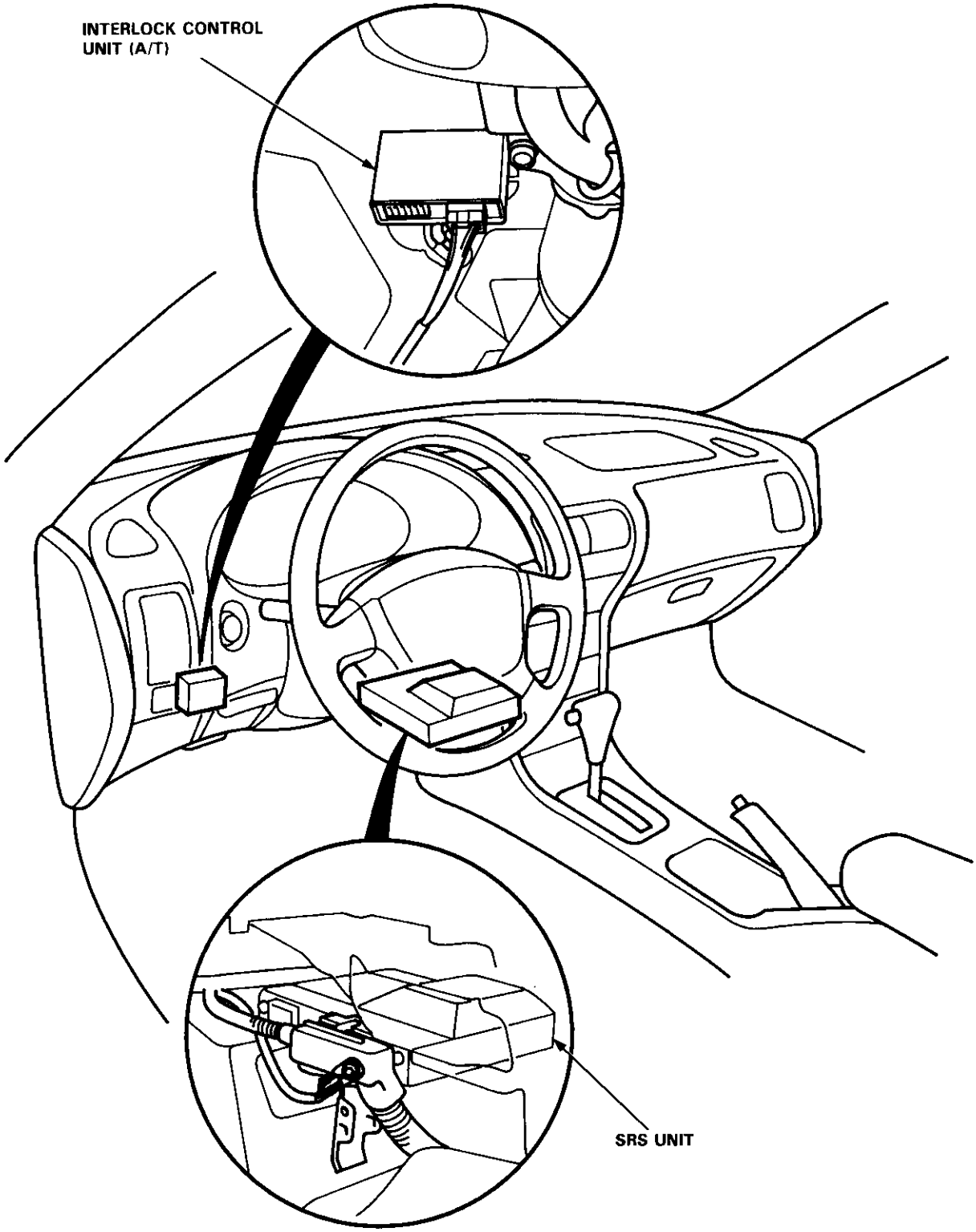

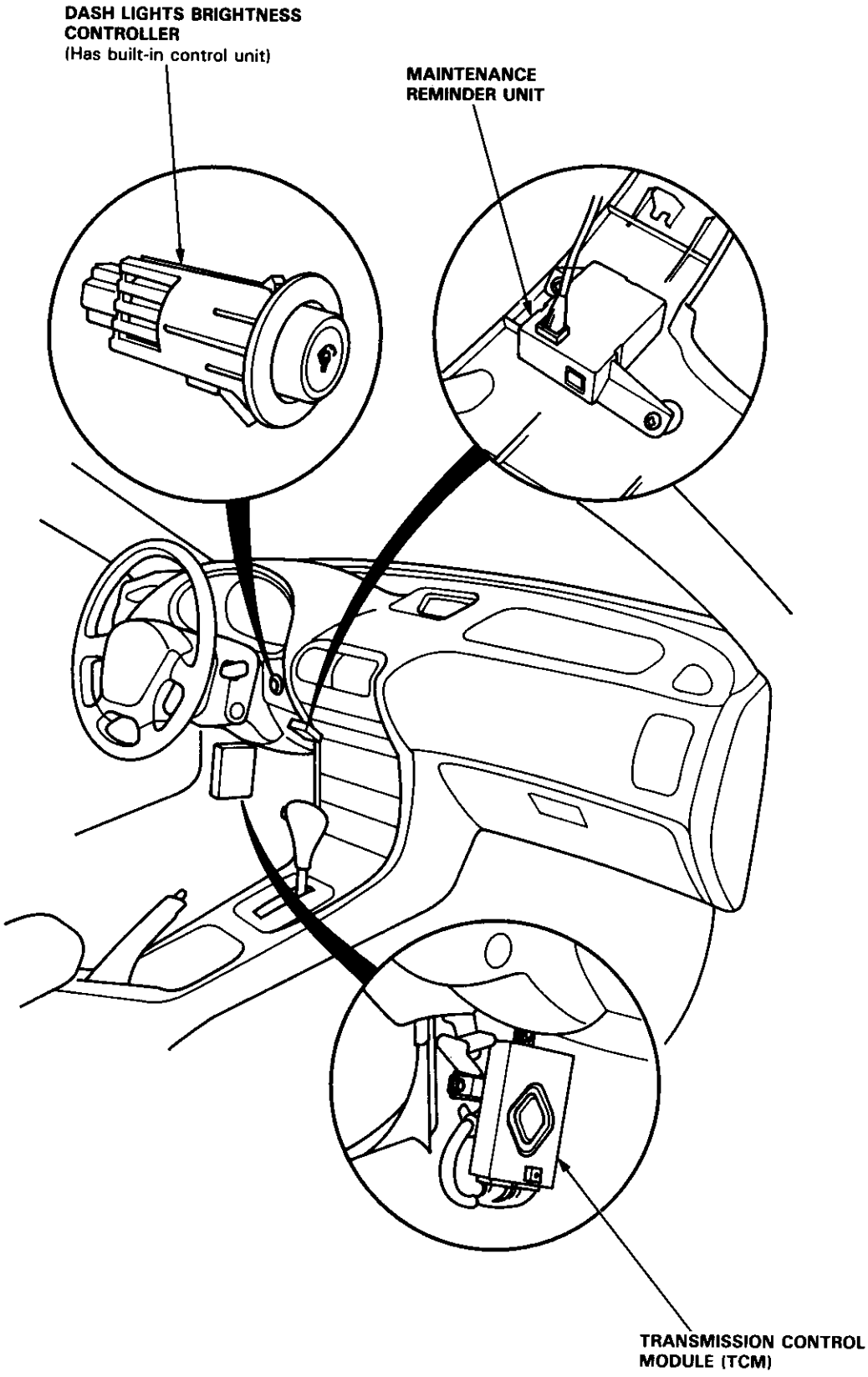
DASH LIGHTS BRIGHTNESS CONTROLLER
(Has built-in control unit)
MAINTENANCE REMINDER UNIT
TRANSMISSION CONTROL MODULE (TCM)

Relay and Control Unit Locations

Quarter Panel

Sedan:

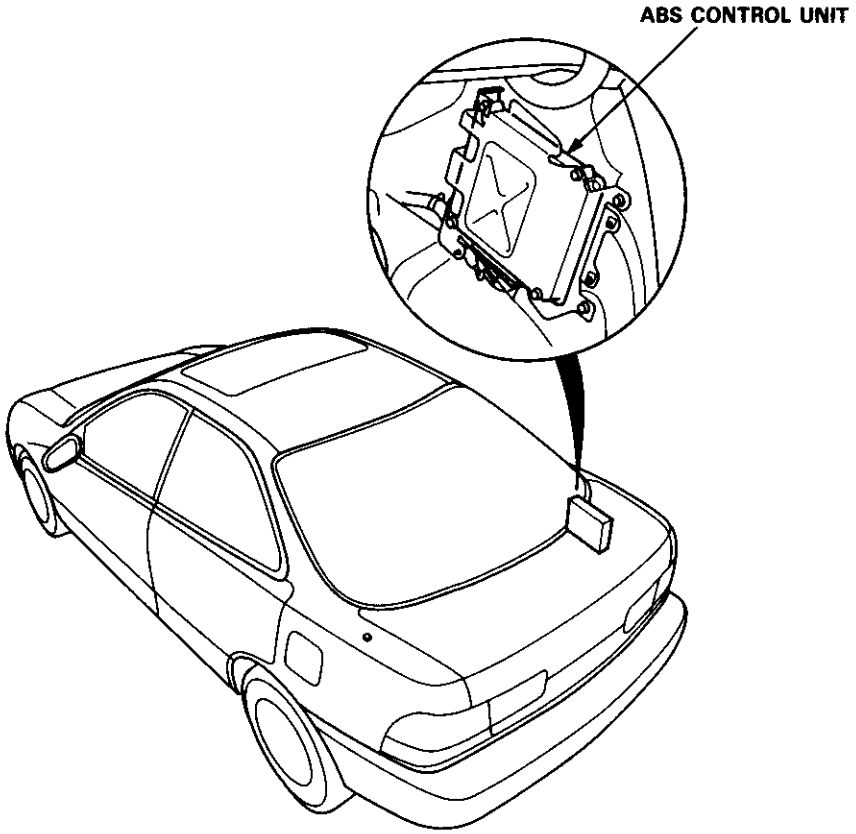

Hatchback:

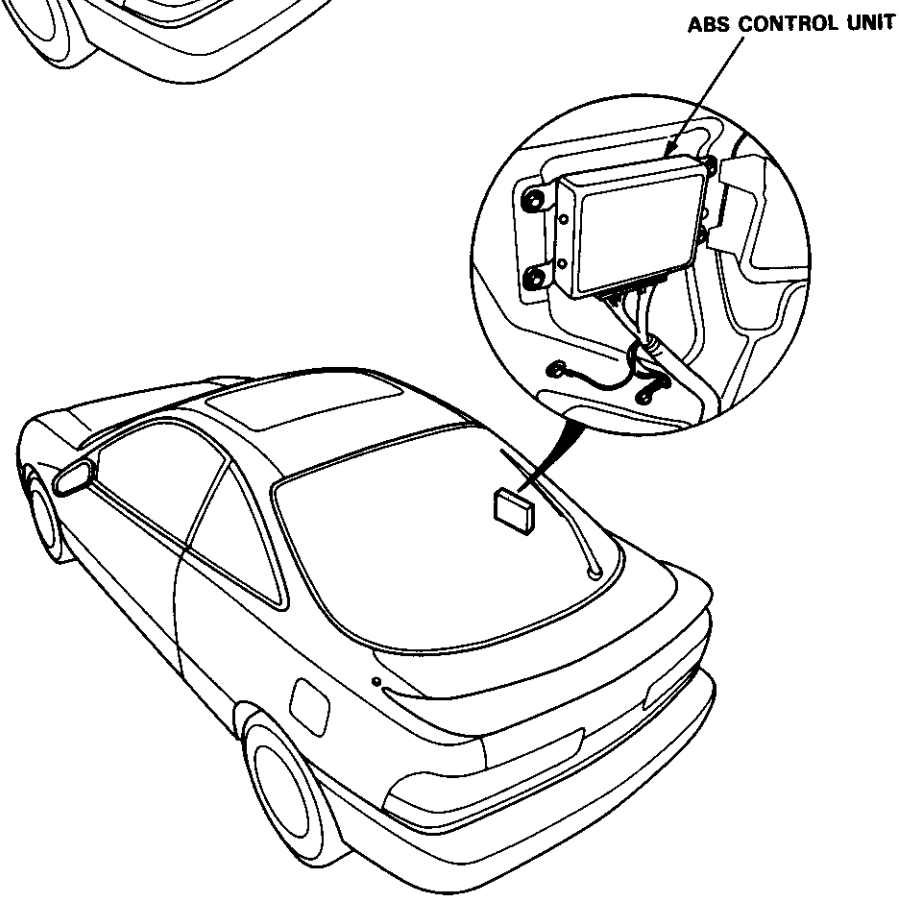

Connector Identification and Wire Harness Routing

How to Identify Connectors:
Identification numbers have been assigned to all connectors. The number is preceded by the letter "C" for connectors, "G" for single ground terminals or "T" for single non-ground terminals.

Harness \ Location	Engine Compartment	Dashboard	Others (Floor, Door, Trunk, Roof)
Starter cables	T1, T2, and ⊕		
Battery ground cable	G1 and ⊖		
Engine ground cable A	T3 G2		
Engine ground cable B	T4 G3		
Under-hood ABS fuse/relay box cable	T5 and ⊕		
Engine wire harness	C101 through C134 T101 and T102 G101		
A/C wire harness	C151 through C156 G151		
ABS modulator unit wire harness	C161 through C168		
Engine compartment wire harness	C301 through C320 G301		
Main wire harness	C201 through C223 G201 and G202	C401 through C449 G401	
Rear wire harness			C501 through C536 G501, G502 and G503
Dashboard wire harness		C551 through C569 G551	
Driver's door wire harness			C601 through C612
Front passenger's door wire harness			C626 through C634
Left rear door wire harness (Sedan)			C651 through C654
Right rear door wire harness (Sedan)			C656 through C659
Roof wire harness			C661 through C667
Heater sub-harness A		C671 through C677	
Heater sub-harness B		C681 through C684	
ABS sub-harness			C701 through C706 G701, G702 and G703 (Sedan)
Tailgate wire harness (Hatchback)			C751 through C756 G751
Spoiler sub-harness (Hatchback)			C761 through C763
Rear window defogger ground wire (Hatchback)			C771 G771
SRS main harness			C801 through C807 G801

Starter Cables

Connector or Terminal	Number of Cavities	Location	Connects to	Notes
T1 T2		Right side of engine compartment Right side of engine compartment	Under-hood fuse/relay box Starter motor	
⊕		Battery	Battery positive terminal	

Battery Ground Cable

Connector or Terminal	Number of Cavities	Location	Connects to	Notes
G1		Right front shock tower	Body ground, via battery ground cable	
⊖		Battery	Battery negative terminal	

Engine Ground Cable A

Connector or Terminal	Number of Cavities	Location	Connects to	Notes
T3		Left side of engine	Valve cover	
G2		Left side of engine compartment	Body ground, via engine ground wire A	

Engine Ground Cable B

Connector or Terminal	Number of Cavities	Location	Connects to	Notes
T4		Right side of engine compartment	Transmission housing	
G3		Right side of front frame	Body ground, via engine ground wire B	

A/C Wire Harness

Connector or Terminal	Number of Cavities	Location	Connects to	Notes
C151 C152 C153 C154 C155 C156	8 4 4 2 2 1	Right side of engine compartment Left side of engine compartment Left side of engine compartment Left side of engine compartment Left side of engine compartment Left side of engine compartment	Main wire harness (C207) Condenser fan relay A/C compressor clutch relay A/C pressure switch Condenser fan motor A/C compressor clutch	
G151		Right side of front frame		

Under-hood ABS Fuse/Relay Box Cable

Connector or Terminal	Number of Cavities	Location	Connects to	Notes
T5		Right side of engine compartment	Under-hood ABS fuse/relay box	
⊕		Right side of engine compartment	Battery positive terminal	

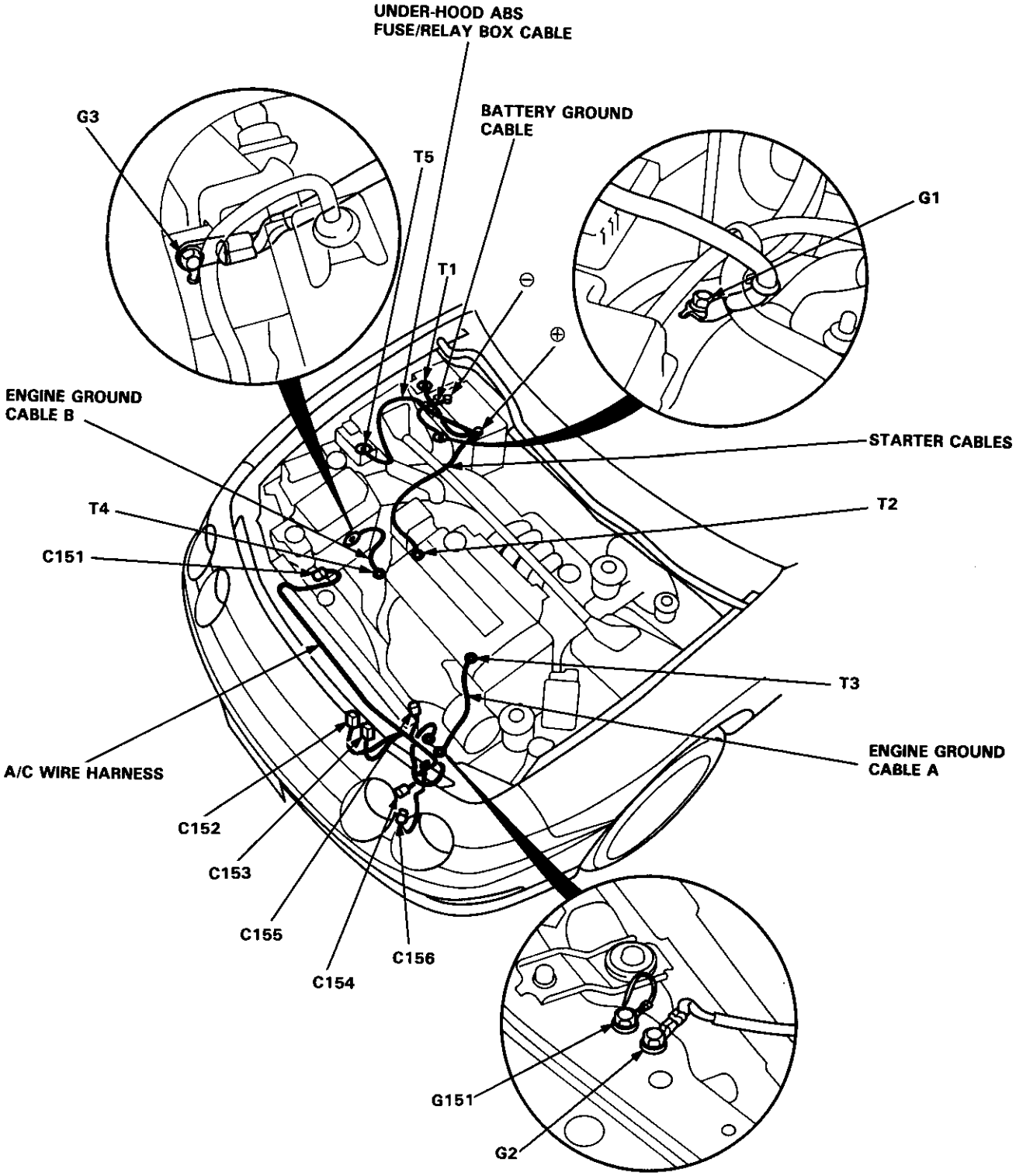
UNDER-HOOD ABS
FUSE/RELAY BOX CABLE
G3
BATTERY GROUND
CABLE
T5
G1
T1
⊖
⊕
ENGINE GROUND
CABLE B
STARTER CABLES
T4
T2
C151
T3
ENGINE GROUND
CABLE A
A/C WIRE HARNESS
C152
C153
C155
C156
C154
G151
G2

Engine Wire Harness (B18B1 engine)

Connector or Terminal	Number of Cavities	Location	Connects to	Notes
C101	4	Right side of engine compartment	Main wire harness (C221)	
C102	10	Right side of engine compartment	Main wire harness (C222)	
C103	14	Right side of engine compartment	Main wire harness (C223)	
C104	6	Right side of engine compartment	Main wire harness (C220)	
C105	1	Right side of engine compartment	Starter solenoid	
C106	2	Right side of engine	Engine coolant temperature (ECT) sensor	
C107	1	Right side of engine	Engine coolant temperature (ECT) gauge sending unit	
C108	2	Transmission	Back-up light switch	M/T
C108	2	Transmission	Lock-up control solenoid valve A and B	A/T
C109	2	Middle of engine	Ignition coil	
C110	8	Middle of engine	Top dead center/Crankshaft position/Cylinder position (TDC/CKP/CYP) sensor	
C111	2	Right side of engine	Engine coolant temperature (ECT) switch	
C112	3	Right side of engine compartment	Vehicle speed sensor (VSS)	
C113	4	Middle rear of engine compartment	Heated oxygen sensor (HO2S)	
C114	3	Middle of engine	MAP sensor	
C115	3	Middle of engine	Throttle position (TP) sensor	
C116	2	Middle of engine	Idle air control (IAC) valve	
C117	2	Middle of engine	Evaporative emission (EVAP) purge control solenoid valve	
C118	1	Middle of engine	Engine oil pressure switch	
C119	4	Left side of engine	Alternator	
C120	2	Middle of engine	Intake air temperature (IAT) sensor	
C121	2	Middle of engine	No. 1 fuel injector	
C122	2	Middle of engine	No. 2 fuel injector	
C123	2	Middle of engine	No. 3 fuel injector	
C124	2	Middle of engine	No. 4 fuel injector	
C125	8	Left side of engine compartment	Junction connector	
C126	2	Left side of engine compartment	Engine compartment wire harness (C304)	
C127	14	Left side of engine compartment	Engine compartment wire harness (C305)	
C128	3	Transmission	Shift control solenoid valve A and B	A/T
C129	2	Transmission	Countershaft speed sensor	A/T
C130	2	Transmission	Mainshaft speed sensor	A/T
T101		Left side of engine	Alternator	
T102		Right side of engine compartment	Under-hood fuse/relay box	
G101		Right side of engine	Engine ground, via engine wire harness	

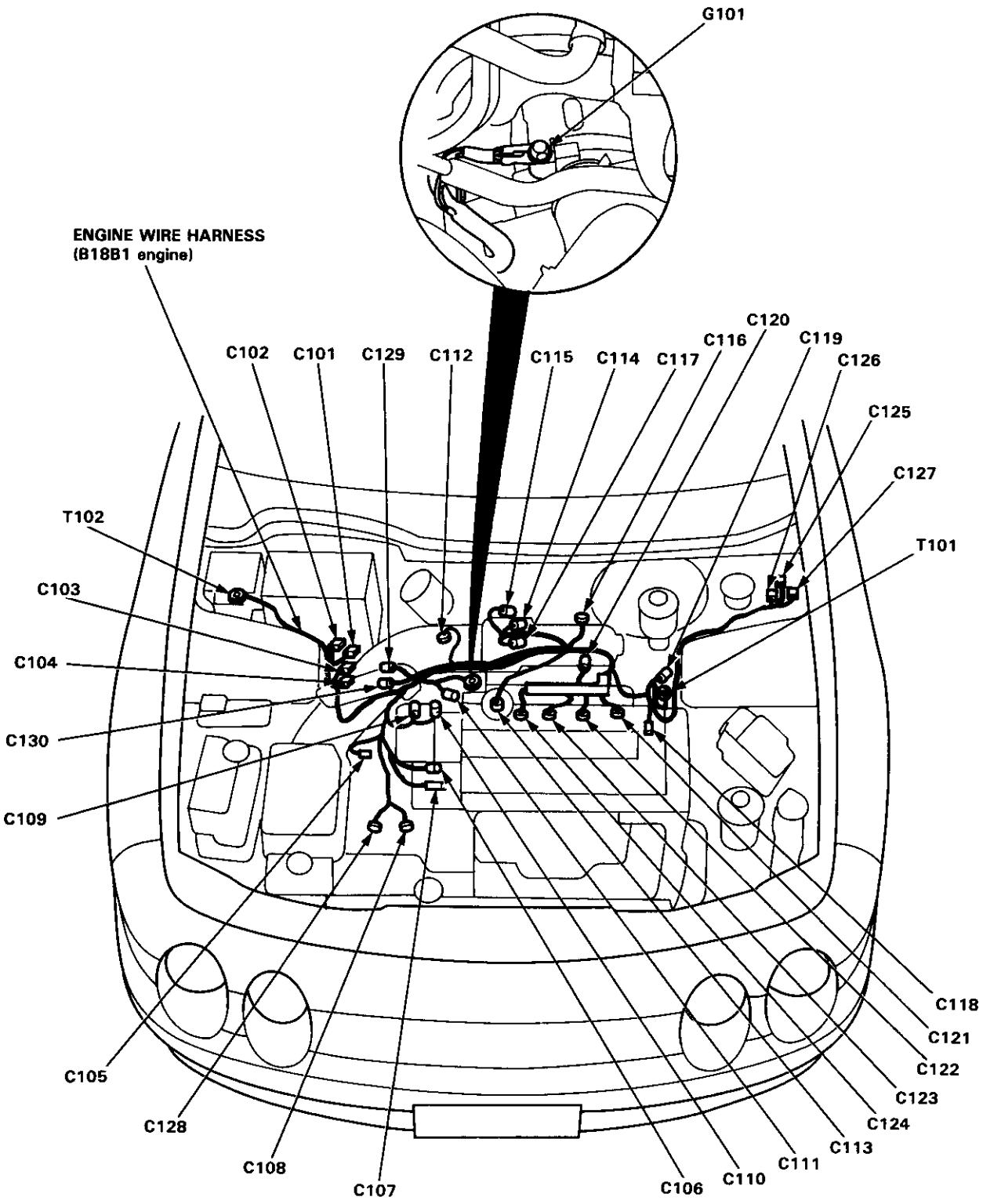
G101
ENGINE WIRE HARNESS
(B18B1 engine)
C102
C101
C129
C112
C115
C114
C117
C116
C120
C119
C126
C125
C127
T102
T101
C103
C104
C130
C109
C105
C128
C108
C107
C106
C110
C111
C113
C124
C123
C122
C121
C118

Engine Wire Harness (B18C1 engine)

Connector or Terminal	Number of Cavities	Location	Connects to	Notes
C101	4	Right side of engine compartment	Main wire harness (C221)	
C102	10	Right side of engine compartment	Main wire harness (C222)	
C103	14	Right side of engine compartment	Main wire harness (C223)	
C104	2	Right side of engine compartment	Main wire harness (C220)	
C105	1	Right side of engine compartment	Starter solenoid	
C106	2	Right side of engine	Engine coolant temperature (ECT) sensor	
C107	1	Right side of engine	Engine coolant temperature (ECT) gauge sending unit	
C108	2	Transmission	Back-up light switch	
C109	2	Middle of engine	Ignition coil	
C110	8	Middle of engine	Top dead center/Crankshaft position/Cylinder position (TDC/CKP/CYP) sensor	
C111	2	Right side of engine	Engine coolant temperature (ECT) switch	
C112	3	Right side of engine compartment	Vehicle speed sensor (VSS)	
C113	4	Middle rear of engine compartment	Heated oxygen sensor (HO2S)	
C114	3	Middle of engine	MAP sensor	
C115	3	Middle of engine	Throttle position (TP) sensor	
C116	2	Middle of engine	Idle air control (IAC) valve	
C117	2	Middle of engine	Evaporative emission (EVAP) purge control solenoid valve	
C118	1	Middle of engine	Engine oil pressure switch	
C119	4	Left side of engine	Alternator	
C120	2	Middle of engine	Intake air temperature (IAT) sensor	
C121	2	Middle of engine	No. 1 fuel injector	
C122	2	Middle of engine	No. 2 fuel injector	
C123	2	Middle of engine	No. 3 fuel injector	
C124	2	Middle of engine	No. 4 fuel injector	
C125	8	Left side of engine compartment	Junction connector	
C126	2	Left side of engine compartment	Engine compartment wire harness (C304)	
C127	14	Left side of engine compartment	Engine compartment wire harness (C305)	
C131	1	Right side of engine	VTEC solenoid valve	
C132	2	Right side of engine	VTEC oil pressure switch	
C133	2	Middle of engine	Knock sensor (KS)	
C134	2	Middle of engine	Intake air bypass (IAB) control solenoid valve	
T101		Left side of engine	Alternator	
T102		Right side of engine compartment	Under-hood fuse/relay box	
G101		Right side of engine	Engine ground, via engine wire harness	

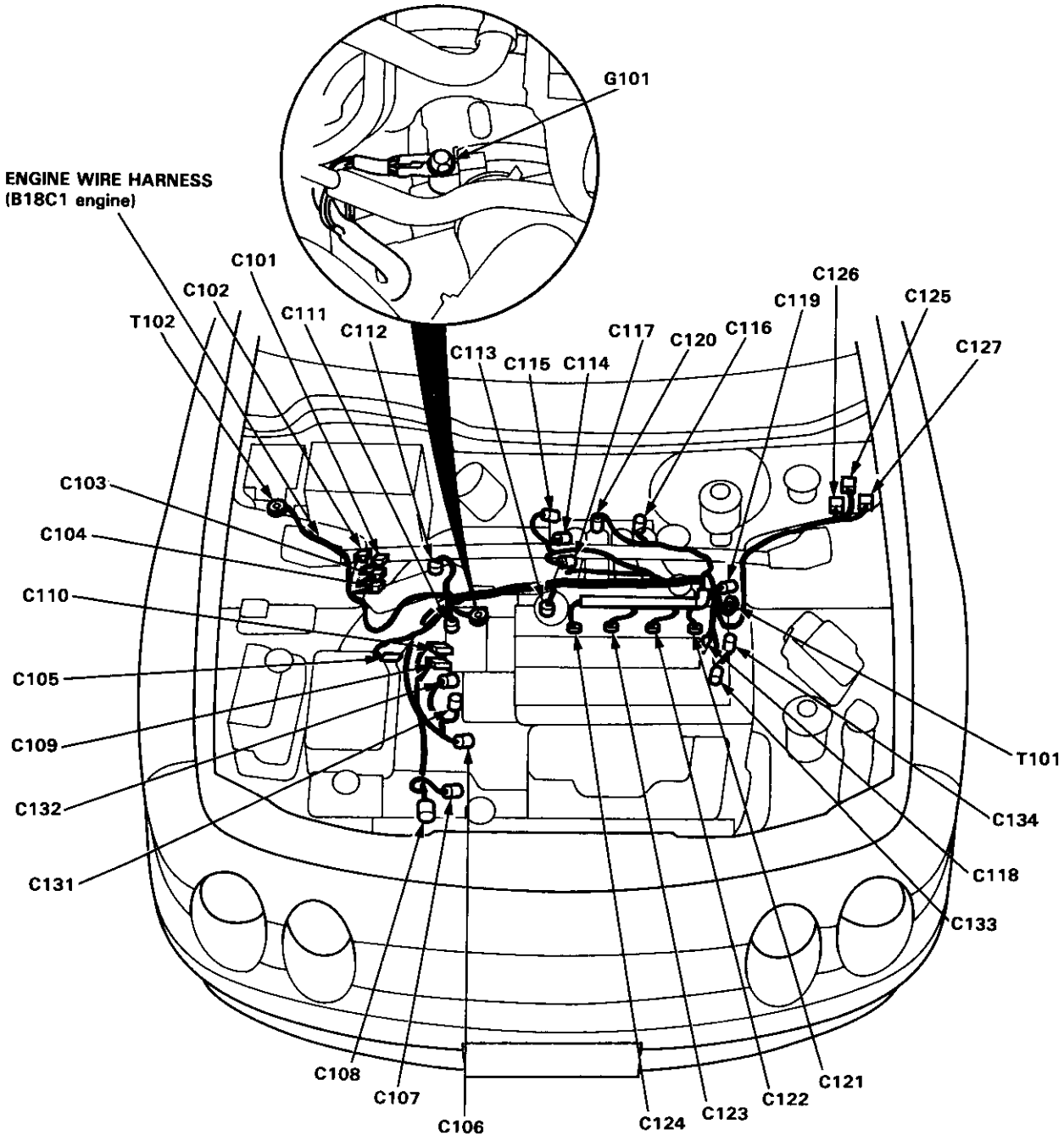
G101
ENGINE WIRE HARNESS
(B18C1 engine)
C101
C102
T102
C111
C112
C113
C115
C114
C117
C120
C116
C119
C126
C125
C127
C103
C104
C110
C105
C109
C132
C131
T101
C134
C118
C133
C108
C107
C106
C124
C123
C122
C121

ABS Modulator Unit Wire Harness

Connector or Terminal	Number of Cavities	Location	Connects to	Notes
C161	14	Right side of engine compartment	Main wire harness (C211)	
C162	2	ABS modulator unit	ABS pressure switch	
C163	2	ABS modulator unit	ABS right front solenoid (OUT)	
C164	2	ABS modulator unit	ABS right front solenoid (IN)	
C165	2	ABS modulator unit	ABS rear solenoid (OUT)	
C166	2	ABS modulator unit	ABS rear solenoid (IN)	
C167	2	ABS modulator unit	ABS left front solenoid (OUT)	
C168	2	ABS modulator unit	ABS left front solenoid (IN)	

Engine Compartment Wire Harness

Connector or Terminal	Number of Cavities	Location	Connects to	Notes
C301	20	Behind left kick panel	Main wire harness (C423)	
C302	20	Behind left kick panel	Main wire harness (C424)	
C303	1	Behind left kick panel	Front fog light system	Option
C304	2	Left side of engine compartment	Engine wire harness (C126)	
C305	14	Left side of engine compartment	Engine wire harness (C127)	
C306	2	Left side of engine compartment	Test tachometer connector	
C307	3	Left side of engine compartment	Daytime running lights resistor	Canada
C308	5	Left side of engine compartment	Windshield wiper motor	
C309	1	Left side of engine compartment	Brake fluid level sensor (+)	
C310	1	Left side of engine compartment	Brake fluid level sensor (−)	
C311	2	Middle of engine compartment	Power steering pressure (PSP) switch	USA
C312	2	Left side of engine compartment	Left front wheel sensor	ABS
C313	4	Left side of engine compartment	Cruise control actuator	
C314	2	Behind left headlight	Left headlight (Low beam)	
C315	2	Behind left headlight	Left headlight (High beam)	
C316	1	Behind left headlight	Front fog light system	Option
C317	2	Behind left corner of front bumper	Windshield washer motor	
C318	2	Behind left corner of front bumper	Rear window washer motor	
C319	2	Behind left corner of front bumper	Left front side marker light	
C320	3	Behind left corner of front bumper	Left front turn signal/parking lights	
G301		Left side of engine compartment	Body ground, via engine compartment wire harness	

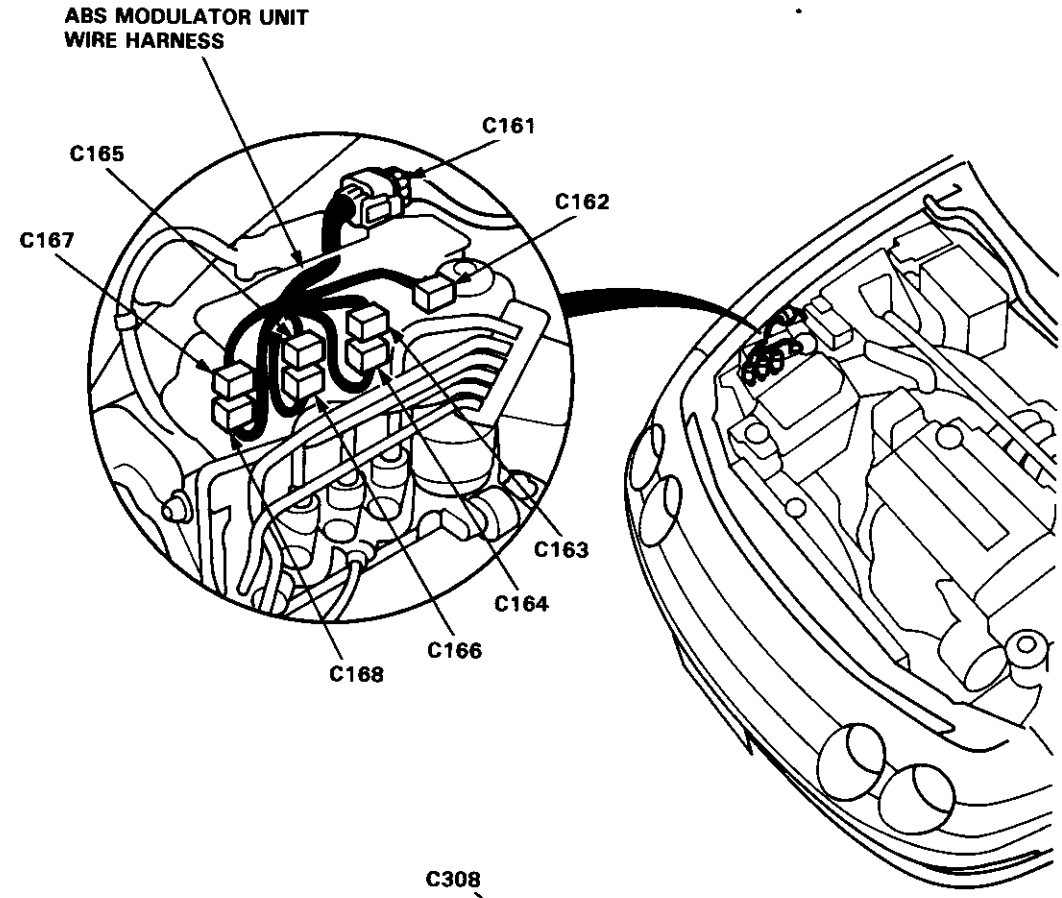
ABS MODULATOR UNIT
WIRE HARNESS
C161
C165
C162
C167
C163
C164
C166
C168

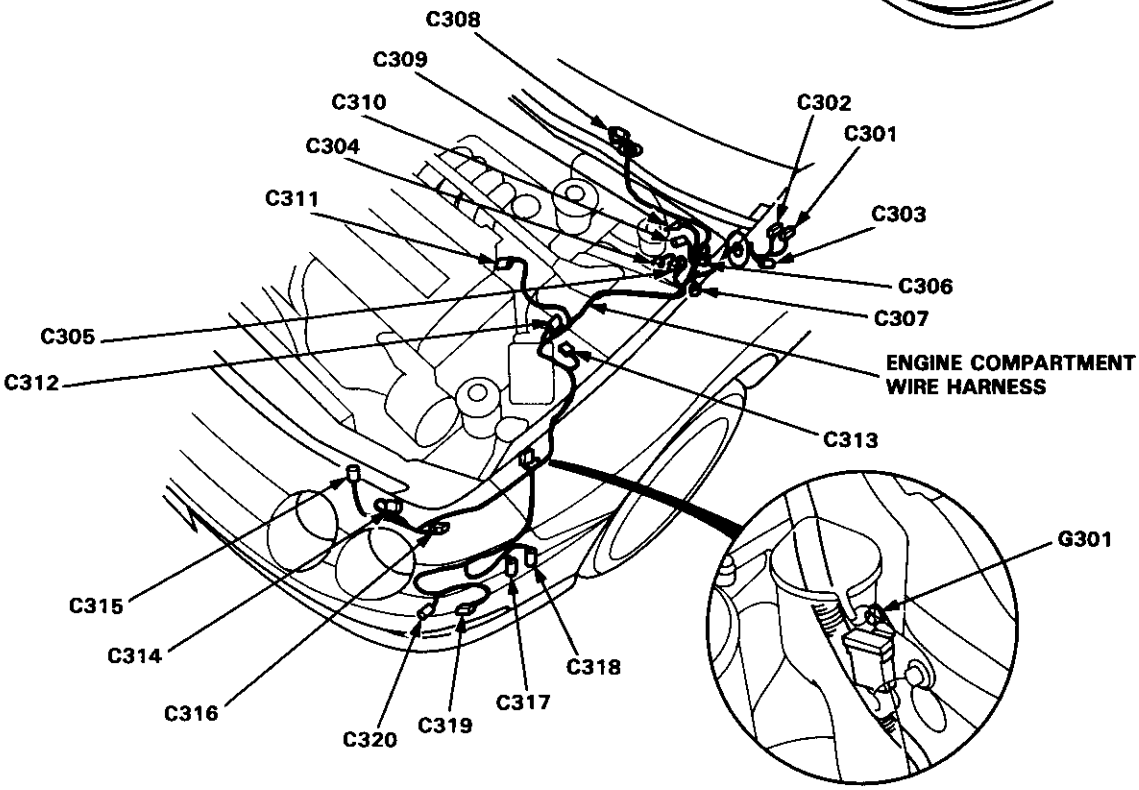
C308
C309
C310
C304
C311
C302
C301
C303
C306
C307
C305
C312
ENGINE COMPARTMENT
WIRE HARNESS
C313
G301
C315
C314
C316
C320
C319
C317
C318

Main Wire Harness (Under-hood branch)

Connector or Terminal	Number of Cavities	Location	Connects to	Notes
C201	2	Behind right side of front bumper	Horn	
C202	2	Behind right corner of front bumper	Right front turn signal/parking light	
C203	3	Behind right corner of front bumper	Right front side marker light	
C204	2	Behind right headlight	Right headlight (Low beam)	
C205	2	Behind right headlight	Right headlight (High beam)	
C206	2	Right side of engine compartment	Radiator fan motor	
C207	8	Right side of engine compartment	A/C wire harness (C151)	
C208	4	Right side of engine compartment	ABS front fail safe relay	
C209	4	Right side of engine compartment	ABS rear fail safe relay	
C210	2	Right side of engine compartment	ABS pump motor	
C211	14	Right side of engine compartment	ABS modulator unit wire harness (C161)	
C212	3	Right side of engine compartment	Under-hood ABS fuse/relay box (C901)	
C213	4	Right side of engine compartment	Under-hood ABS fuse/relay box (C902)	
C214	2	Right side of engine compartment	Under-hood fuse/relay box (C907)	
C215	3	Right side of engine compartment	Under-hood fuse/relay box (C909)	
C216	5	Right side of engine compartment	Under-hood fuse/relay box (C910)	
C217	7	Right side of engine compartment	Under-hood fuse/relay box (C908)	
C218	3	Right side of engine compartment	Under-hood fuse/relay box (C911)	
C219	2	Right side of engine compartment	Right front wheel sensor	ABS
C220	2	Right side of engine compartment	Engine wire harness (C104)	B18C1 engine
C220	6	Right side of engine compartment	Engine wire harness (C104)	B18B1 engine
C221	4	Right side of engine compartment	Engine wire harness (C101)	
C222	10	Right side of engine compartment	Engine wire harness (C102)	
C223	14	Right side of engine compartment	Engine wire harness (C103)	
G201		Right side of engine compartment	Body ground, via main wire harness	
G202		Right side of engine compartment	Body ground, via main wire harness	ABS

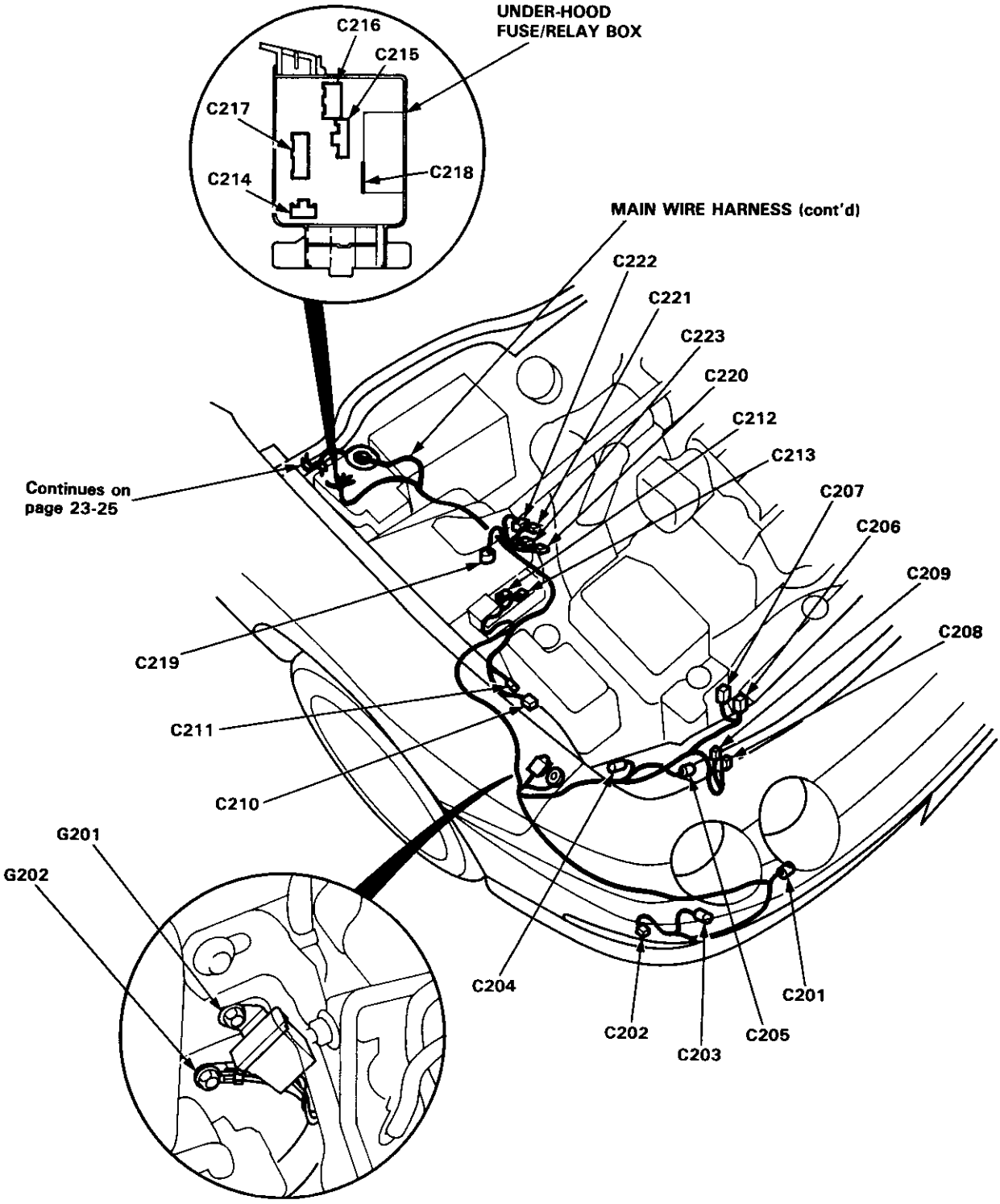
UNDER-HOOD
FUSE/RELAY BOX
C216
C215
C217
C214
C218
MAIN WIRE HARNESS (cont'd)
C222
C221
C223
C220
C212
C213
C207
C206
C209
C208
Continues on
page 23-25
C219
C211
C210
G201
G202
C204
C202
C203
C205
C201

Main Wire Harness (Right branch)

Connector or Terminal	Number of Cavities	Location	Connects to	Notes
C401	25	Front Passenger's door	Front passenger's door wire harness (C626)	
C402	3	Under right side of dash	A/C diode	
C403	2	Under right side of dash	Heater sub-harness A (C672)	
C404	10	Under right side of dash	Heater sub-harness A (C671)	
C405	2	Under right side of dash	SCS short connector	
C406	3	Under right side of dash	Data link connector (DLC)	
C407	22	Behind right kick panel	ABS sub-harness (C701)	
C408	16	Behind right kick panel	Engine control module (ECM)	
C409	22	Behind right kick panel	Engine control module (ECM)	
C410	26	Behind right kick panel	Engine control module (ECM)	

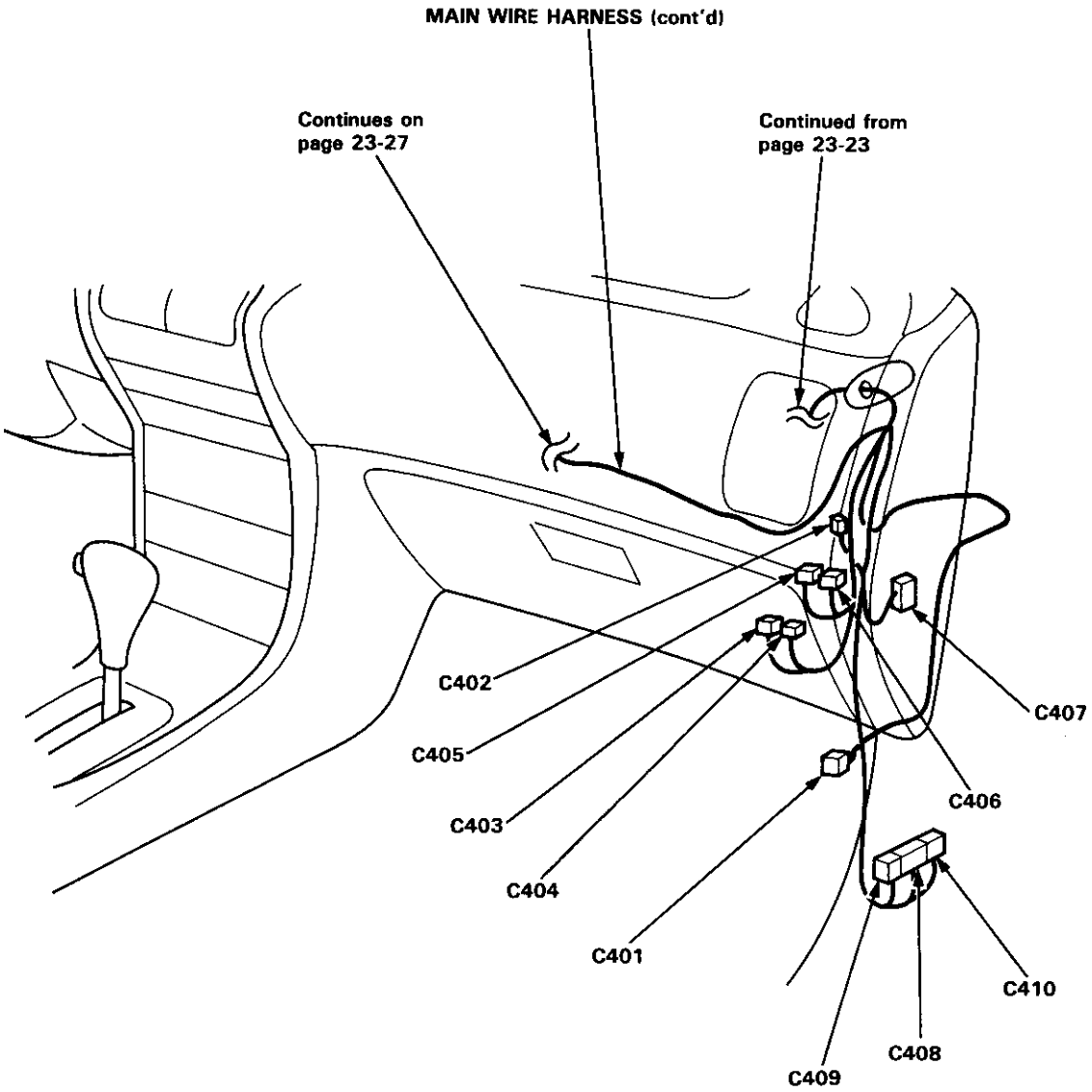
MAIN WIRE HARNESS (cont'd)
Continues on page 23-27
Continued from page 23-23
C402
C405
C403
C404
C401
C407
C406
C410
C408
C409

Main Wire Harness (Left branch)

Connector or Terminal	Number of Cavities	Location	Connects to	Notes
C411	2	Center floor	A/T gear position console light	A/T
C412	2	Center floor	Shift lock solenoid	A/T
C413	14	Center floor	A/T gear position switch	A/T
C414	8	Under left side of dash	Interlock control unit	A/T
C415	4	Behind left kick panel	Daytime running lights control unit	Canada
C416	8	Behind left kick panel	Daytime running lights control unit	Canada
C417	14	Behind left kick panel	Cruise control unit	
C418	20	Behind left kick panel	Junction connector	
C419	22	Behind left kick panel	Transmission control module (TCM)	A/T
C420	26	Behind left kick panel	Transmission control module (TCM)	A/T
C421	10	Behind left kick panel	Rear wire harness (C501)	
C422	14	Behind left kick panel	Rear wire harness (C502)	
C423	20	Under left side of dash	Engine compartment wire harness (C301)	
C424	20	Under left side of dash	Engine compartment wire harness (C302)	
C425	2	Under left side of dash	Roof wire harness (C663)	
C426	14	Under left side of dash	Security system (Option)	Canada
C427	4	Under left side of dash	SRS main harness (C802)	
C428	2	Under left side of dash	Clutch interlock switch	M/T
C429	2	Under left side of dash	Clutch switch (Cruise control)	M/T
C430	10	Under left side of dash	Dashboard wire harness (C552)	A/T
C431	2	Under left side of dash	Brake switch (Without cruise control)	
C431	4	Under left side of dash	Brake switch (With cruise control)	
C432	7	Under left side of dash	Ignition switch	
C433	2	Under left side of dash	Security system (Option)	Canada
C434	4	Under left side of dash	Combination light switch	
C435	6	Under left side of dash	Combination light switch	
C436	7	Under left side of dash	Combination light switch	
C437	8	Under left side of dash	Combination light switch	
C438	5	Behind dashboard lower cover	Under-dash fuse/relay box (C913)	
C439	7	Behind dashboard lower cover	Under-dash fuse/relay box (C916)	
C440	22	Behind dashboard lower cover	Under-dash fuse/relay box (C917)	
C441	6	Under left side of dash	Security system (Option)	Canada
C442	4	Under left side of dash	Security system (Option)	Canada
C443	7	Under left side of dash	PGM-FI main relay	
C444	4	Under left side of dash	Starter cut relay	M/T
C445	4	Under left side of dash	Rear window defogger relay	
C446	15	Behind under-dash fuse/relay box	Integrated control unit	
C447	3	Under left side of dash	Security system (Option)	Canada
C448	4	Behind dashboard lower cover	Horn relay	
C449	16	Behind dashboard lower cover	Dashboard wire harness (C553)	
G401		Behind left kick panel	Body ground, via main wire harness	

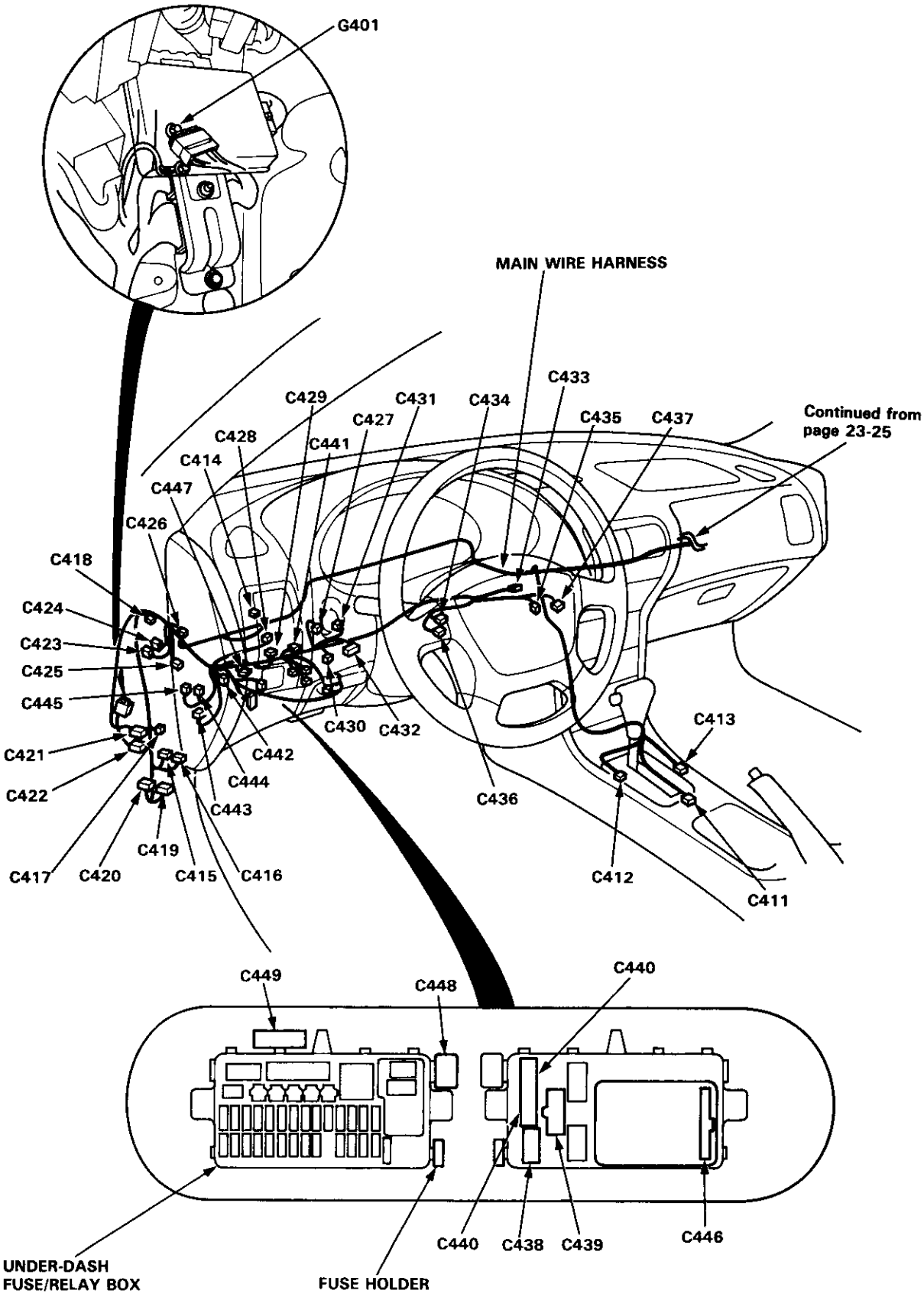
G401
MAIN WIRE HARNESS
C433
C429
C431
C434
C427
C435
C437
Continued from page 23-25
C428
C441
C414
C447
C426
C418
C424
C423
C425
C445
C430
C432
C413
C421
C442
C422
C444
C443
C436
C419
C417
C420
C415
C416
C412
C411
C449
C448
C440
C440
C438
C439
C446
UNDER-DASH FUSE/RELAY BOX
FUSE HOLDER

Rear Wire Harness (Hatchback)

Connector or Terminal	Number of Cavities	Location	Connects to	Notes
C501	10	Behind left kick panel	Main wire harness (C421)	
C502	14	Behind left kick panel	Main wire harness (C422)	
C503	10	Behind dashboard lower cover	Under-dash fuse/relay box (C912)	
C504	12	Behind dashboard lower cover	Under-dash fuse/relay box (C915)	
C505	12	Behind dashboard lower cover	Dashboard wire harness (C554)	
C506	25	Driver's door	Driver's door wire harness (C601)	
C507	2	Center floor	Driver's seat belt switch	
C508	1	Center floor	Parking brake switch	
C509	1	Left quarter panel	Driver's door switch	
C510	2	Fuel tank	Fuel pump	
C511	3	Fuel tank	Fuel gauge sending unit	
C512	1	Right quarter panel	Passenger's door switch	
C513	2	Right quarter panel	Right rear speaker	
C514	2	Left quarter panel	Left rear speaker	
C515	2	Left quarter panel	Noise condenser	
C516	20	Left quarter panel	Connector C517	
C517	20	Left quarter panel	Connector C516	
C518	3	Left side corner of cargo area	Power antenna motor	
C519	2	Left side corner of cargo area	Cargo area light	
C520	6	Left side corner of cargo area	Trailer lighting connector	
C521	6	Left rear corner of cargo area	Left taillight	
C522	2	Center of cargo area bulkhead	License plate lights	
C523	6	Right rear corner of cargo area	Right taillight	
C524	2	Center of cargo area bulkhead	Tailgate latch switch	
C525	2	Right side of cargo area	Tailgate wire harness (C752)	
C526	4	Right side of cargo area	Tailgate wire harness (C751)	
G501		Behind left kick panel	Body ground, via rear wire harness	
G502		Left side of floor	Body ground, via rear wire harness	
G503		Center of cargo area bulkhead	Body ground, via rear wire harness	

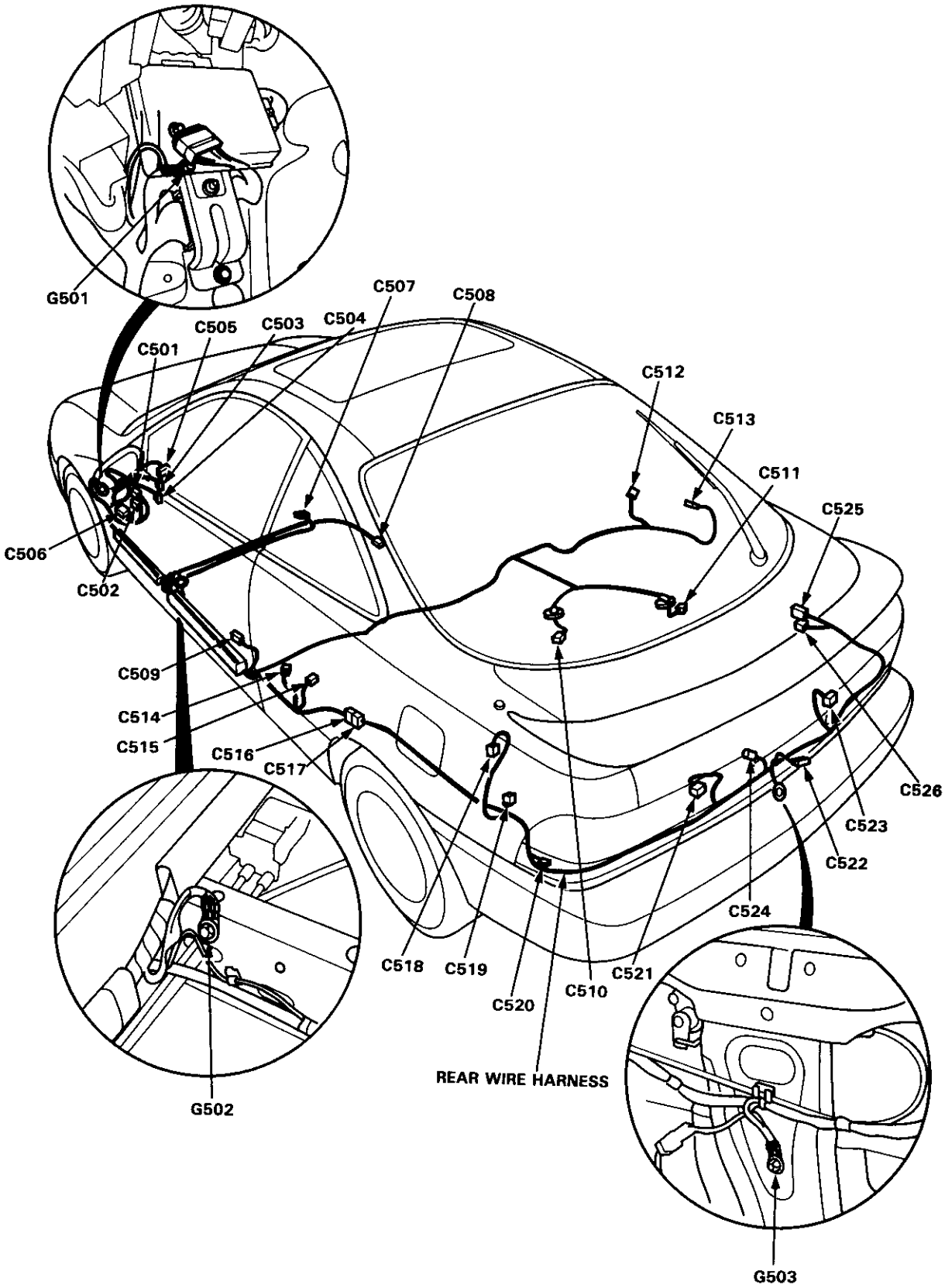
G501
C507
C508
C505
C503
C504
C501
C512
C513
C511
C525
C506
C502
C509
C514
C515
C516
C517
C526
C523
C522
C524
C518
C519
C521
C510
C520
REAR WIRE HARNESS
G502
G503

Rear Wire Harness (Sedan)

Connector or Terminal	Number of Cavities	Location	Connects to	Notes
C501	10	Behind left kick panel	Main wire harness (C421)	
C502	14	Behind left kick panel	Main wire harness (C422)	
C503	10	Behind dashboard lower cover	Under-dash fuse/relay box (C912)	
C504	12	Behind dashboard lower cover	Under-dash fuse/relay box (C915)	
C505	12	Behind dashboard lower cover	Dashboard wire harness (C554)	
C506	25	Driver's door	Driver's door wire harness (C601)	
C507	2	Center floor	Driver's seat belt switch	
C508	1	Center floor	Parking brake switch	
C509	1	Left B-pillar	Driver's door switch	
C510	2	Fuel tank	Fuel pump	
C511	3	Fuel tank	Fuel gauge sending unit	
C512	1	Right B-pillar	Front passenger's door switch	
C513	2	Above right side of trunk	Right rear speaker	
C514	2	Above left side of trunk	Left rear speaker	
C515	2	Left quarter panel	Noise condenser	
C516	20	Left quarter panel	Connector C517	
C517	20	Left quarter panel	Connector C516	
C518	3	Left side corner of trunk	Power antenna motor	
C519	2	Above center of trunk	Trunk light	
C520	6	Left side corner of trunk	Trailer lighting connector	
C521	4	Left rear corner of trunk	Left outer taillight	
C522	2	Right rear corner of trunk	License plate lights	
C523	4	Right rear corner of trunk	Right outer taillight	
C527	6	Left rear door	Left rear door wire harness (C651)	
C528	6	Right rear door	Right rear door wire harness (C656)	
C529	1	Left quarter panel	Left rear door switch	
C530	1	Left side of rear window	Rear window defogger (+)	
C531	2	Above right side of trunk	High mount brake light	
C532	1	Right quarter panel	Right rear door switch	
C533	1	Right side of rear window	Rear window defogger (−)	
C534	4	Left side of trunk lid	Left inner taillight	
C535	2	Center of trunk lid	Trunk latch switch	
C536	4	Right side of trunk lid	Right inner taillight	
G501		Behind left kick panel	Body ground, via rear wire harness	
G502		Left side of floor	Body ground, via rear wire harness	
G503		Above center of trunk	Body ground, via rear wire harness	

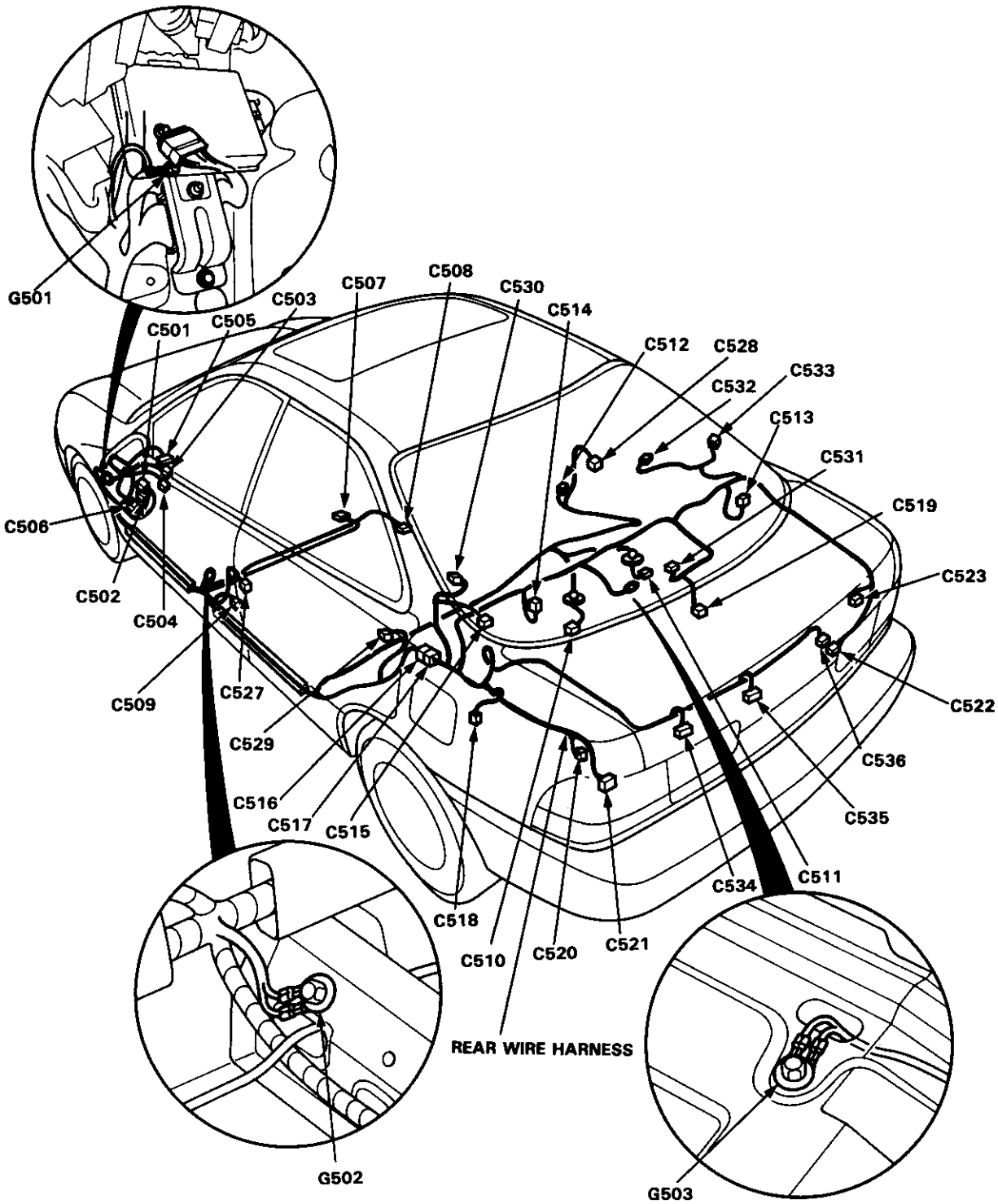
G501
C507
C508
C530
C503
C514
C501
C505
C512
C528
C533
C532
C513
C531
C506
C519
C523
C502
C504
C509
C527
C522
C529
C536
C516
C535
C517
C515
C534
C511
C518
C510
C520
C521
REAR WIRE HARNESS
G502
G503

Dashboard Wire Harness

Connector or Terminal	Number of Cavities	Location	Connects to	Notes
C551	20	Behind dashboard lower cover	Under-dash fuse/relay box (C919)	
C552	10	Behind dashboard lower cover	Main wire harness (C430)	A/T
C553	16	Behind dashboard lower cover	Main wire harness (C449)	
C554	12	Behind dashboard lower cover	Rear wire harness (C505)	
C555	5	Under left side of dash	Cruise main switch	
C556	22	Under left side of dash	Junction connector	
C557	5	Behind gauges	Gauge assembly	
C558	10	Behind gauges	Gauge assembly	
C559	13	Behind gauges	Gauge assembly	
C560	16	Behind gauges	Gauge assembly	
C561	4	Behind middle of dash	Clock	
C562	3	Left side of dash	Dash lights brightness controller	
C563	10	Behind middle of dash	Hazard warning switch	
C564	6	Behind middle of dash	Rear window defogger switch	
C565	2	Right side of dash	Glove box light	
C566	16	Under middle of dash	Stereo radio/cassette player	
C567	2	Under middle of dash	Chime	
C568	5	Behind dashboard lower cover	Maintenance reminder unit	
C569	4	Under middle of dash	Cigarette lighter	
G551		Under middle of dash	Body ground, via dashboard wire harness	

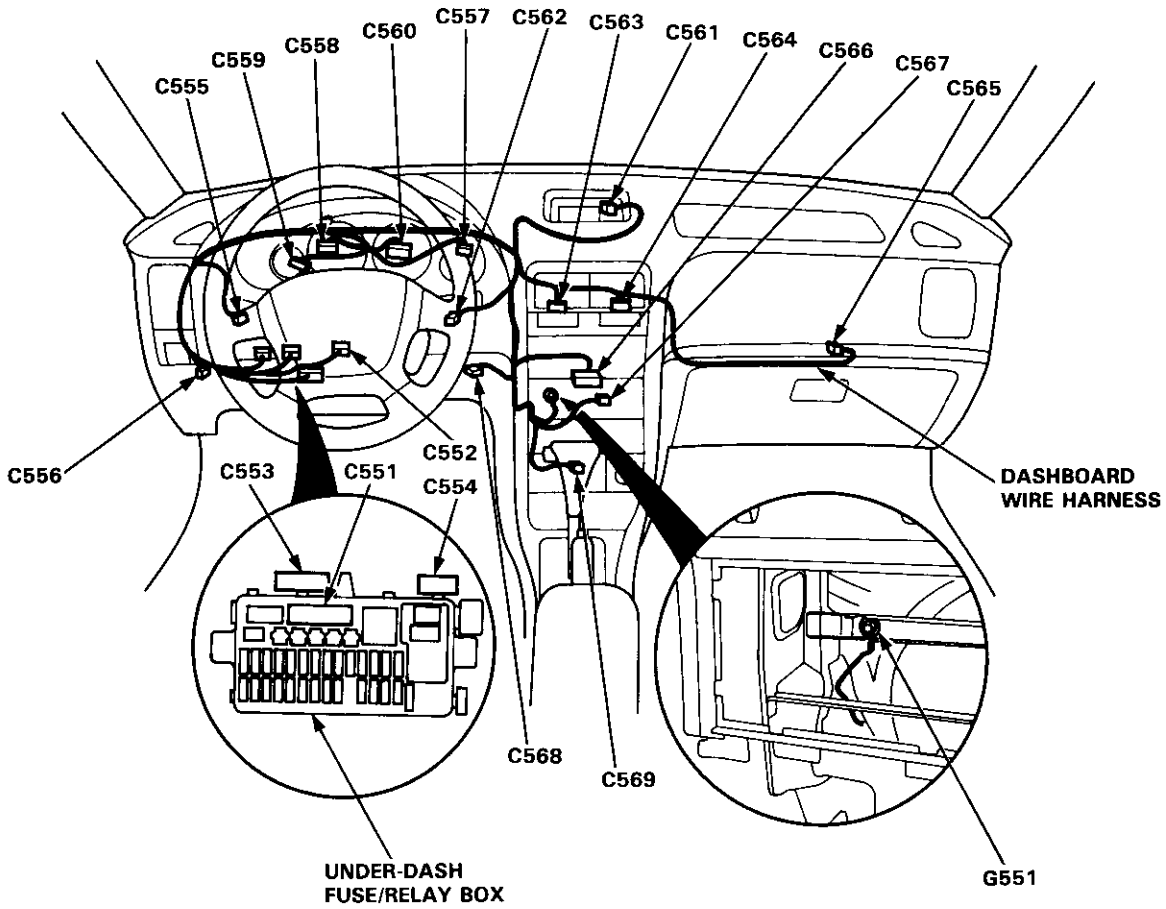
C555
C559
C558
C560
C557
C562
C563
C561
C564
C566
C567
C565
C556
C553
C551
C552
C554
DASHBOARD
WIRE HARNESS
C568
C569
UNDER-DASH
FUSE/RELAY BOX
G551

Driver's Door Wire Harness

Connector or Terminal	Number of Cavities	Location	Connects to	Notes
C601	25	Driver's door	Driver's door wire harness (C506)	
C602	2	Driver's door	Driver's door speaker	
C603	4	Driver's door	Driver's power window motor	
C604	14	Driver's door	Power door lock control unit	
C605	8	Behind mirror panel	Left power mirror	Hatchback
C605	8	Driver's door	Left power mirror	Sedan
C606	2	Driver's door	Left tweeter	B18C1 engine
C607	3	Driver's door	Driver's door lock switch	
C608	10	Driver's door	Power mirror switch	
C609	10	Driver's door	Power window master switch	
C610	6	Driver's door	Driver's door lock actuator assembly	
C611	2	Driver's door	Driver's key cylinder switch	
C612	1	Driver's door	Power window master switch	Sedan

Hatchback:

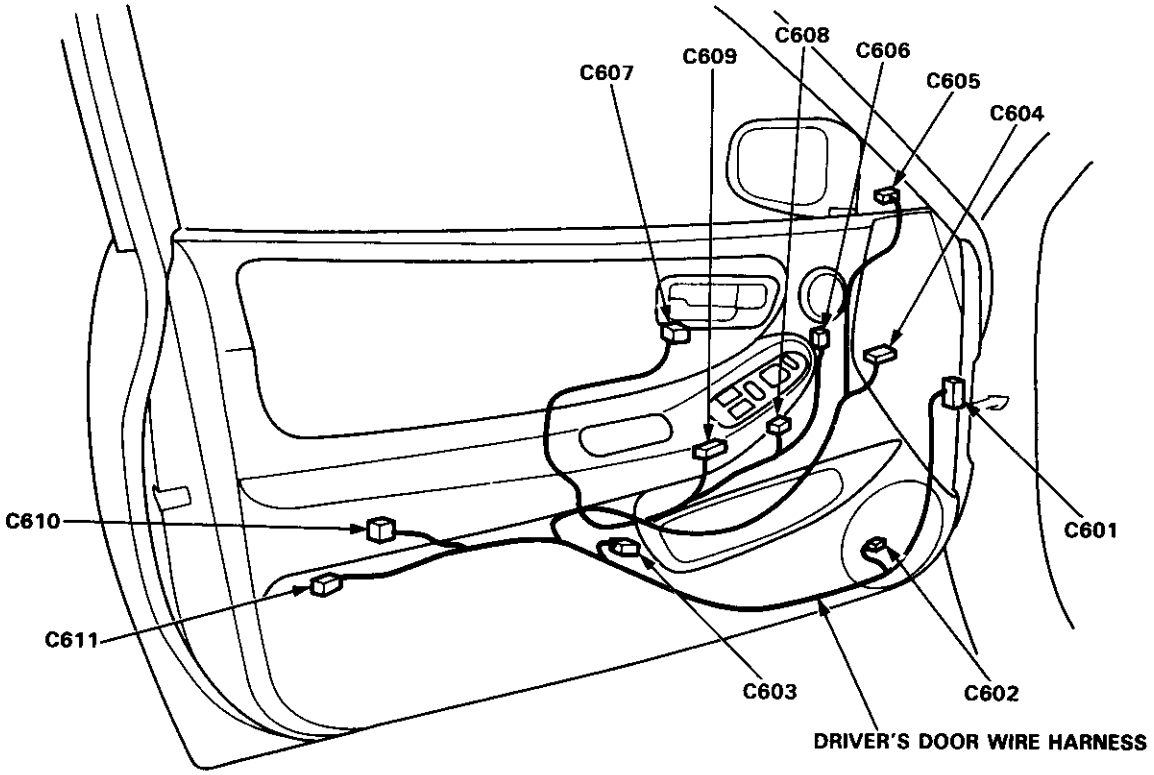

Sedan:

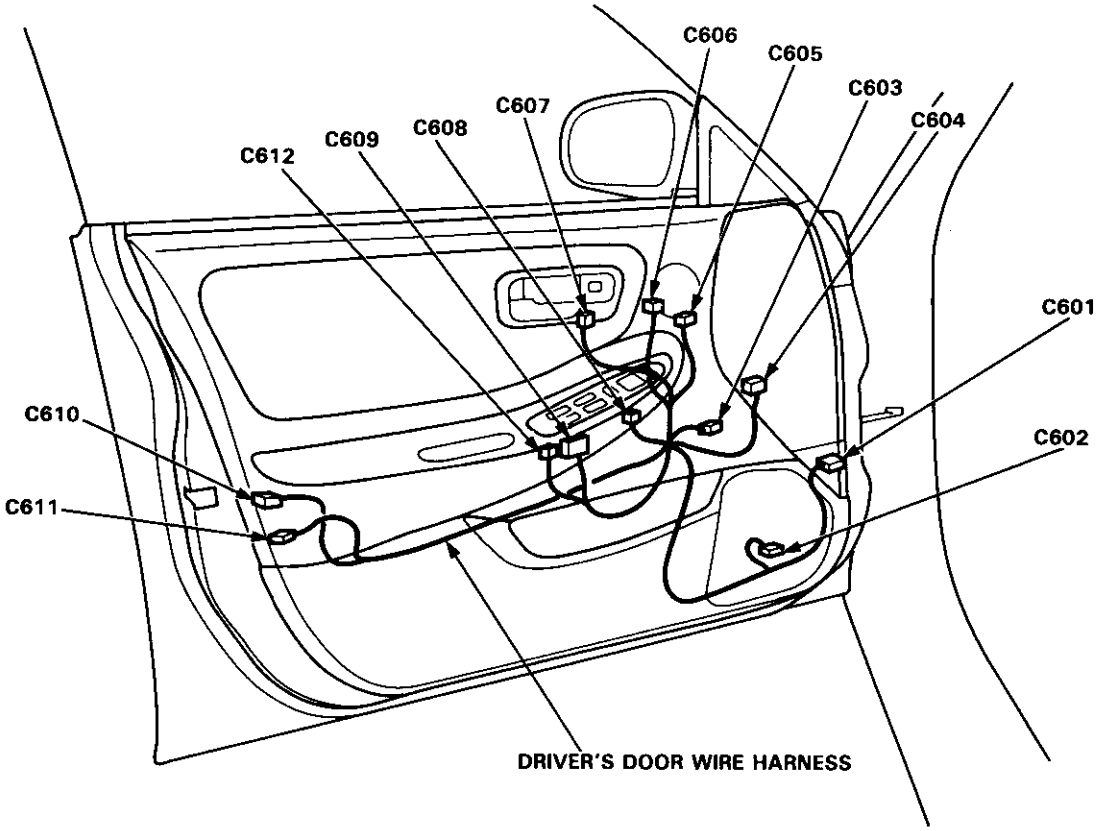

Front Passenger's Door Wire Harness

Connector or Terminal	Number of Cavities	Location	Connects to	Notes
C626	25	Front passenger's door	Main wire harness (C401)	
C627	2	Front passenger's door	Front passenger's door speaker	
C628	2	Front passenger's door	Front passenger's power window motor	
C629	8	Behind cover panel	Right power mirror	Hatchback
C629	8	Front passenger's door	Right power mirror	Sedan
C630	2	Front passenger's door	Right tweeter	B18C1 engine
C631	3	Front passenger's door	Front passenger's door lock switch	
C632	5	Front passenger's door	Front passenger's power window switch	
C633	2	Front passenger's door	Front passenger's door lock actuator	
C634	3	Front passenger's door	Front passenger's door key cylinder switch	

Hatchback:

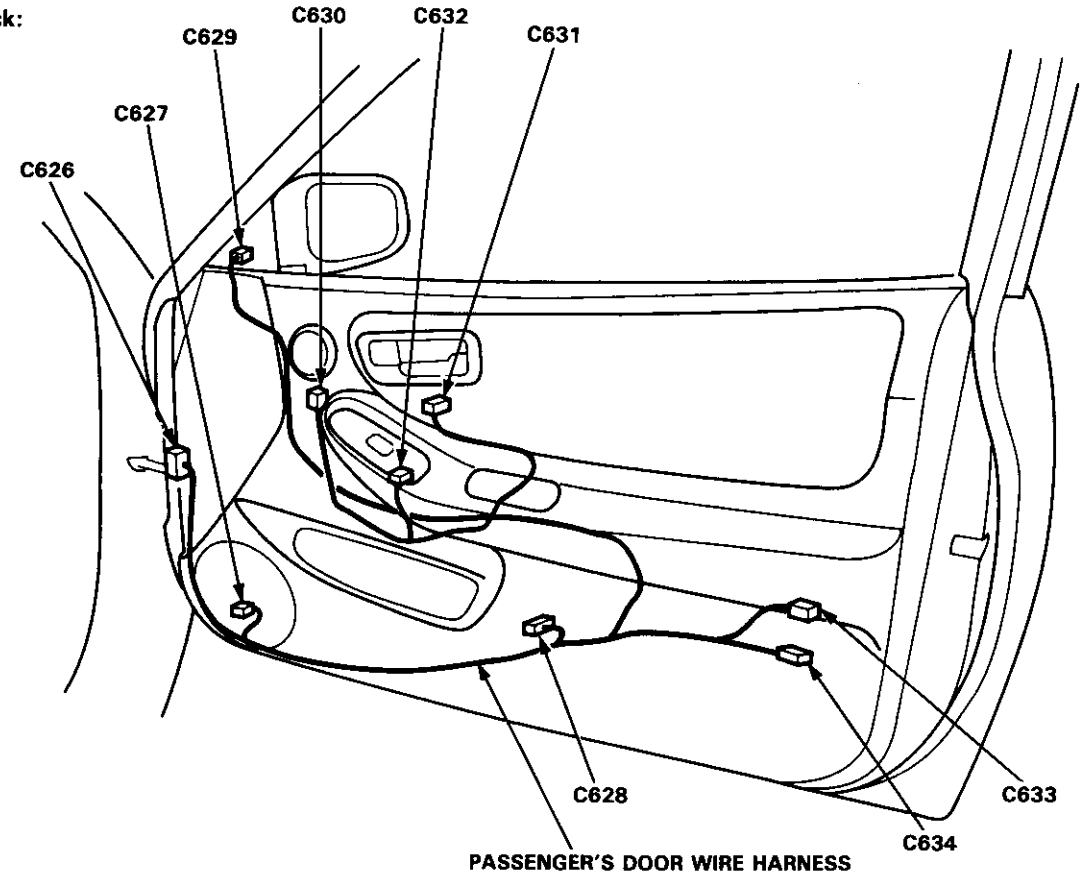

Sedan:

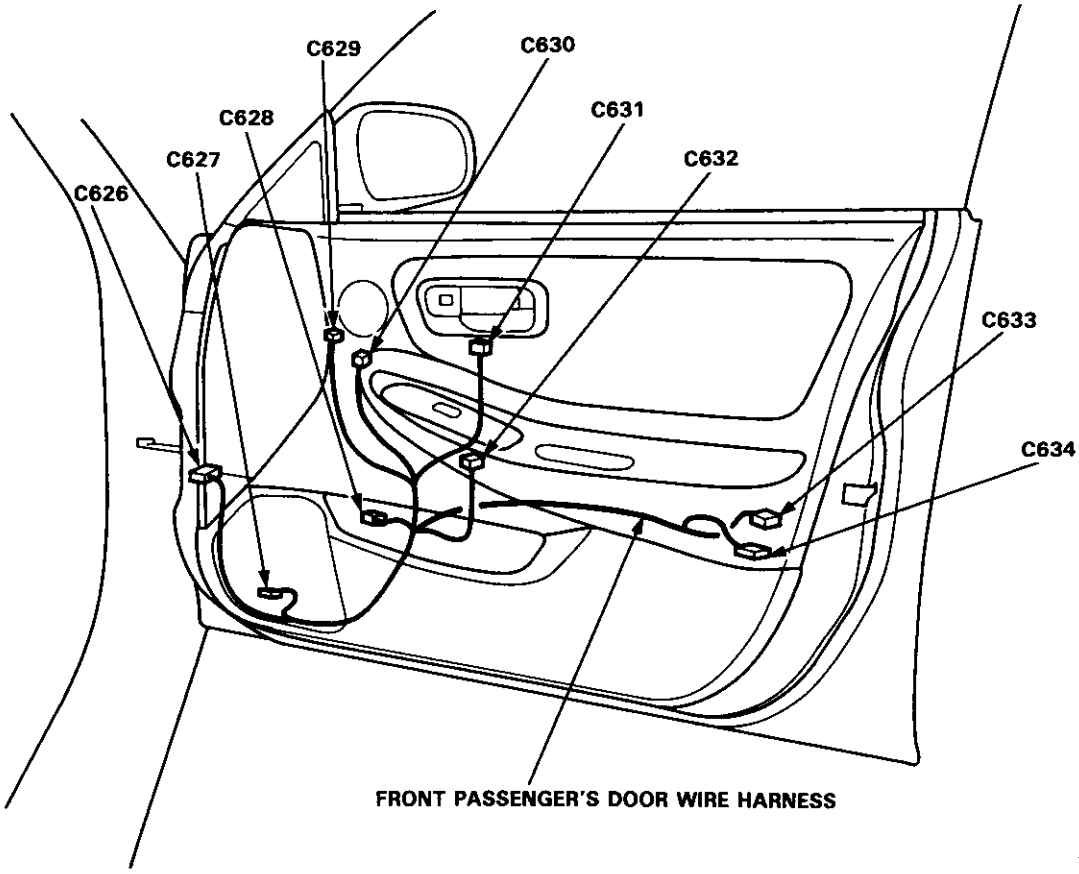

Left Rear Door Wire Harness (Sedan)

Connector or Terminal	Number of Cavities	Location	Connects to	Notes
C651	6	Left rear door	Rear wire harness (C527)	
C652	2	Left rear door	Left rear power window motor	
C653	5	Left rear door	Left rear power window switch	
C654	2	Left rear door	Left rear power window actuator	

Right Rear Door Wire Harness (Sedan)

Connector or Terminal	Number of Cavities	Location	Connects to	Notes
C656	6	Right rear door	Rear wire harness (C528)	
C657	2	Right rear door	Right rear power window motor	
C658	5	Right rear door	Right rear power window switch	
C659	2	Right rear door	Right rear power window actuator	

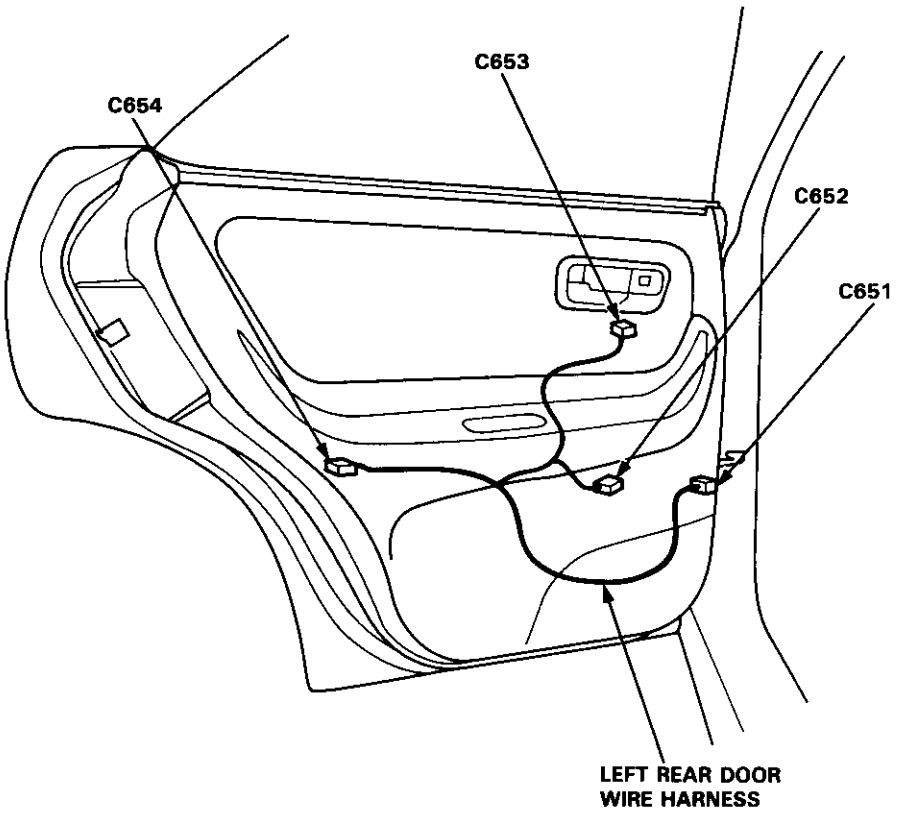
C653
C654
C652
C651
LEFT REAR DOOR
WIRE HARNESS

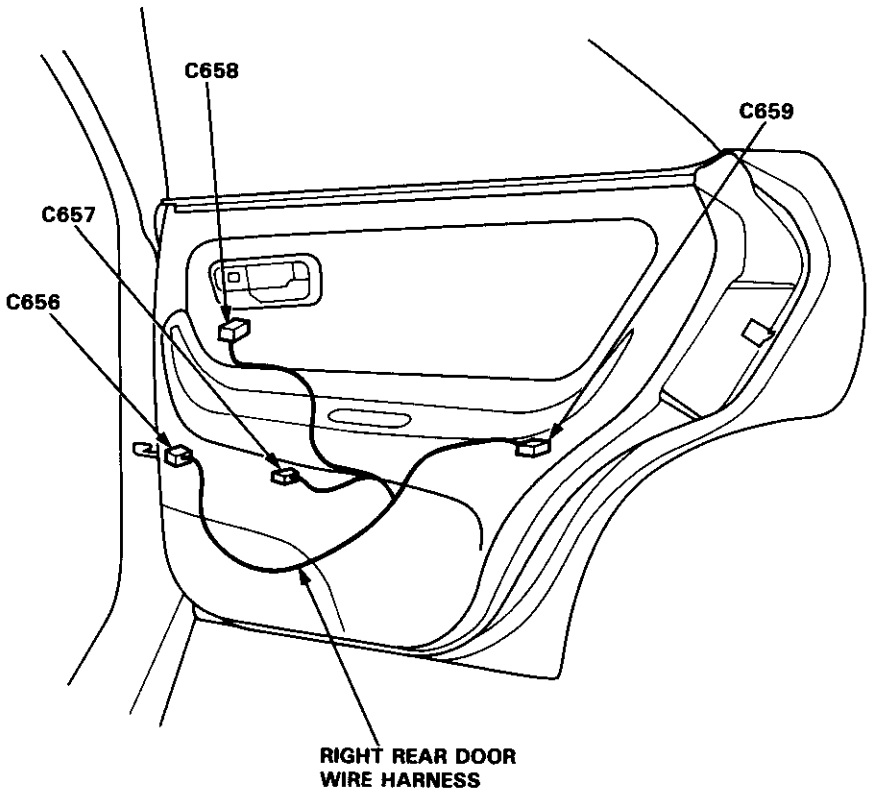
C658
C659
C657
C656
RIGHT REAR DOOR
WIRE HARNESS

Roof Wire Harness

Connector or Terminal	Number of Cavities	Location	Connects to	Notes
C661	3	Behind left kick panel	Under-dash fuse/relay box (C918)	With moonroof
C662	4	Behind left kick panel	Moonroof relay	With moonroof
C663	2	Behind left kick panel	Main wire harness (C425)	
C664	4	Left side of dashboard	Moonroof switch	With moonroof
C665	2	Roof	Moonroof motor	With moonroof
C666	1	Roof	Spotlight	With moonroof
C667	3	Roof	Ceiling light	

Hatchback:

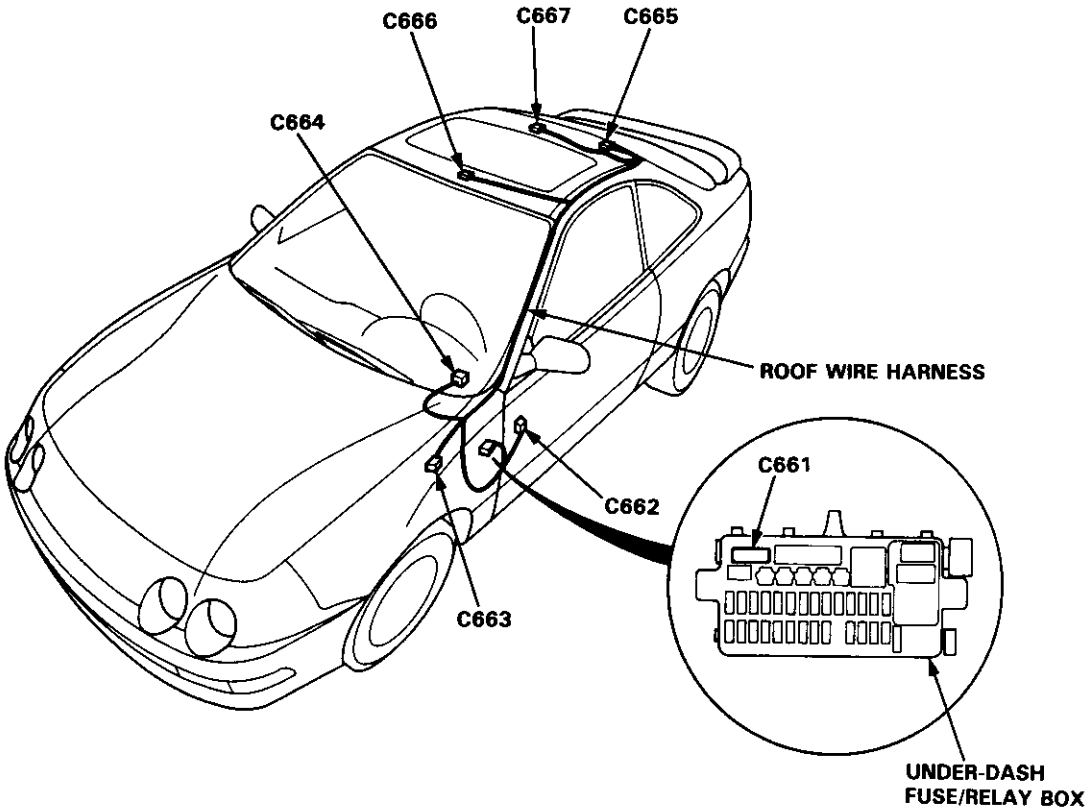

Sedan:

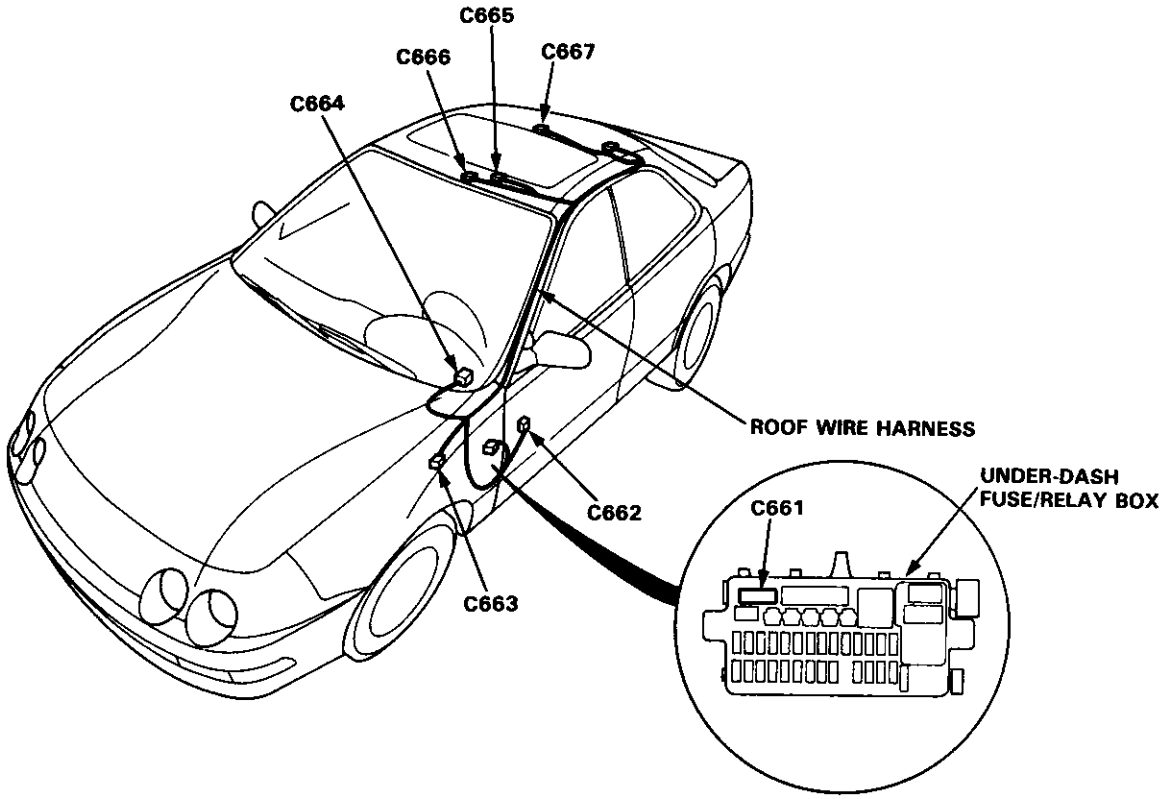

ABS Sub-harness

Connector or Terminal	Number of Cavities	Location	Connects to	Notes
C701	22	Behind right kick panel	Main wire harness (C407)	
C702	6	Right side of floor	ABS maintenance connector	
C703	26	Right quarter panel	ABS control unit	
C704	22	Right quarter panel	ABS control unit	
C705	2	Right side of cargo area	ABS right wheel sensor	Hatchback
C705	2	Right side of trunk	ABS right wheel sensor	Sedan
C706	2	Left side of cargo area	ABS left wheel sensor	Hatchback
C706	2	Left side of trunk	ABS left wheel sensor	Sedan
G701		Right quarter panel	Body ground, via ABS sub-harness	
G702		Right quarter panel	Body ground, via ABS sub-harness	

Hatchback:

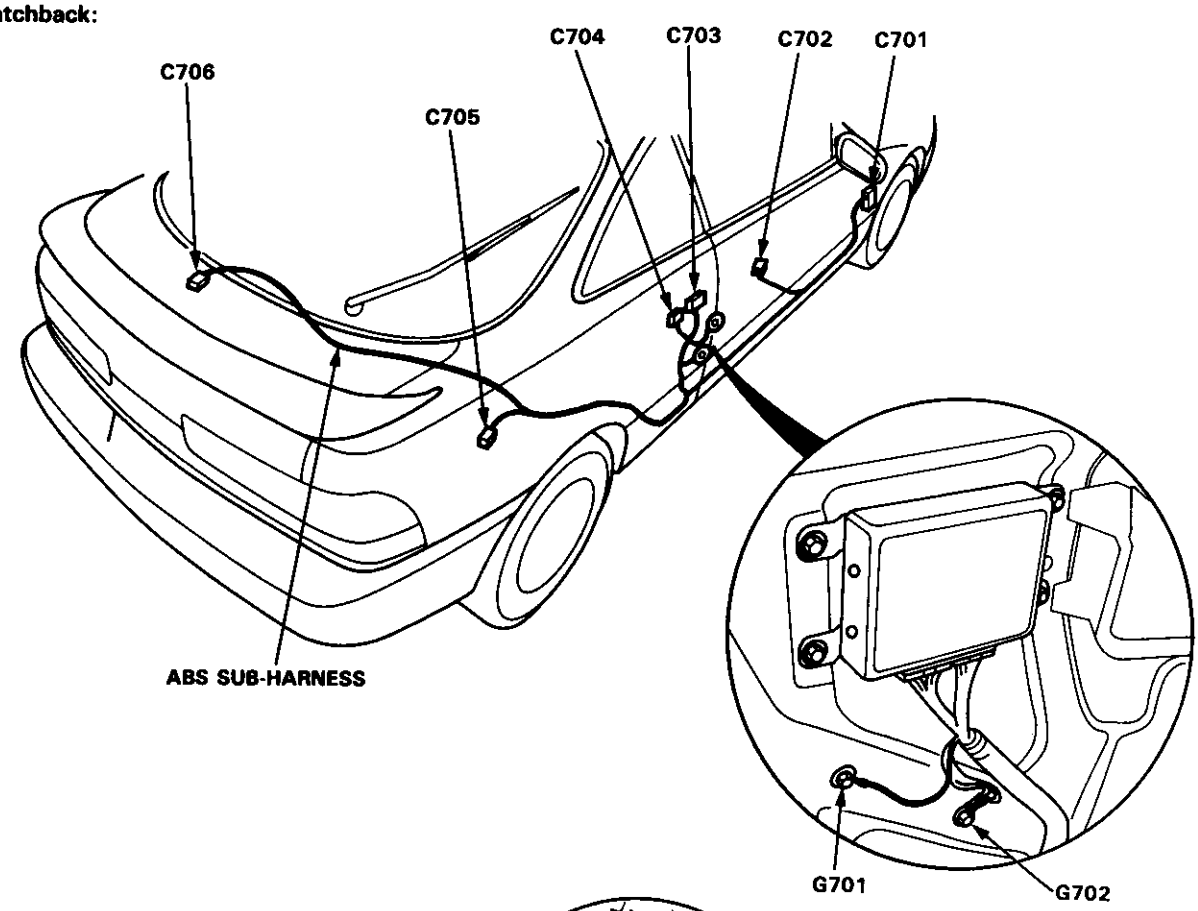

Sedan:

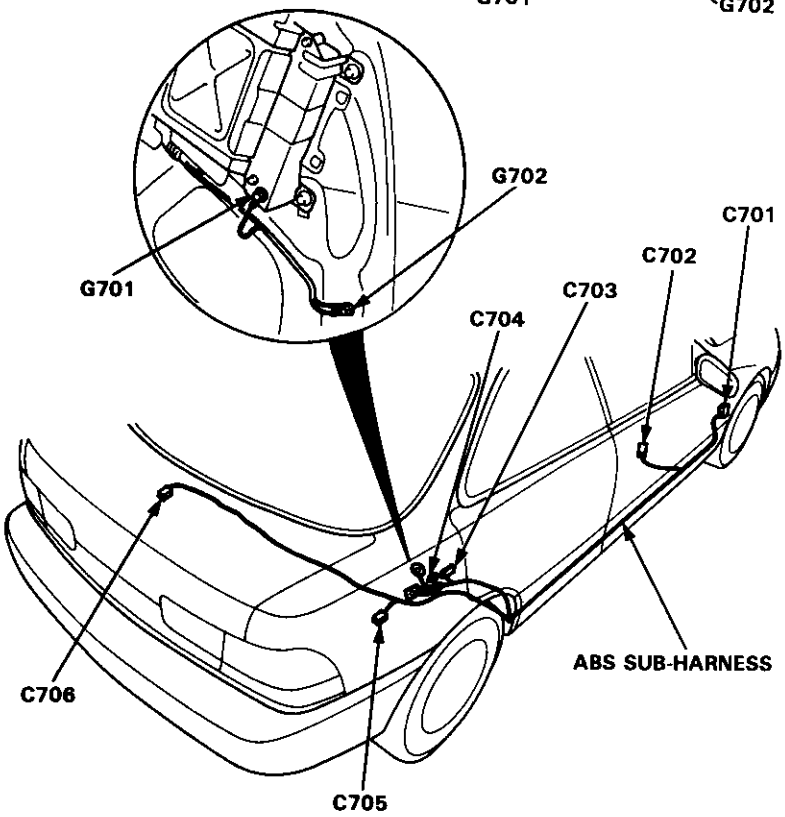

Hatch Wire Harness (Hatchback)

Connector or Terminal	Number of Cavities	Location	Connects to	Notes
C751	4	Right side of cargo area	Rear wire harness (C526)	
C752	2	Right side of cargo area	Rear wire harness (C525)	
C753	1	Right side of rear window	Rear window defogger (+)	
C754	2	Right side of hatch	Spoiler sub-harness (C761)	B18C1 engine
C755	4	Middle of hatch	Rear window wiper motor	
C756	2	Middle of hatch	High mount brake light	B18B1 engine
G751		Right side of hatch	Body ground, via hatch wire harness	

Spoiler Sub-harness (Hatchback with B18C engine)

Connector or Terminal	Number of Cavities	Location	Connects to	Notes
C761	2	Right side of hatch	Hatch wire harness (C754)	
C762	1	Middle of hatch	High mount brake light (+)	
C763	1	Middle of hatch	High mount brake light (−)	

Rear Window Defogger Ground Wire (Hatchback)

Connector or Terminal	Number of Cavities	Location	Connects to	Notes
C771	1	Left side of rear window	Rear window defogger (−)	
G771		Left side of rear window	Body ground, via rear window defogger ground wire	

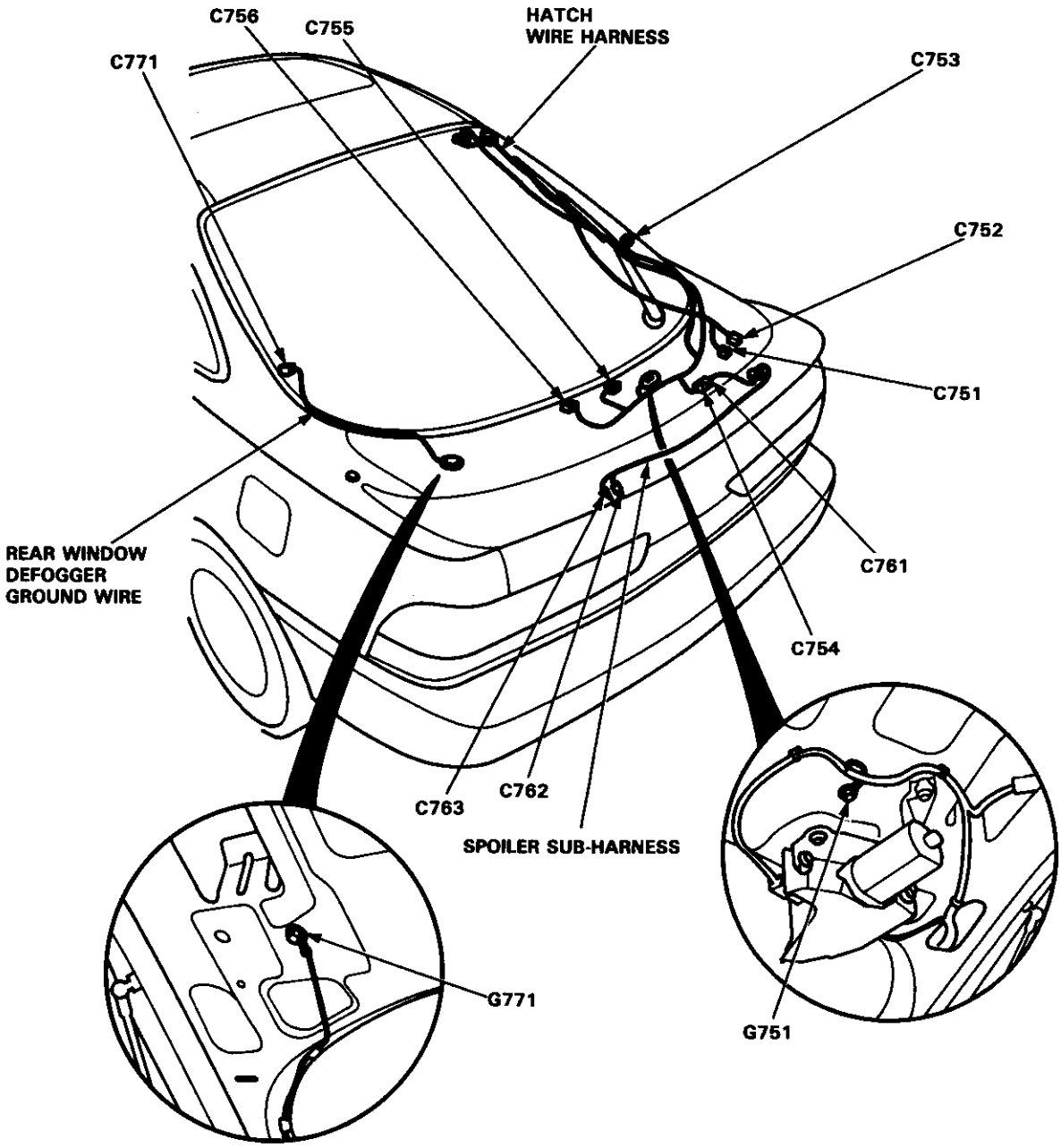
C756
C755
HATCH
WIRE HARNESS
C771
C753
C752
C751
REAR WINDOW
DEFOGGER
GROUND WIRE
C761
C754
C763
C762
SPOILER SUB-HARNESS
G771
G751

Heater Sub-harness A

Connector or Terminal	Number of Cavities	Location	Connects to	Notes
C671	10	Under right side of dash	Main wire harness (C404)	
C672	2	Under right side of dash	Main wire harness (C403)	
C673	2	Under right side of dash	Blower motor	
C674	4	Behind glove box	Blower resistor	
C675	4	Behind glove box	Recirculation control motor	
C676	3	Behind glove box	A/C thermostat	
C677	14	Behind middle of dash	Heater sub-harness B (C681)	

Heater Sub-harness B

Connector or Terminal	Number of Cavities	Location	Connects to	Notes
C681	14	Behind middle of dash	Heater sub-harness A (C677)	
C682	8	Middle of floor	Mode control motor	
C683	6	Behind middle of dash	Heater fan switch	
C684	14	Behind middle of dash	Heater control panel	

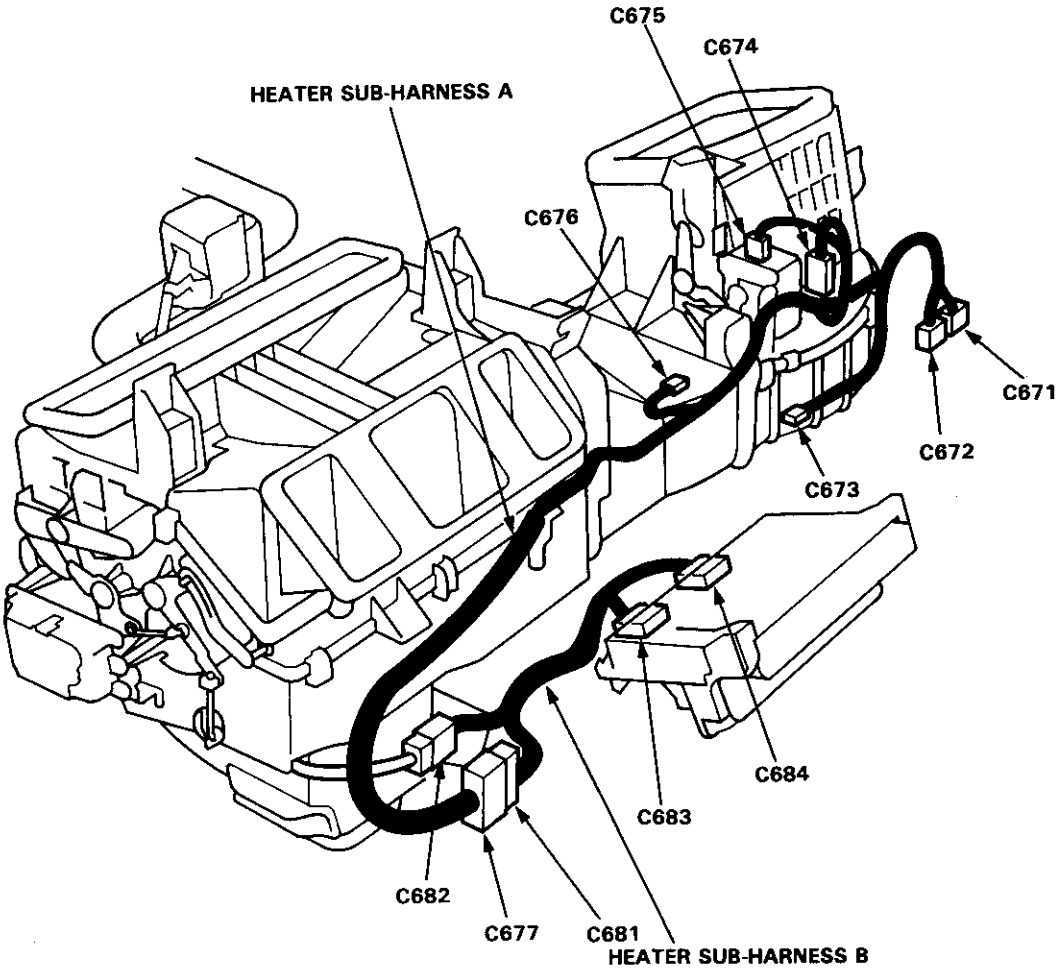

SRS Main Harness

Connector or Terminal	Number of Cavities	Location	Connects to	Notes
C801	2	Behind dashboard lower cover	Under-dash fuse/relay box (C929)	
C802	4	Under left side of dash	Main wire harness (C427)	
C803	*6*	*Under left side of dash*	*Cable reel*	
C804	18	Middle of floor	SRS unit	
C805	2	Under left side of dash	Left dash sensor	
C806	2	Under right side of dash	Right dash sensor	
C807	3	Behind glove box	Passenger's airbag assembly	
G801		Middle of floor	Body ground, via SRS main harness	

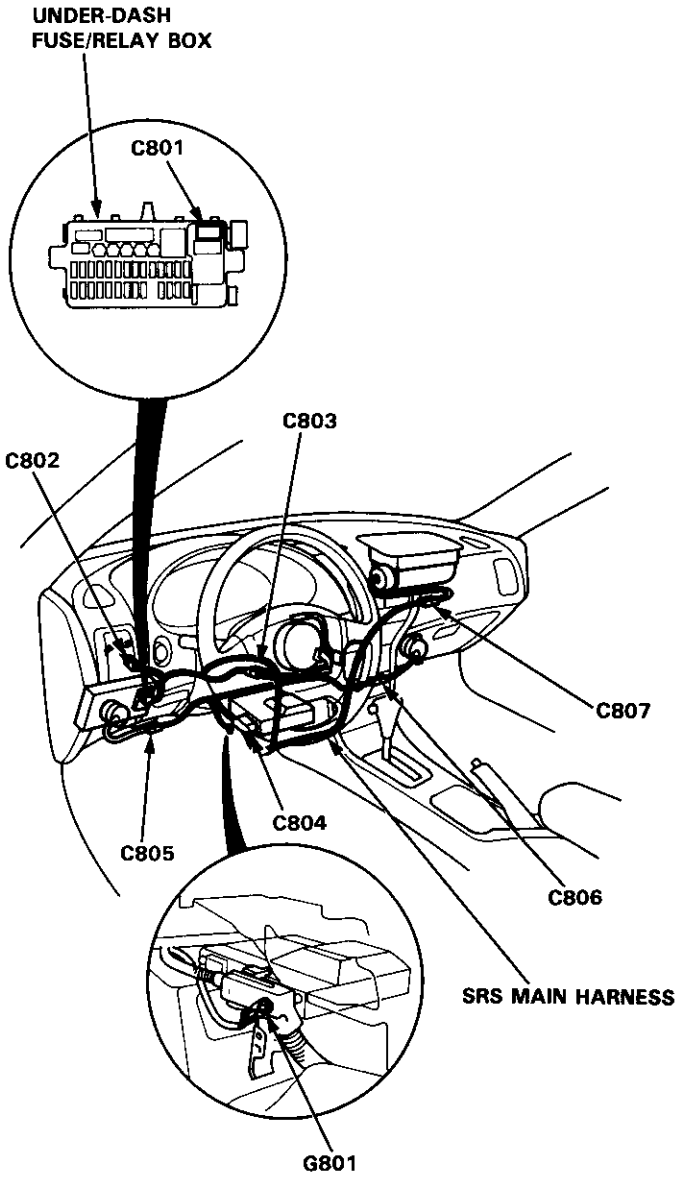

Fuses

Under-dash Fuse/Relay Box

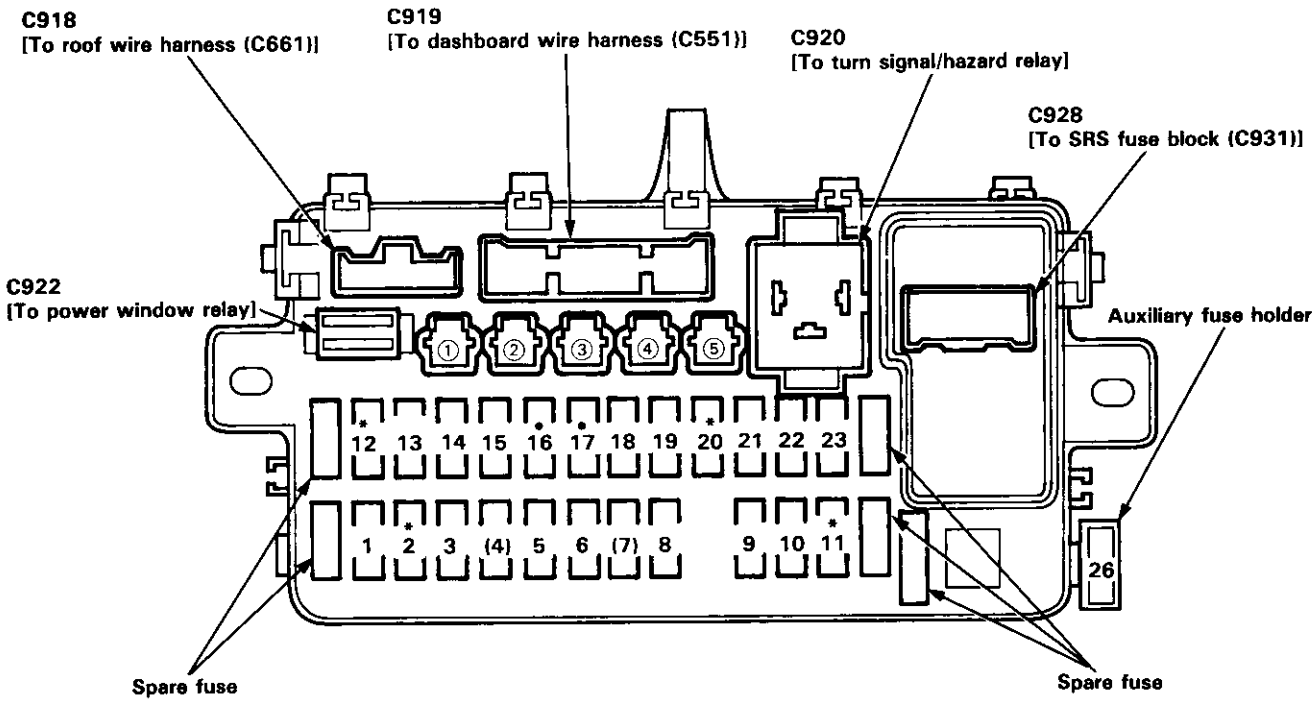

*: Not used
•: Canada
( ): Sedan
①: C923 [Option (BAT)]
②: C924 [Option (BAT)]
③: C925 [Option (IG2)]
④: C926 [Option (No. 19 fuse)]
⑤: C927 [Option (ACC)]

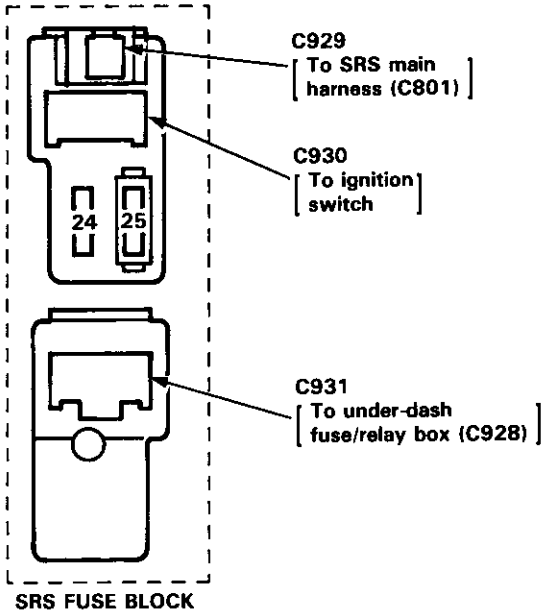

Fuse Number	Amps	Wire Color	Component (s) or Circuit (s) Protected
1	30 A	WHT	Moonroof motor
2	——	——	Not used
3	7.5 A	WHT/RED	Integrated control unit, Ceiling light, Power antenna motor, Data link connector (DLC)
4	20 A	YEL/BLK	Right rear power window motor (Sedan)
5	20 A	WHT/YEL	Driver's power window motor
6	20 A	WHT/GRN	Power door lock control unit
7	20 A	GRN/BLK	Left rear power window motor (Sedan)
8	20 A	BLU/BLK	Passenger's power window motor
9	10 A	RED/BLU	Right headlight (High beam)
10	10 A	RED/GRN	Left headlight (High beam), High beam indicator light
11	——	——	Not used
12	——	——	Not used
13	7.5 A	BLK/YEL	Rear window defogger system, A/C system, ABS control unit, Power mirror actuator
14	20 A	GRN/BLK	Wiper/washer system, Moonroof relay, Integrated control unit
15	10 A	YEL	Gauges, Clock, Back-up lights, Maintenance reminder unit
16	7.5 A	YEL/BLK	Daytime running lights control unit (Canada)
17	10 A	WHT/YEL	Daytime running lights control unit (Canada)
18	7.5 A	BLU/WHT	ECM, PGM-FI main relay
19	10 A	RED/BLK	Dash lights, Parking lights, Taillights, License plate lights
20	——	——	Not used
21	10 A	RED/WHT	Right headlight (Low beam)
22	10 A	RED/YEL	Left headlight (Low beam)
23	15 A	YEL/RED	Stereo radio/cassette player, Cigarette lighter
24	*1	RED	SRS unit
		BLK/YEL	PGM-FI main relay, TCM, Cruise control unit, VSS, ELD unit (USA)
25	10 A	PNK	SRS unit
26	10 A	YEL/BLK	Turn signal/hazard relay

*1 No. 24 (15 A): B18B1 engine
No. 24 (20 A): B18C1 engine

Under-dash Fuse/Relay Box (cont'd)

NOTE: View from the backside of the under-dash fuse/relay box

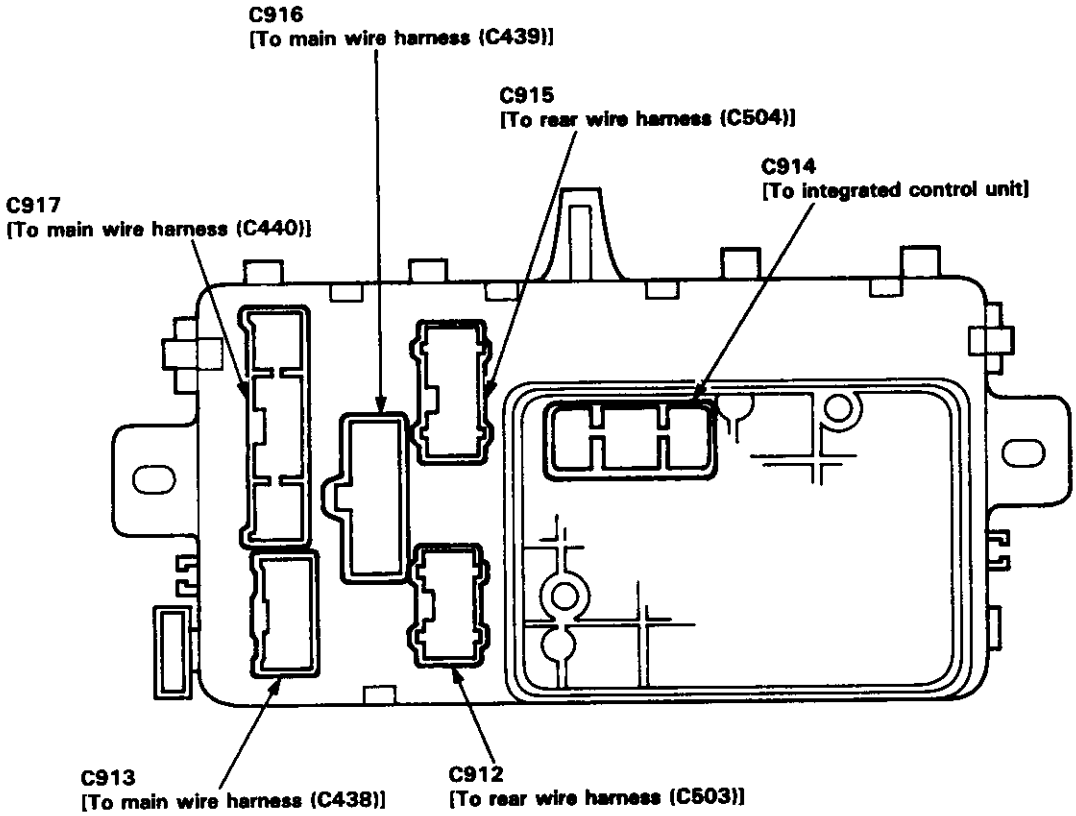

Under-hood ABS Fuse/Relay Box

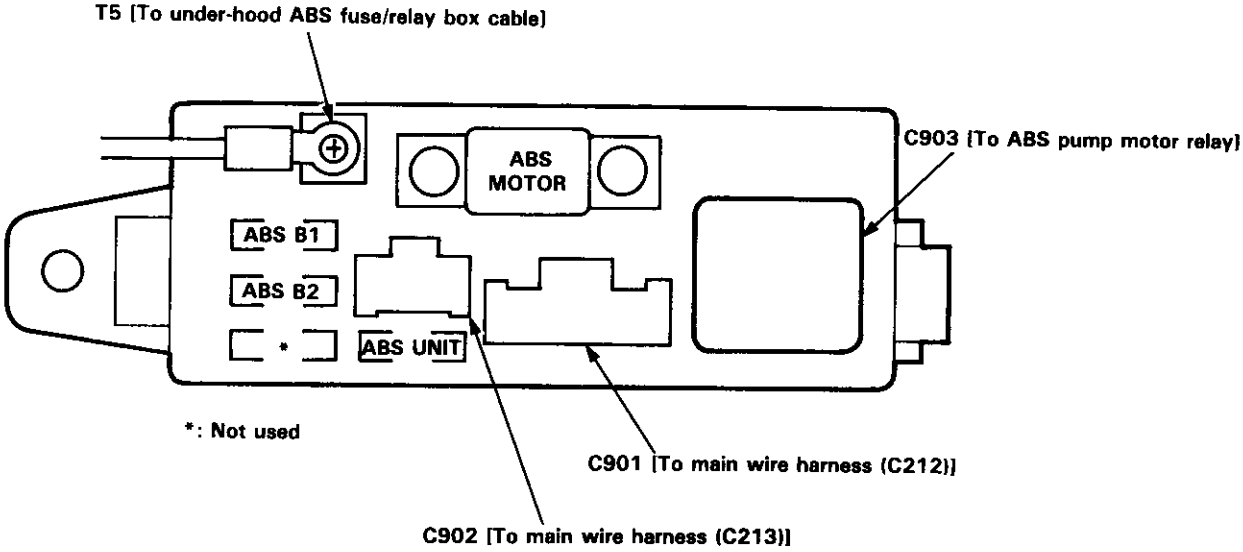

Fuse Name	Amps	Wire Color	Component (s) or Circuit (s) Protected
ABS B1	20 A	WHT/GRN	Right/left ABS front solenoids
ABS B2	15 A	WHT	ABS control unit, ABS rear solenoid
ABS MOTOR	40 A	——	ABS pump motor relay, ABS unit (10 A) fuse
ABS UNIT	10 A	BRN/YEL	ABS control unit

Under-hood Fuse/Relay Box

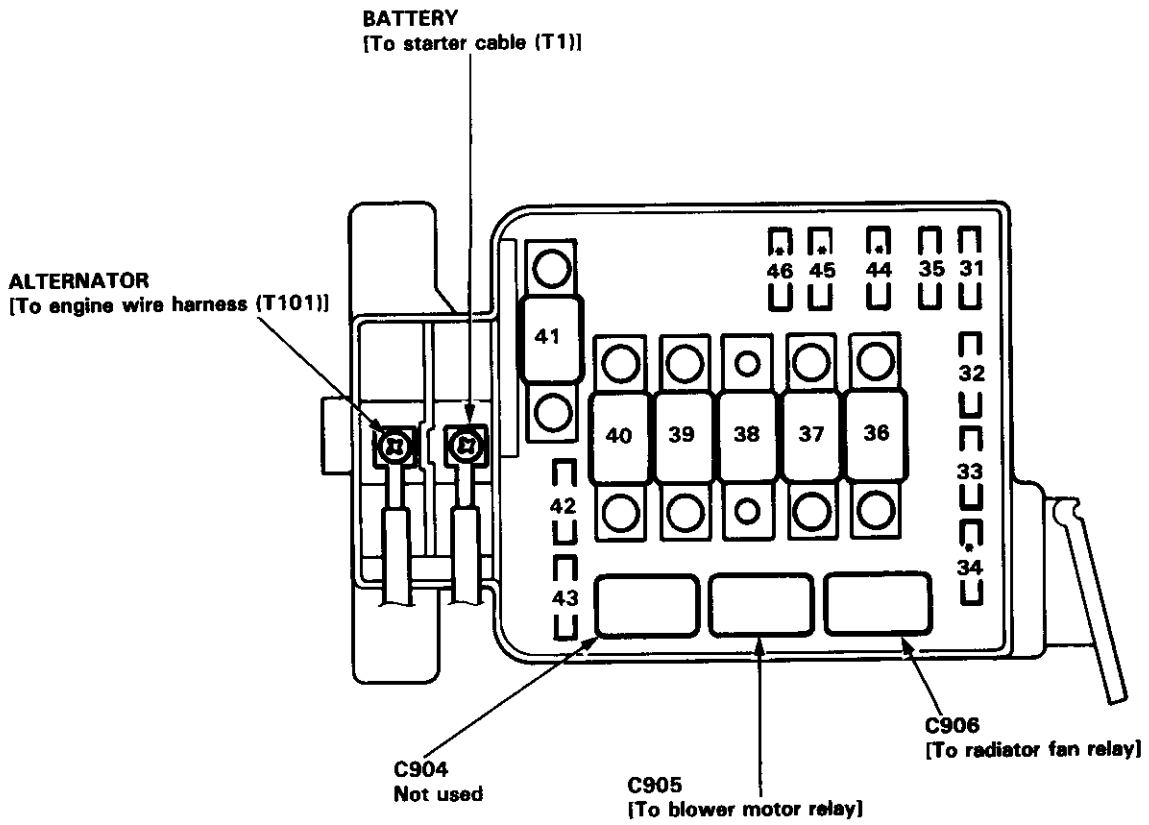

*: Not used

Fuse Number	Amps	Wire Color	Component (s) or Circuit (s) Protected
31	15 A	YEL/WHT	PGM-FI main relay
32	7.5 A	WHT/BLU	ECM, TCM, Clock, Stereo radio/cassette player, Maintenance reminder unit
33	20 A	BLK/RED	Radiator fan motor
34	——	——	Not used
35	20 A	WHT	Condenser fan motor, A/C compressor clutch
36	50 A	WHT/RED	No. 1 (30 A), No. 3 (7.5 A), No. 4 (20 A), No. 5 (20 A), No. 7 (20 A), No. 8 (20 A) fuses
37	40 A	BLU/WHT	Blower motor
38	30 A	BLK/GRN	Rear window defogger, Noise condenser
39	50 A	WHT/BLK	Ignition switch (BAT)
40	50 A	WHT	Combination light switch, No. 17 (10 A) fuse
41	100 A	——	Power distribution
42	20 A	WHT/GRN	Horn system, Brake system, Key interlock solenoid (A/T)
43	10 A	WHT/GRN	Turn signal/hazard relay
44	——	——	Not used
45	——	——	Not used
46	——	——	Not used

NOTE: View from the backside of the under-hood fuse/relay box

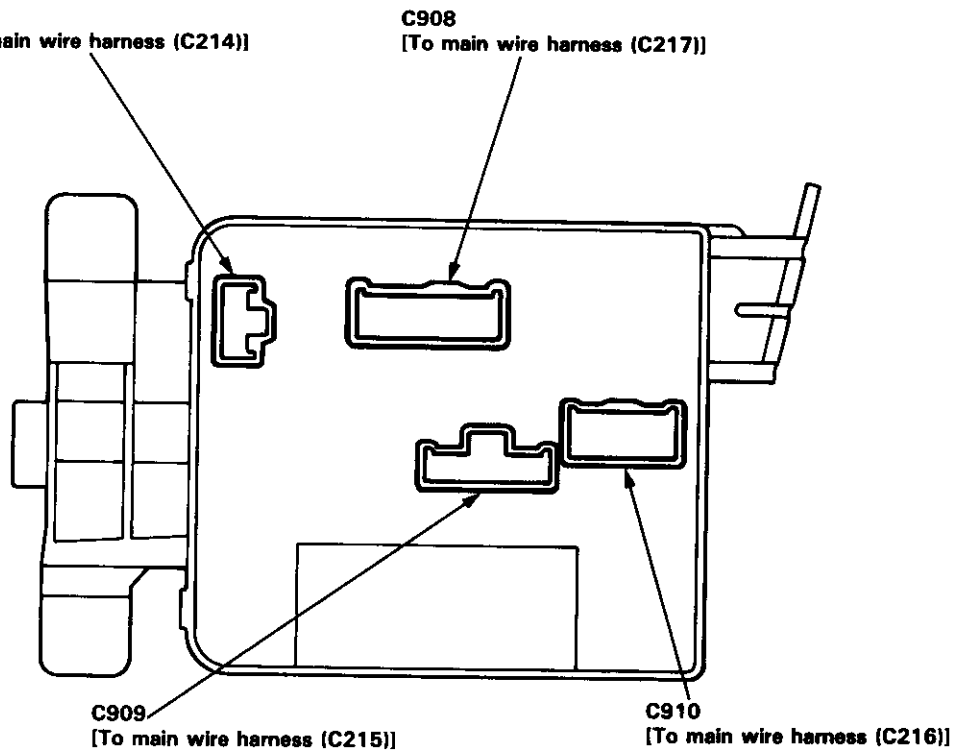

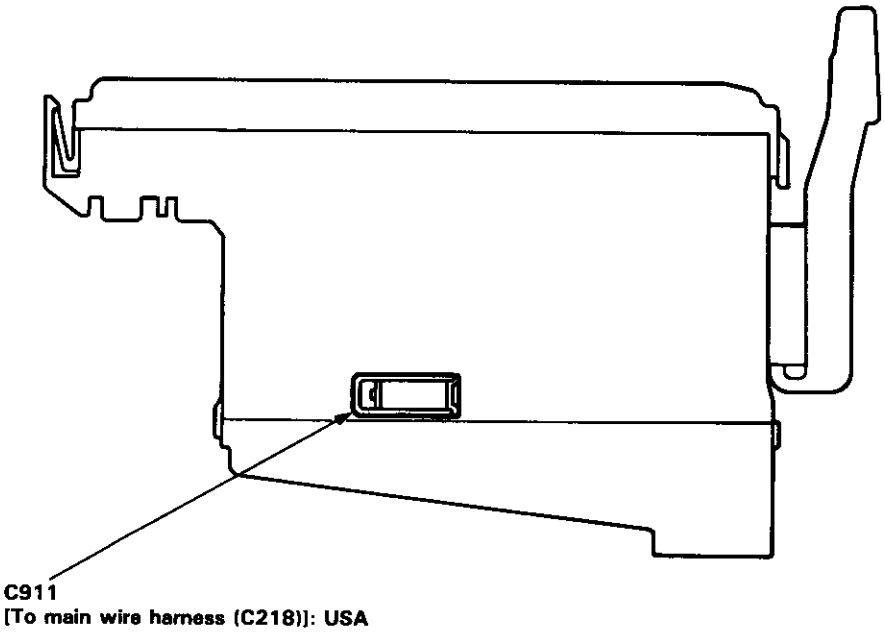

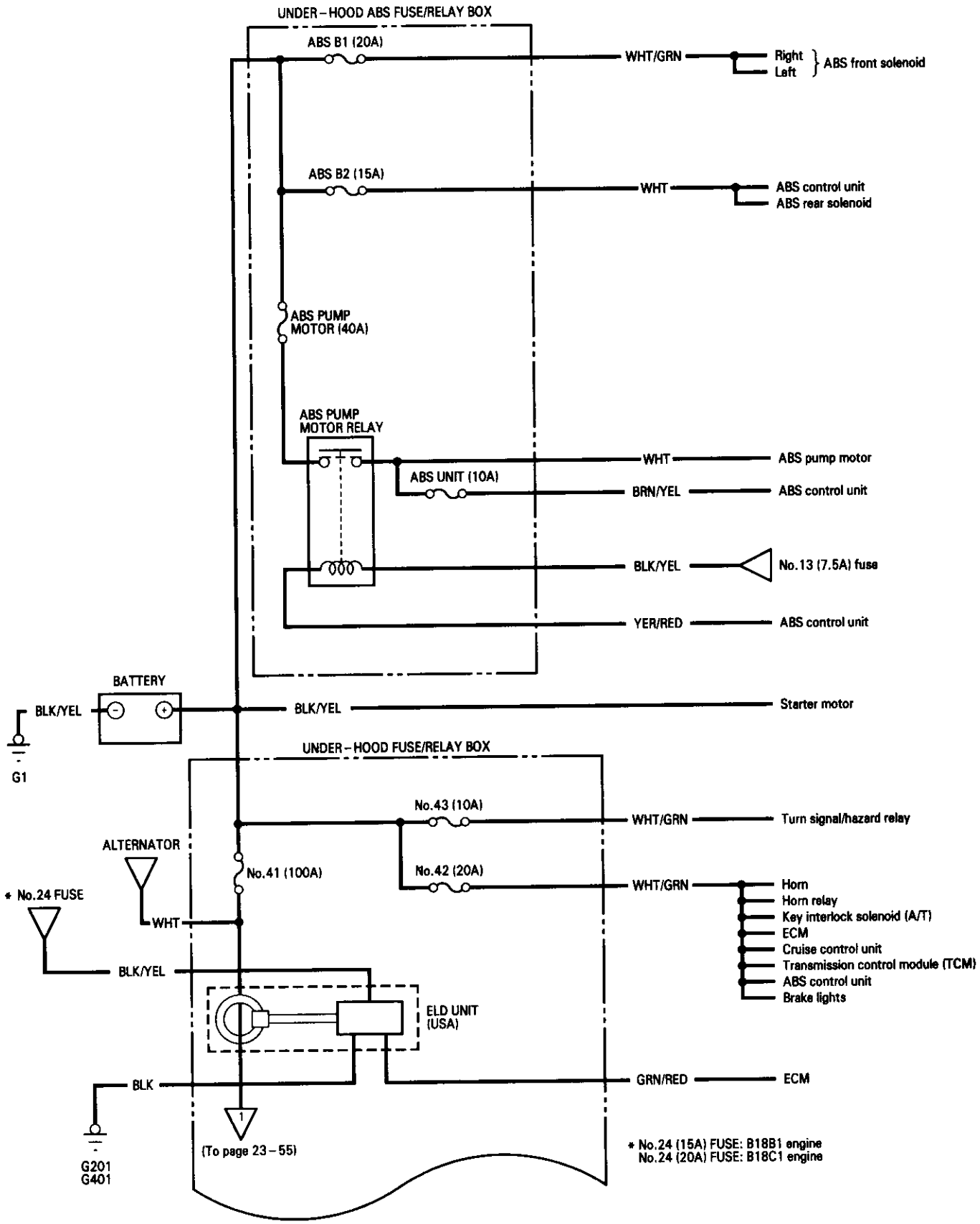
UNDER-HOOD ABS FUSE/RELAY BOX
ABS B1 (20A)
WHT/GRN
Right
Left
ABS front solenoid
ABS B2 (15A)
WHT
ABS control unit
ABS rear solenoid
ABS PUMP MOTOR (40A)
ABS PUMP MOTOR RELAY
WHT
ABS pump motor
ABS UNIT (10A)
BRN/YEL
ABS control unit
BLK/YEL
No.13 (7.5A) fuse
YER/RED
ABS control unit
BATTERY
BLK/YEL
BLK/YEL
Starter motor
G1
UNDER-HOOD FUSE/RELAY BOX
No.43 (10A)
WHT/GRN
Turn signal/hazard relay
ALTERNATOR
No.41 (100A)
No.42 (20A)
WHT/GRN
Horn
Horn relay
Key interlock solenoid (A/T)
ECM
Cruise control unit
Transmission control module (TCM)
ABS control unit
Brake lights
* No.24 FUSE
WHT
BLK/YEL
ELD UNIT (USA)
BLK
GRN/RED
ECM
G201
G401
(To page 23-55)
* No.24 (15A) FUSE: B18B1 engine
No.24 (20A) FUSE: B18C1 engine

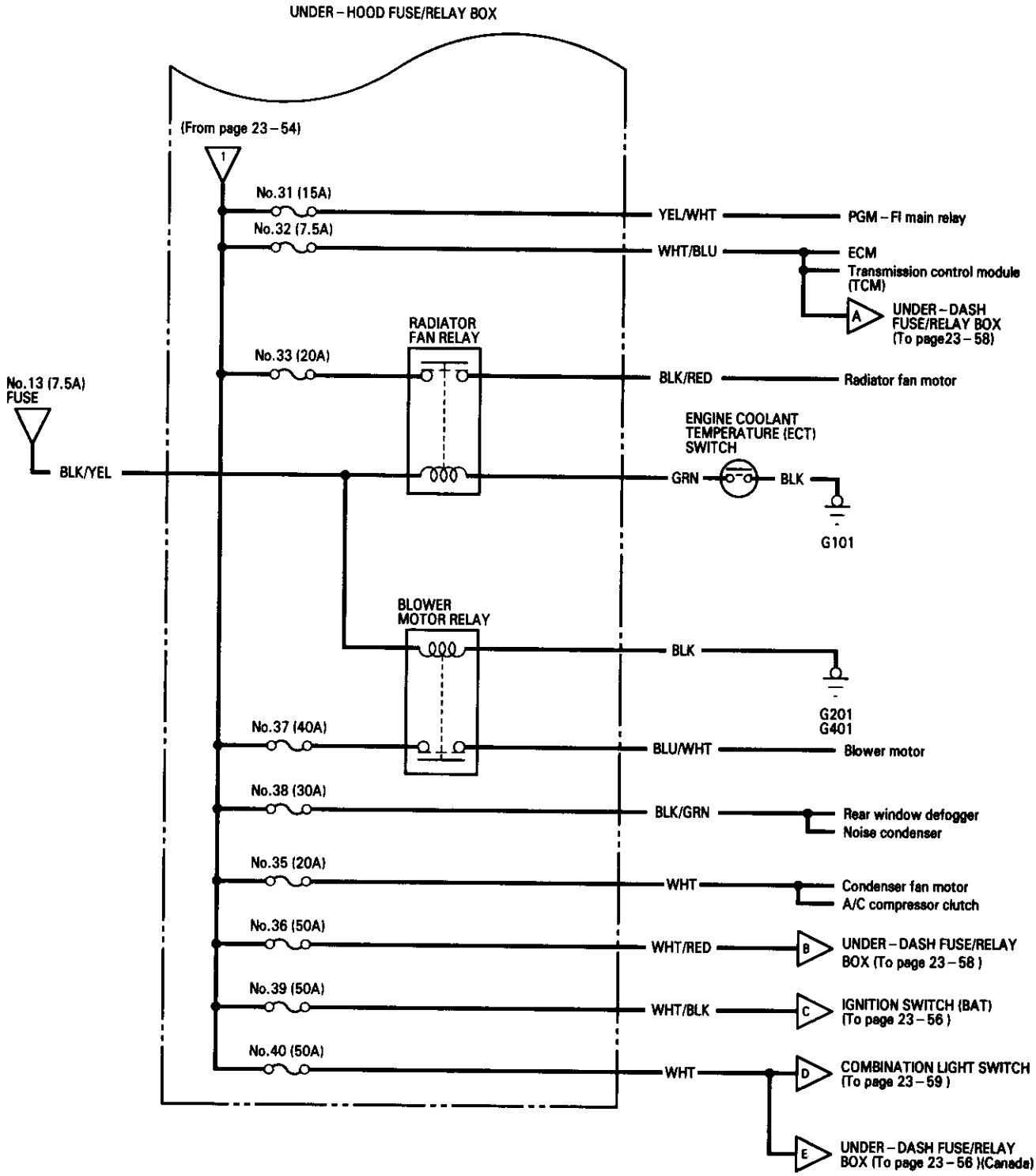
UNDER – HOOD FUSE/RELAY BOX
(From page 23 – 54)
1
No.31 (15A)
YEL/WHT
PGM – FI main relay
No.32 (7.5A)
WHT/BLU
ECM
Transmission control module (TCM)
A
UNDER – DASH FUSE/RELAY BOX (To page23 – 58)
RADIATOR FAN RELAY
No.33 (20A)
BLK/RED
Radiator fan motor
No.13 (7.5A) FUSE
BLK/YEL
ENGINE COOLANT TEMPERATURE (ECT) SWITCH
GRN
BLK
G101
BLOWER MOTOR RELAY
BLK
G201
G401
No.37 (40A)
BLU/WHT
Blower motor
No.38 (30A)
BLK/GRN
Rear window defogger
Noise condenser
No.35 (20A)
WHT
Condenser fan motor
A/C compressor clutch
No.36 (50A)
WHT/RED
B
UNDER – DASH FUSE/RELAY BOX (To page 23 – 58)
No.39 (50A)
WHT/BLK
C
IGNITION SWITCH (BAT) (To page 23 – 56)
No.40 (50A)
WHT
D
COMBINATION LIGHT SWITCH (To page 23 – 59)
E
UNDER – DASH FUSE/RELAY BOX (To page 23 – 56)(Canada)

Power Distribution

Circuit Identification

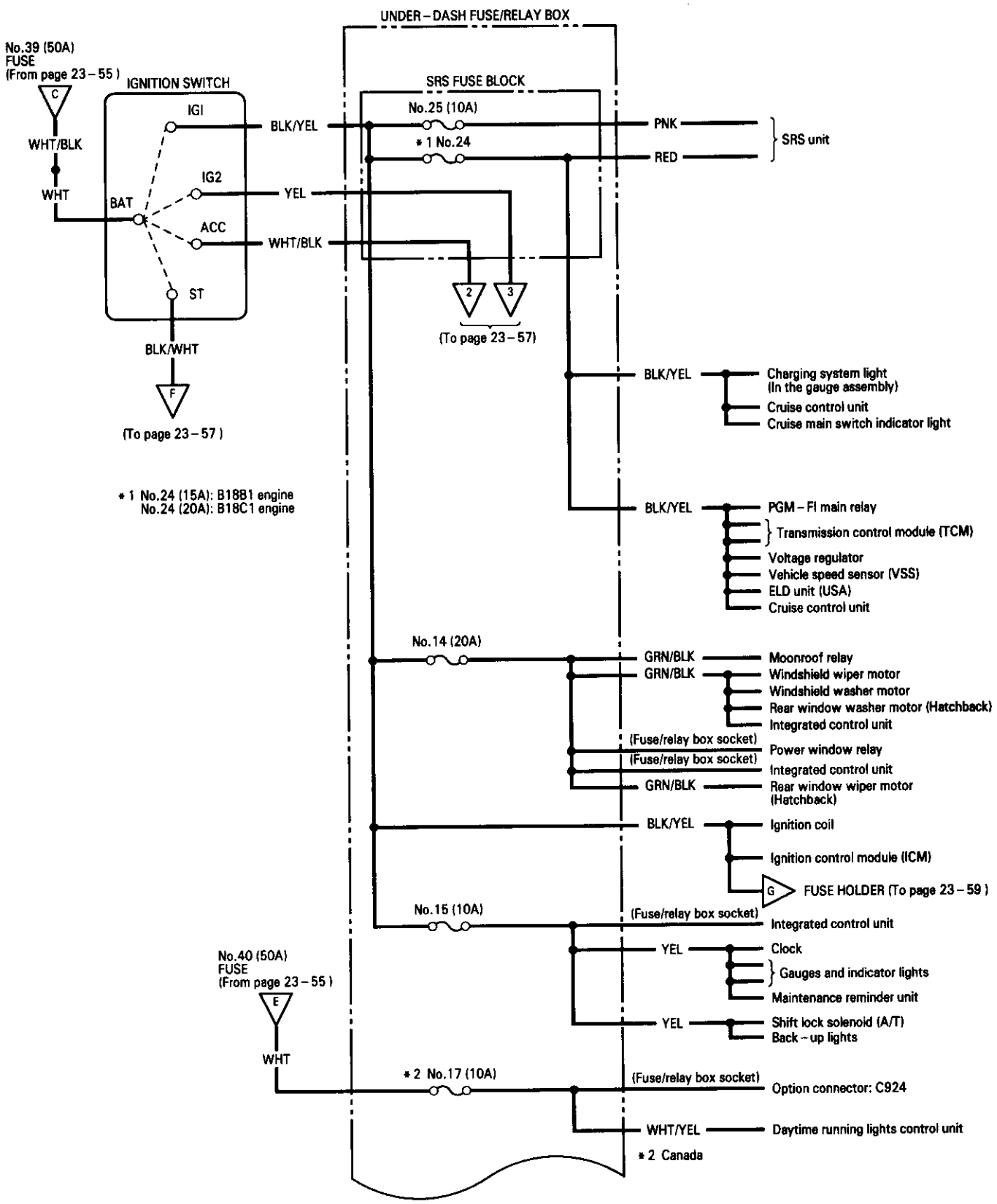

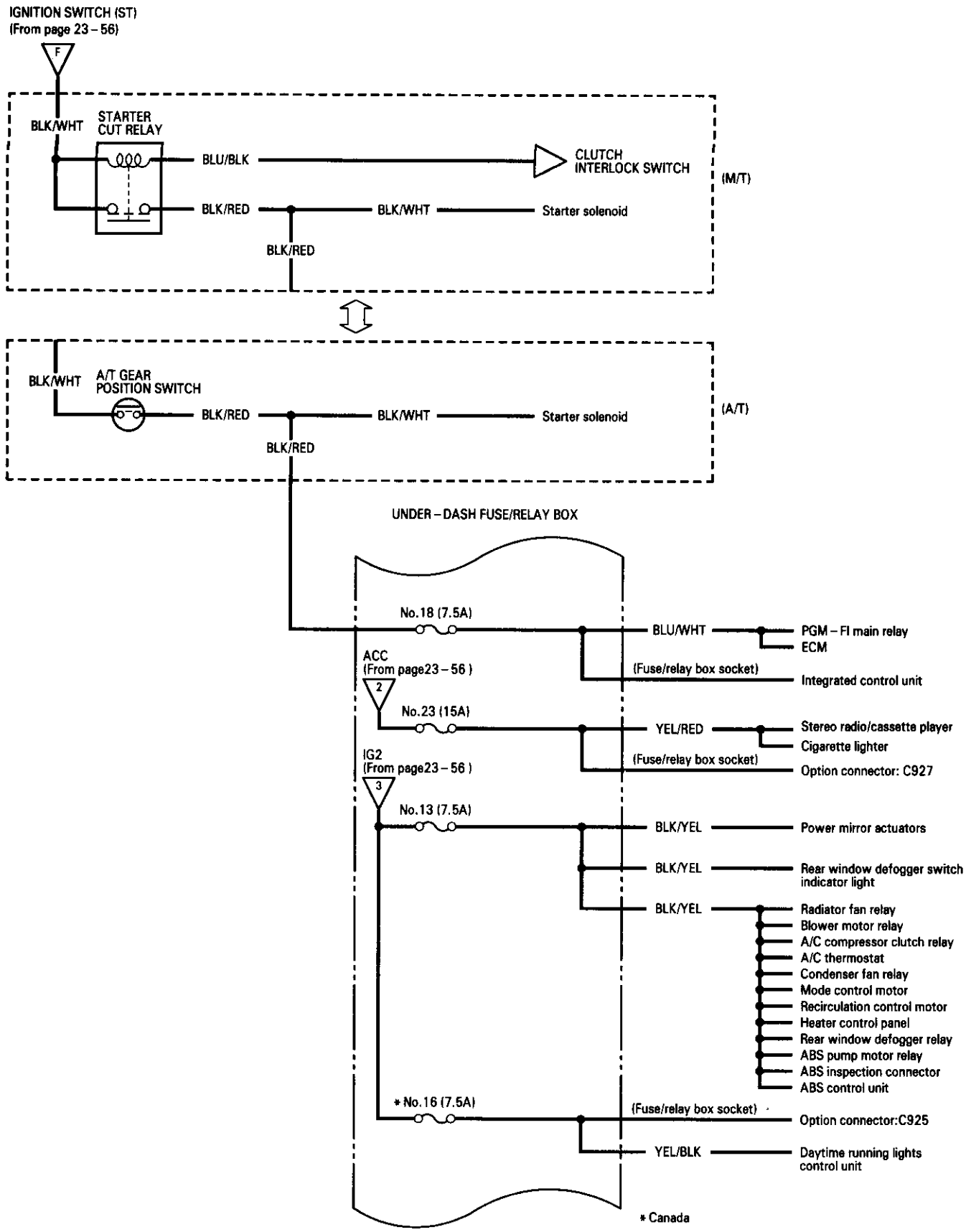
IGNITION SWITCH (ST)
(From page 23 – 56)
F
BLK/WHT
STARTER CUT RELAY
BLU/BLK
CLUTCH INTERLOCK SWITCH
(M/T)
BLK/RED
BLK/WHT
Starter solenoid
BLK/RED
BLK/WHT
A/T GEAR POSITION SWITCH
BLK/RED
BLK/WHT
Starter solenoid
(A/T)
BLK/RED
UNDER – DASH FUSE/RELAY BOX
No.18 (7.5A)
BLU/WHT
PGM – FI main relay
ECM
ACC
(From page23 – 56)
2
(Fuse/relay box socket)
Integrated control unit
No.23 (15A)
YEL/RED
Stereo radio/cassette player
Cigarette lighter
IG2
(From page23 – 56)
3
(Fuse/relay box socket)
Option connector: C927
No.13 (7.5A)
BLK/YEL
Power mirror actuators
BLK/YEL
Rear window defogger switch indicator light
BLK/YEL
Radiator fan relay
Blower motor relay
A/C compressor clutch relay
A/C thermostat
Condenser fan relay
Mode control motor
Recirculation control motor
Heater control panel
Rear window defogger relay
ABS pump motor relay
ABS inspection connector
ABS control unit
* No.16 (7.5A)
(Fuse/relay box socket)
Option connector:C925
YEL/BLK
Daytime running lights control unit
* Canada

Power Distribution

Circuit Identification

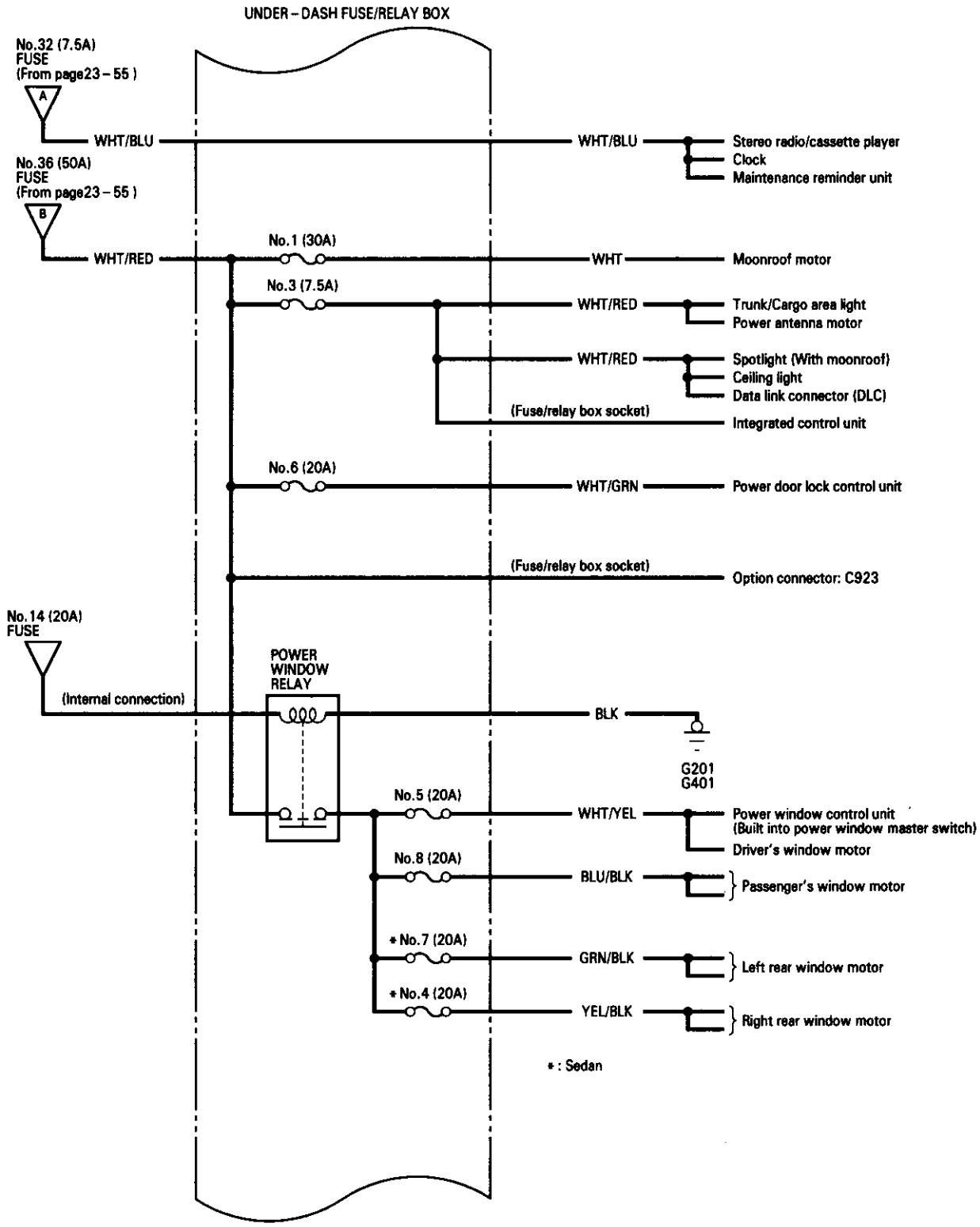

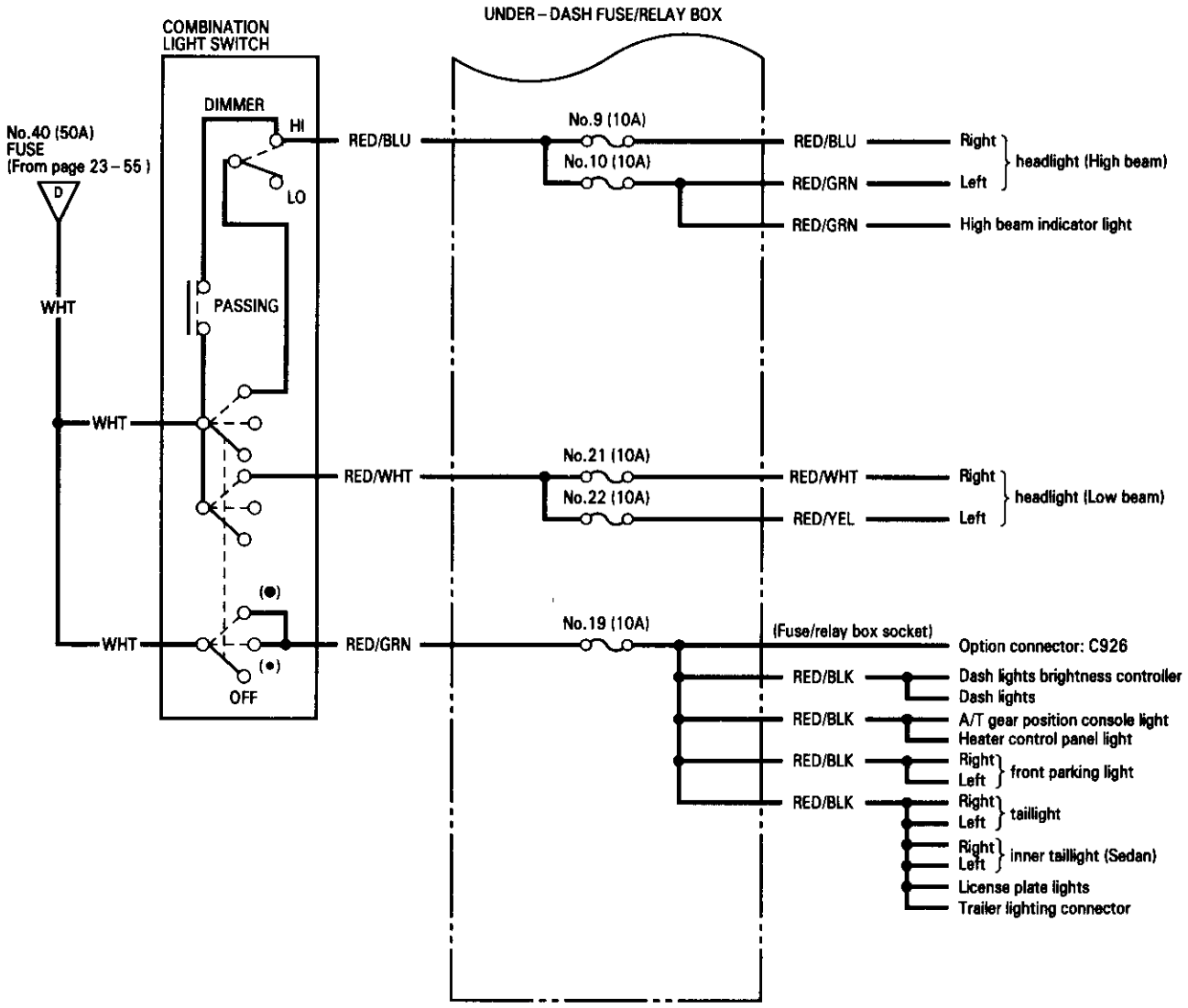
UNDER – DASH FUSE/RELAY BOX
COMBINATION LIGHT SWITCH
DIMMER
HI
LO
PASSING
OFF
No.40 (50A) FUSE (From page 23 – 55)
D
WHT
WHT
WHT
RED/BLU
RED/WHT
RED/GRN
No.9 (10A)
No.10 (10A)
No.21 (10A)
No.22 (10A)
No.19 (10A)
RED/BLU
RED/GRN
RED/WHT
RED/YEL
Right
Left
headlight (High beam)
High beam indicator light
headlight (Low beam)
(Fuse/relay box socket)
Option connector: C926
RED/BLK
Dash lights brightness controller
Dash lights
A/T gear position console light
Heater control panel light
front parking light
taillight
inner taillight (Sedan)
License plate lights
Trailer lighting connector

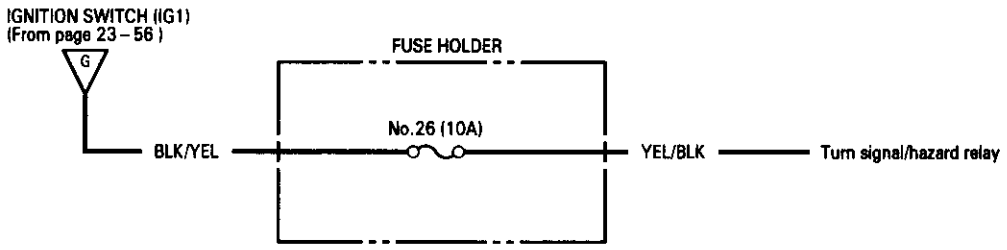
IGNITION SWITCH (IG1) (From page 23 – 56)
G
FUSE HOLDER
No.26 (10A)
BLK/YEL
YEL/BLK
Turn signal/hazard relay

Ground Distribution

Circuit Identification

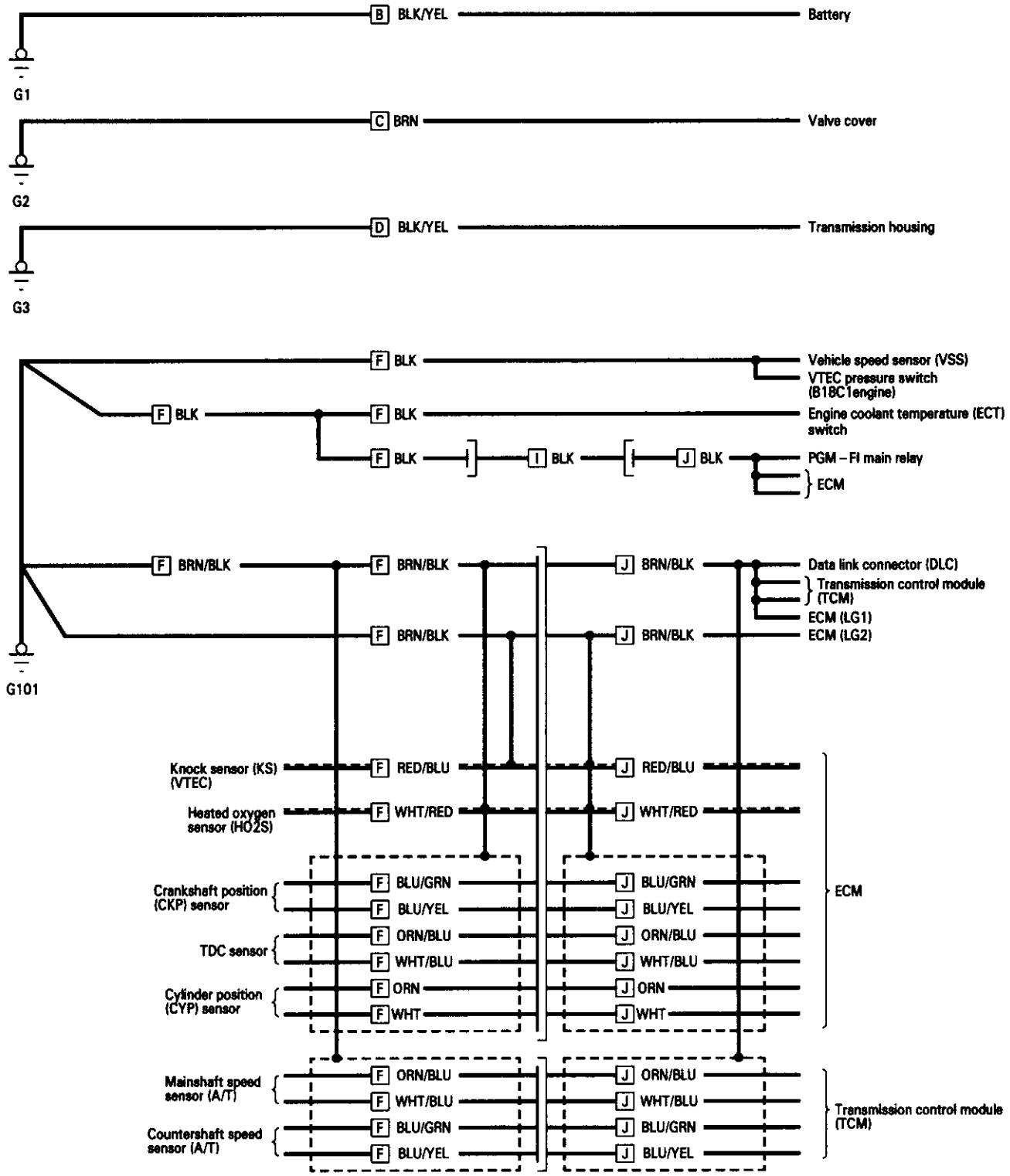

B : Battery ground cable
C : Engine ground cable A
D : Engine ground cable B
F : Engine wire harness
I : Engine compartment wire harness
J : Main wire harness

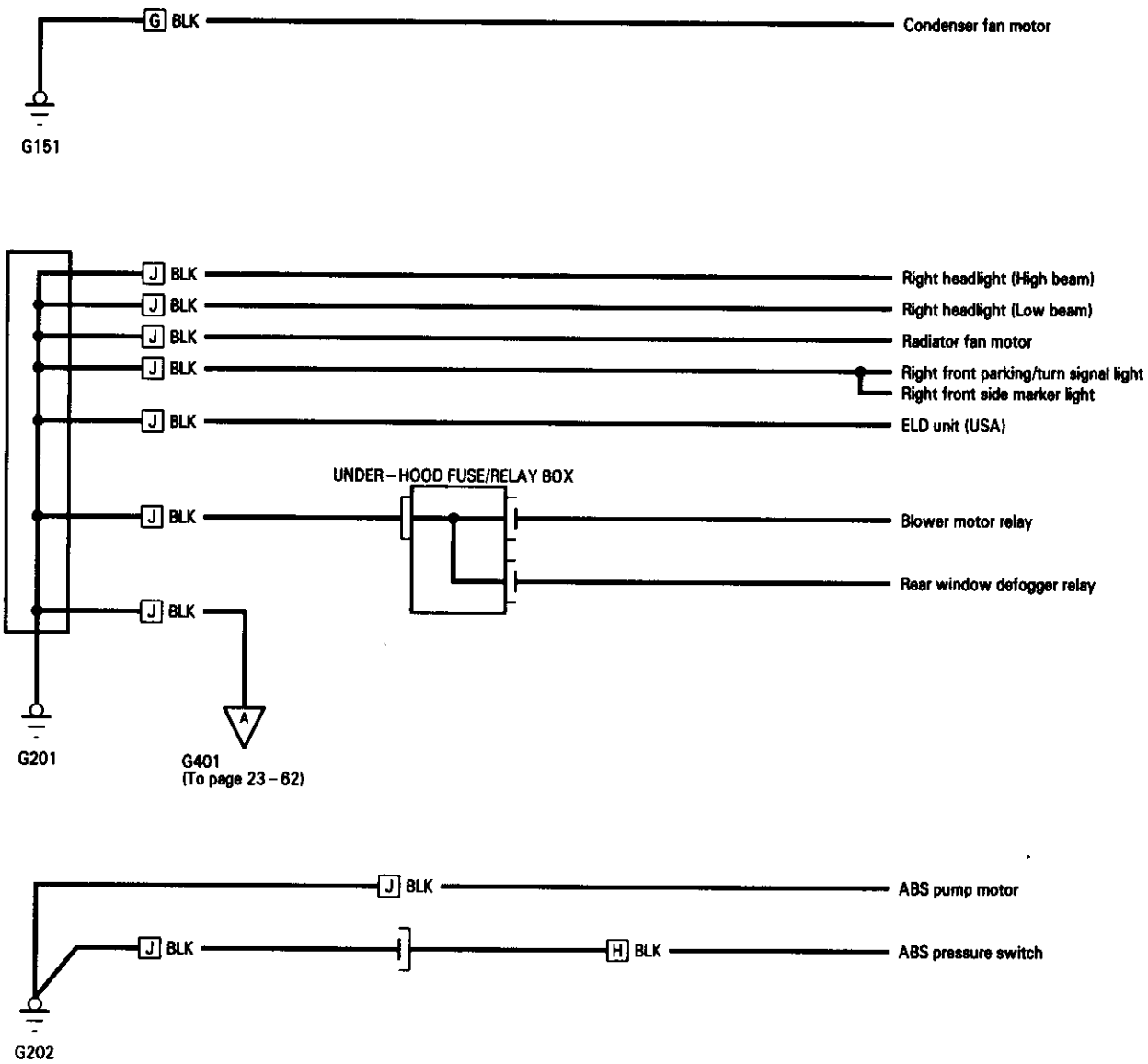

G : A/C wire harness
H : ABS modulator unit wire harness
J : Main wire harness

Ground Distribution

Circuit Identification

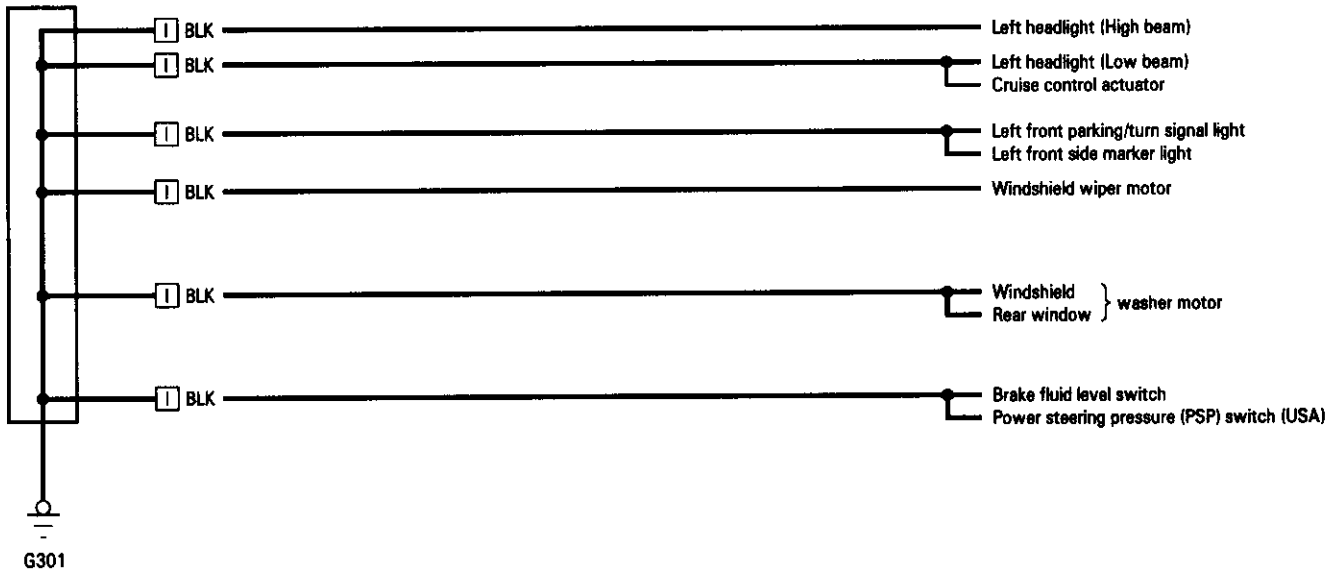

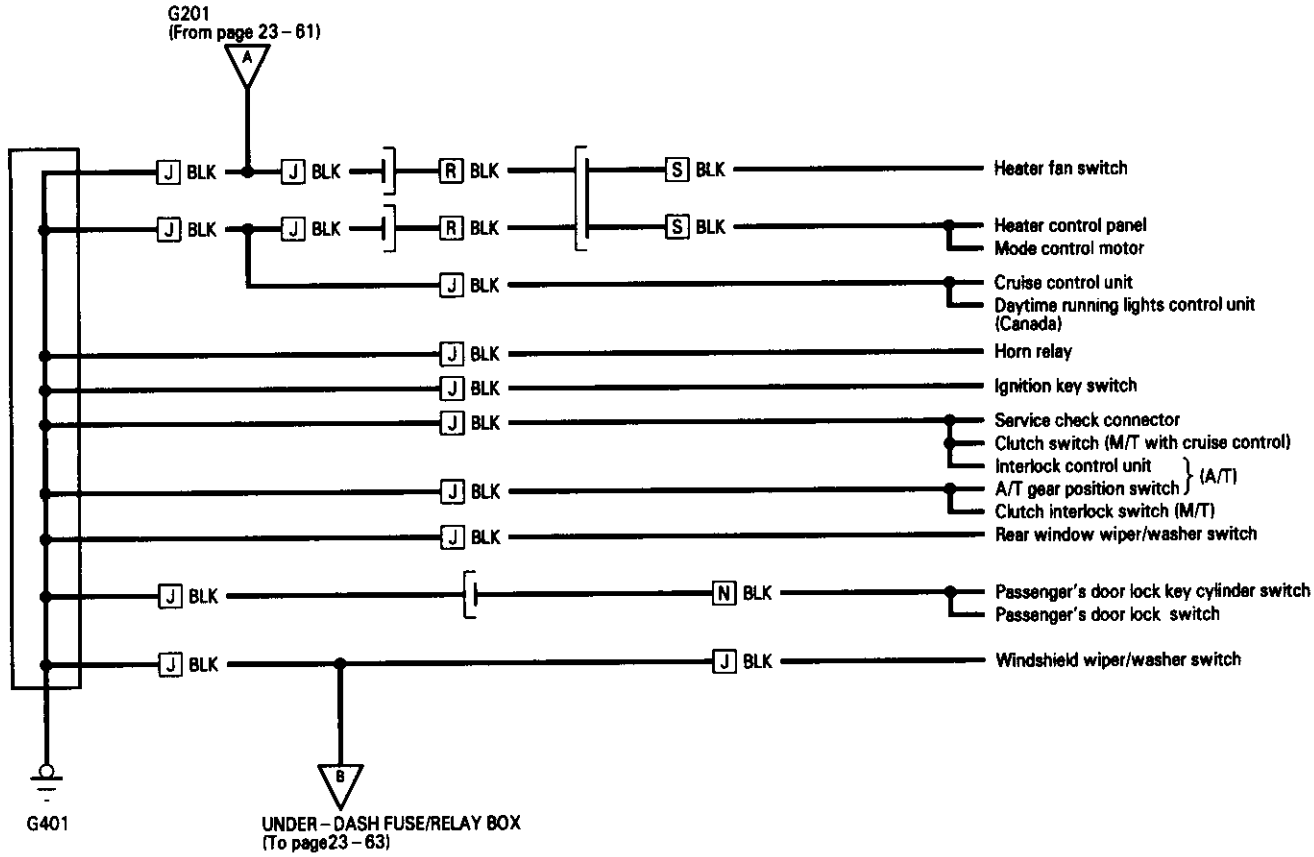

I : Engine compartment wire harness
J : Main wire harness
N : Front passenger's door wire harness
R : Heater sub – harness A
S : Heater sub – harness B

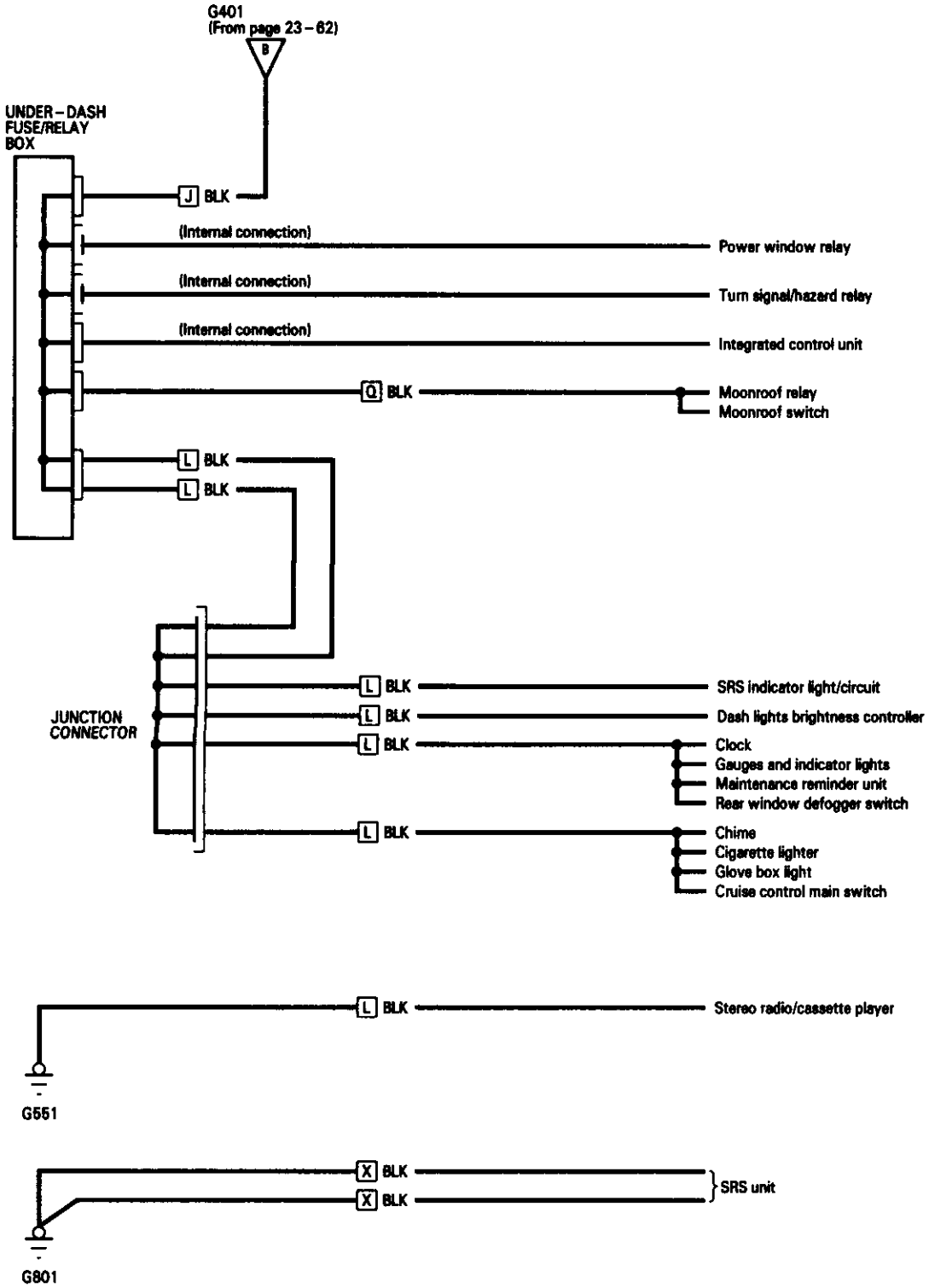

J : Main wire harness
L : Dashboard wire harness
Q : Roof wire harness
X : SRS main harness

Ground Distribution

Circuit Identification

Hatchback:

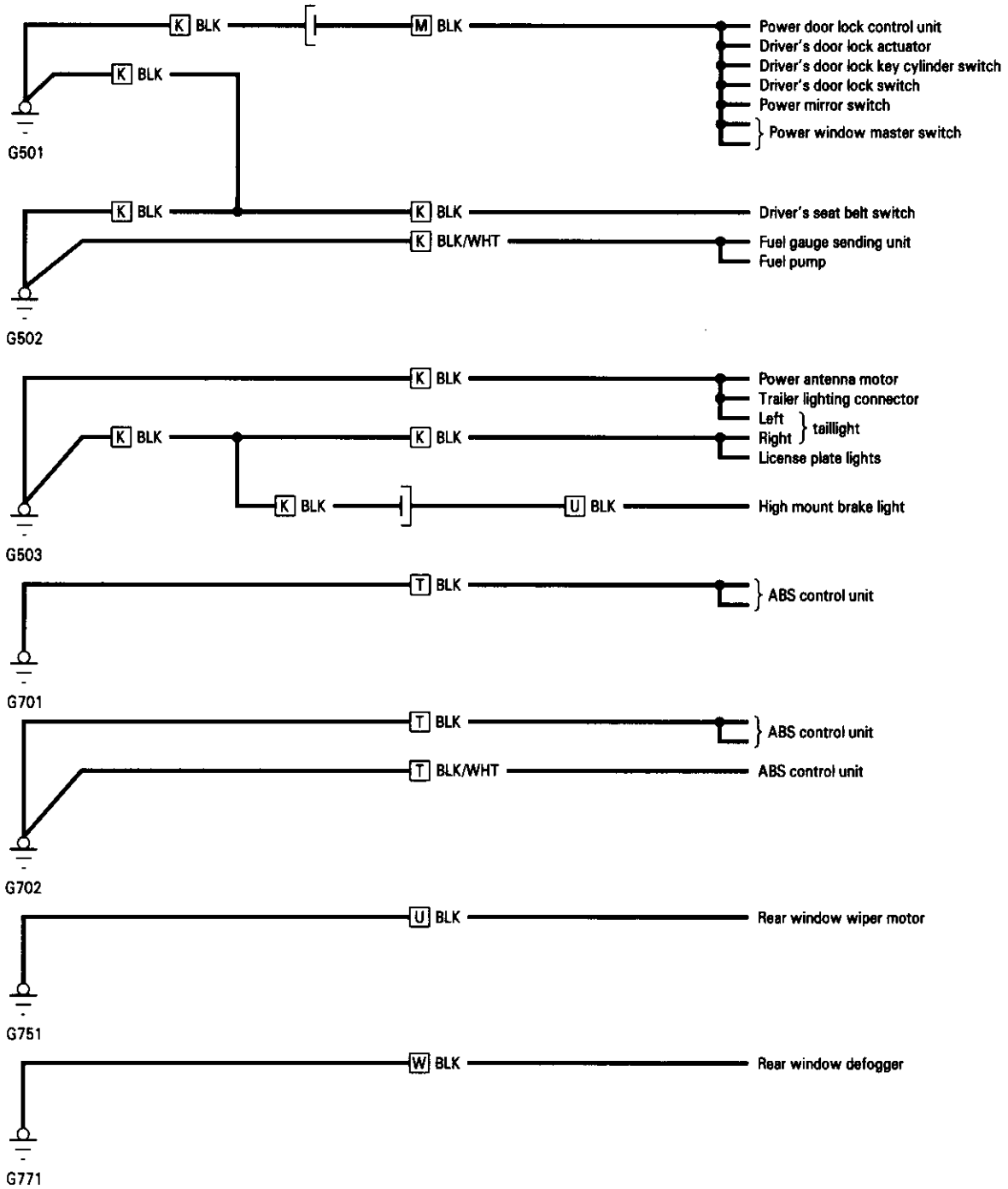

K : Rear wire harness
M : Driver's door wire harness
T : ABS sub-harness
U : Tailgate wire harness
W : Rear window defogger ground wire

Sedan:

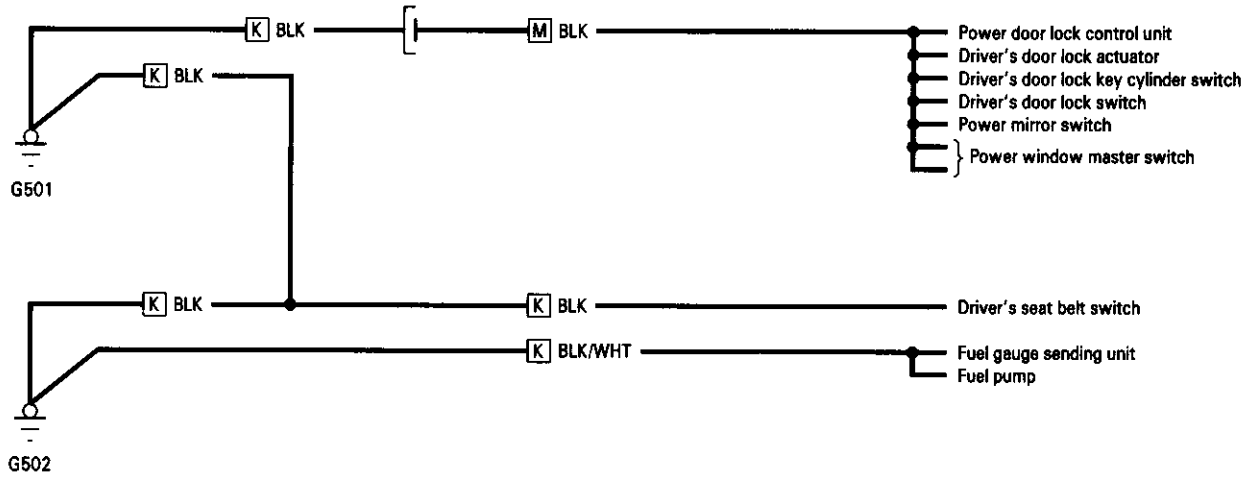

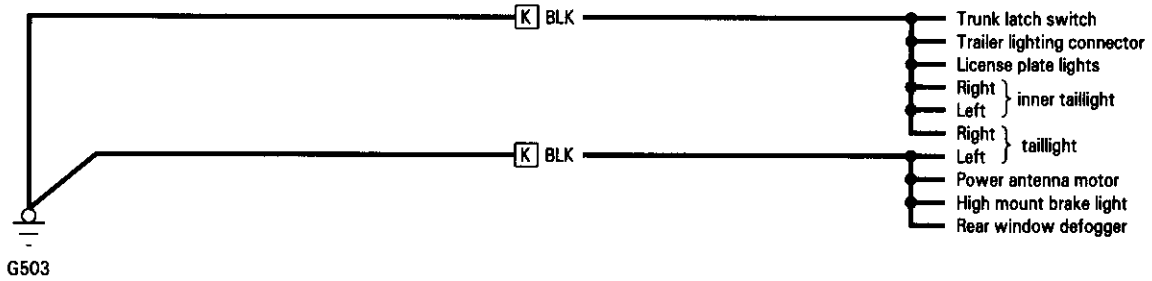

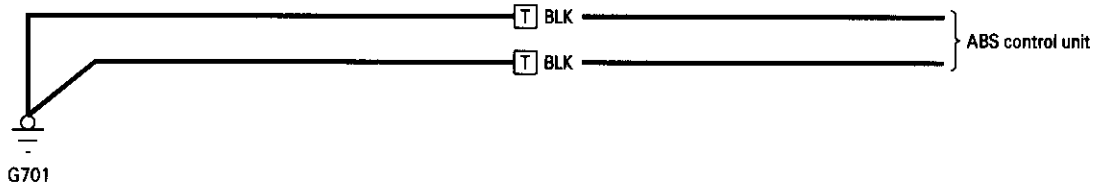

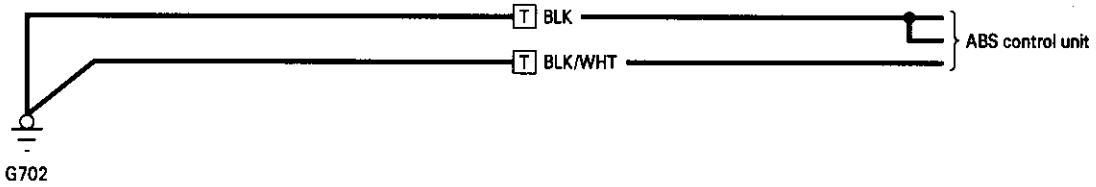

K : Rear wire harness

M : Driver's door wire harness

T : ABS sub – harness

Test

⚠ WARNING

- **Battery fluid (electrolyte) contains sulfuric acid. It may cause severe burns if it gets on your skin or in your eyes. Wear protective clothing and a face shield.**
  - **If electrolyte gets on your skin or clothes, rinse it off with water immediately.**
  - **If electrolyte gets in your eyes, flush it out by splashing water in your eyes for at least 15 minutes; call a physician immediately.**
- **A battery gives off hydrogen gas. If ignited, the hydrogen will explode and could crack the battery case and splatter acid on you. Keep sparks, flames, and cigarettes away from the battery.**
- **Overcharging will raise the temperature of the electrolyte. This may force electrolyte to spray out of the battery vents. Follow the charger manufacturer's instructions and charge the battery at a proper rate.**

NOTE: The original radio has a coded theft protection circuit. If service to the car requires any of the following, be sure to get the customer's code number before
— disconnecting the battery.
— removing No. 32 (7.5 A) fuse from the under-hood fuse/relay box.
— removing the radio.
After service, reconnect power to the radio and turn it on. When the word "CODE" is displayed, enter the customer's 5-digit code to restore radio operation.

Use either a JCI or Bear ARBST tester, and follow the manufacturer's procedures. If you don't have one of these computerized testers, follow this conventional test procedure:
To get accurate results, the temperature of the electrolyte must be between 70°F (21°C) and 100°F (38°C).

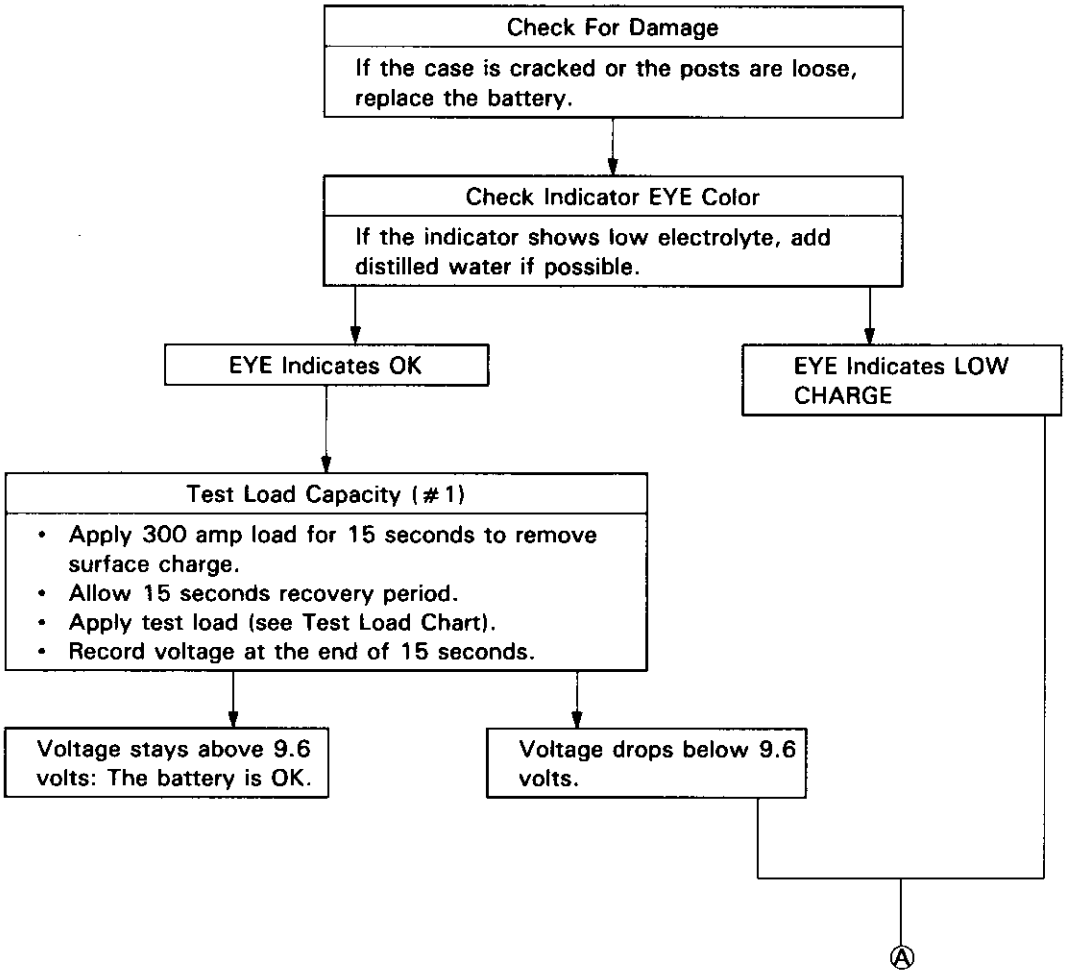

Ⓐ

Charge on High Setting (40 amps)

Charge until EYE shows charge is OK; plus an additional 30 minutes to assure full charge.
NOTE: If the battery charge is very low, it may be necessary to bypass the charger's polarity protection circuitry.
If the EYE does not show charge is OK within three hours, the battery is no good; replace it.
Write down how long the battery was charged.

Test Load Capacity (#2)

- Apply 300 amp load for 15 seconds to remove surface charge.
- Allow 15 seconds recovery period.
- Apply test load (see Test Load Chart).
- Record voltage at the end of 15 seconds.

Voltage stays above 9.6 volts: The battery is OK.

Voltage drops below 9.6 volts: The battery is no good.

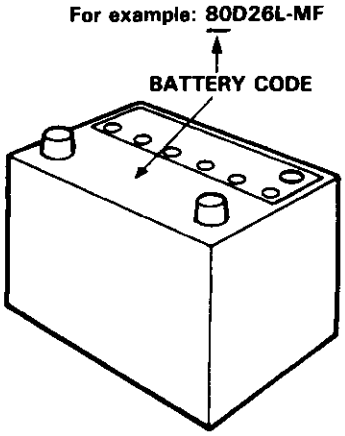

TEST LOAD CHART

Use the test load or 1/2 the cold cranking amps (CCA) printed on the label on the top of the battery. If neither is indicated, use the information below:

BATTERY CODE	COLD CRANKING AMPS (CCA)	TEST LOAD (amps)
80	550	270
70	440	220
55	405	200

Relay Test

Normally-open Type:

1. Remove the power relay from its socket.

2. Check continuity between relay terminals.

   - There should be continuity between the A and C terminals when power and ground are connected to the B and D terminals.
   - There should be no continuity when power is disconnected.

Terminal / Power (B – D)	A	C
Connected	○	○
Disconnected		

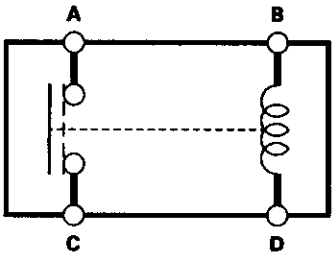

- Power window relay
- Radiator fan relay
- Blower motor relay

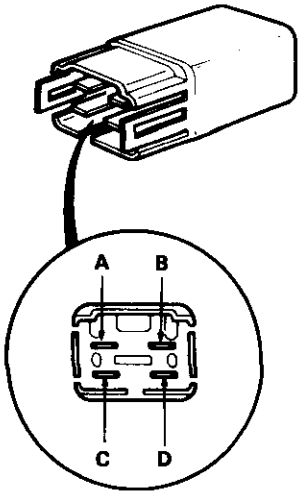

- Starter cut relay
- Condenser fan relay
- A/C compressor clutch relay
- ABS front fail-safe relay
- ABS rear fail-safe relay

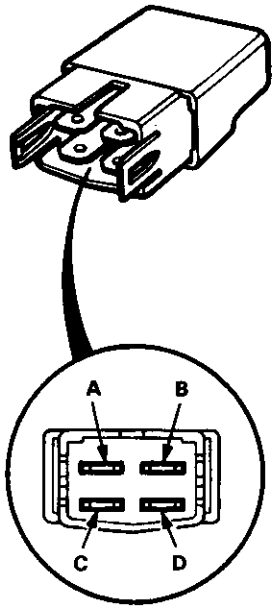

- Horn relay

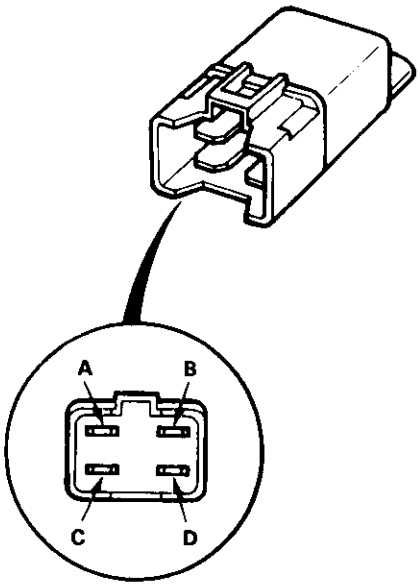

- ABS pump motor relay

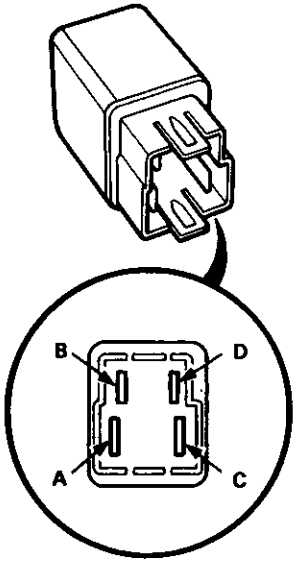

- Moonroof relay

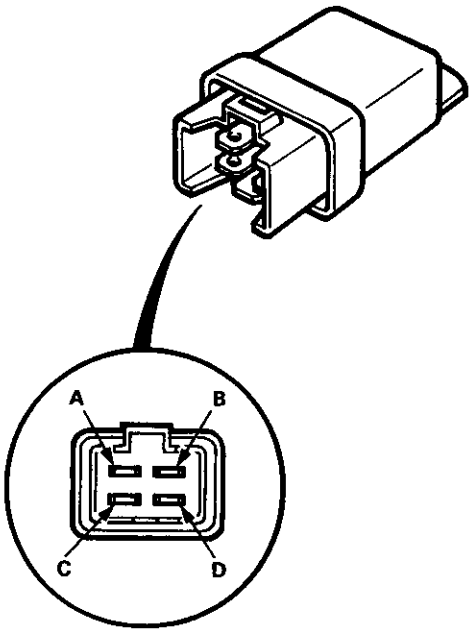

- Rear window defogger relay

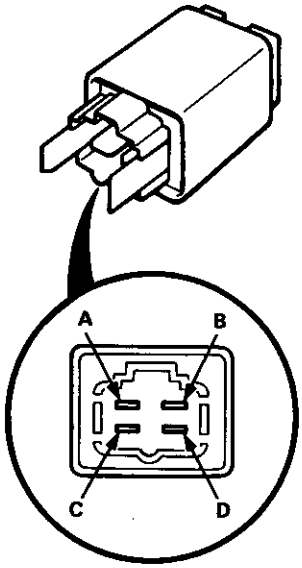

Ignition Switch

Test

CAUTION:

- **All SRS electrical wiring harnesses are covered with yellow insulation.**
- **Before disconnecting any part of the SRS wire harness, connect the short connector(s).**
- **Replace the entire affected SRS harness assembly if it has an open circuit or damaged wiring.**

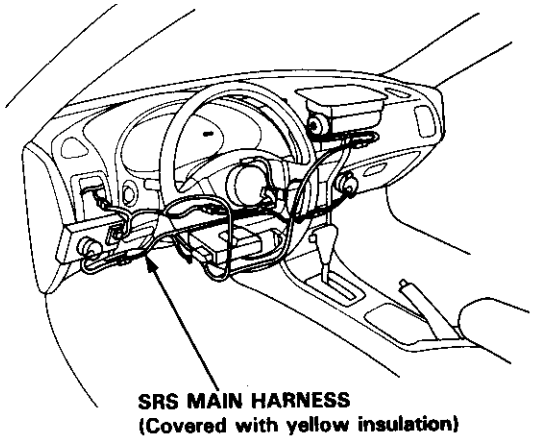

1. Remove the dashboard lower cover and knee bolster.

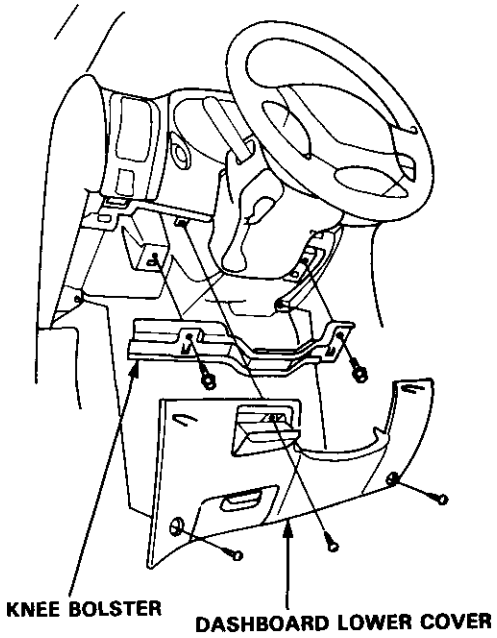

2. Disconnect the 5-P connector from the under-dash fuse/relay box and the 7-P connector from the main wire harness.

3. Check for continuity between the terminals in each switch position according to the table.

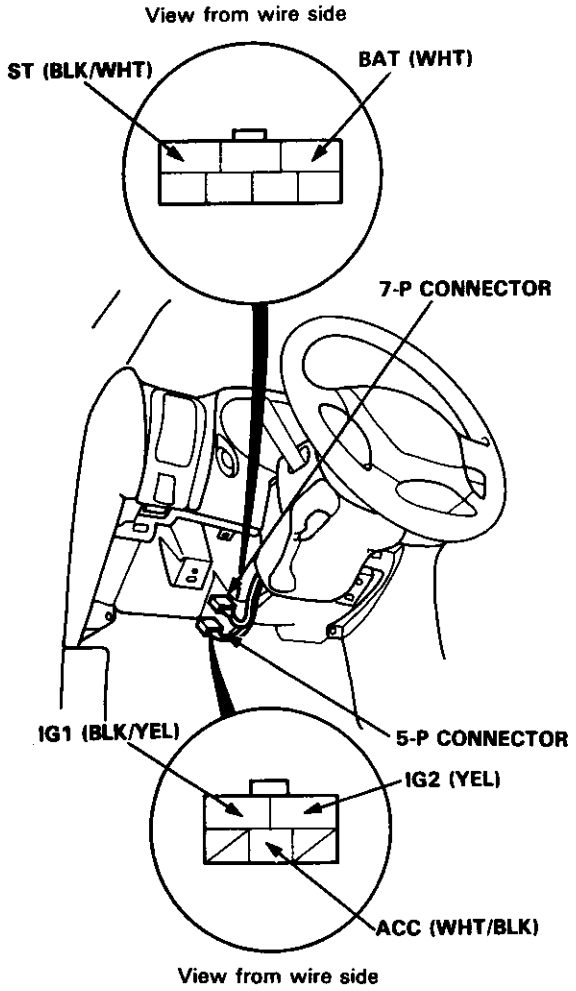

Position \ Terminal	ACC	BAT	IG1	IG2	ST
0					
I	○—○				
II	○—○	○—○	○—○		
III		○—○	○—○	○—○	○

4. If continuity checks do not agree with the table, replace the electrical part of the switch (see page 23-72).

Electrical Switch Replacement

CAUTION:
- **All SRS electrical wiring harnesses are covered with yellow insulation.**
- **Before disconnecting any part of the SRS wire harness, connect the short connector(s).**
- **Replace the entire affected SRS harness assembly if it has an open circuit or damaged wiring.**

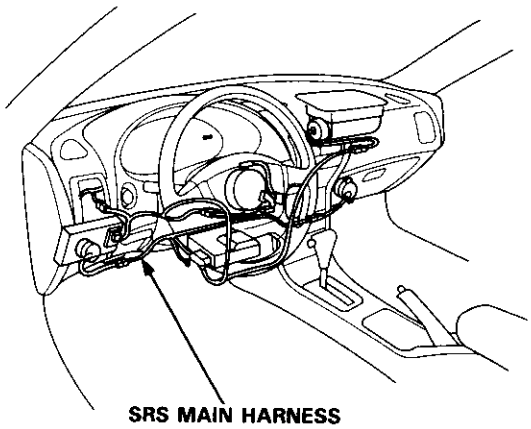

NOTE: The original radio has a coded theft protection circuit. Be sure to get the customer's code number before
— disconnecting the battery.
— removing the No. 32 (7.5 A) fuse from the under-hood fuse/relay box.
— removing the radio.
After service, reconnect power to the radio and turn it on. When the word "CODE" is displayed, enter the customer's 5-digit code to restore radio operation.

1. Disconnect the negative cable from the battery.

2. Remove the dashboard lower cover and knee bolster (see page 23-70).

3. Disconnect the 5-P connector from the under-dash fuse/relay box and the 7-P connector from the main wire harness (see page 23-70).

4. Remove the steering column covers.

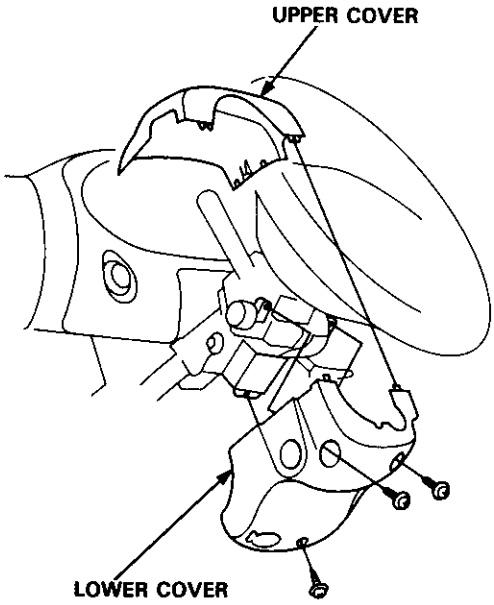

5. Insert the key and turn it to "0".

6. Remove the two bolts and replace the switch.

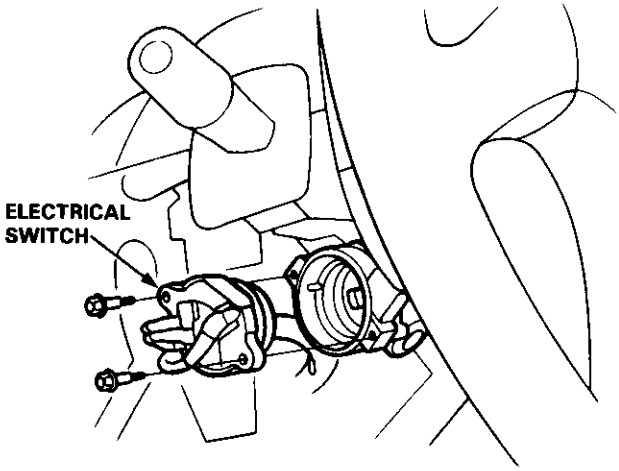

7. Install in the reverse order of removal.

Ignition Switch

Steering Lock Replacement

CAUTION:
- **All SRS electrical wiring harnesses are covered with yellow insulation.**
- **Before disconnecting any part of the SRS wire harness, connect the short connector(s).**
- **Replace the entire affected SRS harness assembly if it has an open circuit or damaged wiring.**

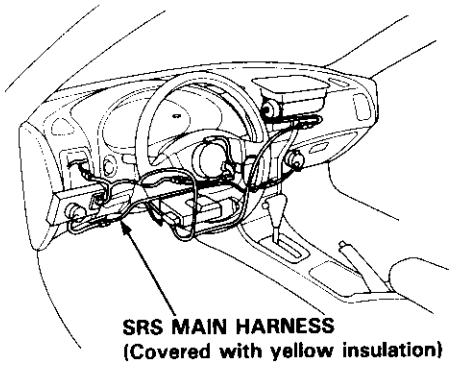

NOTE: The original radio has a coded theft protection circuit. Be sure to get the customer's code number before
- disconnecting the battery.
- removing the No. 32 (7.5 A) fuse from the under-hood fuse/relay box.
- removing the radio.

After service, reconnect power to the radio and turn it on. When the word "CODE" is displayed, enter the customer's 5-digit code to restore radio operation.

1. Disconnect the negative cable from the battery.
2. Remove the dashboard lower cover and knee bolster (see page 23-71).
3. Disconnect the 5-P connector from the under-dash fuse/relay box and the 7-P connector from the main wire harness (see page 23-71).
4. Remove the steering column covers (see page 23-71).
5. Remove the column holder mounting bolts and nuts.

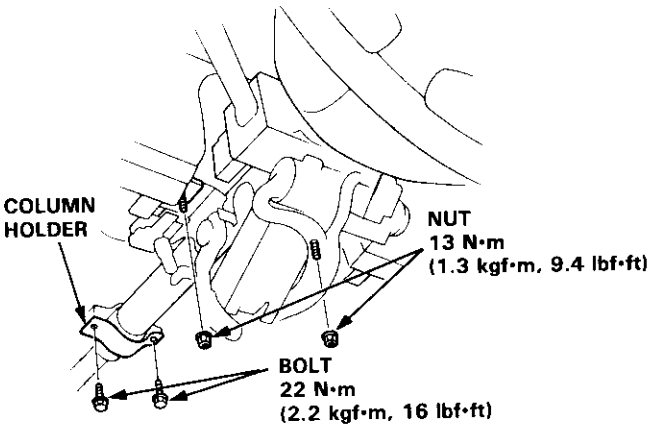

6. Lower the steering column assembly.
7. Center-punch each of the two shear bolts and drill their heads off with a 5 mm (3/16 in) drill bit.

   CAUTION: Do not damage the switch body when removing the shear bolts.

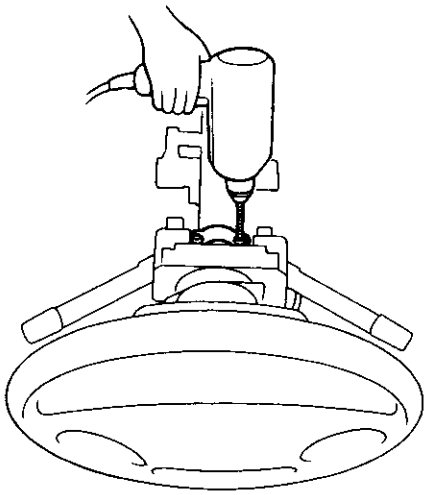

8. Remove the shear bolts from the switch body.
9. Install the new ignition switch without the key inserted.
10. Loosely tighten the new shear bolts.
11. Insert the ignition key and check for proper operation of the steering wheel lock and that the ignition key turns freely.
12. Tighten the shear bolts until the hex heads twist off.

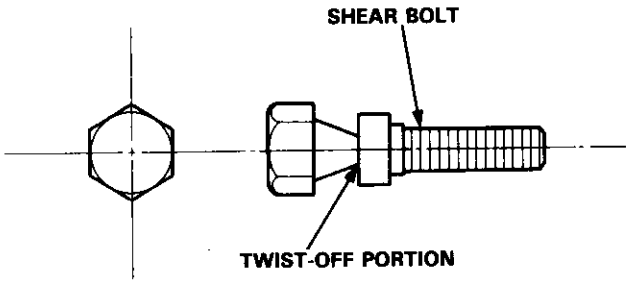

Component Location Index

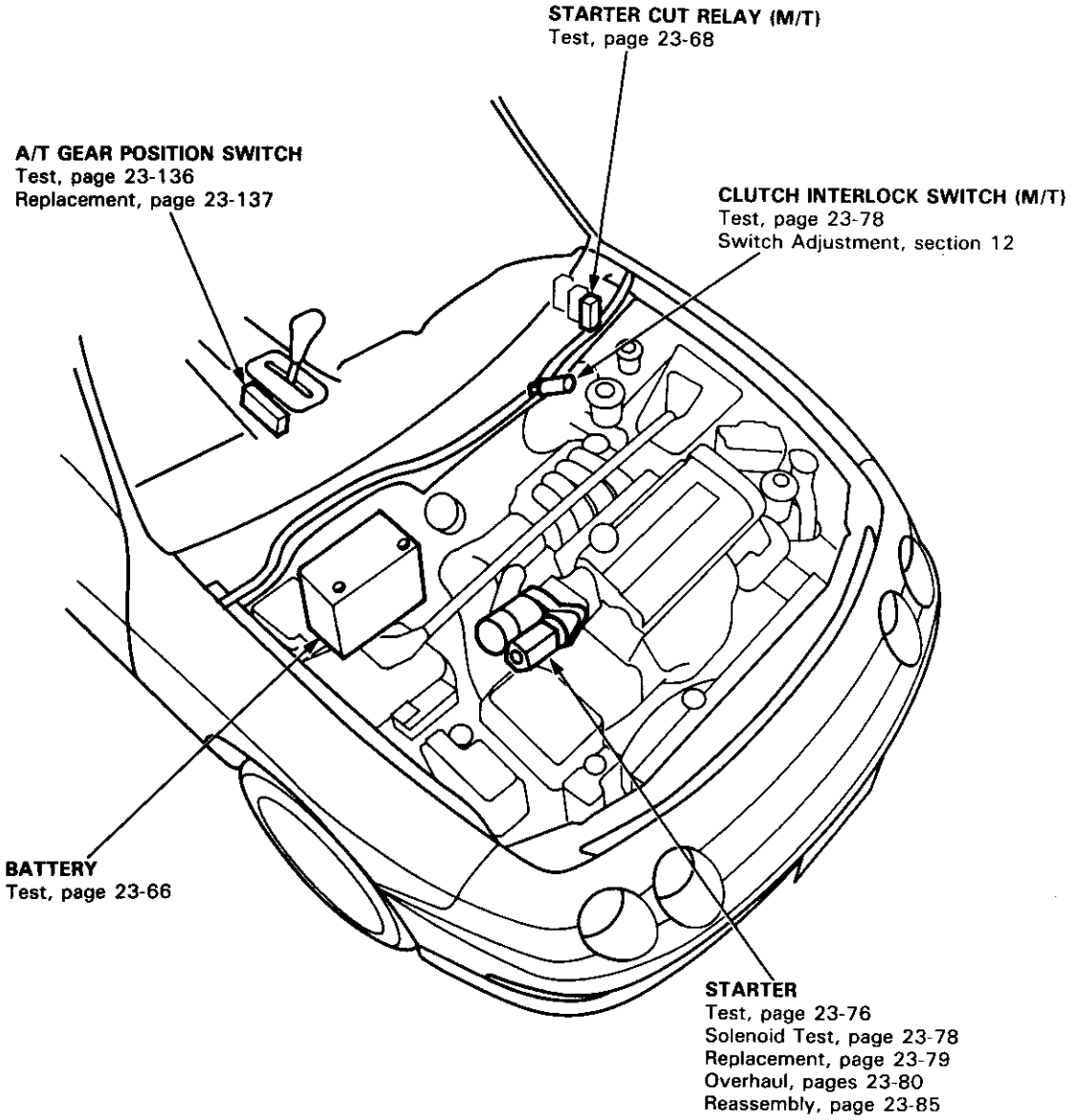

Circuit Diagram (M/T)

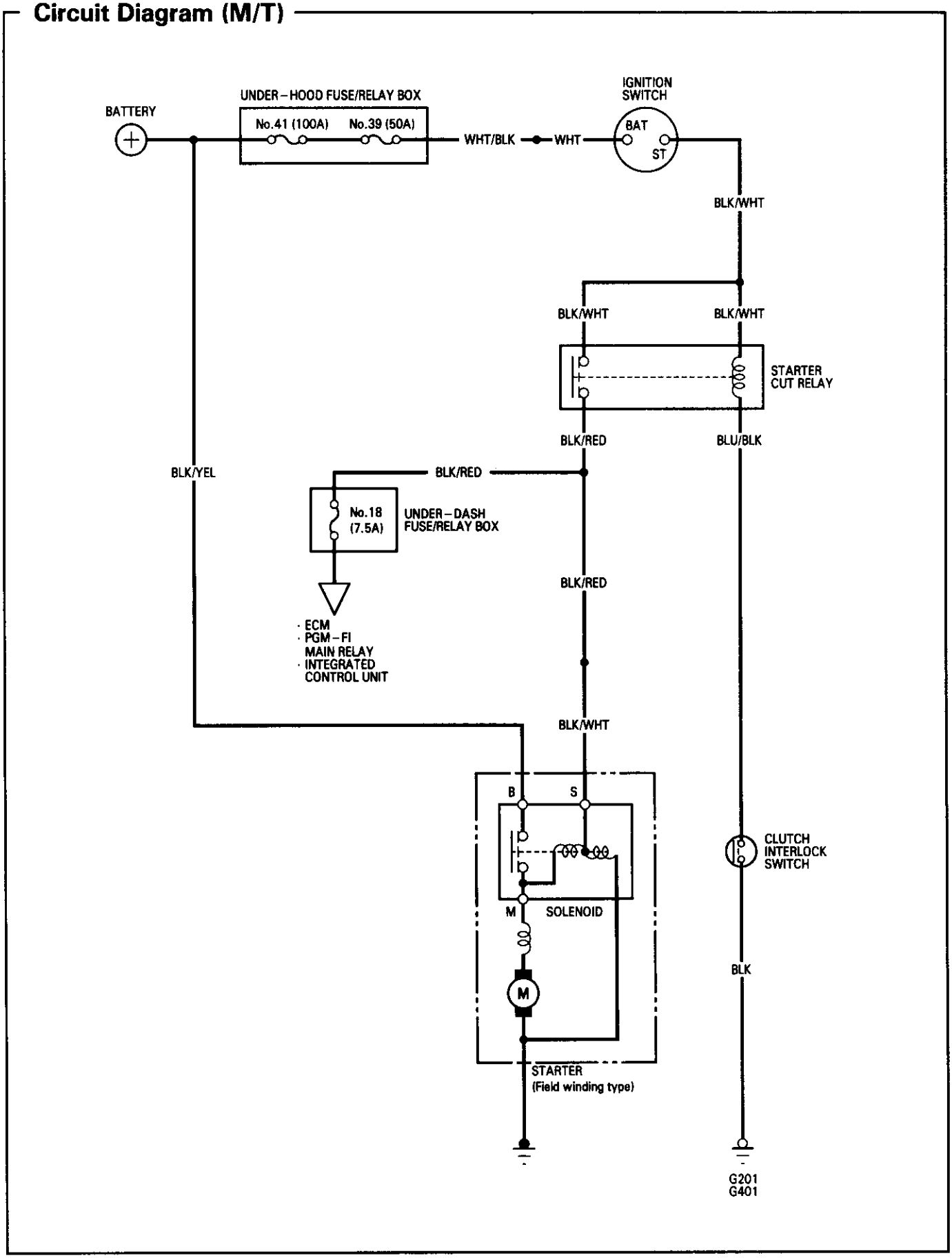

Circuit Diagram (A/T)

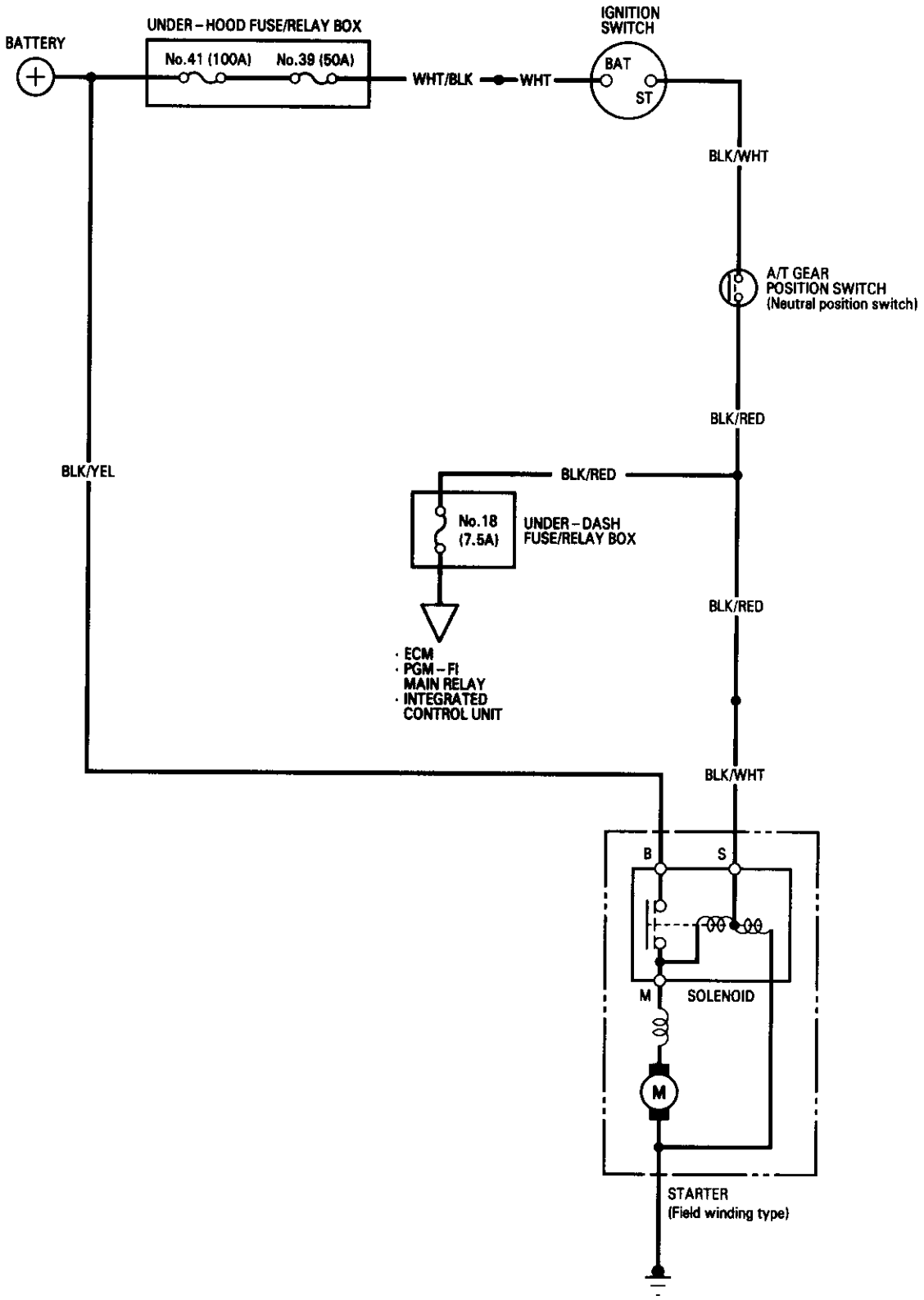

Starter Test

NOTE: The air temperature must be between 59 and 100°F (15 and 38°C) before testing.

Recommended Procedure:

- Use a starter system tester.
- Connect and operate the equipment in accordance with the manufacturer's instructions.
- Test and troubleshoot as described.

Alternate Procedure:

- Use the following equipment:
  - Ammeter, 0–400 A
  - Voltmeter, 0–20 V (accurate within 0.1 volt)
  - Tachometer, 0–1200 rpm
- Hook up voltmeter and ammeter as shown.

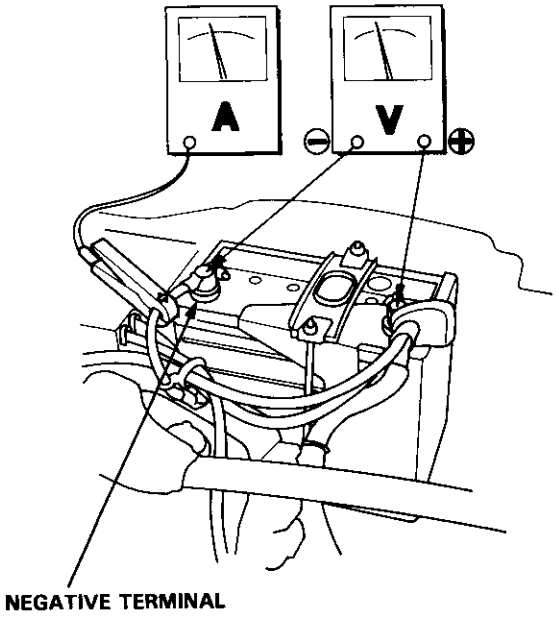

NOTE: After this test, or any subsequent repair, reset the ECM to clear any codes (see section 11).

Check Starter Engagement:

1. Disconnect the 2-P connector (ignition coil primary lead) from the distributor.

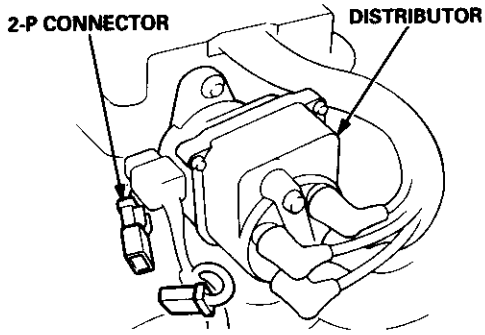

2. Press the clutch pedal all the way in (M/T), and turn the ignition switch to "Start". The starter should crank the engine.

   NOTE: On cars equipped with manual transmission, the engine will not crank unless the clutch pedal is fully depressed.

   If the starter does not crank the engine go to step 3.

3. Check the battery, battery positive cable, ground, and the wire connections for looseness and corrosion.

   Test again. If the starter still does not crank the engine, go to step 4.

4. Bypass the ignition switch circuit as follows (make sure the transmission is in neutral):
   Unplug the connector (BLK/WHT wire and solenoid terminal) from the starter. Then connect a jumper wire from the battery positive (+) terminal to the solenoid terminal. The starter should crank the engine.

   - If the starter still does not crank the engine, replace it and diagnose its internal problems.
   - If the starter cranks the engine, go to step 5.

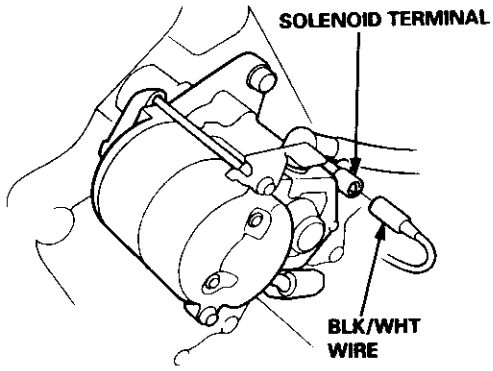

5. Check for an open in the BLK/WHT wire circuit between the starter and ignition switch, and connectors.

6. Check the ignition switch (see page 23-70).

7. On cars with automatic transmission, check the A/T gear position switch (neutral position switch) and connector. On cars with manual transmission, check the starter cut relay, clutch interlock switch, and connectors.

NOTE: Check the No. 39 (50 A) fuse in the under-hood fuse/relay box for the starter cut relay.

Check for Wear and Damage:

The starter should crank the engine smoothly and steadily. If the starter engages, but cranks the engine erratically, remove it. Inspect the starter, drive gear, and flywheel ring gear for damage.

- Check the drive gear overrunning clutch for binding or slipping when the armature is rotated with the drive gear held. Replace the gears if damaged.

Check Cranking Voltage and Current Draw:

Cranking voltage should be no less than 8.0 volts.
Current draw should be no more than 360 amperes.

If cranking voltage is too low, or current draw too high, check for:
- Fully charged battery
- Open circuit in starter armature commutator segments
- Starter armature dragging
- Shorted armature winding
- Excessive drag in engine

Check Cranking rpm:

Engine speed during cranking should be above 100 rpm.

If speed is too low, check for:

- Loose battery or starter teminals
- Excessively worn starter brushes
- Open circuit in commutator segments
- Dirty or damaged helical spline or drive gear
- Defective drive gear overrunning clutch

Check Starter Disengagement:

Press the clutch pedal all the way in (M/T), turn the ignition switch to "III" and release to "II".
The starter drive gear should disengage from the flywheel ring gear. When you release the key.

If the drive gear hangs up on the flywheel ring gear, check for:

- Solenoid plunger and switch malfunction
- Dirty drive gear assembly or damaged overrunning clutch

Clutch Interlock Switch Test

1. Remove the dashboard lower cover and knee bolster (see page 23-70), then disconnect the 2-P connector from the switch.

2. Check for continuity between the terminals according to the table.

Clutch Pedal \ Terminal	A	B
RELEASED		
PUSHED	○	○

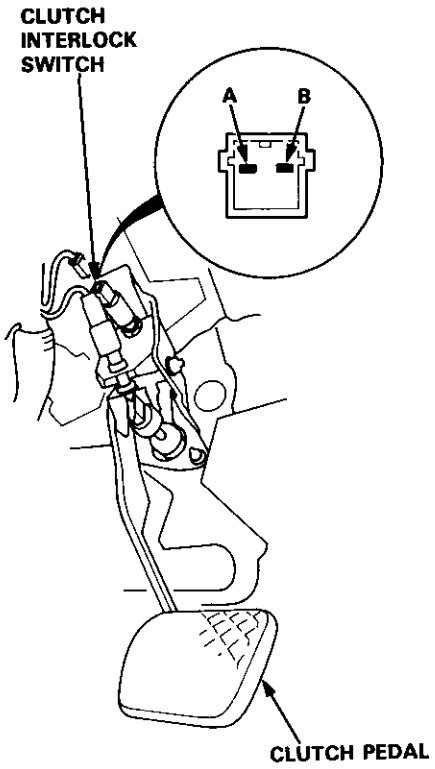

3. If necessary, replace the switch or adjust the switch position (see section 12).

Starter Solenoid Test

1. Check for continuity between the terminals according to the table.

Coil \ Terminal	M	S	Housing
HOLD-IN		○	○
PULL-IN	○	○	

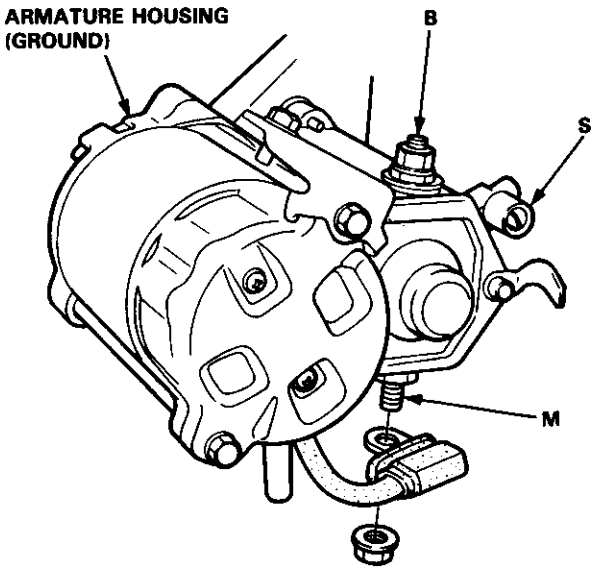

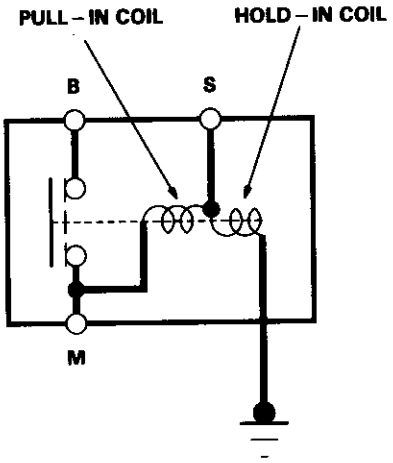

Starter Replacement

1. Disconnect the negative cable from the battery.
2. Remove the intake air duct.

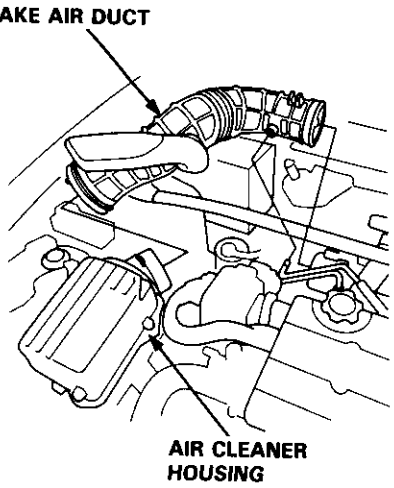

3. Remove the engine wire harness and starter cables from their brackets.

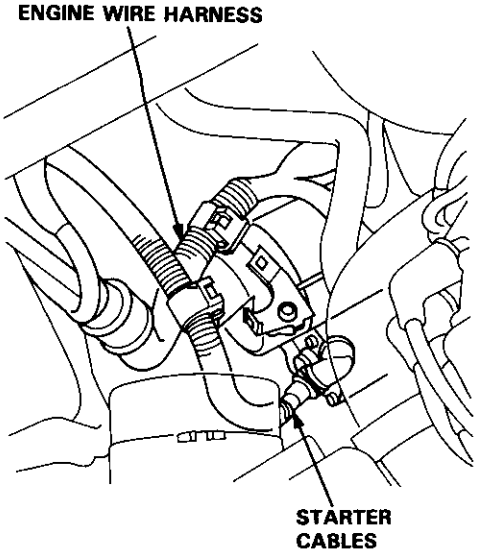

4. Disconnect the starter cable from the B terminal on the solenoid, then the BLK/WHT wire from the S terminal.
5. Remove the two bolts holding the starter, then remove the starter.

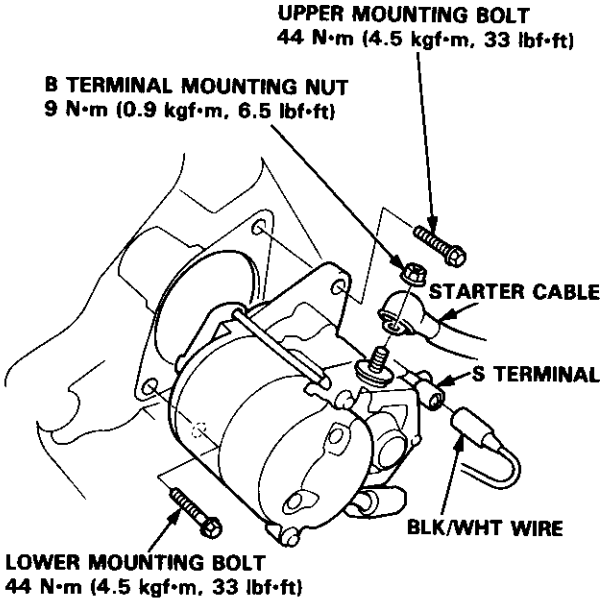

6. Install in the reverse order of removal.

Starter Overhaul

CAUTION: Disconnect the battery negative cable before removing the starter.

NOTE: The original radio has a coded theft protection citcuit. Be sure to get the customer's code number before
- disconnecting the battery.
- removing the No.3 2 (7.5 A) fuse from the under-hood fuse/relay box.
- removing the radio.

After service, reconnect power to the radio and turn it on. When the word "CODE" is displayed, enter the customer's 5-digit code to restore radio operation.

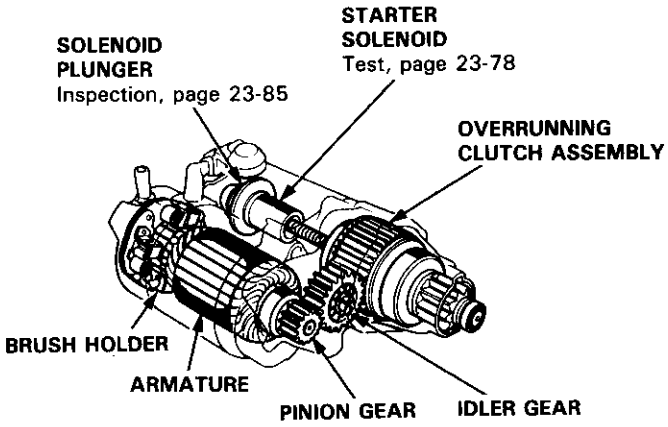

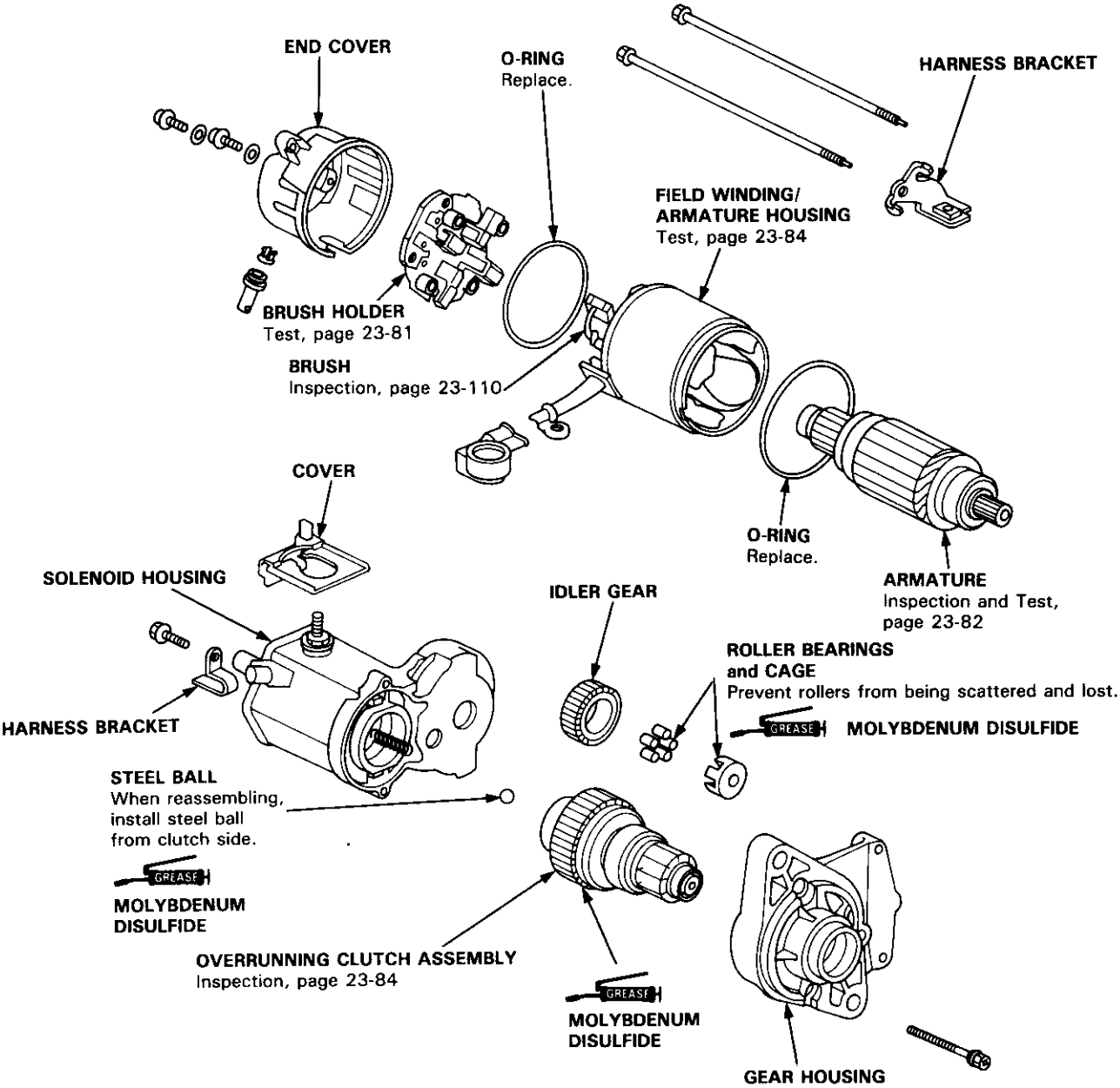

Starter Brush Holder Test

1. Check that there is no continuity between the ⊕ and ⊖ brush holders. If continuity exists, replace the brush holder assembly.

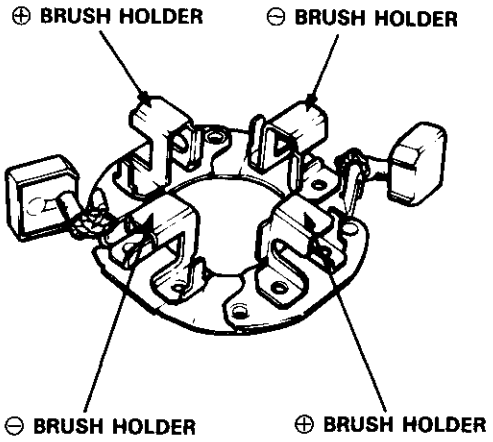

2. Insert the brush into the brush holder, and bring the brush into contact with the commutator, then attach a spring scale to the spring. Measure the spring tension at the moment the spring lifts off the brush.

   Spring Tension: 17.7–23.5 N (1.8–2.4 kgf, 4.0–5.3 lbf)

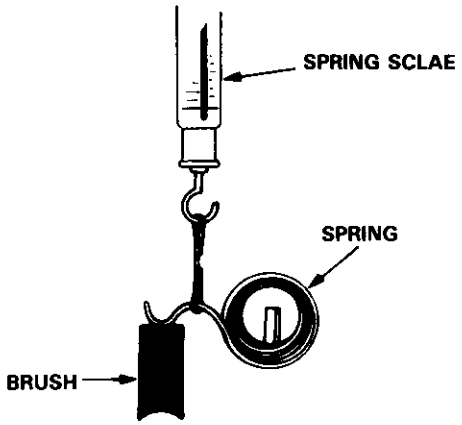

Starter Brush Inspection

Measure the brush length. If it is less than the service limit, replace the armature housing and brush holder assembly.

Brush Length
Standard (New): 15.0–15.5 mm (0.59–0.61 in)
Service Limit: 10.0 mm (0.39 in)

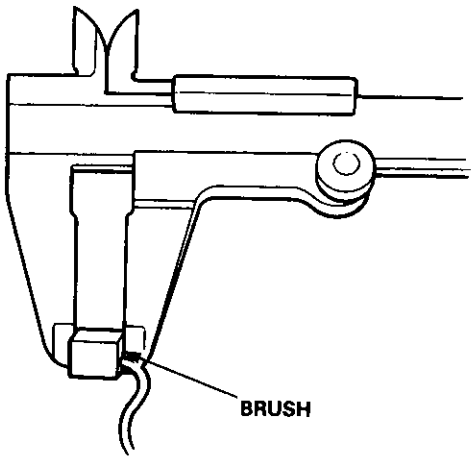

NOTE: To seat new brushes after installing them in their holders, slip a strip of #500 or #600 sandpaper, with the grit side up, over the commutator and smoothly rotate the armature. The contact surface of the brushes will be sanded to the same contour as the commutator.

Armature Inspection and Test

1. Inspect the armature for wear or damage due to contact with the field coil magnets.

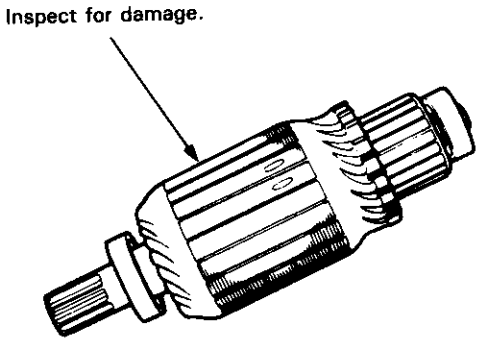

2. A dirty or burnt commutator surface may be resurfaced with emery cloth or a lathe within the following specifications.

Commutator Diameter
Standard (New): 29.9–30.0 mm (1.17–1.18 in)
Service Limit: 29 mm (1.14 in)

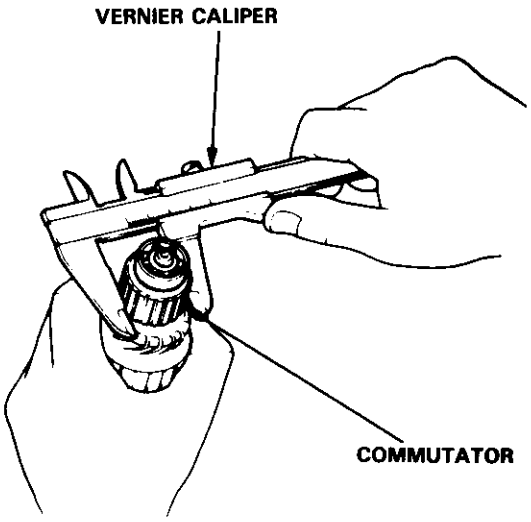

Commutator Runout
Standard (New): 0–0.02 mm (0–0.0008 in)
Service Limit: 0.05 mm (0.002 in)

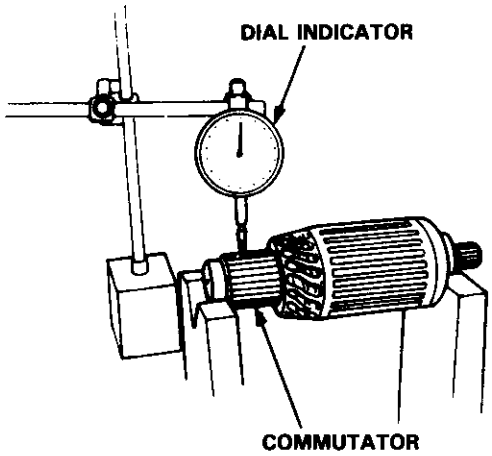

3. If the commutator runout and diameter are within limits, check the commutator for damage or for carbon dust or brass chips between the segments.

4. If the surface is dirty, recondition it with #500 or #600 sandpaper.

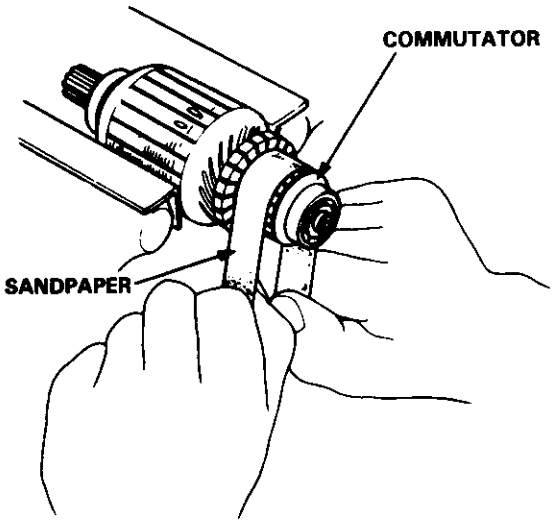

5. Check for mica depth. If necessary, undercut mica with a hacksaw blade to achieve proper depth.

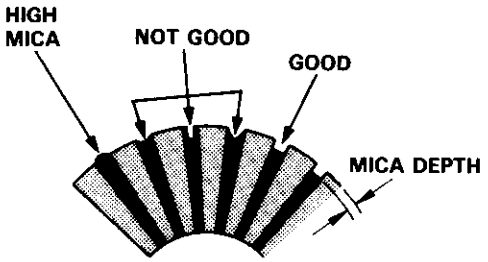

Commutator Mica Depth
Standard (New): 0.5–0.8 mm (0.02–0.03 in)
Service Limit: 0.2 mm (0.008 in)

6. Check for continuity between the segments of the commutator. If an open circuit exists between any segments, replace the armature.

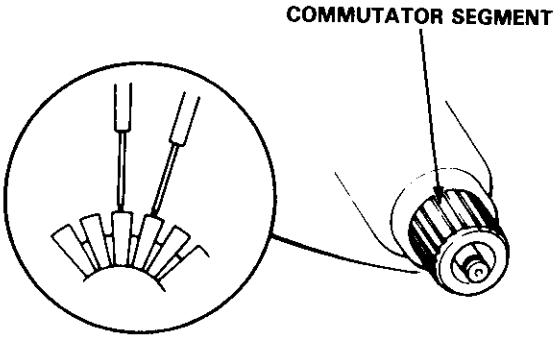

7. Place the armature on an armature tester. Hold a hacksaw blade on the armature core.

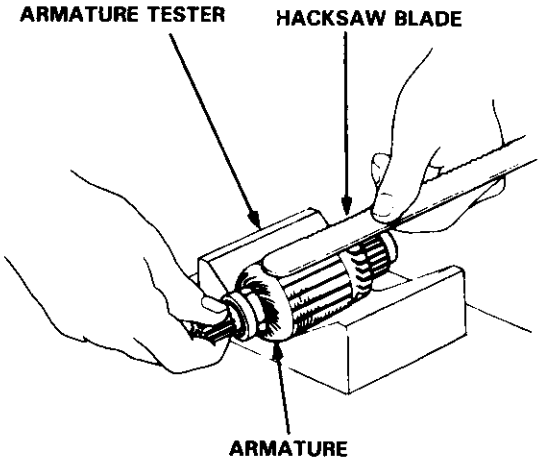

If the blade is attracted to the core or vibrates while the core is turned, the armature is shorted. Replace the armature.

8. Check with an ohmmeter that no continuity exists between the commutator and armature coil core, and between the commutator and armature shaft. If continuity exists, replace the armature.

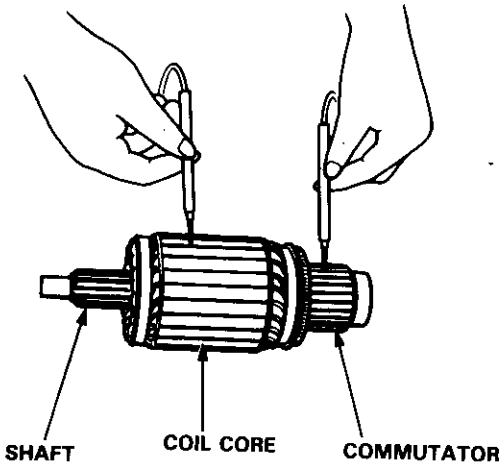

Starter Field Winding Test

1. Check for continuity between the brushes. If there's no continuity, replace the armature housing.

2. Check for continuity between each brush and the armature housing (ground). If continuity exists, replace the armature housing.

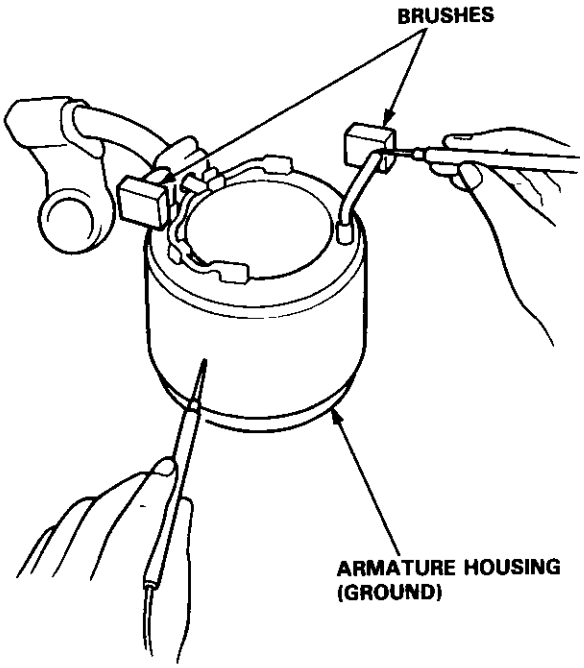

Overrunning Clutch Inspection

1. Slide the overrunning clutch along the shaft. Does it move freely? If not, replace it.

2. Rotate the overrunning clutch both ways. Does it lock in one direction and rotate smoothly in reverse? If it does not lock in either direction or it locks in both directions, replace it.

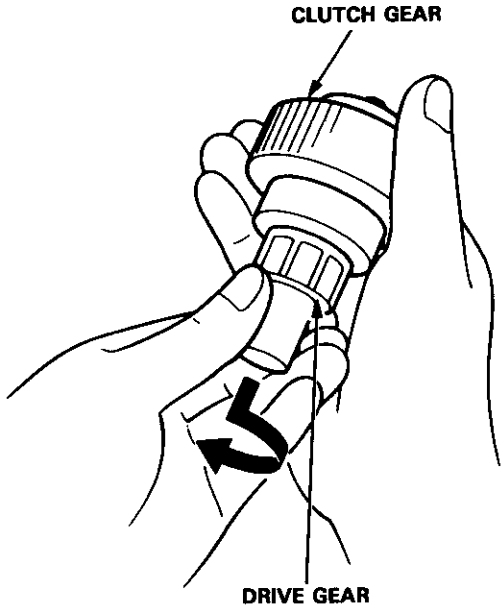

3. If the starter drive gear is worn or damaged, replace the overrunning clutch assembly; the gear is not available separately.

4. Check the condition of the flywheel or torque converter ring gear if the starter drive gear teeth are damaged.

Solenoid Plunger Inspection

Check the contact points and the face of the starter solenoid plunger for burning, pitting or any other defects. If surfaces are rough, recondition them with a strip of #500 or #600 sandpaper.

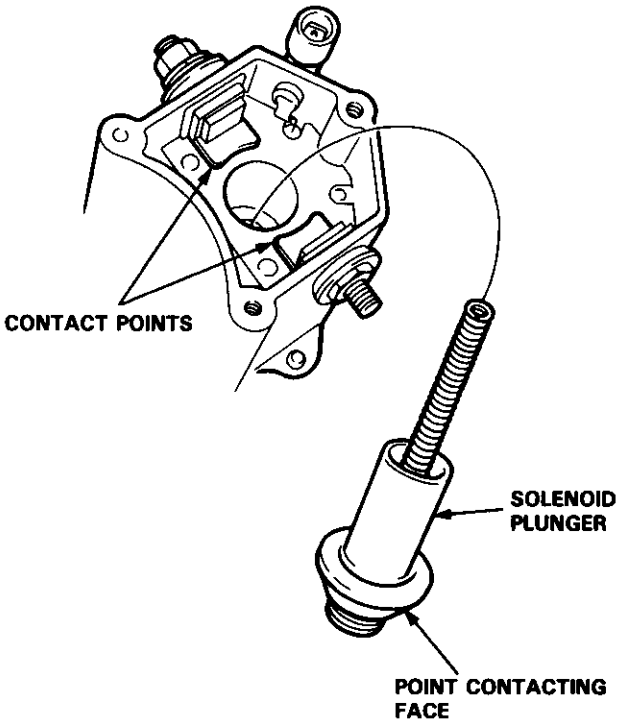

Starter Reassembly

Reassemble the starter in the reverse order of disassembly.

1. Pry back each brush spring with a screwdriver, then position the brush about halfway out of its holder, and release the spring to hold it there.

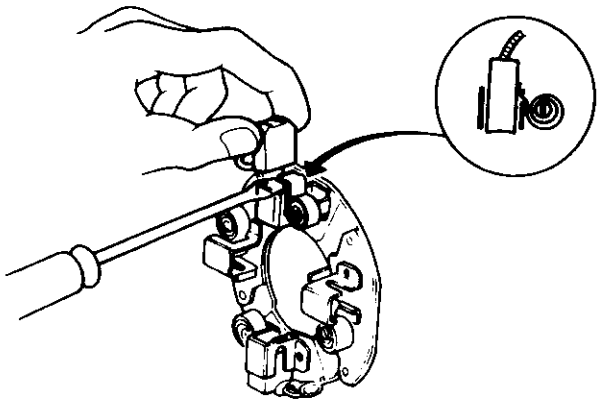

2. Install the armature in the housing. Next pry back each brush spring again and push the brush down until it seats against the commutator, then release the spring against the end of the brush.

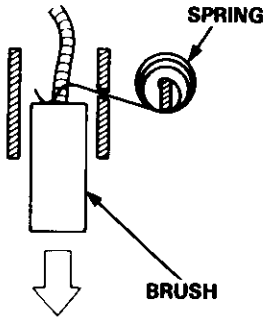

3. Install the end cover on the brush holder.

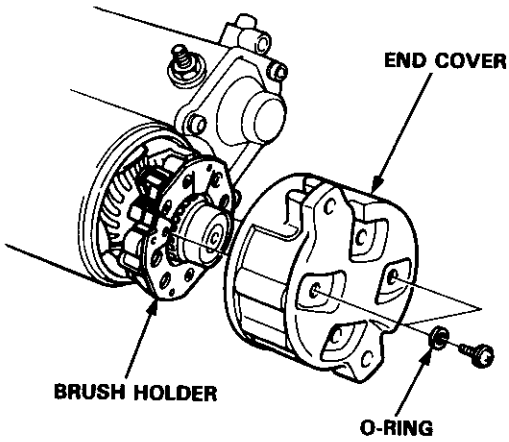

Performance Test

NOTE: Before starting the following checks, disconnect the wire from terminal M, and make a connection as described below using as heavy a wire as possible (preferably equivalent to the wire used for the car).

Pull-in Coil Test:

Connect the battery as shown. If the starter pinion pops out, it is working properly.

CAUTION: Do not leave the battery connected for more than 10 seconds.

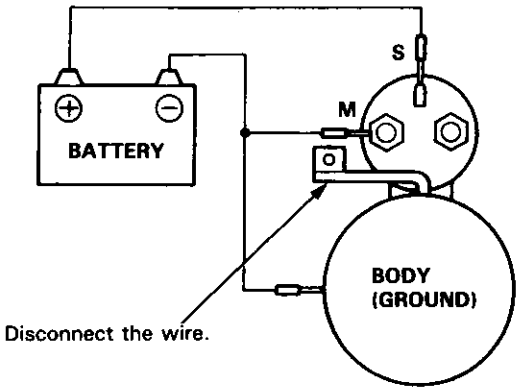

Hold-in Coil Test:

Disconnect the battery from the M terminal. If the pinion does not retract, the hold-in coil is working properly.

CAUTION: Do not leave the battery connected for more than 10 seconds.

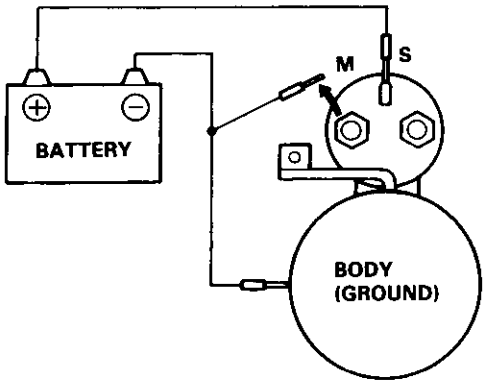

Retracting Test:

Disconnect the battery negative cable. If the pinion retracts immediately, it is working properly.

NOTE: Do not leave the battery connected for more than 10 seconds.

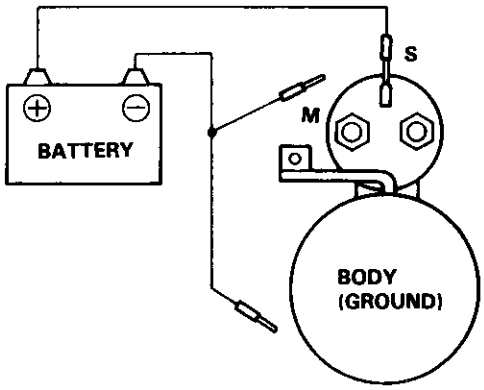

Starter No-load Test:

1. Clamp the starter firmly in a vise.
2. Connect the starter to the battery as shown and confirm that the motor starts and keeps rotating.

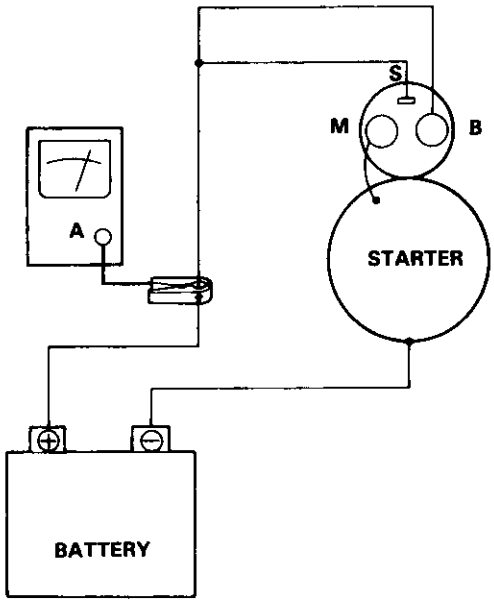

3. If the electric current and motor speed meet the specifications when the battery voltage is at 11 V, the starter is working properly.

   Specifications: 90 A or less (Electric current), 3000 rpm or more (Motor speed)

Component Location Index

IGNITION TIMING CONTROL SYSTEM
- Troubleshooting, section 11
- Inspection and setting, page 23-89

DISTRIBUTOR
Top End Inspection, page 23-91
Removal/Installation, pages 23-91, 92
Overhaul, page 23-93
Reassembly, page 23-94
Ignition Coil Test/Replacement, page 23-95
Ignition Control Module (ICM) Input Test, page 23-96

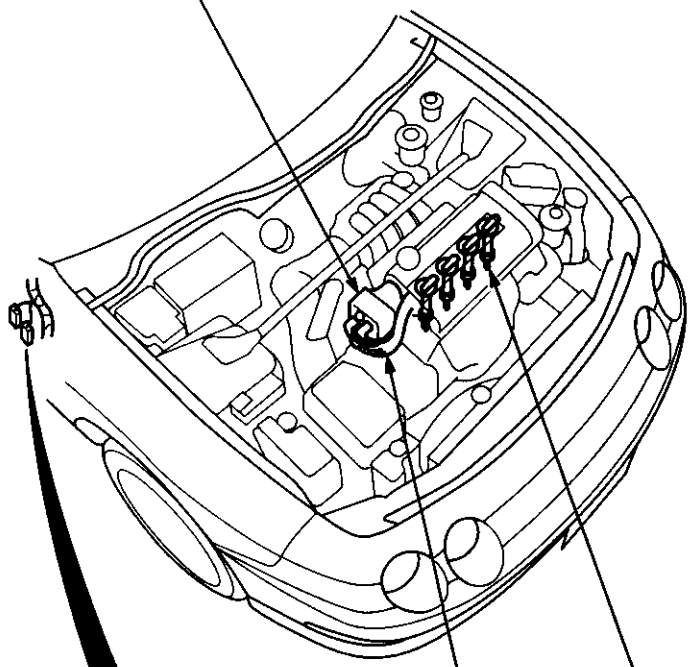

SPARK PLUGS
Inspection, Page 23-97

IGNITION WIRES
Inspection, page 23-94

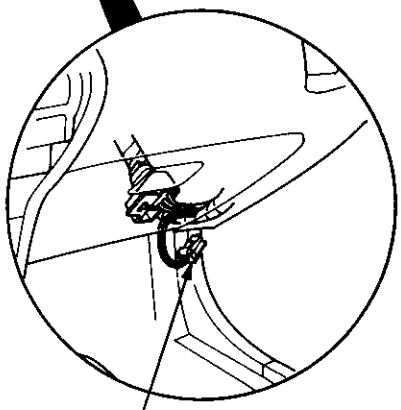

SERVICE CHECK CONNECTOR (2-P)
[Wire colors: BRN/WHT and BLK]

Ignition System

Circuit Diagram

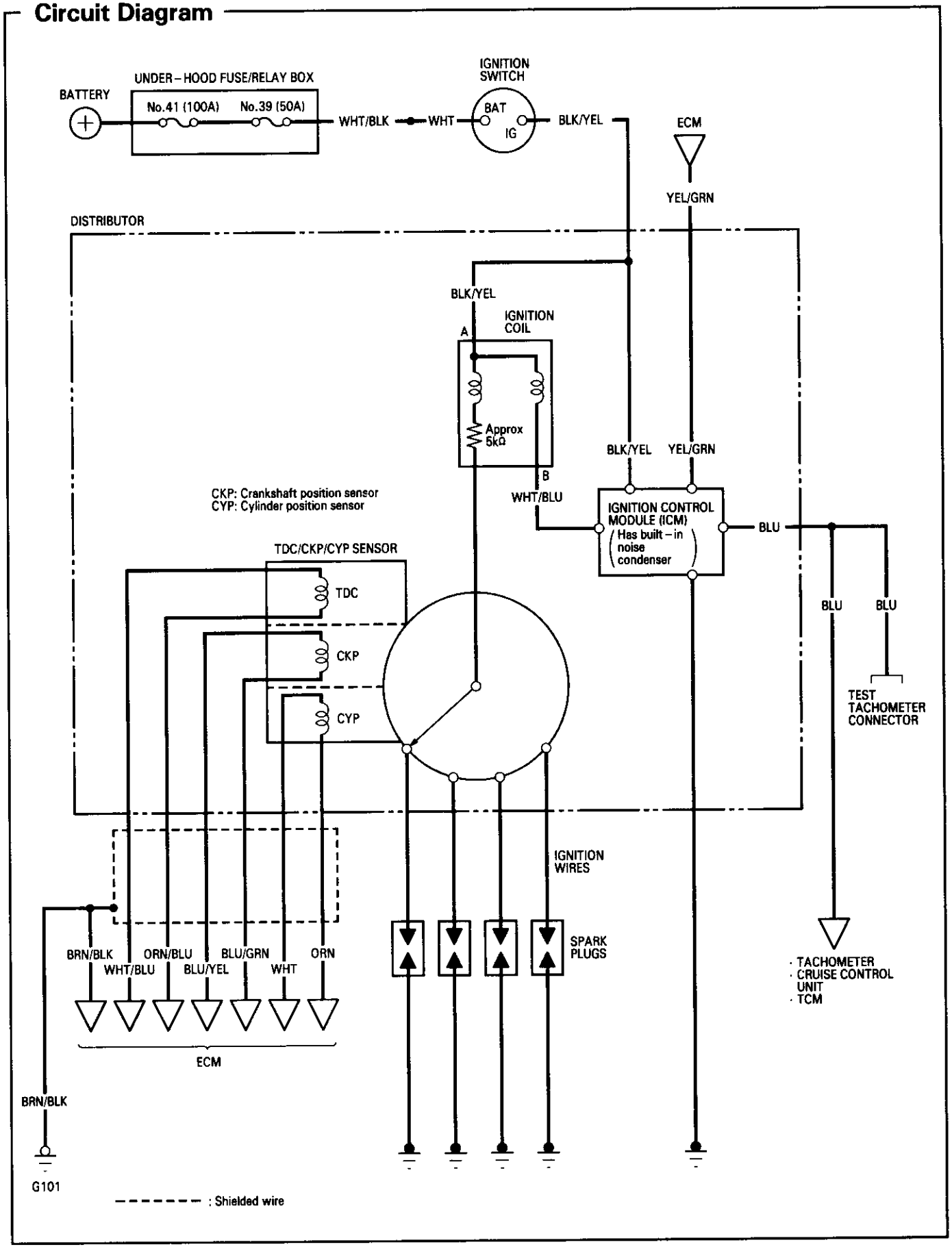

Ignition Timing Inspection and Setting

1. Start the engine. Hold the engine at 3,000 rpm with no load (A/T in N or P position, M/T in neutral) until the radiator fan comes on, then let it idle.

2. Pull out the service check connector located behind the right kick panel. Connect the BRN/WHT and BLK terminals with the SCS short connector.

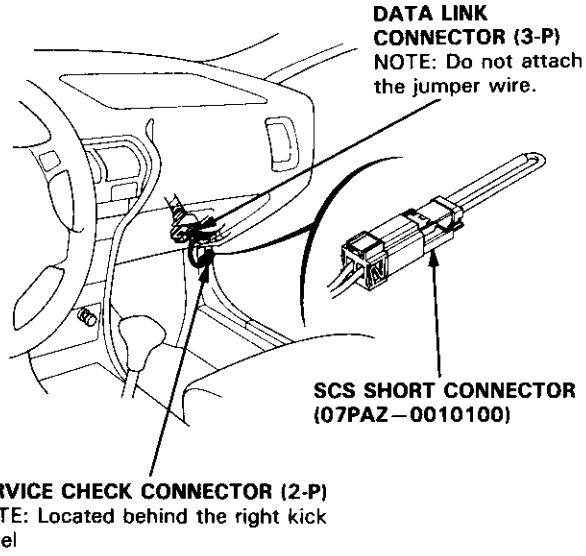

3. Connect a timing light to the No.1 ignition wire and point it toward the pointer on the timing belt cover.

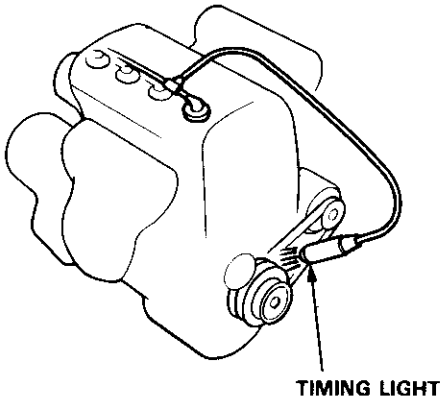

4. Adjust ignition timing, if necessary, to the following specifications:

   Ignition Timing:
   16 ± 2 BTDC (RED) at 750 ± 50 rpm in neutral

NOTE:
- Shift lever must be in neutral.
- All electrical systems should be turned OFF.

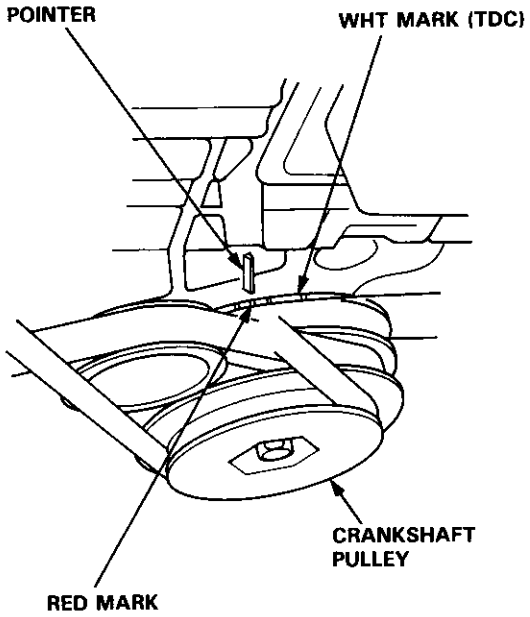

(cont'd)

Ignition Timing Inspection and Setting (cont'd)

5. To adjust ignition timing, loosen the distributor mounting bolts, and turn the distributor housing counterclockwise to advance the timing, or clockwise to retard the timing.

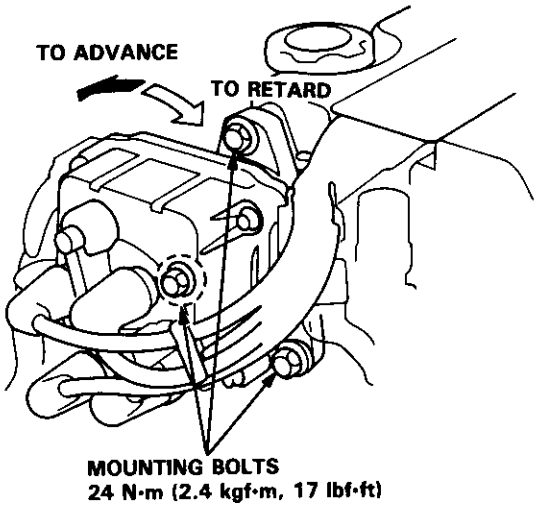

6. Tighten the adjusting bolts and recheck the timing.

7. Remove the SCS short connector from the service check connector.

Idle Speed Inspection

1. Shift to neutral or [P] and start the engine. Hold the engine at 3,000 rpm with no load until the radiator fan comes on, then let it idle.

2. Connect a tachometer to the test tachometer connector.

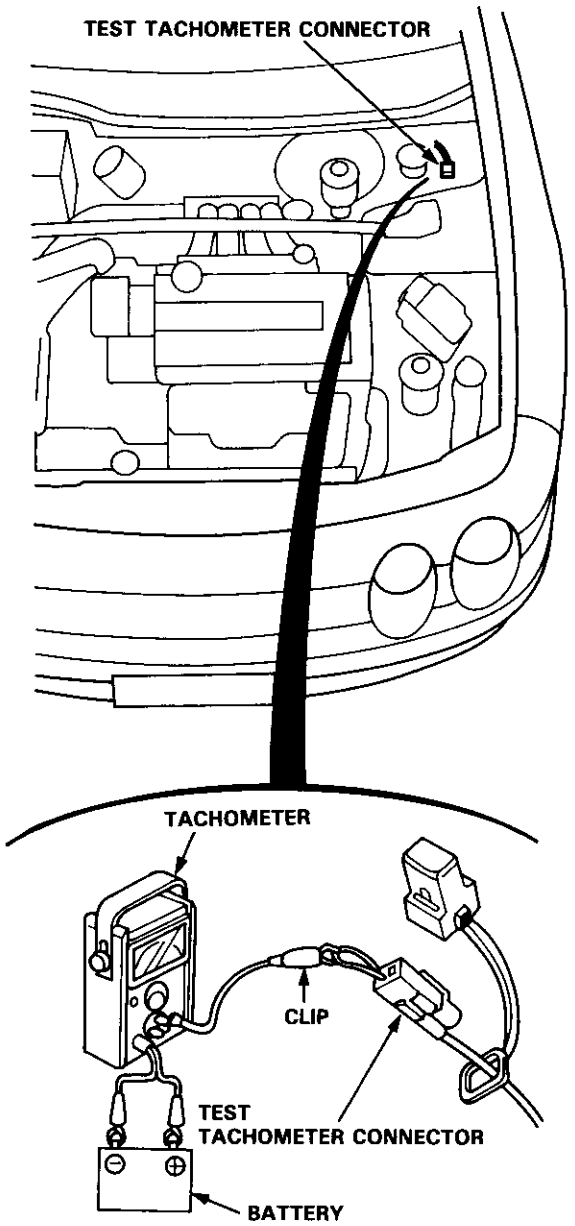

Idle speed
M/T: 750 ± 50 rpm in neutral
A/T: 750 ± 50 rpm in [N] or [P]

NOTE: All electrical systems should be turned OFF.

3. Adjust the idle speed if necessary (see section 11).

Distributor Top End Inspection

1. Check for rough or pitted rotor and cap terminals.
2. Scrape or file off the carbon deposits.
   Smooth the rotor terminal with an oil stone or #600 sandpaper if rough.
3. Check the distributor cap for cracks, wear, and damage. If necessary, clean or replace it.

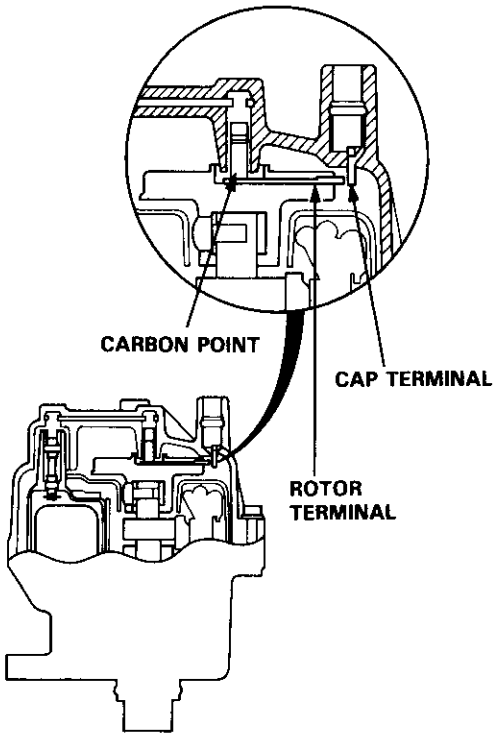

Distributor Removal

1. Disconnect the 2-P and 8-P connectors from the distributor.
2. Disconnect the ignition wires from the distributor cap.

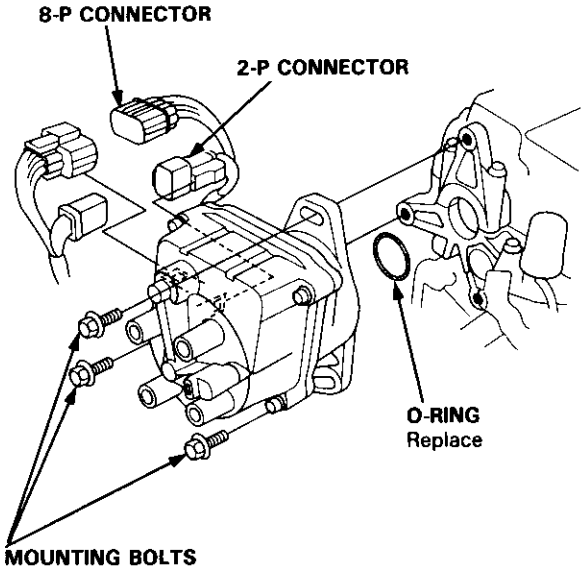

3. Remove the distributor mounting bolts, then remove the distributor from the cylinder head.

Distributor Installation

1. Coat a new O-ring with engine oil, then install it.

2. Slip the distributor into position.

   NOTE: The lugs on the end of the distributor and its mating grooves in the camshaft end are both offset to eliminate the possibility of installing the distributor 180° out of time.

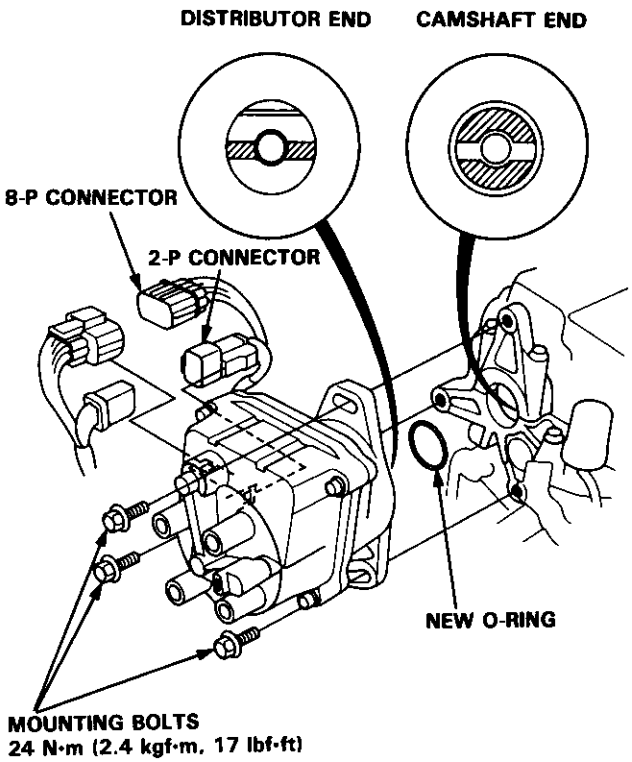

3. Install the mounting bolts and tighten them temporarily.

4. Connect the 2-P and 8-P connectors to the distributor.

5. Connect the ignition wires as shown.

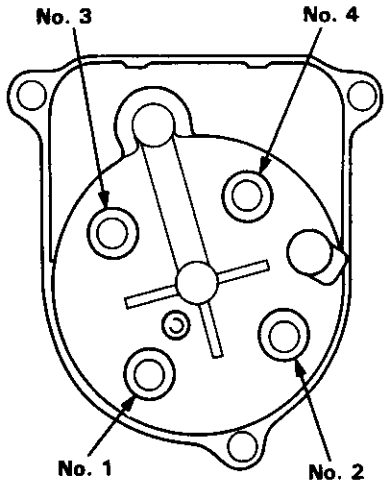

6. Set the timing with a timing light (see page 23-89).

7. After setting the timing, tighten the mounting bolts.

Distributor Overhaul

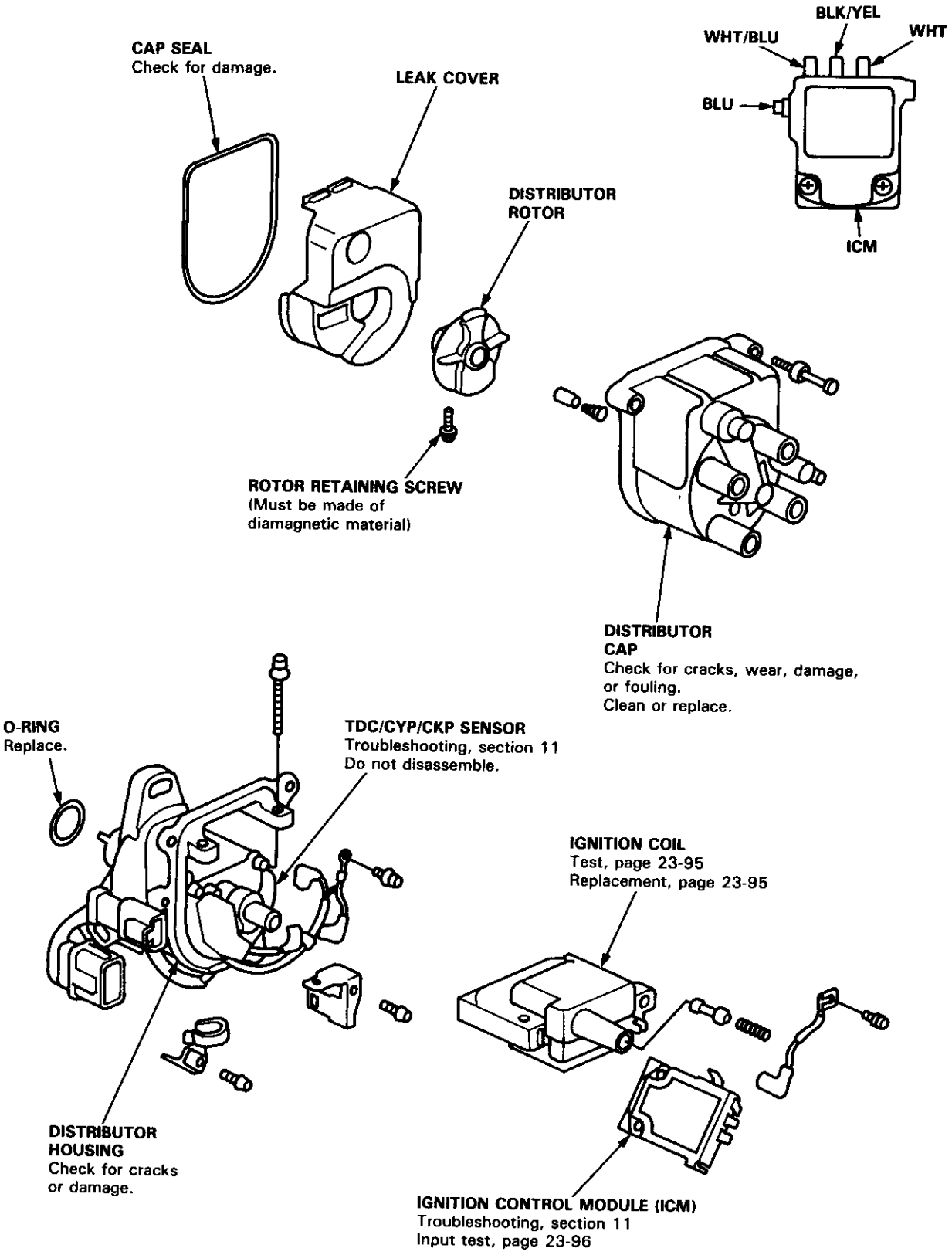

Distributor Reassembly

1. When reassembling the distributor, install the distributor rotor so on the shaft that it faces in the direction shown (toward the No. 1 cylinder).

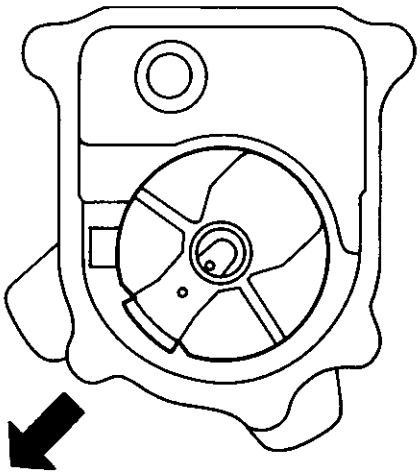

2. Align the index mark on the distributor housing with the index mark on the end of the shaft.

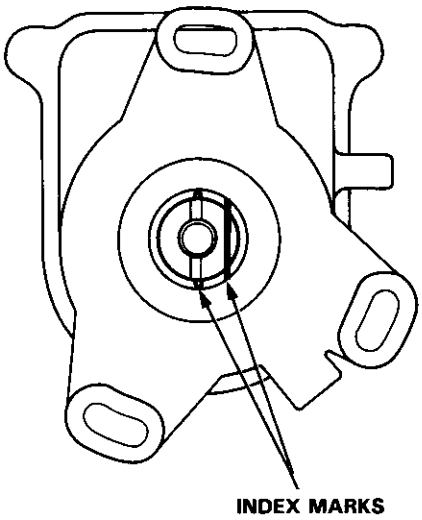

Ignition Wire Inspection and Test

CAUTION: Carefully remove the ignition wires by pulling on the rubber boots. Do not bend the wires; you might break them inside.

1. Check the condition of the wire terminals. If any terminal is corroded, clean it, and if it is broken or distorted, replace the wire.

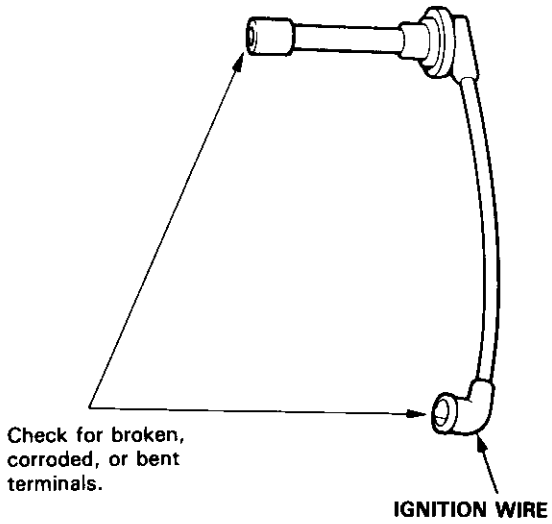

2. Connect ohmmeter probes and measure resistance.

   Ignition Wire Resistance:
   25 kΩ max. at 68°F (20°C)

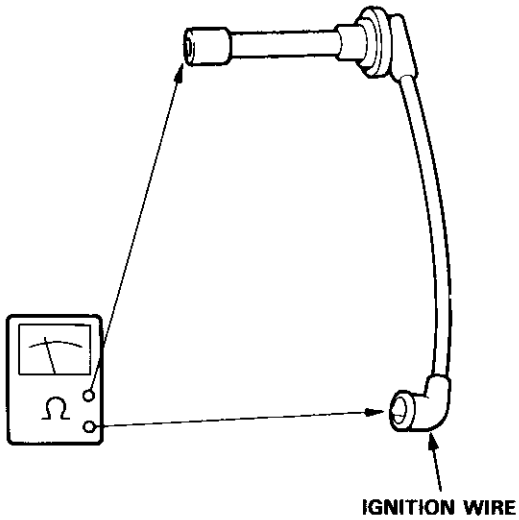

3. If resistance exceeds 25 kΩ, replace the ignition wire.

Ignition Coil Test

1. With the ignition switch OFF, remove the distributor cap.

2. Remove the two screws to disconnect the BLK/YEL and WHT/BLU wires from terminals A (+) and B (−) respectively.

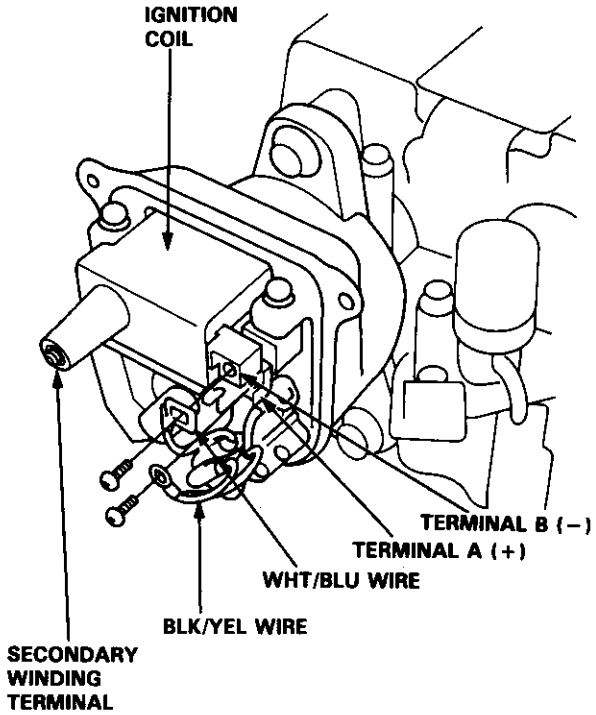

3. Using an ohmmeter, measure resistance between the terminals. Replace the coil if the resistance is not within specifications.

   NOTE: Resistance will vary with the coil temperature; specifications are at 68°F (20°C)

   Primary Winding Resistance
   (Between the A and B terminals): 0.6−0.8 ohms
   Secondary Winding Resistance
   (Between the A and secondary winding terminals): 12.8−19.2 kΩ

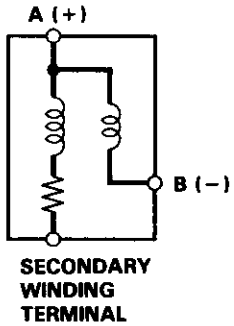

Ignition Coil Replacement

1. With the ignition switch OFF, remove the distributor cap, rotor, and cap seal, then remove the leak cover.

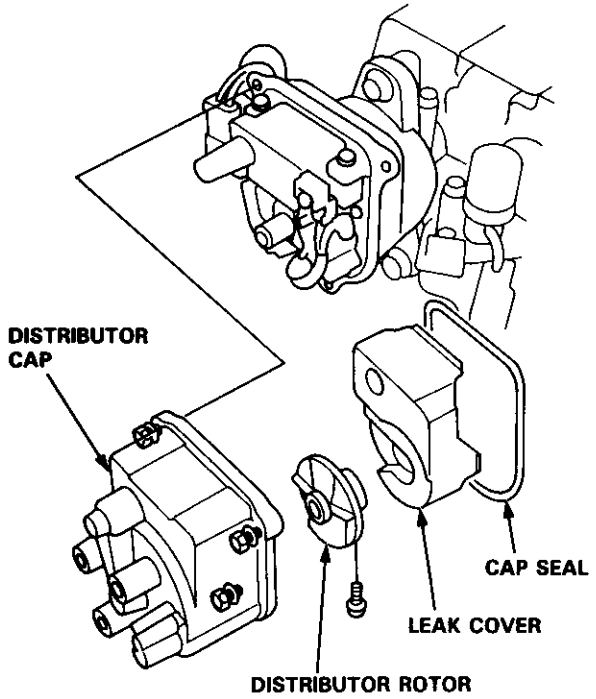

2. Remove the two screws to disconnect the BLK/YEL and WHT/BLU wires from the coil.

3. Remove the two screws and slide the ignition coil out of the distributor housing.

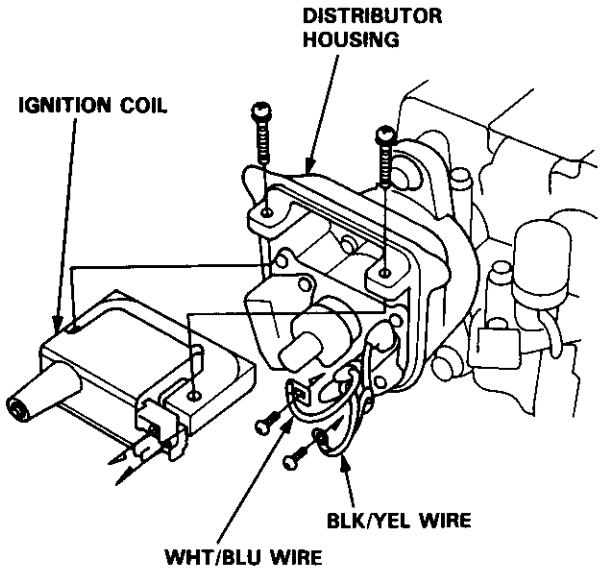

Ignition Control Module (ICM) Input Test

NOTE:
- See section 11 if the malfunction indicator lamp (MIL) blinks.
- Perform an input test for the ignition control module (ICM) after finishing the fundamental tests for the ignition system and the fuel and emissions systems.
- The tachometer should operate normally.

1. Remove the distributor cap, the distributor rotor, and the leak cover.

2. Disconnect the BLK/YEL, WHT/BLU, YEL/GRN, and BLU wires from the ICM.

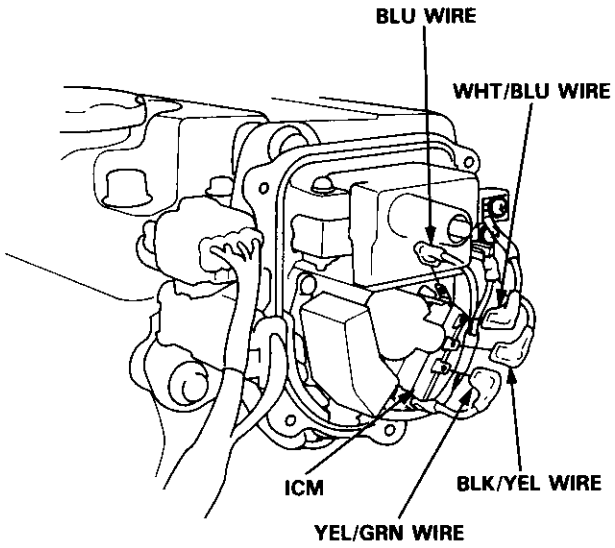

3. Turn the ignition switch ON. Check for voltage between the BLK/YEL wire and body ground. There should be battery voltage.

   - If there is no battery voltage, check the BLK/YEL wire between the ignition switch and the ICM.
   - If there is battery voltage, go to step 4.

4. Turn the ignition switch ON. Check for voltage between the WHT/BLU wire and body ground. There should be battery voltage.

   - If there is no battery voltage, check:
     - Ignition coil
     - WHT/BLU wire between the ignition coil and the ICM
   - If there is battery voltage, go to step 5.

5. Check the YEL/GRN wire between the ECM and the ICM.

6. Check the BLU wire between the tachometer and the ICM.

7. If all tests are normal, replace the ICM.

Spark Plug Inspection

1. Inspect the electrodes and ceramic insulator for:

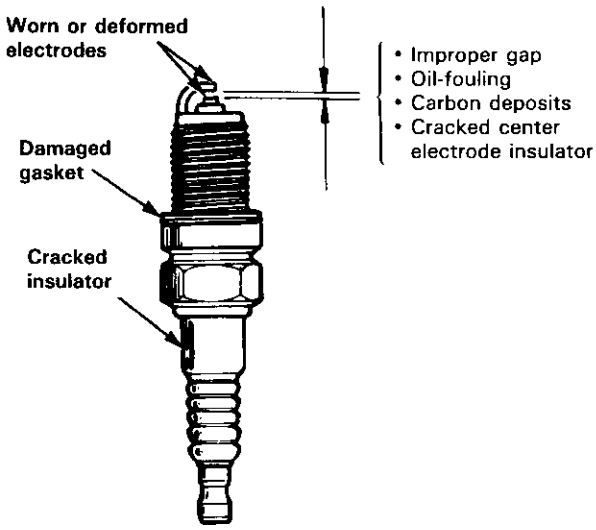

Burned or worn electrodes may be caused by:
- Advanced ignition timing
- Loose spark plug
- Plug heat range too low
- Insufficient cooling

Fouled plug may be caused by:
- Retarded ignition timing
- Oil in combustion chamber
- Incorrect spark plug gap
- Plug heat range too high
- Excessive idling/low speed running
- Clogged air cleaner element
- Deteriorated ignition coil or ignition wires

2. Check the electrode gap.

B18B1 engine:
- Adjust the gap with a suitable gapping tool.

Electrode Gap
Standard: 1.0—1.1 mm (0.039—0.043 in)

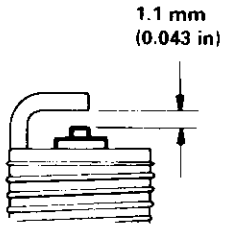

- Replace the plug if the center electrode is rounded as shown below:

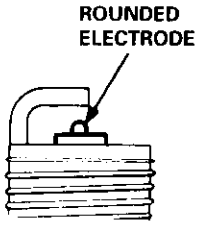

B18C1 engine:
- Make sure that the 1.4 mm (0.055 in) wire-type plug gauge does not go into the gap for the platinum tip plug. If the gauge goes into the gap, do not attempt to adjust the side electrode; replace the plug with a new one. Use only the spark plugs listed below.

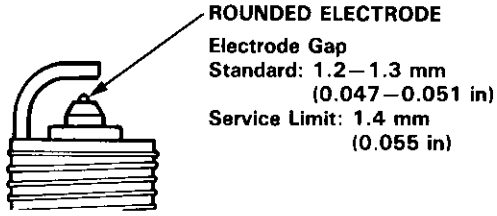

CAUTION: Do not use a blade-type plug gauge, it may damage the platinum tip of the center electrode.

Spark plugs for the B18B1 engine:

ZFR5F-11 (NGK) KJ16CR-L11 (Nippondenso)	For all normal driving
ZFR6F-11 (NGK) KJ20CR-L11 (Nippondenso)	For hot climates or continuous high speed driving

Spark plugs for the B18C1 engine:

PFR6G-13 (NGK) PK20PR-L13 (Nippondenso)	For all normal driving

3. Apply a small quantity of anti-seize compound to the plug threads.
Screw the plugs into the cylinder head finger-tight, then torque them to 18 N.m (1.8 kgf•m, 13 lbf•ft).

Component Location Index

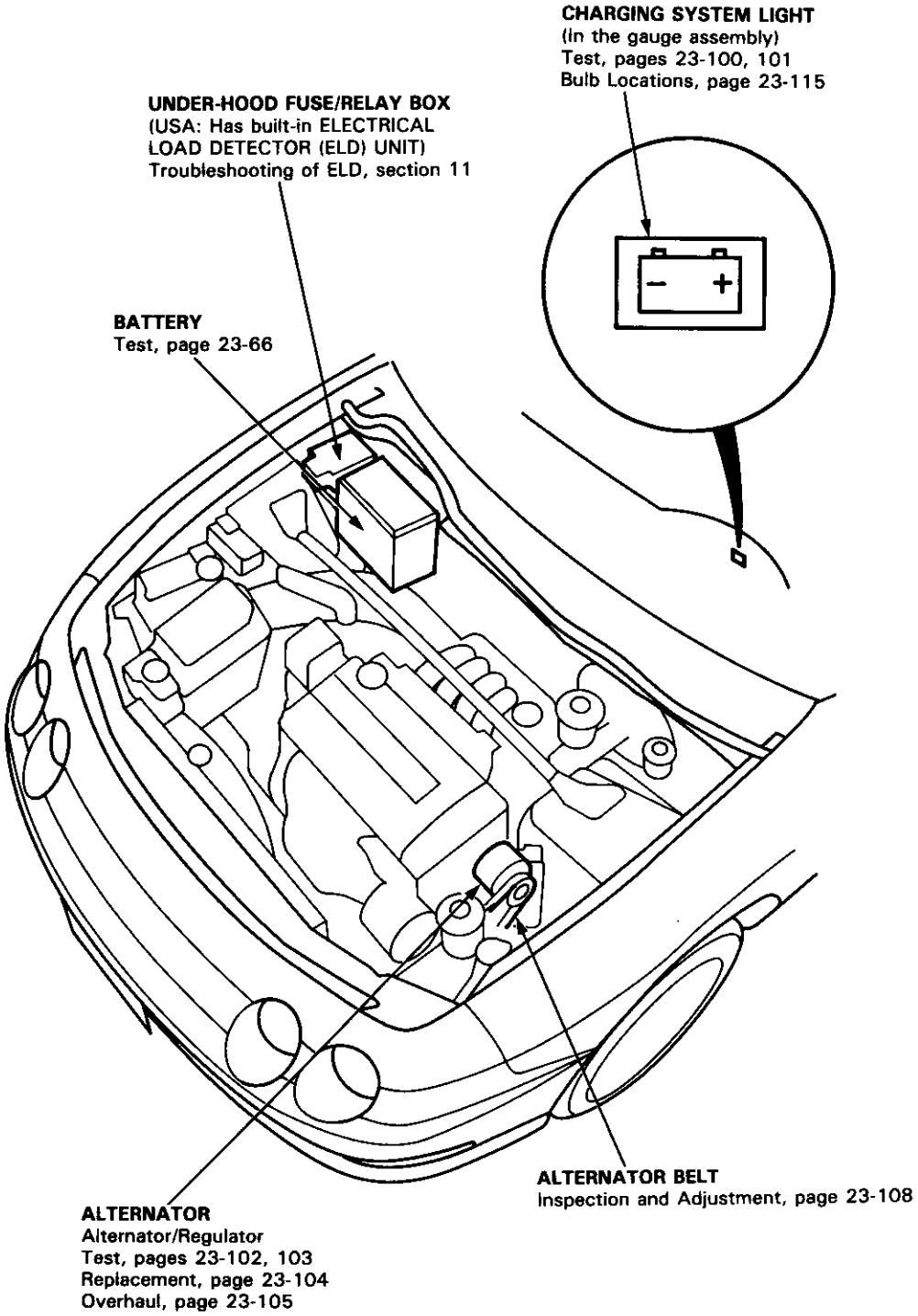

Circuit Diagram

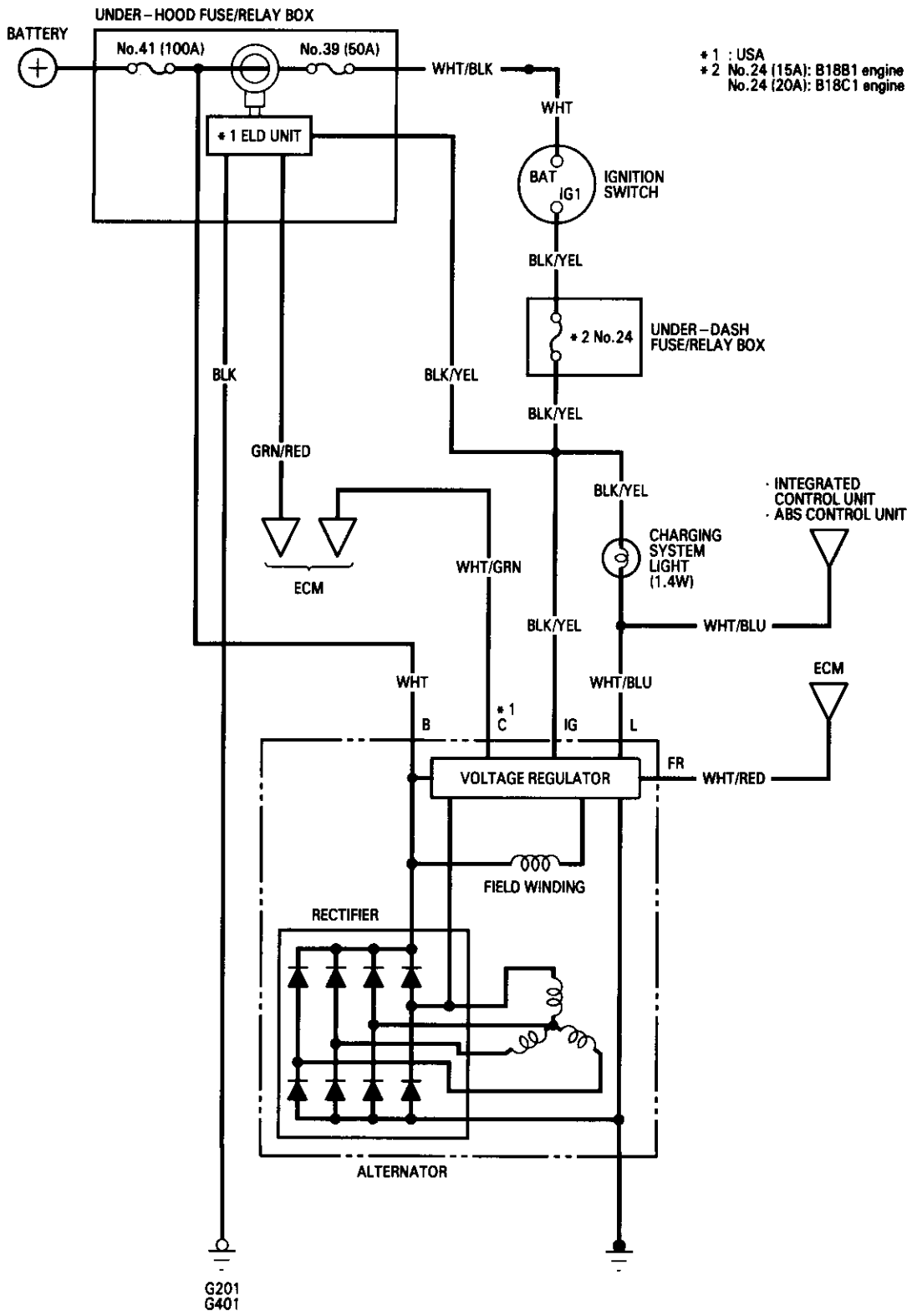

Troubleshooting

Before troubleshooting check
- tightness of the alternator belt (see page 23-108).
- that the malfunction indicator lamp (MIL) of the ECM does not blink. If it blinks, refer to section 11.

If the charging system light is on, or the battery is dead or low, perform the following tests in the order listed below:

1. Battery Test (see page 23-66)
2. Charging System Light Test
3. Alternator/Regulator Test

Charging System Light Test

Turn the ignition switch on (II).

Does the charging system light come on?
- NO → **(To page 23-101)**
- YES ↓

Start the engine.

Does the charging system light go off?
- YES → **Charging system light circuit is OK.**
- NO ↓

Turn the ignition switch off.

Disconnect the 4-P connector fromt the alternator.

Turn the ignition switch on (II).

Does the charging system light come on?
- YES → **Remove the 26-P connector from the ABS control unit and the integrated control unit from the rear of the under-dash fuse/relay box. If the charging system light stays on, repair the short to ground in the WHT/BLU wire.**
- NO ↓

No short or open in the WHT/BLU wire. Perform alternator/regulator test (see page 23-102).

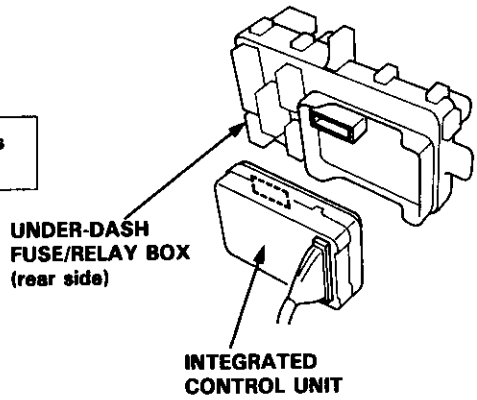

NOTE: After this test or related repairs, reconnect the control units, then reset the ECM to clear any codes.

Hatchback:

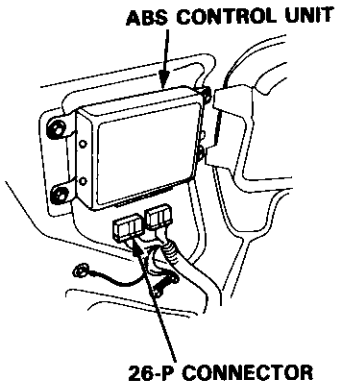

Sedan:

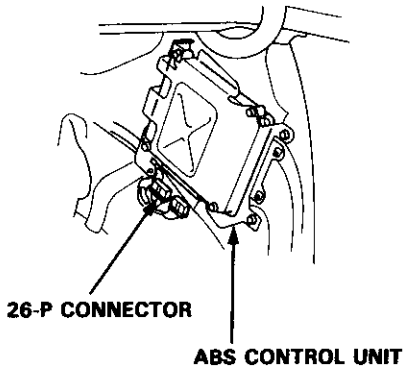

(From page 23-100)

*No. 24 (15 A): B18B1 engine
No. 24 (20 A): B18C1 engine

Turn the ignition switch off.

Check fuse *No. 24 in the under-dash fuse/relay box.

Is the fuse OK?

NO → **Replace the fuse.**

YES

Disconnect the 4-P connector from the alternator.

Turn the ignition switch on (II).

Check for voltage between the IG terminal (BLK/YEL wire) of the 4-P connector and body ground.

Is there battery voltage?

NO → **Repair open in the BLK/YEL wire.**

YES

Ground the WHT/BLU wire at the L terminal of the 4-P connector.

Does the charging system light come on?

NO → **Check for a blown charging system light bulb. If the bulb is OK, repair open in the WHT/BLU wire.**

YES

Replace the voltage regulator.

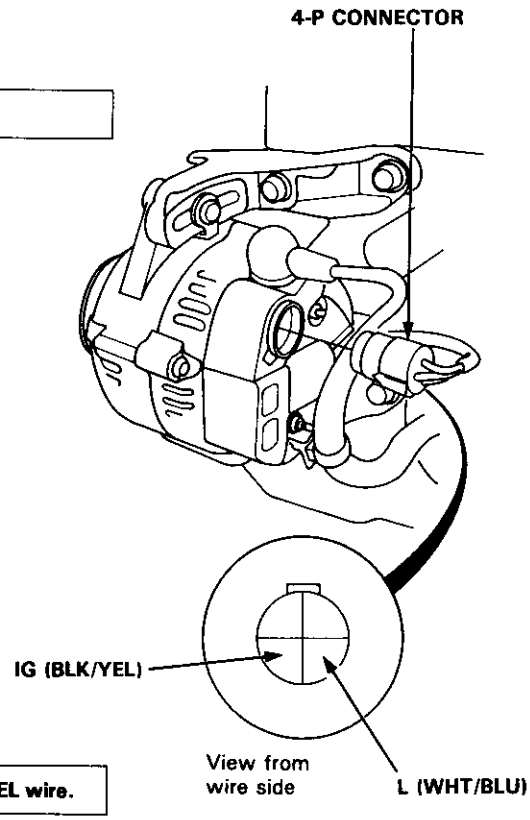

(cont'd)

Troubleshooting (cont'd)

Alternator/Regulator Test

NOTE: Make sure the battery is sufficiently charged (see page 23-66).

Connect the Sun VAT-40 (or equivalent test equipment) and turn the selector switch to position 1 (starting).

Shift to neutral or P and start the engine. Hold the engine at 3000 rpm with no load until the radiator fan comes on, then let it idle.

Raise the engine speed to 2000 rpm and hold it there.

Is the voltage over 15.1V?

YES → **Replace the voltage regulator.**

NO

Release the accelerator pedal and let the engine idle.

Make sure all electrical systems are turned off. Turn the selector switch to position 2 (charging).

Remove the inductive pick-up and zero the ammeter.

Place the inductive pick-up over the B terminal wire of the alternator so that the arrow points away from the alternator.

Raise the engine speed to 2000 rpm and hold it there.

Is the voltage less than 13.9V?

YES → **Test the battery (see page 23-66).**

NO

(To page 23-103)

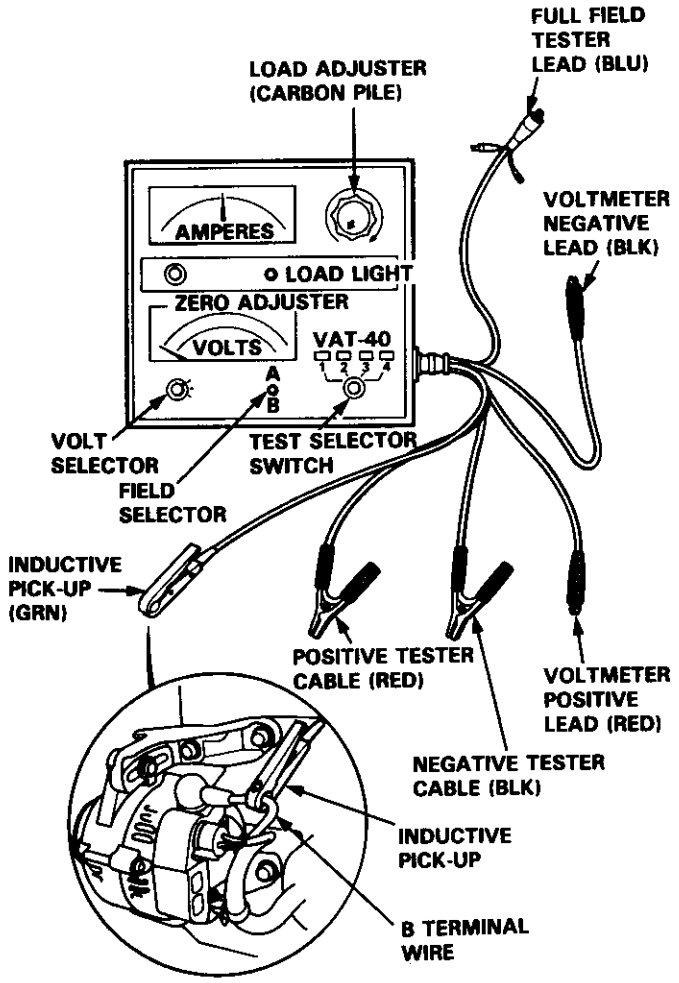

(From page 23-102)

Apply a load with the VAT-40 until the battery voltage drops to between 12–13.5 V.

Is the amperage 60 A or more?

YES → **Charging system is OK.**

NO

With the engine speed still at 2000 rpm, full-field the alternator.

NOTE: Attach a probe to the VAT-40 full field test lead and insert the probe into the full field access hole at the back of the alternator. Switch the field selector to the "A (Ground)" position momentarily and check amperage reading.

CAUTION: The voltage will rise quickly when the alternator is full-fielded. Do not allow the voltage to exceed 18 V or it may damage the electrical system

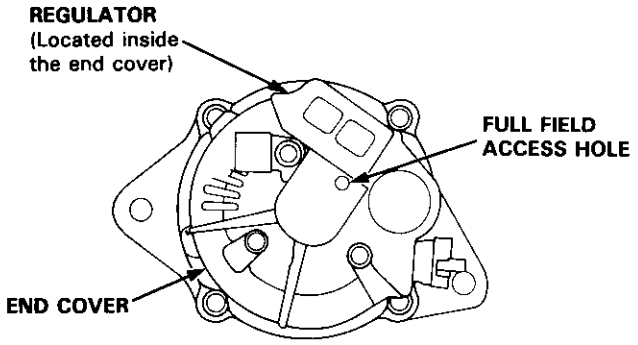

Is the alternator output 60 A or more?

NO → **Test and repair the alternator (see pages 23-104 to 23-107).**

YES

Turn the ignition switch off; then turn it on again.

Disconnect the 4-P connector from the alternator.

Check for voltage between the IG terminal (BLK/YEL) and body ground.

Is there battery voltage?

NO → **Repair open in the BLK/YEL wire.**

YES

Replace the voltage regulator.

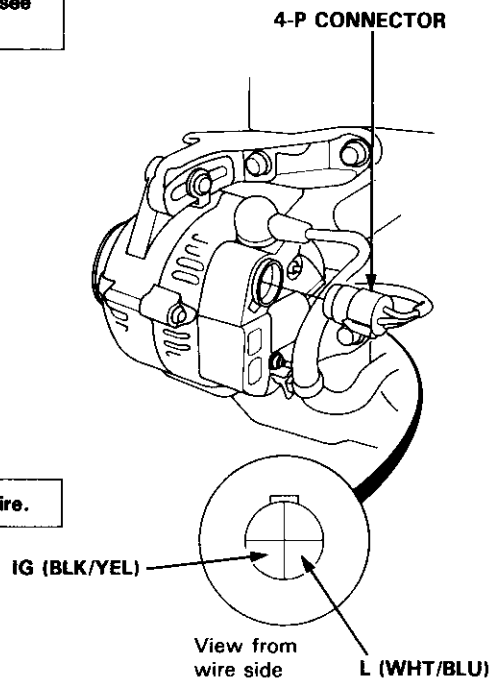

Alternator Replacement

NOTE: The original radio has a coded theft protection circuit. Be sure to get the customer's code number before
- disconnecting the battery.
- removing the No. 32 (7.5 A) fuse from the under-hood fuse/relay box.
- removing the radio.

After service, reconnect power to the radio and turn it on. When the word "CODE" is displayed, enter the customer's 5-digit code to restore radio operation.

1. Disconnect the ground cable from the battery negative (−) terminal.

2. Disconnect the alternator connector from the alternator.

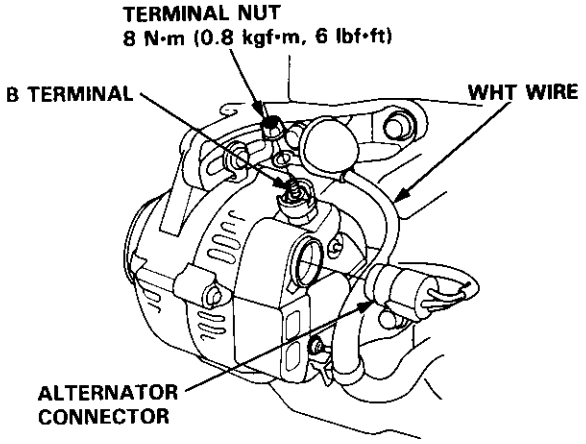

3. Remove the terminal nut and the WHT wire from the B terminal.

4. Loosen the adjusting nut, then remove the mounting nut.

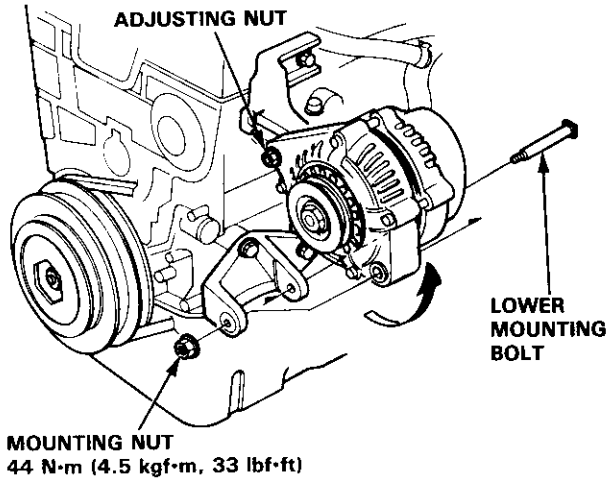

5. Remove the alternator belt from the alternator pulley.

6. Remove the lower mounting bolt, then lift the alternator upward.

7. Remove the lower and upper mounting bracket bolts and the mounting brackets.

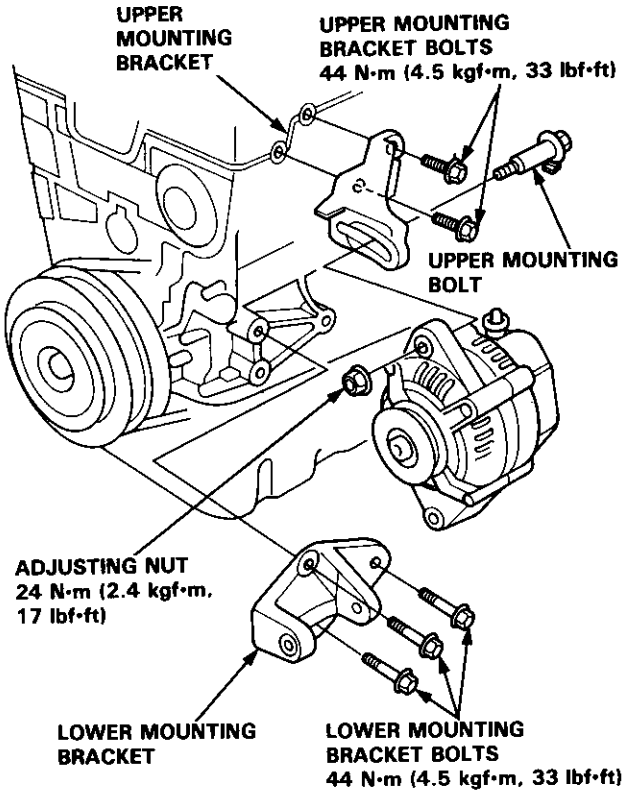

8. Remove the adjusting nut and upper mounting bolt, then lift out the alternator.

9. Install the alternator in the reverse order of removal.

CAUTION: Adjust the alternator belt tension after installation (see page 23-108).

NOTE: Reconnect the battery ground cable and turn the radio on. When the word "CODE" is displayed, enter the customer's 5-digit code.

Alternator Overhaul

CAUTION: Do not remove the pulley unless the front bearing needs replacement.

To loosen the pulley locknut, use 10 mm and 22 mm wrenches. If necessary, use an impact wrench.

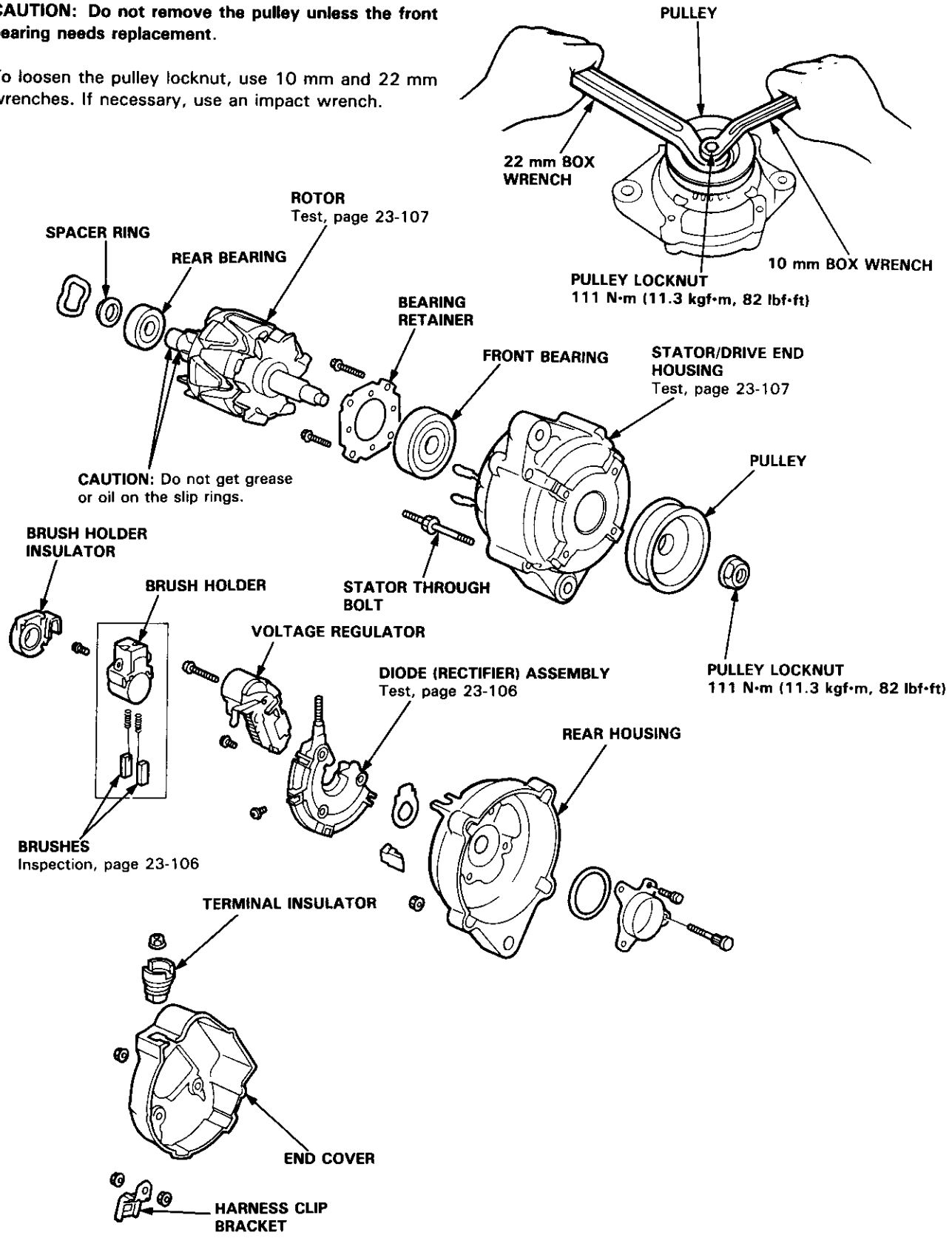

Rectifier Test

NOTE: The diodes are designed to allow current to pass in one direction while blocking it in the opposite direction. Each diode must be tested for continuity in both directions with an ohmmeter that has diode checking capability. Since the alternator rectifier is made up of eight diodes (four pairs), there are a total of 16 checks.

1. Check for continuity in each direction between the B and P terminals, and between the E (ground) and P terminals of each diode pair. All diodes should have continuity in only one direction.

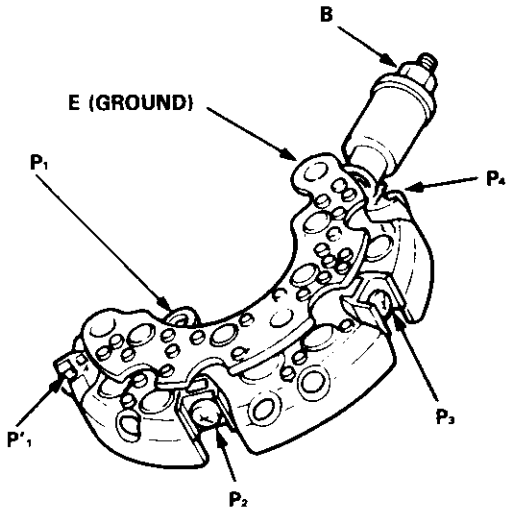

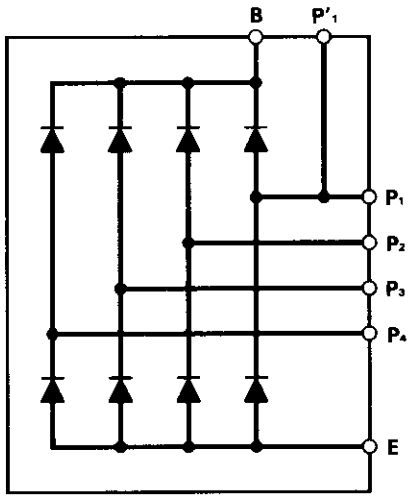

2. If any of the eight diodes fails, replace the rectifier assembly. (Diodes are not available separately.)

Alternator Brush Inspection

1. Remove the end cover, then take out the brush holder by removing its two screws.

2. Measure the length of the brushes with a vernier caliper.

   Alternator Brush Length:
   Standard: 10.5 mm (0.41 in)
   Service Limit: 1.5 mm (0.06 in)

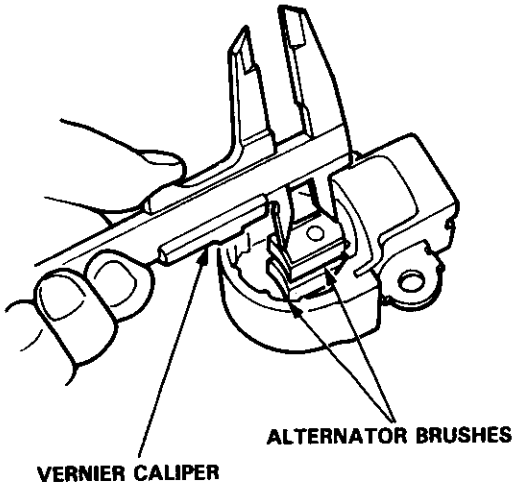

If the brushes are less than the service limit, replace the brush holder assembly.

Rotor Slip Ring Test

1. Check that there is continuity between the slip rings.

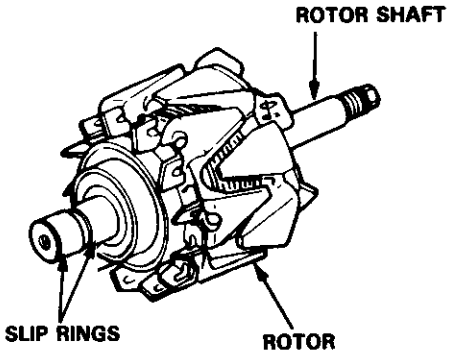

2. Check that there is no continuity between the slip rings and the rotor or rotor shaft.

3. If the rotor fails either continuity check, replace the alternator.

Stator Test

1. Check that there is continuity between each pair of leads.

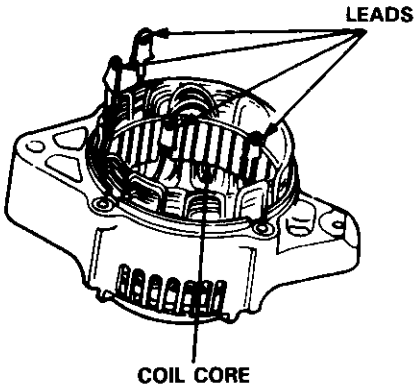

2. Check that there is no continuity between each lead and the coil core.

3. If the coil fails either continuity check, replace the alternator.

Alternator Belt Inspection and Adjustment

Deflection Method:
Apply a force of 100 N (10 kgf, 22 lbf) and measure the deflection between the alternator and the crankshaft pulley.

Deflection: 9–11 mm (0.35–0.43 in)

NOTE: On a brand-new belt (one that has been run for less than five minutes), the deflection should be 6–8 mm (0.23–0.32 in) when first measured. If the belt is worn or damaged, replace it.

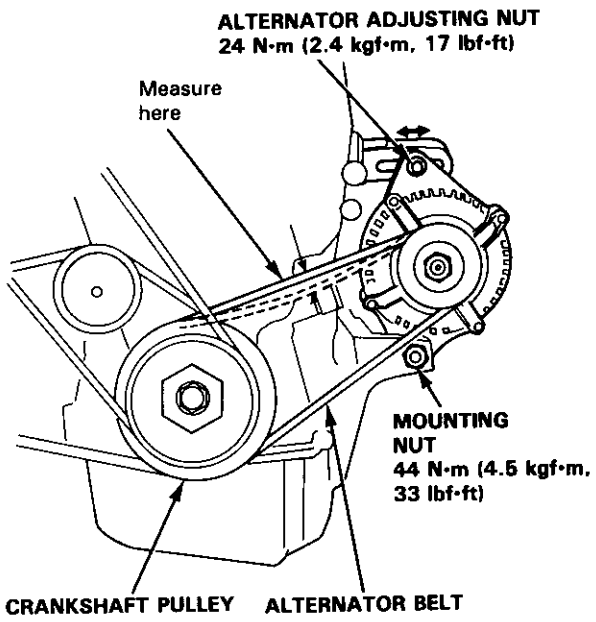

If adjustment is necessary:

1. Loosen the alternator adjusting nut and mounting nut.
2. Move the alternator to obtain the proper belt tension, then retighten the adjusting nut and mounting nut to the specified torques.
3. Recheck the deflection of the belt.

   NOTE: If necessary, adjust the P/S pump belt (see section 17) and A/C compressor belt (see section 22).

Belt Tension Gauge Method:
Following the gauge manufacturer's instructions, attach the belt tension gauge to the belt and measure the tension.

Tension: 340–490 N (35–50 kgf, 77–110 lbf)

NOTE: On a brand-new belt (one that has been run for less than five minutes), tension should be 690–880 N (70–90 kgf, 154–198 lbf) when first measured. If the belt is worn or damaged, replace it.

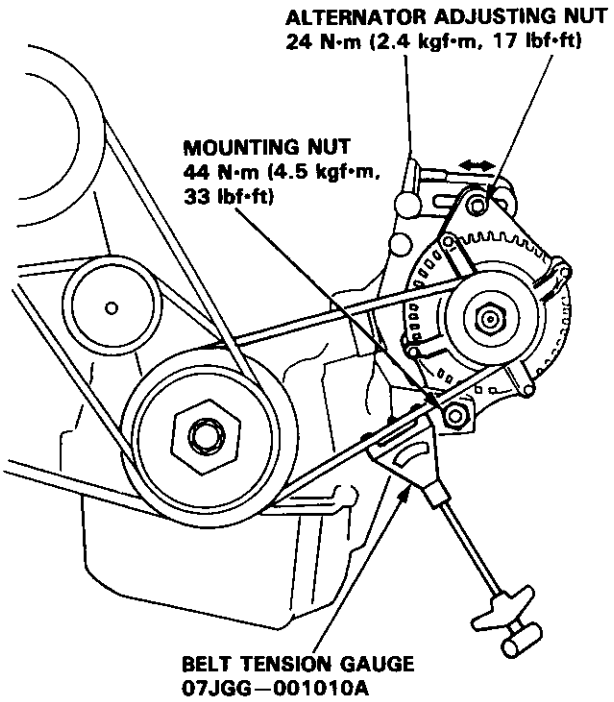

If adjustment is necessary:

1. Loosen the alternator adjusting nut and mounting nut.
2. Move the alternator to obtain the proper belt tension, then retighten the adjusting nut and mounting nut to the specified torques.
3. Recheck the tension of the belt.

   NOTE: If necessary, adjust the P/S pump belt (see section 17) and A/C compressor belt (see section 22).

Component Location Index

For the A/C system, see section 22.

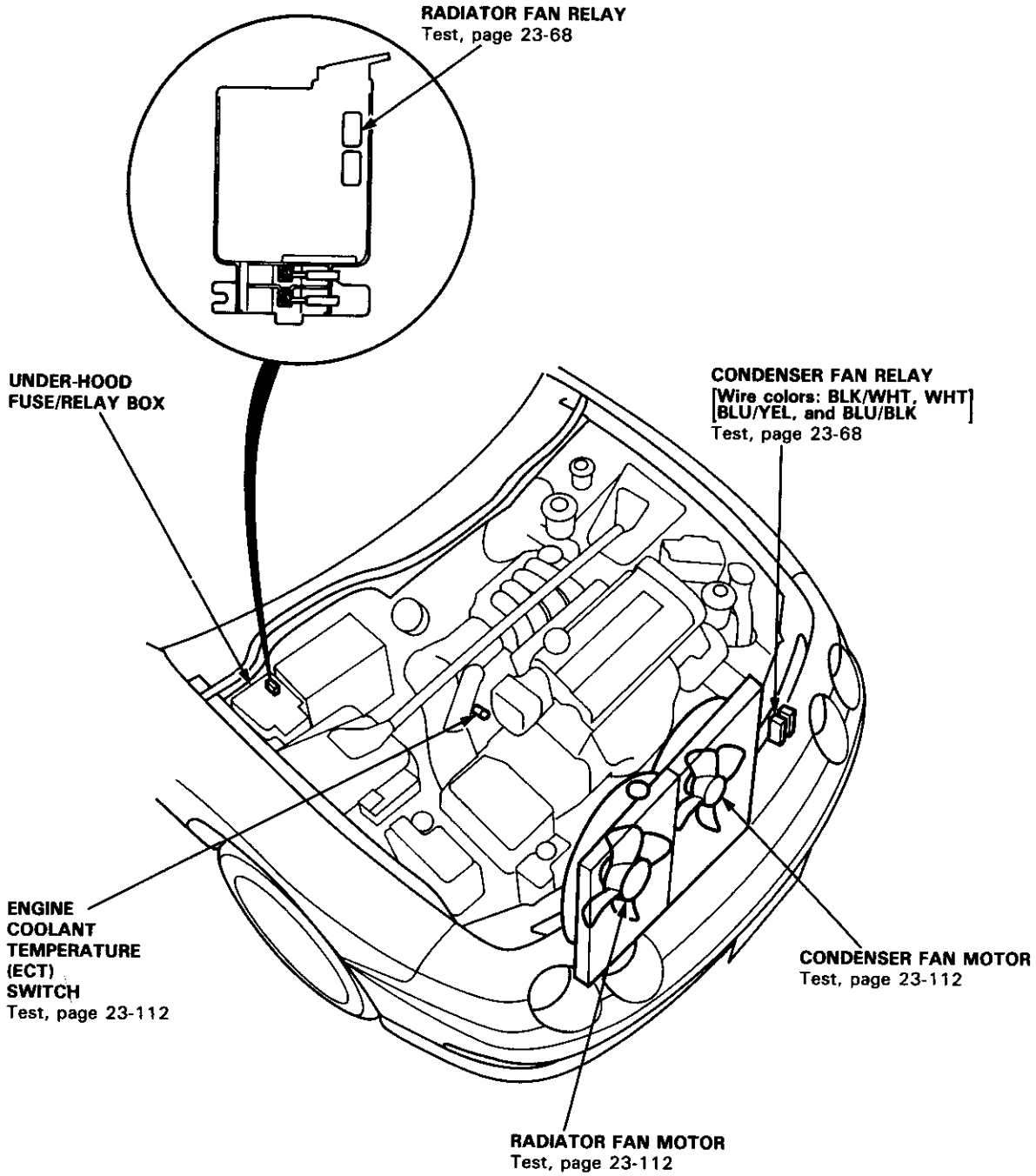

Fan Controls

Circuit Diagram (Without A/C)

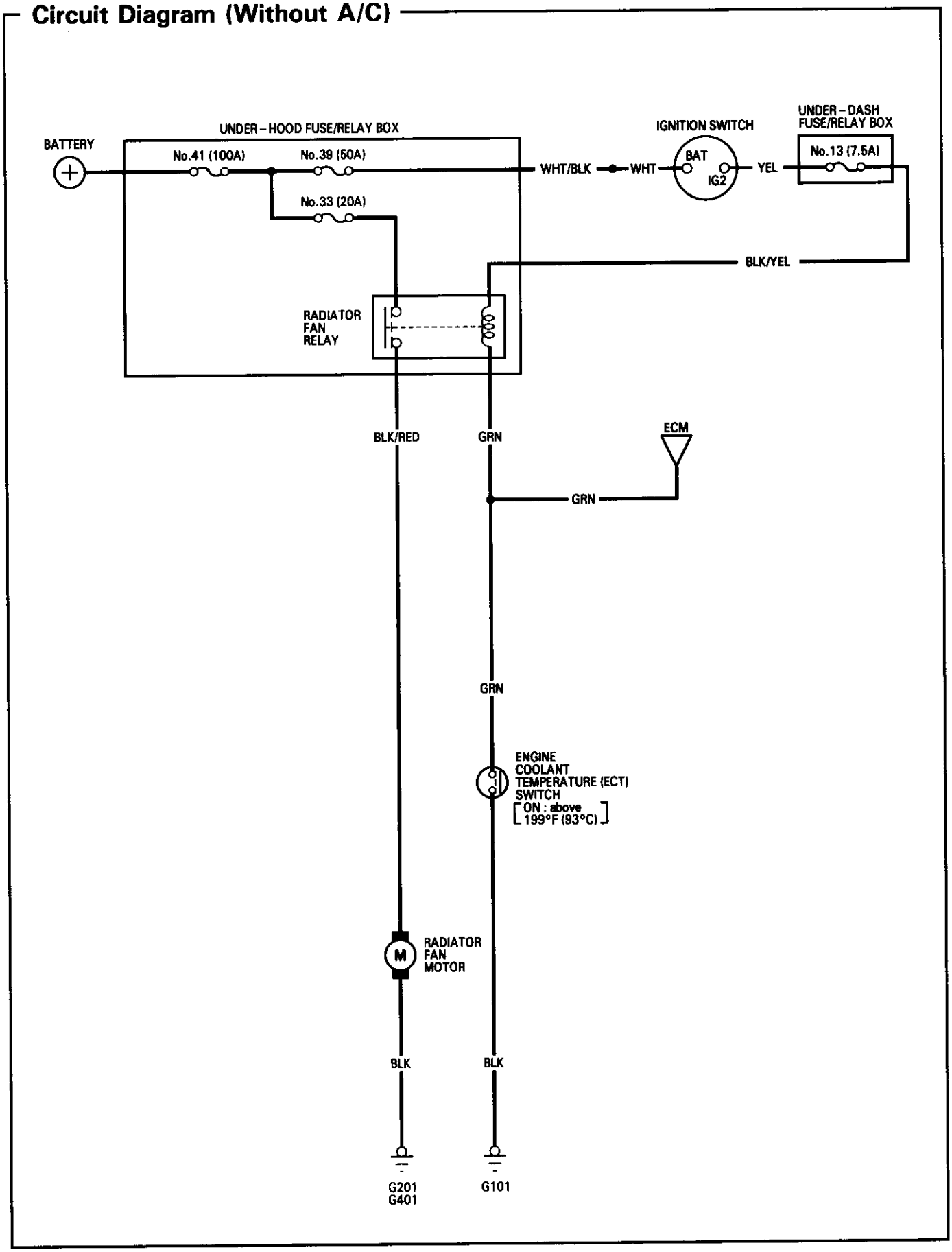

Circuit Diagram (With A/C)

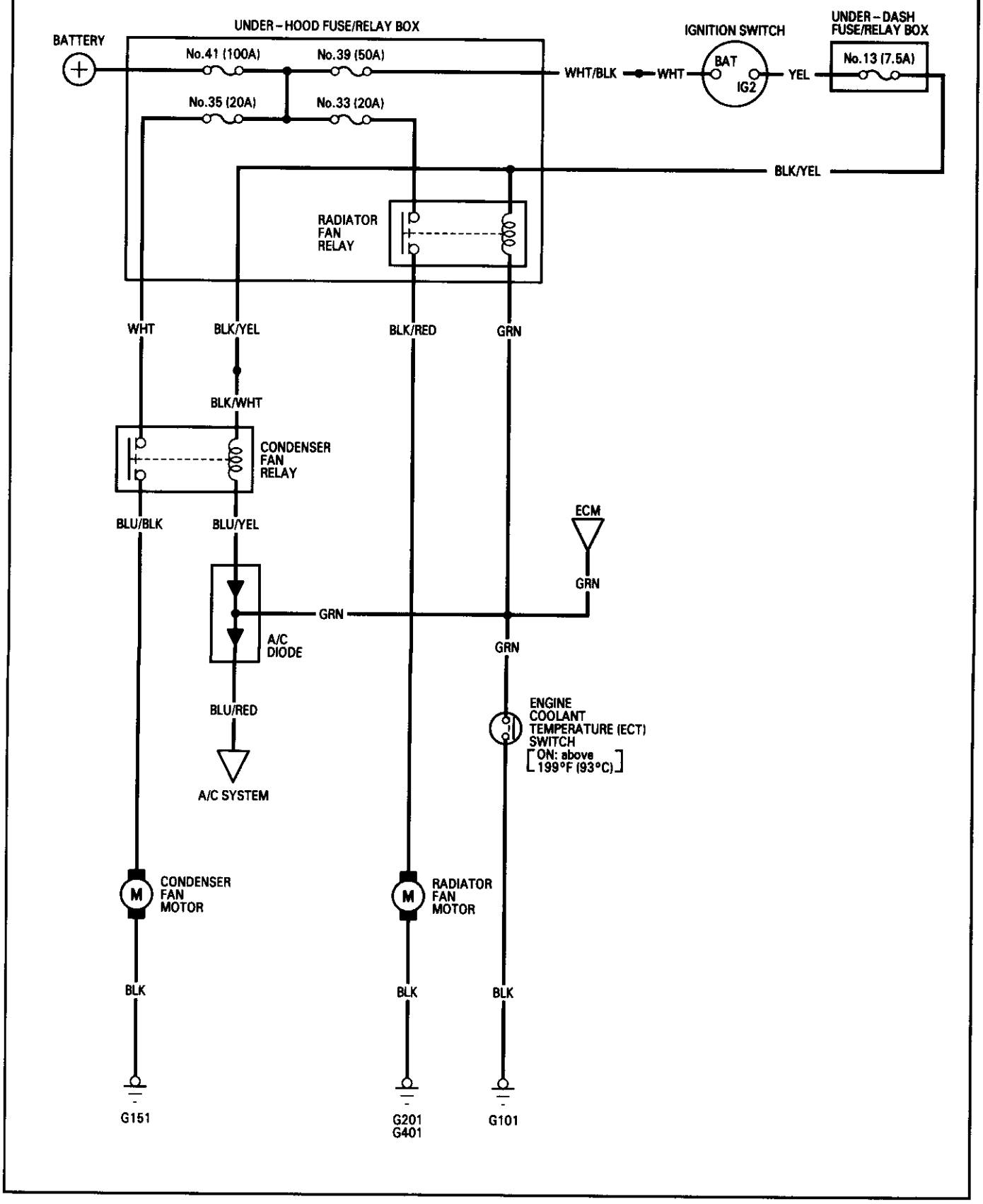

Fan Controls

Fan Motor Test

1. Disconnect the 2-P connector from the fan motor.
2. Test the motor by connecting battery power to the B terminal, and ground to the A terminal.
3. If the fan motor fails to run smoothly, replace it.

   NOTE: The illustration shows the radiator fan.

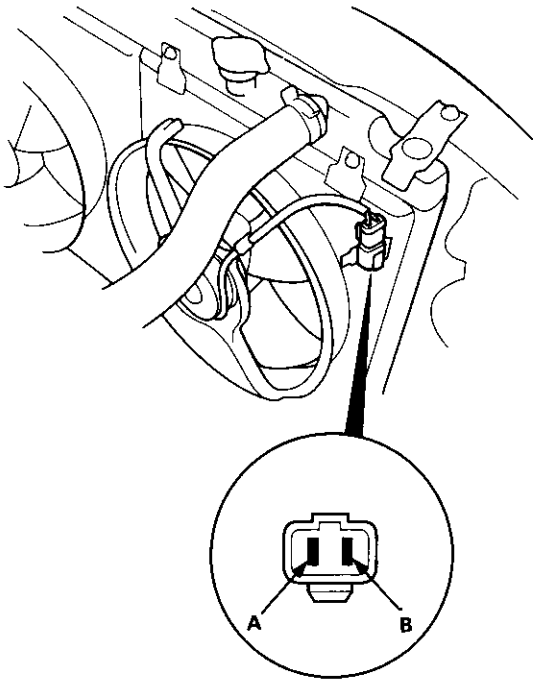

Engine Coolant Temperature (ECT) Switch Test

NOTE: Bleed air from the cooling system after installing the engine coolant temperature (ECT) switch (see section 10).

1. Remove the ECT switch from the thermostat housing.
2. Suspend the ECT switch in a container of coolant as shown.

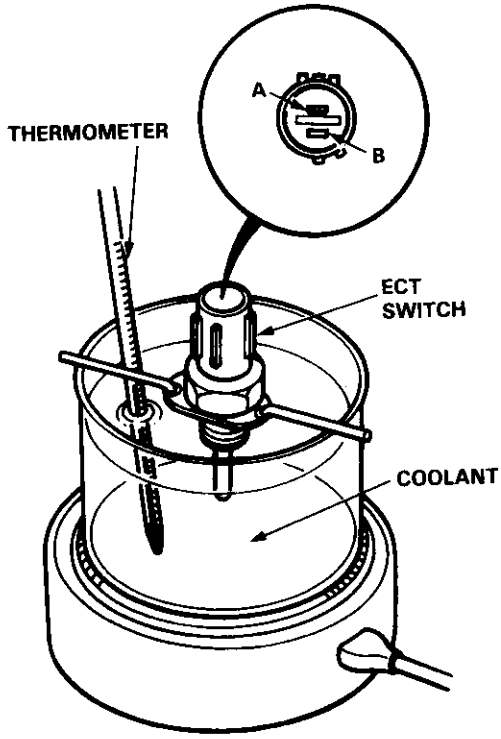

3. Heat the coolant and check engine coolant temperature with a thermometer.
4. Check the continuity between the A and B terminals according to the table:

Temperature \ Terminal		A	B
Switch	Above 196–203°F (91–95°C)	○	○
	Below 181–189°F (83–87°C)		

Gauge Assembly

Component Location Index

CAUTION:

- **All SRS electrical wiring harnesses are covered with yellow insulation.**
- **Before disconnecting any part of the SRS wire harness, connect the short connector(s).**
- **Replace the entire affected SRS harness assembly if it has an open circuit or damaged wiring.**

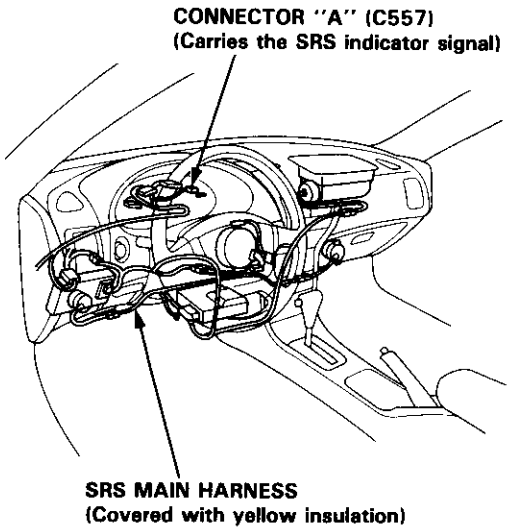

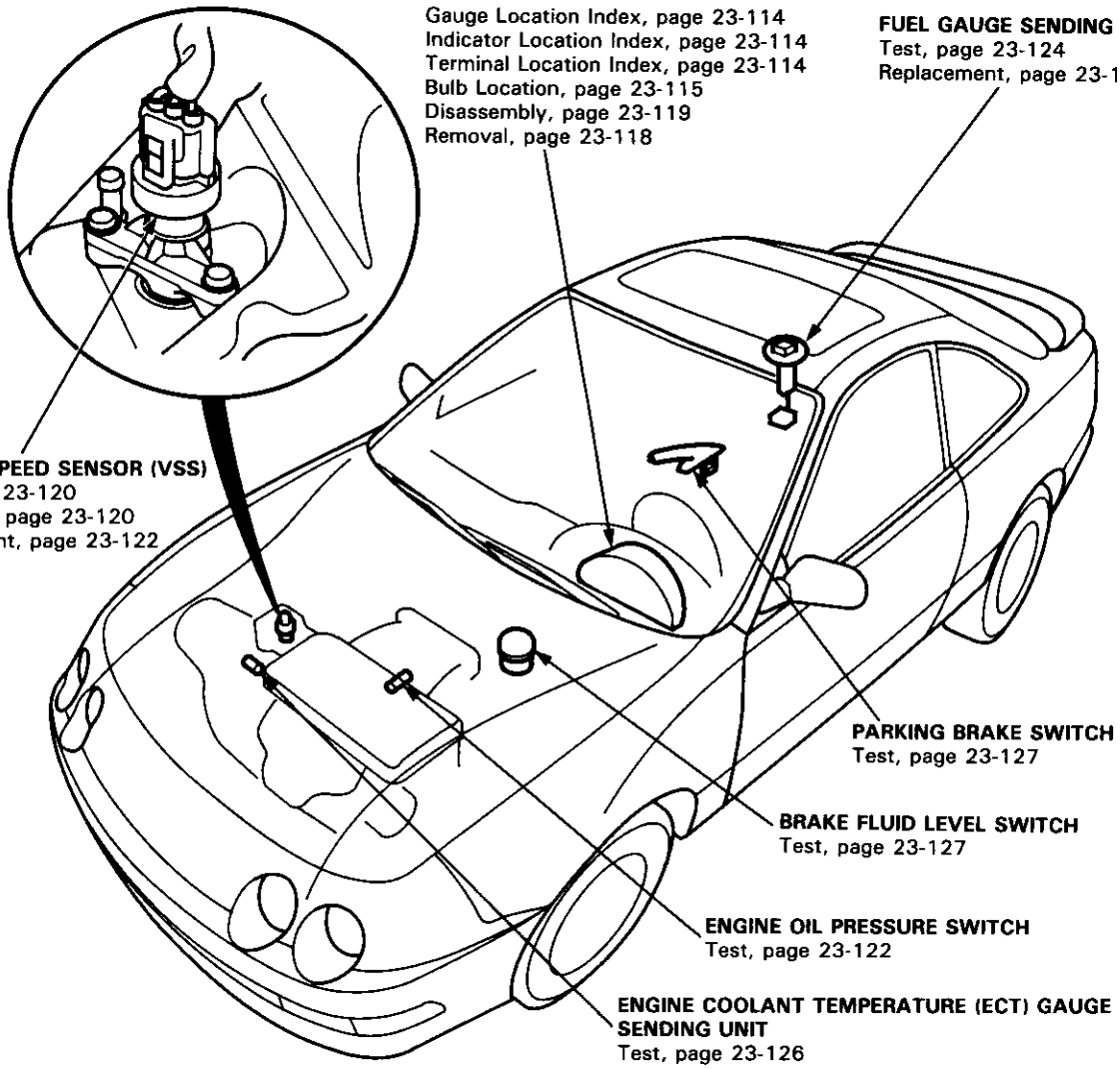

Gauge Assembly

Gauge/Indicator/Terminal Location Index

CAUTION:

- **All SRS electrical wiring harnesses are covered with yellow insulation.**
- **Before disconnecting any part of the SRS wire harness, connect the short connector(s).**
- **Replace the entire affected SRS harness assembly if it has an open circuit or damaged wiring.**

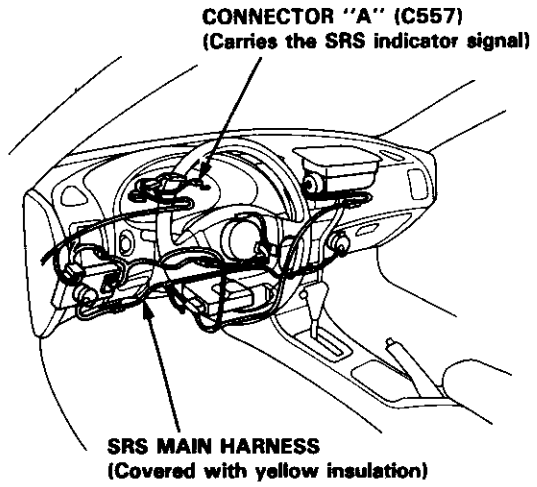

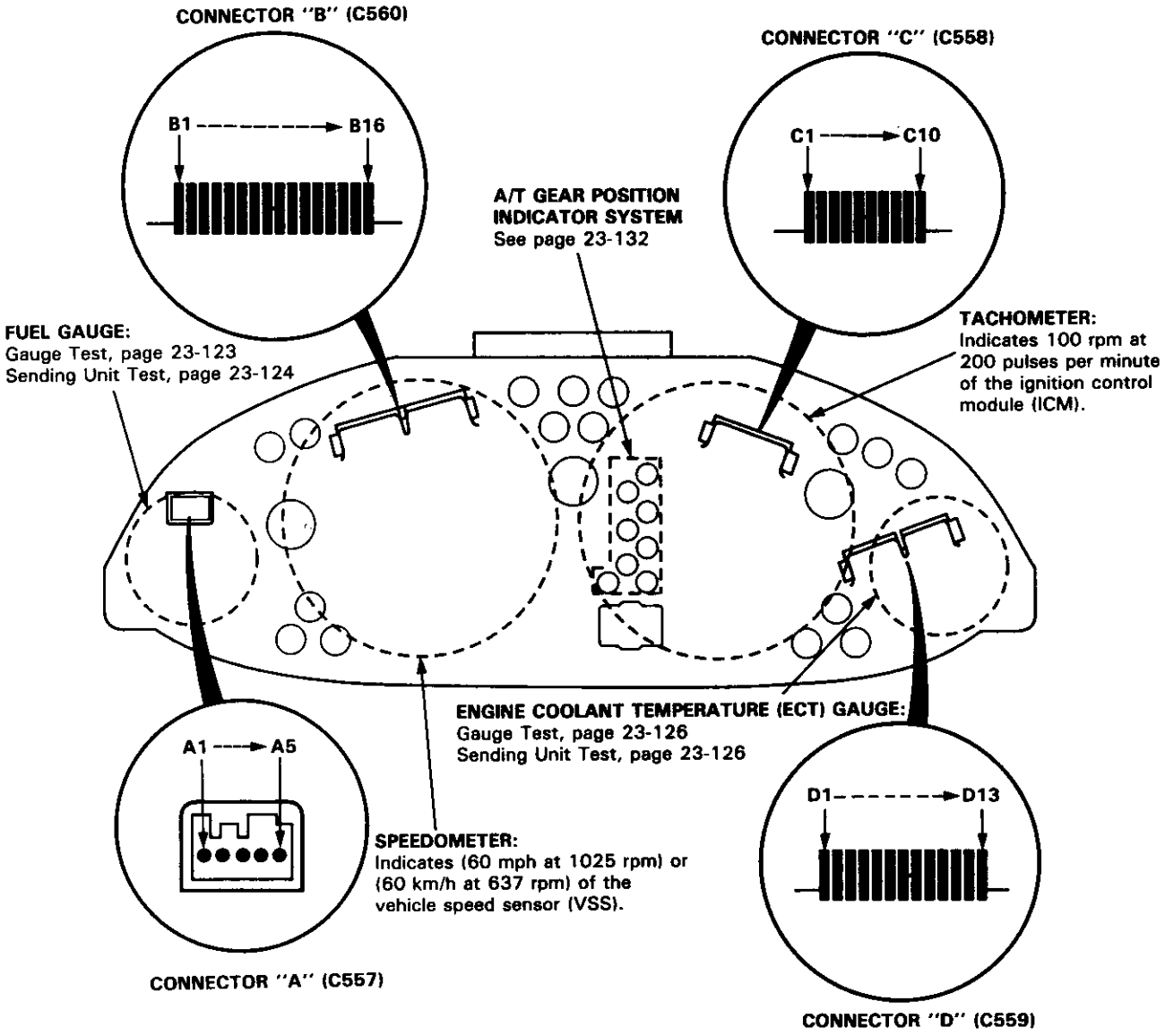

Bulb Locations

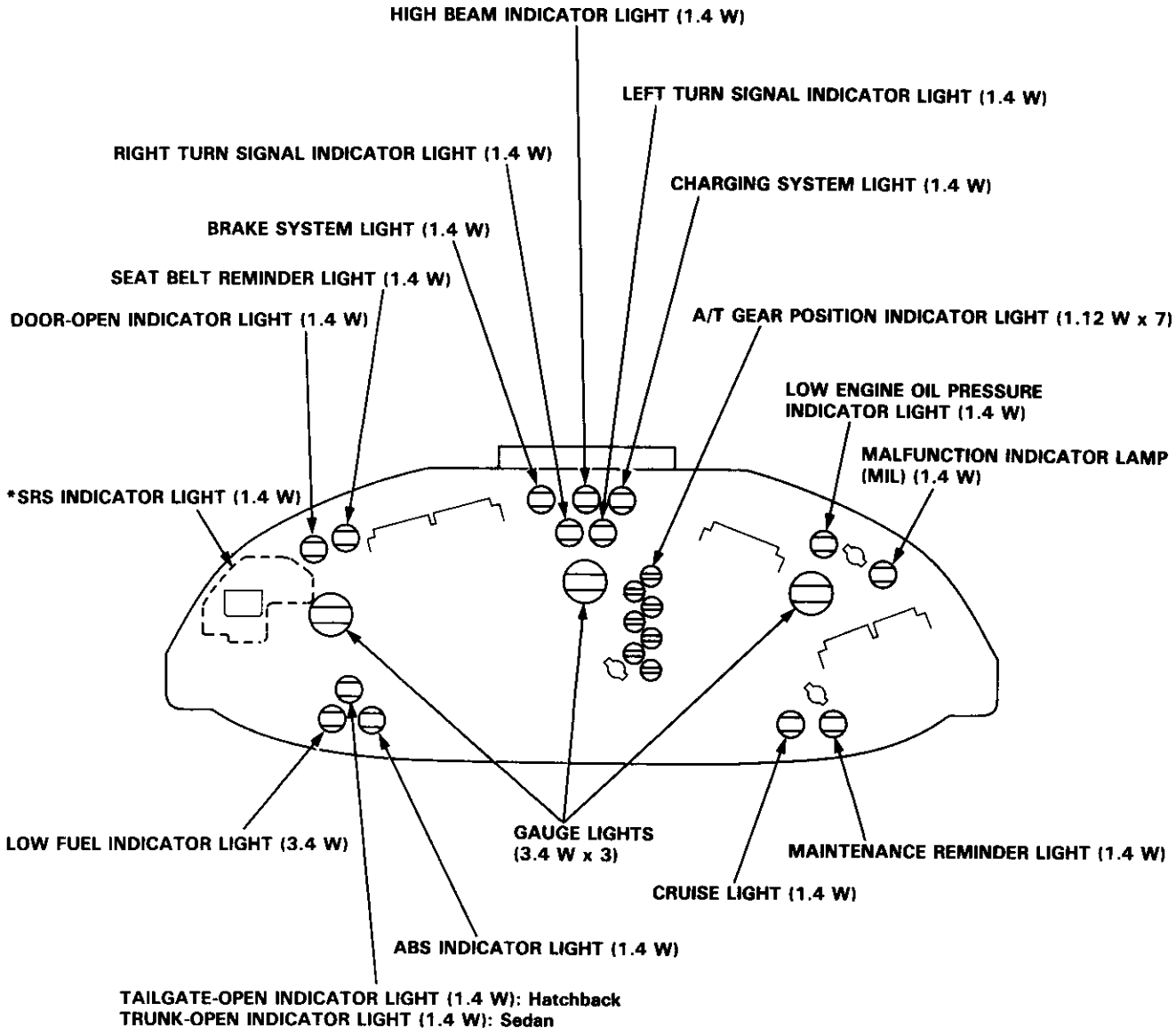

*: On the SRS printed circuit board

Gauge Assembly

Circuit Diagram

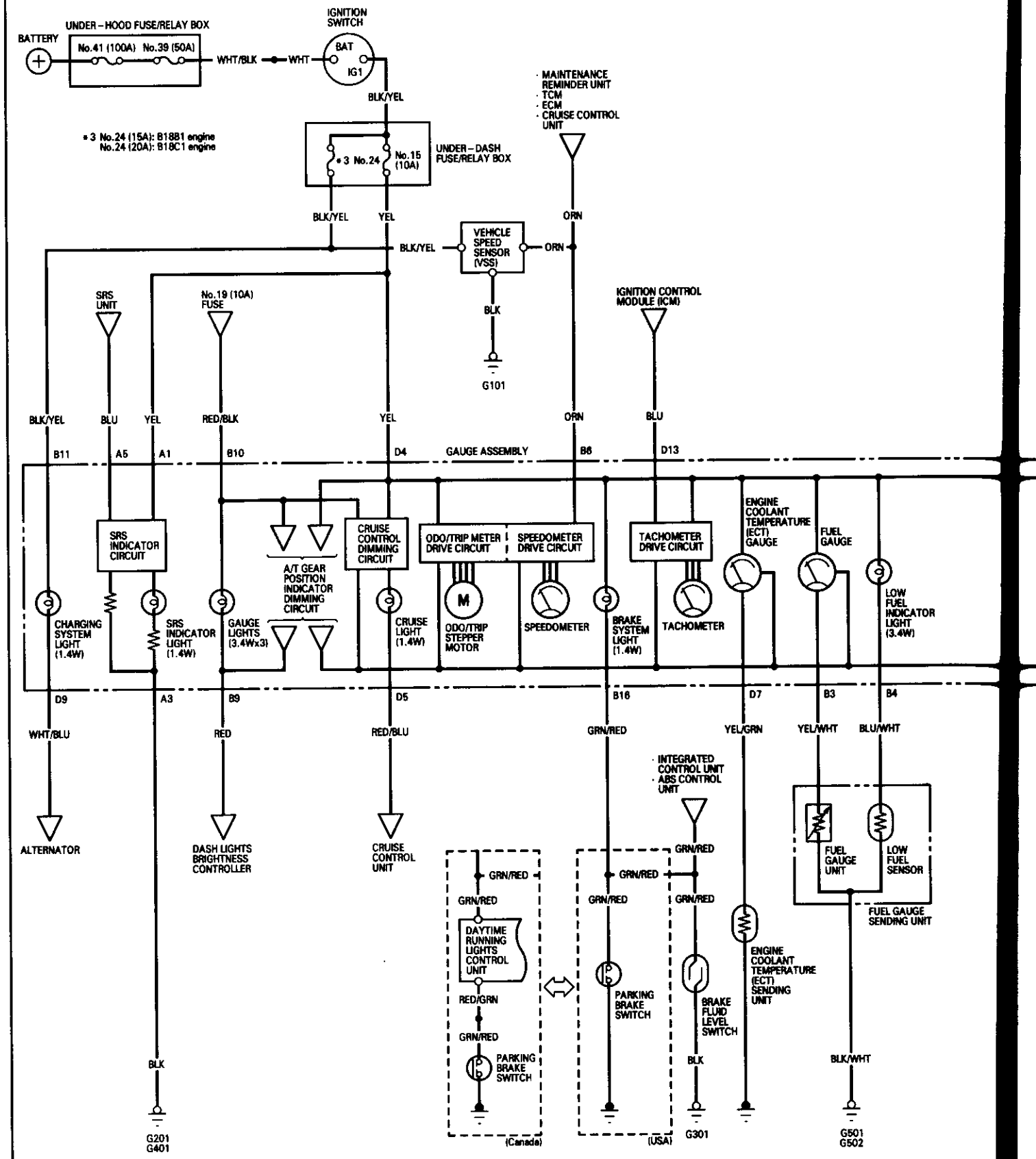

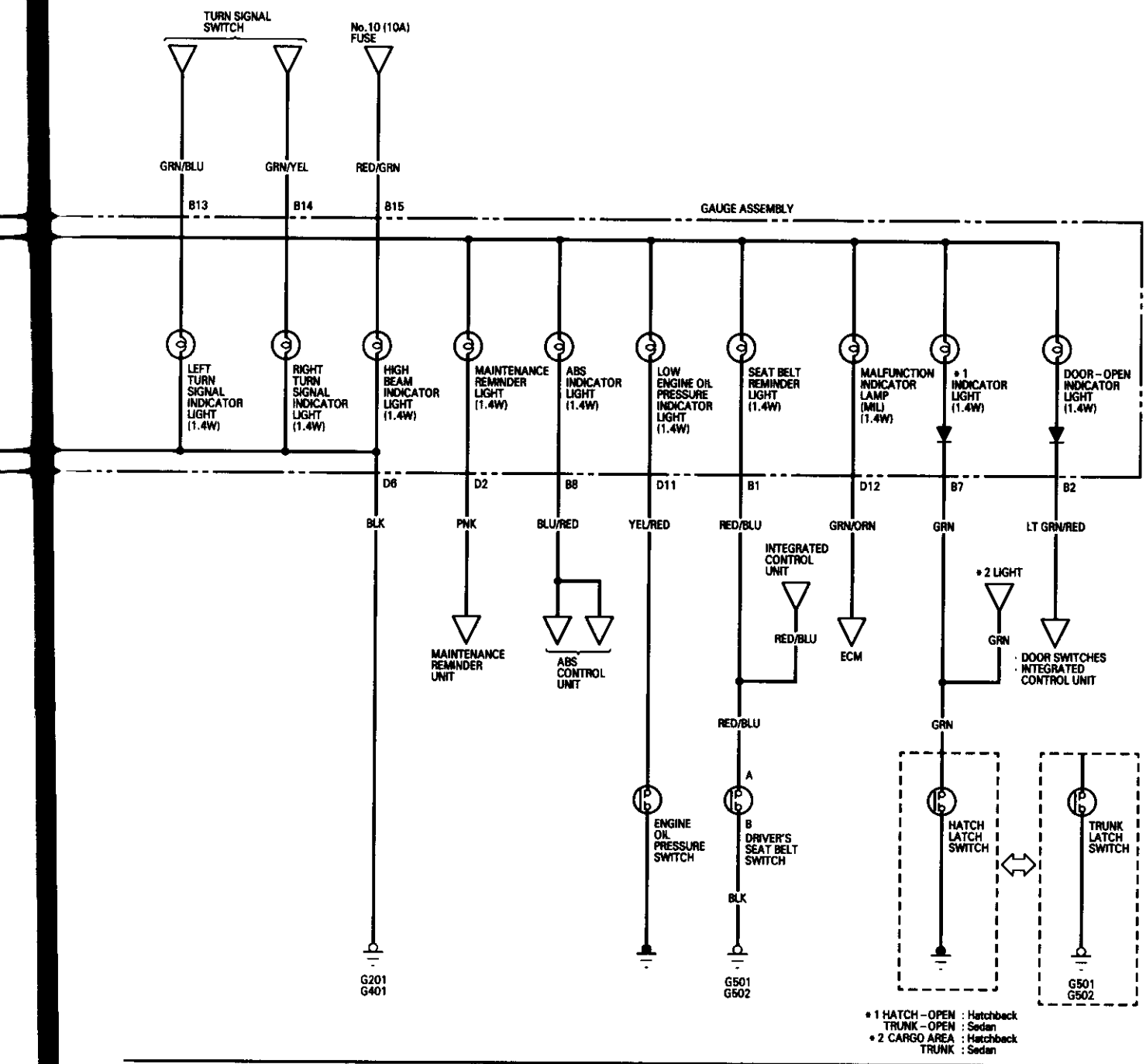
TURN SIGNAL SWITCH
No.10 (10A) FUSE
GRN/BLU
GRN/YEL
RED/GRN
B13
B14
B15
GAUGE ASSEMBLY
LEFT TURN SIGNAL INDICATOR LIGHT (1.4W)
RIGHT TURN SIGNAL INDICATOR LIGHT (1.4W)
HIGH BEAM INDICATOR LIGHT (1.4W)
MAINTENANCE REMINDER LIGHT (1.4W)
ABS INDICATOR LIGHT (1.4W)
LOW ENGINE OIL PRESSURE INDICATOR LIGHT (1.4W)
SEAT BELT REMINDER LIGHT (1.4W)
MALFUNCTION INDICATOR LAMP (MIL) (1.4W)
*1 INDICATOR LIGHT (1.4W)
DOOR-OPEN INDICATOR LIGHT (1.4W)
D6
D2
B8
D11
B1
D12
B7
B2
BLK
PNK
BLU/RED
YEL/RED
RED/BLU
GRN/ORN
GRN
LT GRN/RED
INTEGRATED CONTROL UNIT
*2 LIGHT
RED/BLU
GRN
MAINTENANCE REMINDER UNIT
ABS CONTROL UNIT
ECM
DOOR SWITCHES
INTEGRATED CONTROL UNIT
RED/BLU
GRN
A
B
ENGINE OIL PRESSURE SWITCH
DRIVER'S SEAT BELT SWITCH
HATCH LATCH SWITCH
TRUNK LATCH SWITCH
BLK
G201
G401
G501
G502
G501
G502
*1 HATCH-OPEN : Hatchback
TRUNK-OPEN : Sedan
*2 CARGO AREA : Hatchback
TRUNK : Sedan

Gauge Assembly

Removal

CAUTION:
- **All SRS electrical wiring harnesses are covered with yellow insulation.**
- **Before disconnecting any part of the SRS wire harness, connect the short connector(s).**
- **Replace the entire affected SRS harness assembly if it has an open circuit or damaged wiring.**

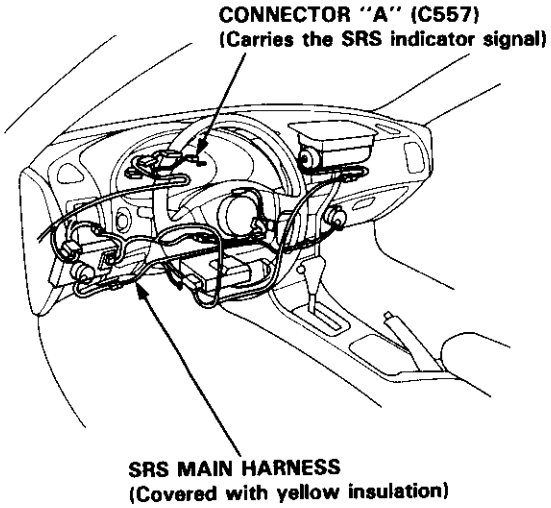

1. Remove the two screws from the instrument panel.
2. Remove the instrument panel.

   NOTE: Remove the instrument panel carefully without damaging the clips.

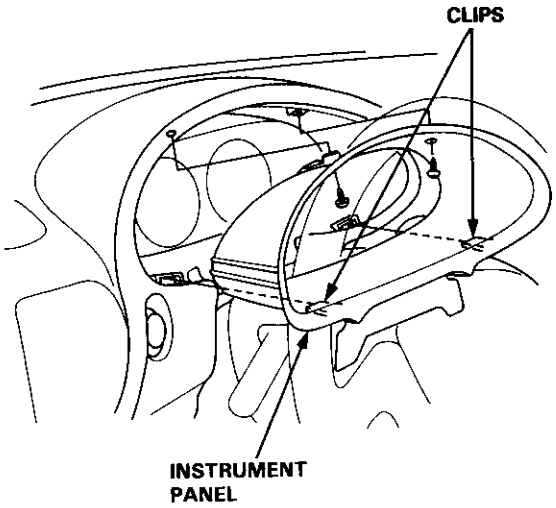

3. Tilt the steering wheel down with the tilt adjustment lever.
4. Remove the three mounting screws, and spread a protective cloth on the steering column.

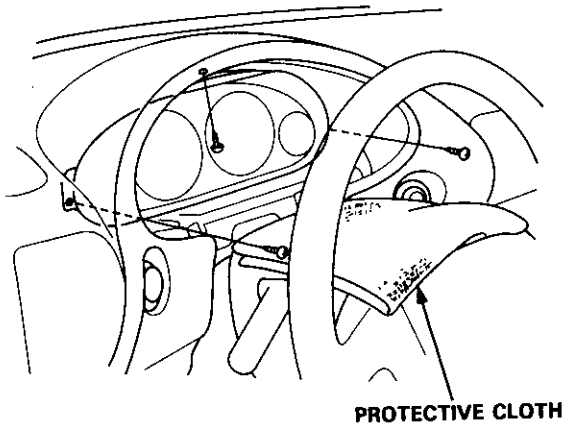

5. Pry the gauge assembly out, and disconnect all connectors from it.

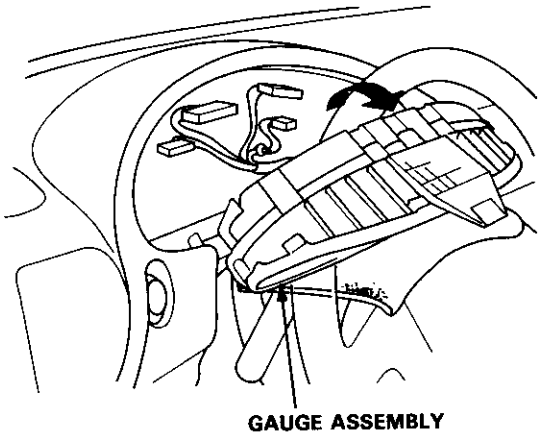

6. Take out the gauge assembly as shown.

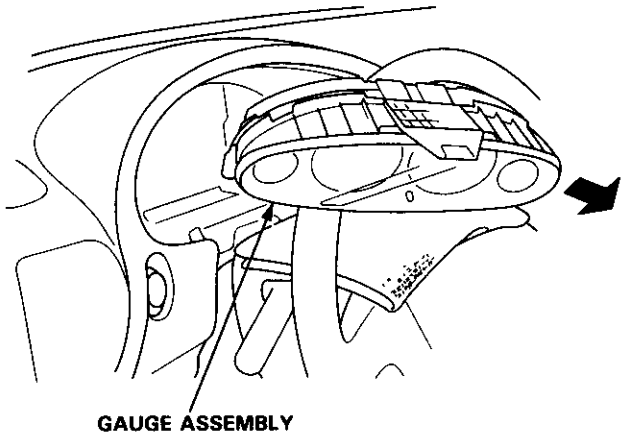

Disassembly

NOTE: Handle the terminals and printed circuit boards carefully to avoid damaging them.

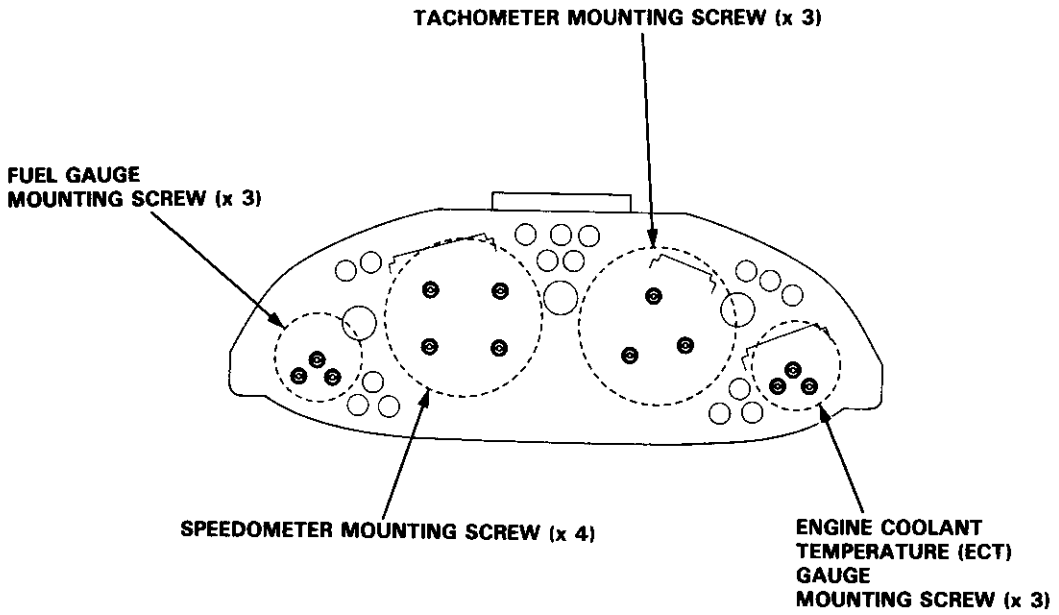

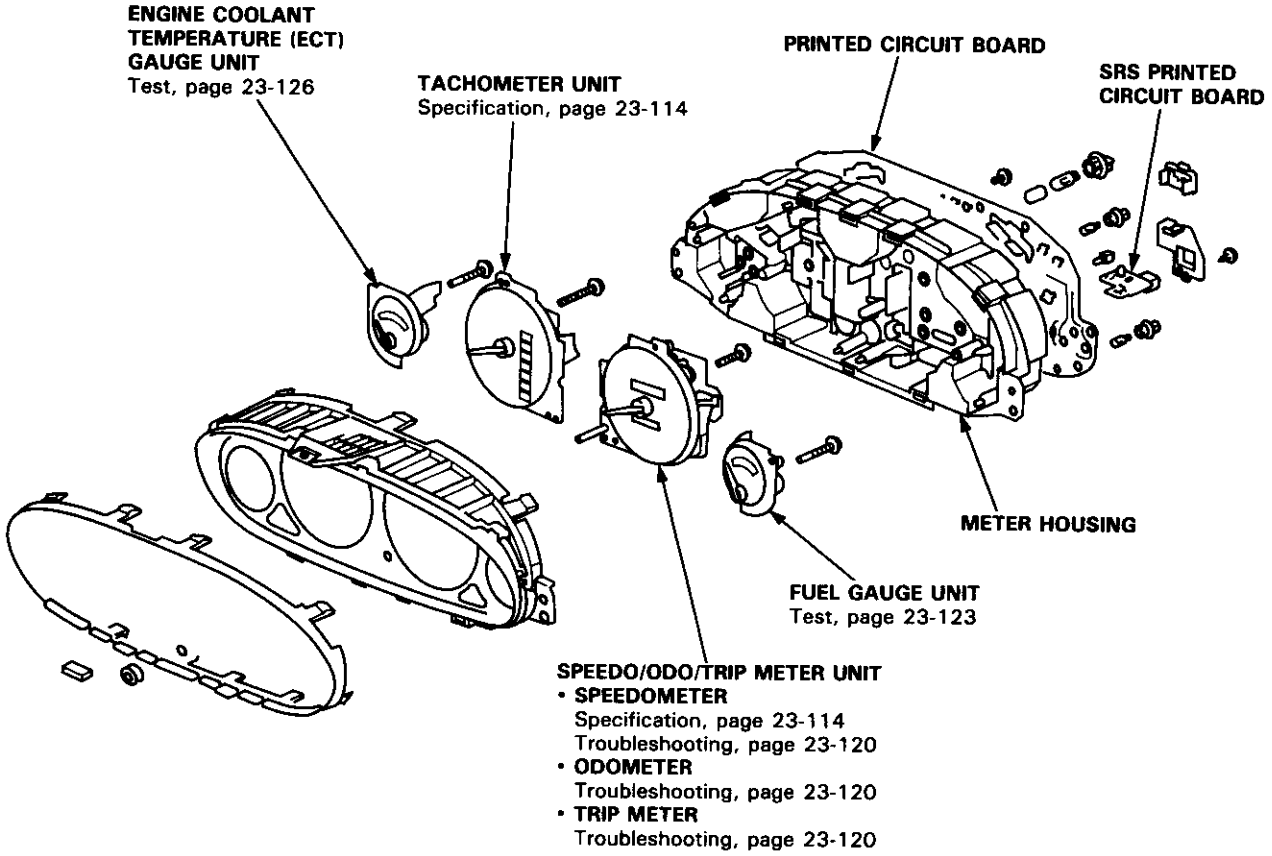

Troubleshooting

NOTE: The numbers in the table show the troubleshooting sequence.

Symptom \ Item to be inspected	Blown *No. 24 fuse (In the under-dash fuse/relay box)	Speedometer	Odo/Trip meter	Printed circuit board	Vehicle speed sensor (VSS) input test	Odometer connector at printed circuit board	VSS test flowchart
Odometer and trip meter work, but speedometer does not.		1		2			
Speedometer works, but odometer and trip meter do not.			1	2		3	
Speedometer, odometer, and trip meter do not work.	1				2		3

VSS Input Test (At harness side of 3-P connector)

No.	Wire	Test condition	Test: Desired result	Possible cause if result is not obtained
1	BLK	Under all conditions	Check for continuity to ground: There should be continuity.	• An open in the wire • Poor ground (G101)
2	BLK/YEL	Ignition switch ON (II)	Check for voltage to ground: There should be battery voltage.	• Blown *No. 24 fuse in the under-dash fuse/relay box • Short to ground • An open in the wire
3	ORN	Ignition switch ON (II)	Check for voltage to ground: There should be about 5 V.	• Short to ground • An open in the wire

NOTE: A short to ground in the ORN wire can be caused by a short in any component connected to it.

VSS Test

Speedometer does not work.

Inspect *No. 24 fuse in the under-dash fuse/relay box before testing.

Disconnect the 3-P connector at the VSS.

Turn the ignition switch ON (II).

Measure voltage between the BLK/YEL wire terminal and the BLK wire terminal in the harness side of the 3-P connector.

(To next page)

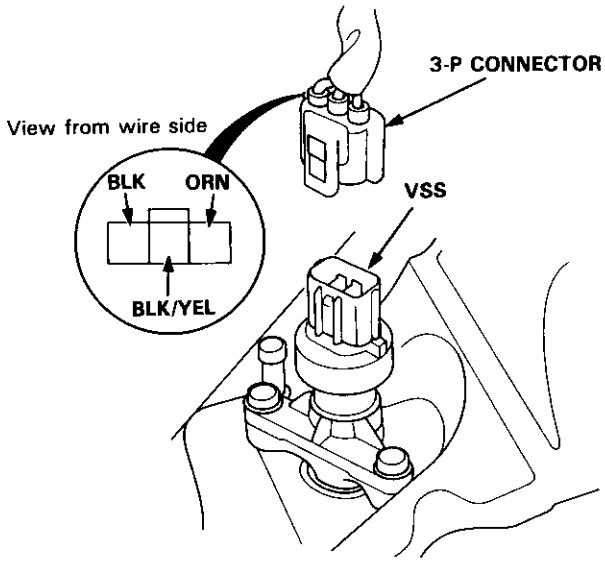

*No. 24 (15 A): B18B1 engine No. 24 (20 A): B18C1 engine

(From previous page)

Is there battery voltage?

NO → Check for continuity between the BLK terminal and body ground.

Is there continuity?

NO → **Repair open between VSS and ground G101.**

YES → **Repair open in the BLK/YEL wire between VSS and under-dash fuse/relay box.**

YES → Measure voltage between the ORN and the BLK wire terminals.

Is there about 5 V?

NO → **Repair open in the ORN wire or short to body ground.**

YES → Reconnect the 3-P connector at the VSS.

Raise the front of the car and support it with safety stands.

Touch a probe to the ORN wire and connect it to body ground through a voltmeter.

Put the car in neutral with key ON.

Slowly rotate one wheel with the other wheel blocked.

Does voltage pulse from 0 to about 10 V?

NO → **Replace the VSS (see page 23-122).**

YES → Disconnect the 16-P connector at the speedometer.

Touch a probe to the ORN wire and connect it to body ground through a voltmeter.

Slowly rotate one wheel with the other wheel blocked.

Does the meter indicate pulsing voltage?

NO → **Repair open in the ORN wire between the VSS and the speedometer.**

YES → **Replace the speedometer.**

Vehicle Speed Sensor (VSS)

Replacement

1. Disconnect the 3-P connector from the vehicle speed sensor (VSS).

2. Remove the two mounting bolts, then remove the VSS.

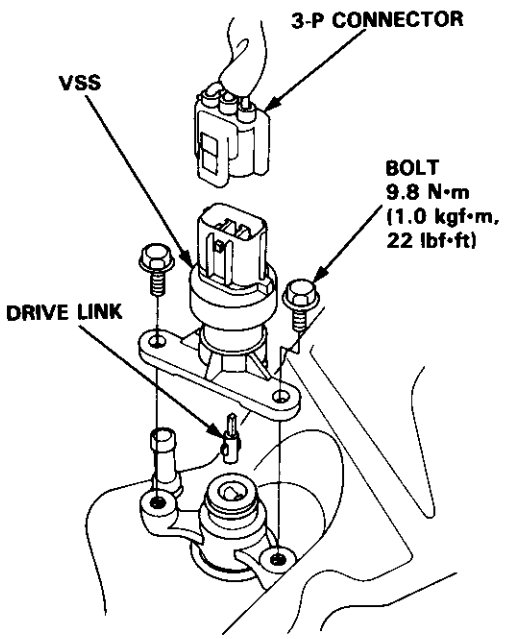

3. Install in the reverse order of removal.

   NOTE: The VSS drive link is a very small part; be careful not to lose it.

Engine Oil Pressure Indicator System

Engine Oil Pressure Switch Test

1. Remove the YEL/RED wire from the engine oil pressure switch.

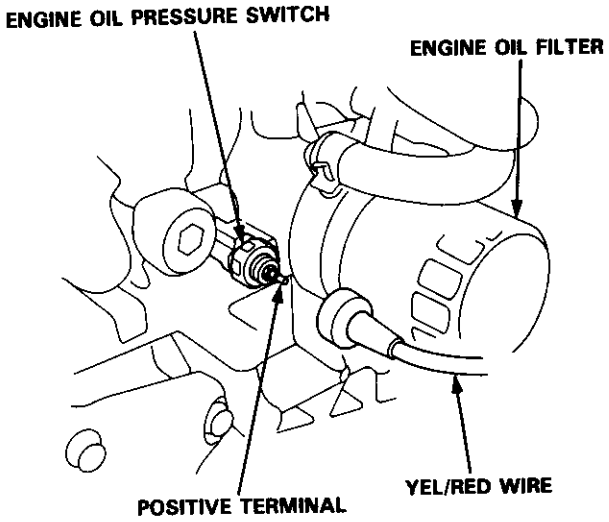

2. Check for continuity between the positive terminal and the engine (ground) with the ignition switch OFF.

   - If there is continuity, go to step 3.
   - If there is no continuity, replace the switch.

3. Check for continuity again, this time with the engine running.

   - If there is continuity, go to step 4.
   - If there is no continuity, the switch is OK.

4. Make sure engine oil level is OK, then check engine oil pressure (see section 8).

   - If engine oil pressure is OK, replace the switch.
   - If engine oil pressure is low, check the engine oil pump (see section 8) and, if necessary, replace it.

Fuel Gauge

Gauge Test

NOTE: Refer to page 23-116 for the fuel gauge system circuit.

1. Check the No. 15 (10 A) fuse in the under-dash fuse/relay box before testing.

2. Remove the rear seat (see section 20).

3. Remove the protective cover and access panel from the floor.

4. With the ignition switch OFF, disconnect the 3-P connector from the fuel gauge sending unit.

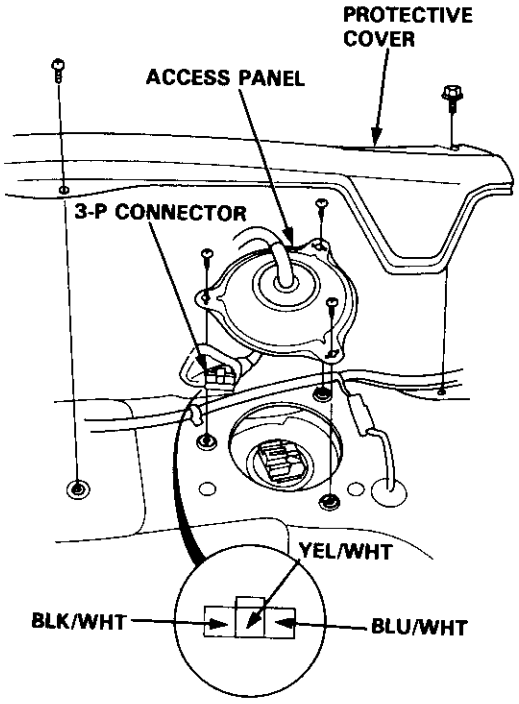

View from wire side

5. Connect the voltmeter positive probe to the YEL/WHT terminal and the negative probe to the BLK/WHT terminal, then turn the ignition switch ON (II). There should be between 5 and 8 V.

   - If the voltage is as specified, go to step 5.
   - If the voltage is not as specified, check for
     - an open in the YEL/WHT, BLU/WHT or BLK/WHT wire.
     - poor ground (G502).

6. Turn the ignition switch OFF. Attach a jumper wire between the BLK/WHT and YEL/WHT terminals, then turn the ignition switch ON (II).
   Check that the pointer of the fuel gauge starts moving toward the "F" mark.

   CAUTION: Turn the ignition switch OFF before the pointer reaches "F" on the gauge dial. Failure to do so may damage the fuel gauge.

   NOTE: The fuel gauge is a bobbin (cross-coil) type gauge, hence the fuel level is continuously indicated even when the ignition switch is OFF, and the pointer moves more slowly than that of a bimetal type gauge.

   - If the pointer of the fuel gauge does not move at all, replace the gauge.
   - If the gauge is OK, inspect the fuel gauge sending unit.

Sending Unit Test/Replacement

⚠ WARNING Do not smoke while working on the fuel system. Keep open flames away from your work area.

1. Remove the rear seat (see section 20).
2. Remove the protective cover and access panel from the floor.
3. With the ignition switch OFF, disconnect the 3-P connector from the fuel gauge sending unit.
4. Remove the fuel gauge sending unit.

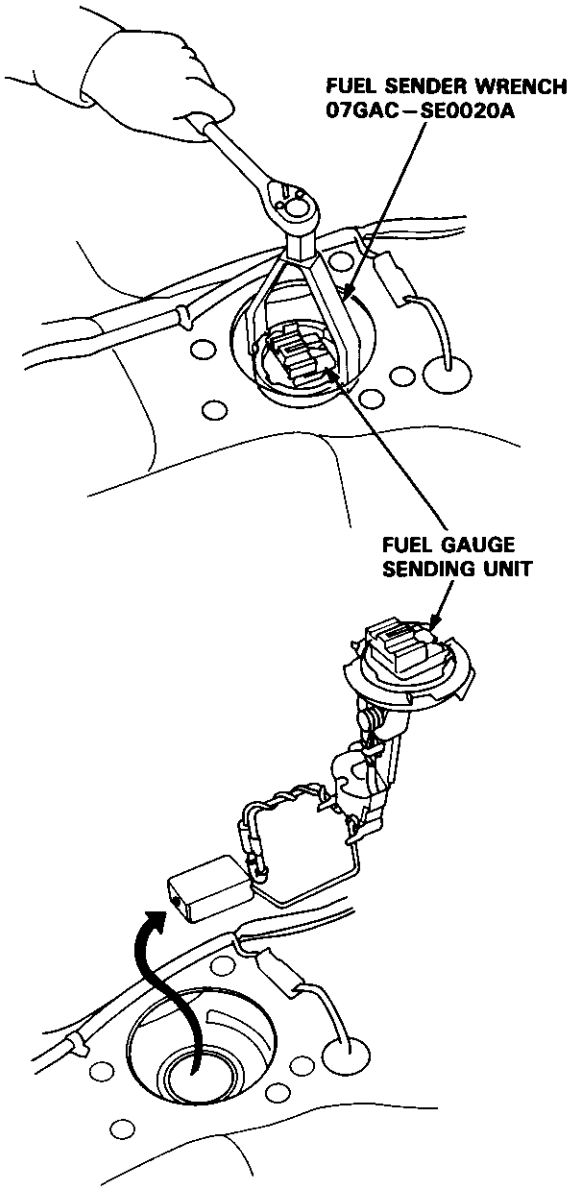

5. Measure the resistance between the A and B terminals at E (empty), 1/2 (half full) and F (full) by moving the float.

Float Position	E	1/2	F
Resistance (Ω)	105–110	25.5–39.5	2–5

6. Check the change in resistance by moving the float up and down.

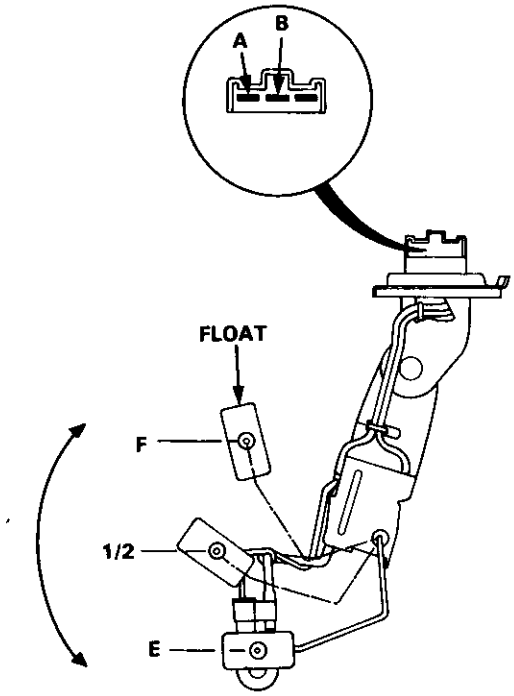

7. If unable to obtain the above readings or if resistance does not change, replace the fuel gauge sending unit.

Low Fuel Indicator

Indicator Light Test

NOTE: Refer to page 23-116 for the wiring description of the low fuel indicator circuit.

1. Park car on level ground.

   ⚠ WARNING Do not smoke while working on the fuel system. Keep open flames away from your work area. Drain fuel only into an approved container.

2. Drain fuel into an approved container. Then install the drain bolt with a new washer.

3. Add less than 8.2 ℓ (2.2 U.S.Gal, 1.8 Imp.Gal) of fuel and turn the ignition switch ON (II). The low fuel indicator light should come on within four minutes.

   - If the light does not come on, remove the access panel and disconnect the 3-P connector from the fuel gauge sending unit. Connect the A (BLK/WHT) terminal to the C (BLU/WHT) terminal with a jumper wire.
     - If the light comes on, the problem is either the sending unit or its ground.
     - If the light does not come on, the problem is an open in the BLU/WHT wire to the gauge assembly, no power to the gauge, or a blown bulb.

   - If the light comes on, add approx. 4 ℓ (1.1 U.S.Gal, 0.9 Imp.Gal) of fuel, the light should go off within four minutes.

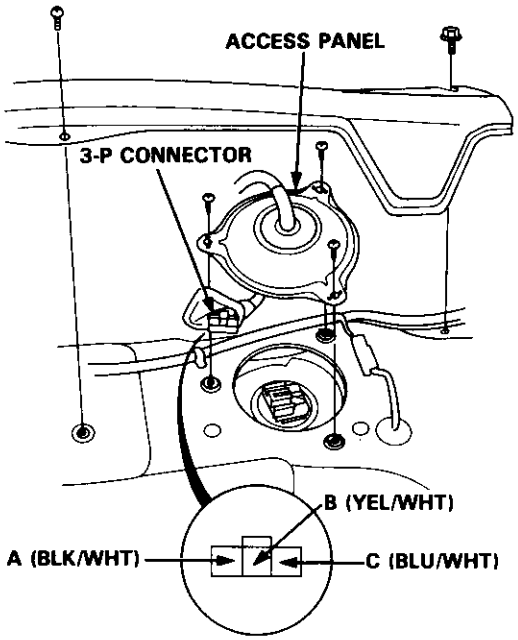

View from wire side

Seat Belt Reminder System

Seat Belt Switch Test

1. Slide the driver's seat to the middle position, then disconnect the 2-P connector from the back of the seat.

2. Check for continuity between the A and B terminals in each condition according to the table.

Condition \ Terminal	A	B
UNBUCKLED	○	○
BUCKLED		

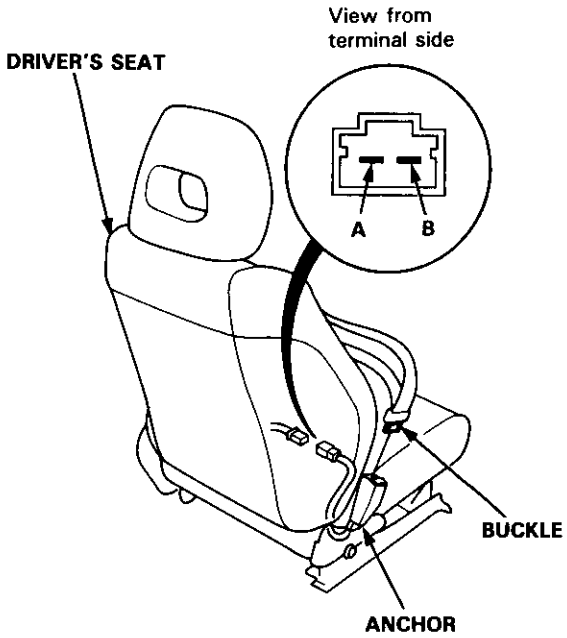

NOTE: Refer to page 23-146 for the seat belt reminder input test.

3. If necessary, replace the seat belt switch.

Engine Coolant Temperature (ECT) Gauge

Gauge Test

NOTE: Refer to page 23-116 for the wiring description of the engine coolant temperature (ECT) gauge circuit diagram.

1. Check the No. 15 (10 A) fuse in the under-dash fuse/relay box before testing.

2. Make sure the ignition switch is OFF, then disconnect the YEL/GRN wire from the ECT gauge sending unit and ground it with a jumper wire.

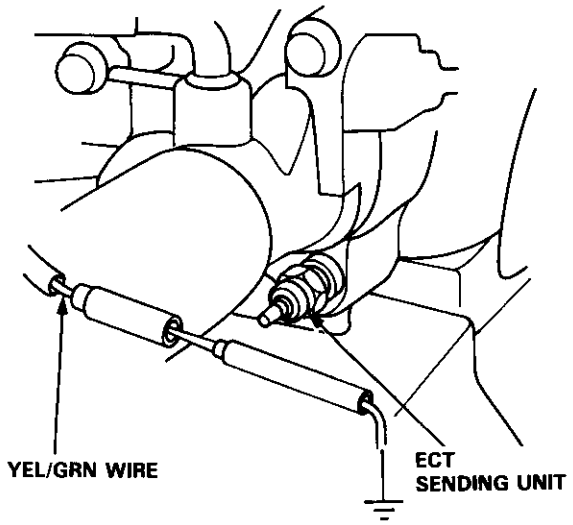

3. Turn the ignition switch ON (II).
   Check that the pointer of the ECT gauge starts moving toward the "H" mark.

   CAUTION: Turn the ignition switch OFF before the pointer reaches "H" on the gauge dial. Failure to do so may damage the gauge.

   - If the pointer of the gauge does not move at all, check for an open in the YEL or YEL/GRN wire. If the wires are OK, replace the ECT gauge.
   - If the ECT gauge works, test the ECT sending unit.

ECT Sending Unit Test

1. Disconnect the YEL/GRN wire from the ECT sending unit.

2. With the engine cold, use an ohmmeter to measure resistance between the positive terminal and the engine (ground).

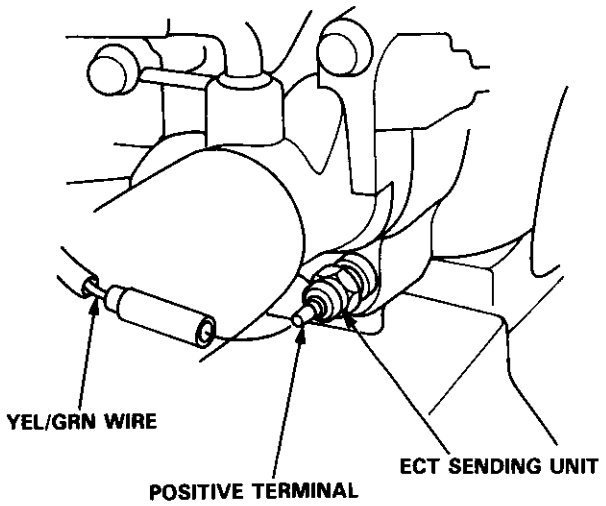

3. Check the temperature of the coolant.

4. Run the engine and measure the change in resistance with the engine at operating temperature (the radiator fan comes on).

Temperature	133°F (56°C)	185°F (85°C)–212°F (100°C)
Resistance (Ω)	137	46–30

5. If the obtained readings are substantially different from the specifications above, replace the ECT sending unit.

Brake System Indicator

Parking Brake Switch Test

1. Remove the floor console, and disconnect the connector from the switch.

2. Check for continuity between the positive terminal and body ground in each lever position according to the table.

Terminal / Lever position	POSITIVE	BODY
UP	○	○
DOWN		

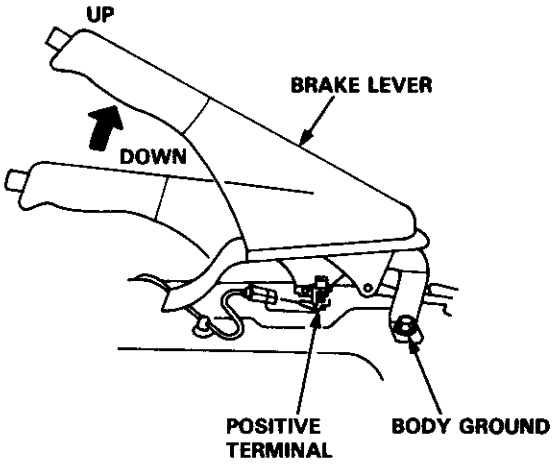

Canada:
If the parking brake switch is OK, but the brake system indicator does not function, perform the input test for the daytime running lights control unit (see page 23-156).

Brake Fluid Level Switch Test

1. Remove the reservoir cap.

2. Check that the float moves up and down freely, if it does not, replace the reservoir cap assembly.

3. Check for continuity between the terminals in each float position according to the table.

Terminal / Float position	POSITIVE	NEGATIVE
UP		
DOWN	○	○

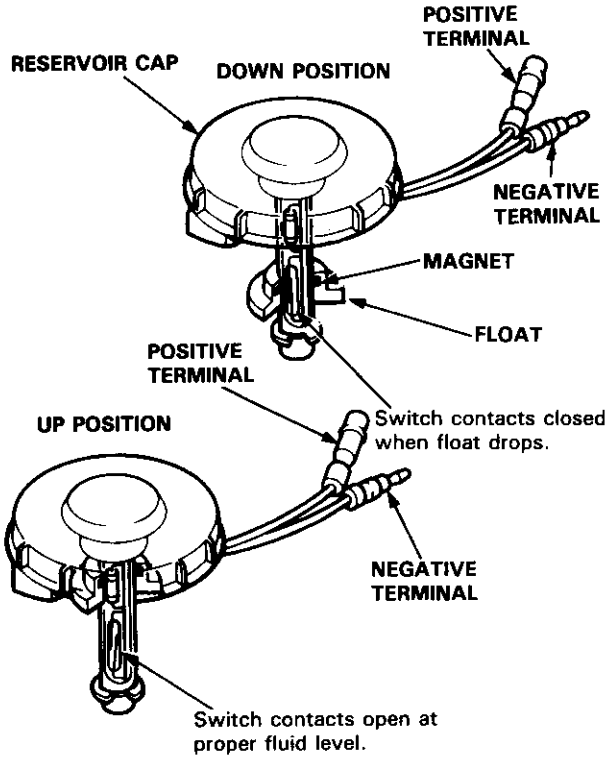

4. If necessary, replace the reservoir cap assembly.

Maintenance Reminder System

Component Location Index

CAUTION:

- **All SRS electrical wiring harnesses are covered with yellow insulation.**
- **Before disconnecting any part of the SRS wire harness, connect the short connector(s).**
- **Replace the entire affected SRS harness assembly if it has an open circuit or damaged wiring.**

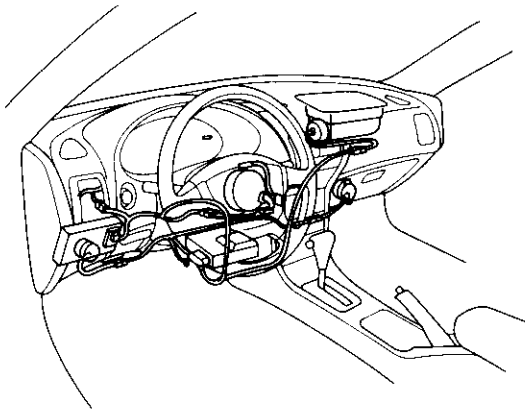

MAINTENANCE REMINDER LIGHT
(In the gauge assembly)
Gauge Assembly, page 23-113

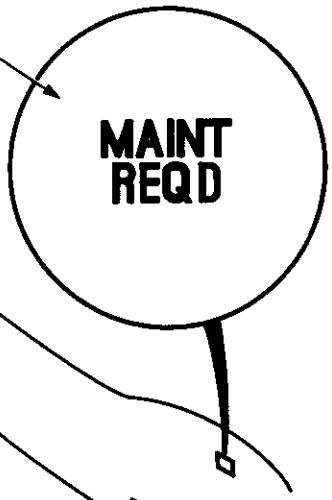

VEHICLE SPEED SENSOR (VSS)
(On the transmission housing)
Test, page 23-120, 121
Input Test, page 23-120
Replacement, page 23-122

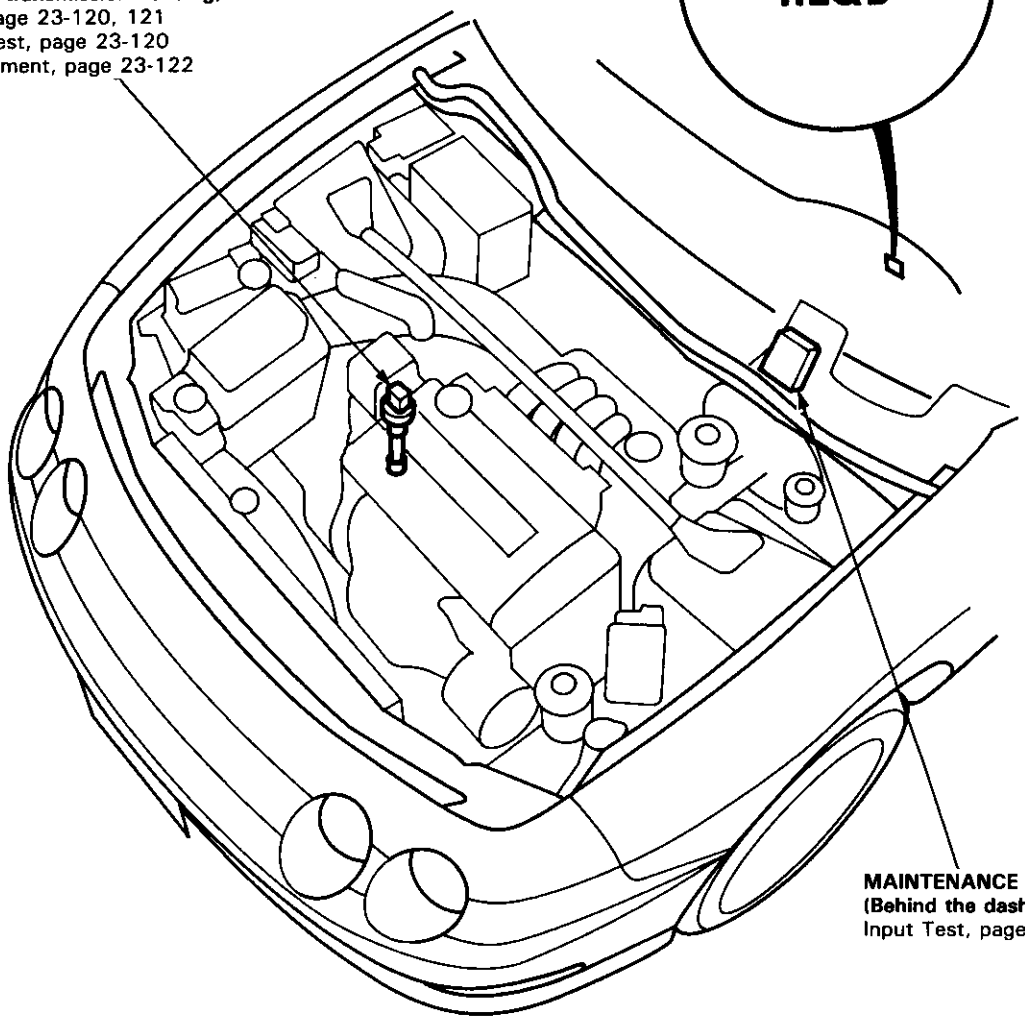

MAINTENANCE REMINDER UNIT
(Behind the dashboard lower cover)
Input Test, page 23-131

Description

Based on signals received from the vehicle speed sensor (VSS), the microcomputer in the maintenance reminder unit, which is located behind the dashboard lower cover, computes the distances traveled. When you turn the ignition switch on, the reminder light in the gauge assembly will come on for two seconds (bulb check function). At 9,650 ± 160 km (6,000 ± 100 miles) intervals, the reminder light will glow for two seconds and then blink ten seconds after you turn the ignition switch on. This will repeat every time you turn the ignition switch on until the car reaches 12,070 ± 160 km (7,500 ± 100 miles).
Beyond the 12,070 ± 160 km (7,500 ± 100 mile) interval, the light will continue to glow after the bulb check until you turn the ignition switch off or reset the unit.
To reset the unit, the car must be parked and the ignition switch must be on. Press the reset button on the unit for more than three seconds, and the reminder light will go off.

NOTE:
- Turn the ignition switch OFF before you remove the 5-P connector from the maintenance reminder unit, otherwise you will cancel all data in the memory.
- The data will remain in the memory even when the ignition switch is turned off, or if the unit is disconnected. When the ignition switch is turned on, and the car is driven, additional data will be stored.

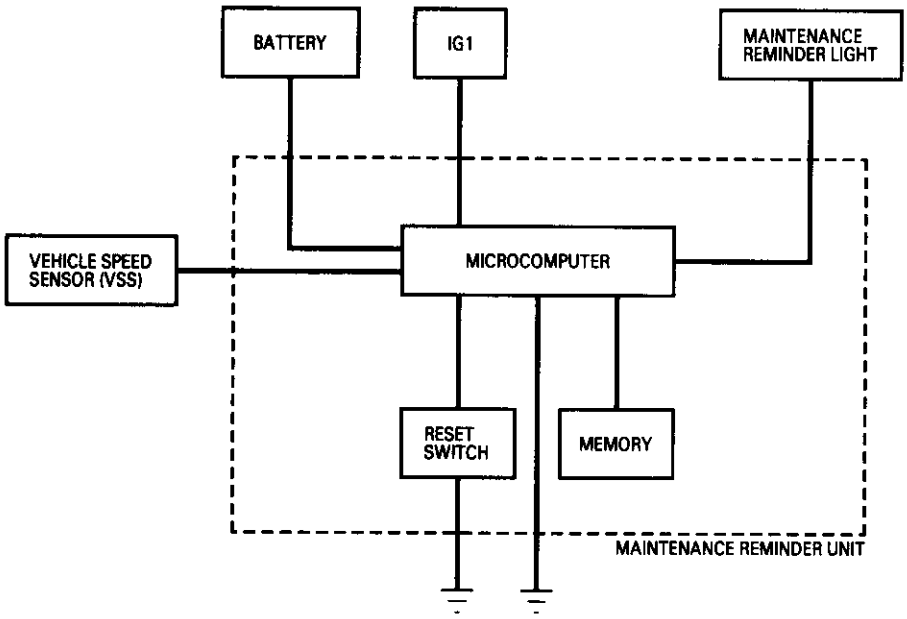

Maintenance Reminder System

Circuit Diagram

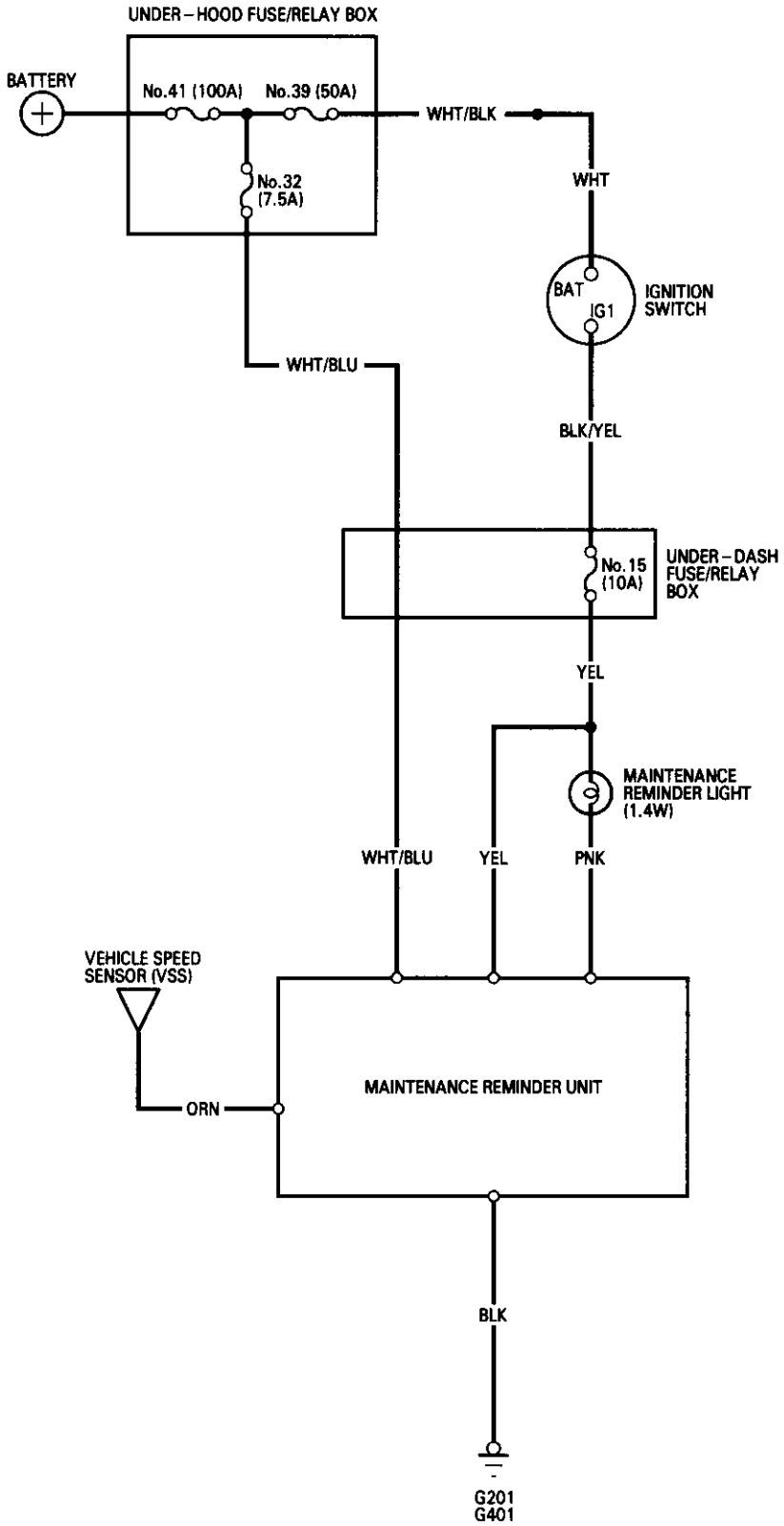

Maintenance Reminder Unit Input Test

1. With the ignition switch OFF, disconnect the 5-P connector from the reminder unit.

2. Inspect the connector and socket terminals to be sure they are all making good contact.

   - If the terminals are bent, loose or corroded, repair them as necessary, and recheck the system.

   - If the terminals look OK, make the following input tests at the connector.
     - If a test indicates a problem, find and correct the cause, then recheck the system.
     - If all the input tests prove OK, the reminder unit must be faulty; replace it.

View from wire side

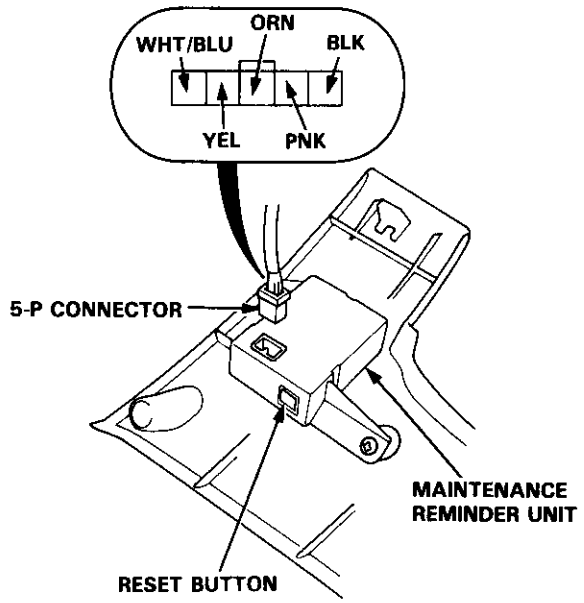

No.	Wire	Test condition	Test: Desired result	Possible cause if result is not obtained
1	BLK	Under all conditions	Check for continuity to ground: There should be continuity.	• Poor ground (G201, G401) • An open in the wire
2	WHT/BLU	Under all conditions	Check for voltage to ground: There should be battery voltage.	• Blown No. 32 (7.5 A) fuse in the under-hood fuse/relay box • An open in the wire
3	YEL	Ignition ON (II)	Check for voltage to ground: There should be battery voltage.	• Blown No. 15 (10 A) fuse in the under-dash fuse/relay box • An open in the wire
4	PNK	Ignition ON (II)	Connect to body ground: The reminder light should go on.	• Blown No. 15 (10 A) fuse in the under-dash fuse/relay box • Blown bulb • An open in the wire
5	ORN	Ignition ON (II), car in neutral with front of car raised, one wheel rotated with other wheel blocked	Check for voltage to ground: Meter should indicate pulsing voltage.	• Faulty vehicle speed sensor (VSS) • An open in the wire

A/T Gear Position Indicator

Component Location Index

CAUTION:

- **All SRS electrical wiring harnesses are covered with yellow insulation.**
- **Before disconnecting any part of the SRS wire harness, connect the short connector(s).**
- **Replace the entire affected SRS harness assembly if it has an open circuit or damaged wiring.**

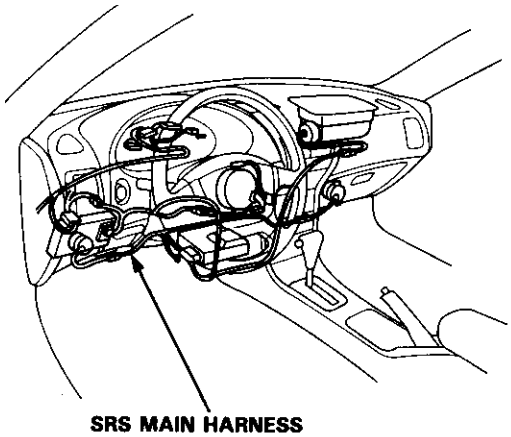

SRS MAIN HARNESS
(Covered with yellow insulation)

GAUGE ASSEMBLY
Removal, page 23-118
Disassembly, page 23-119
Bulb Locations, page 23-115
INTERLOCK SYSTEM
Description, page 23-139

A/T GEAR POSITION INDICATOR
Input Test, page 23-134

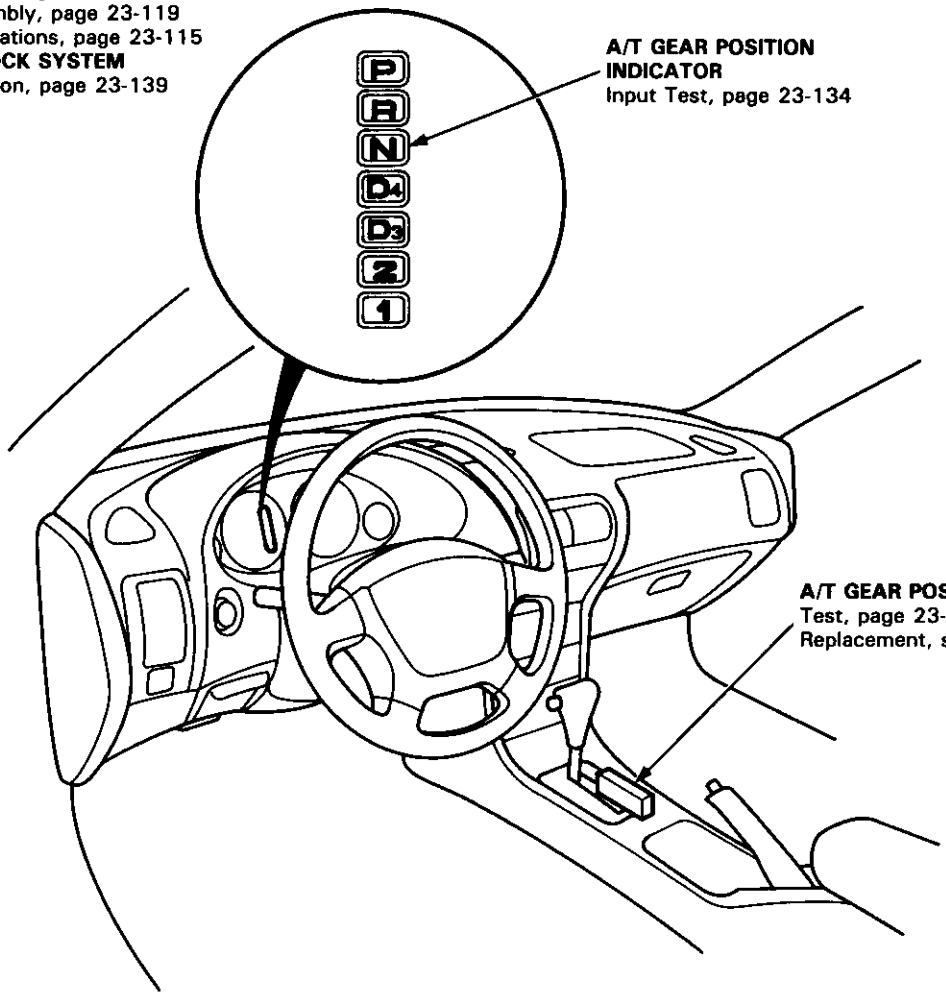

A/T GEAR POSITION SWITCH
Test, page 23-136
Replacement, section 14

Circuit Diagram

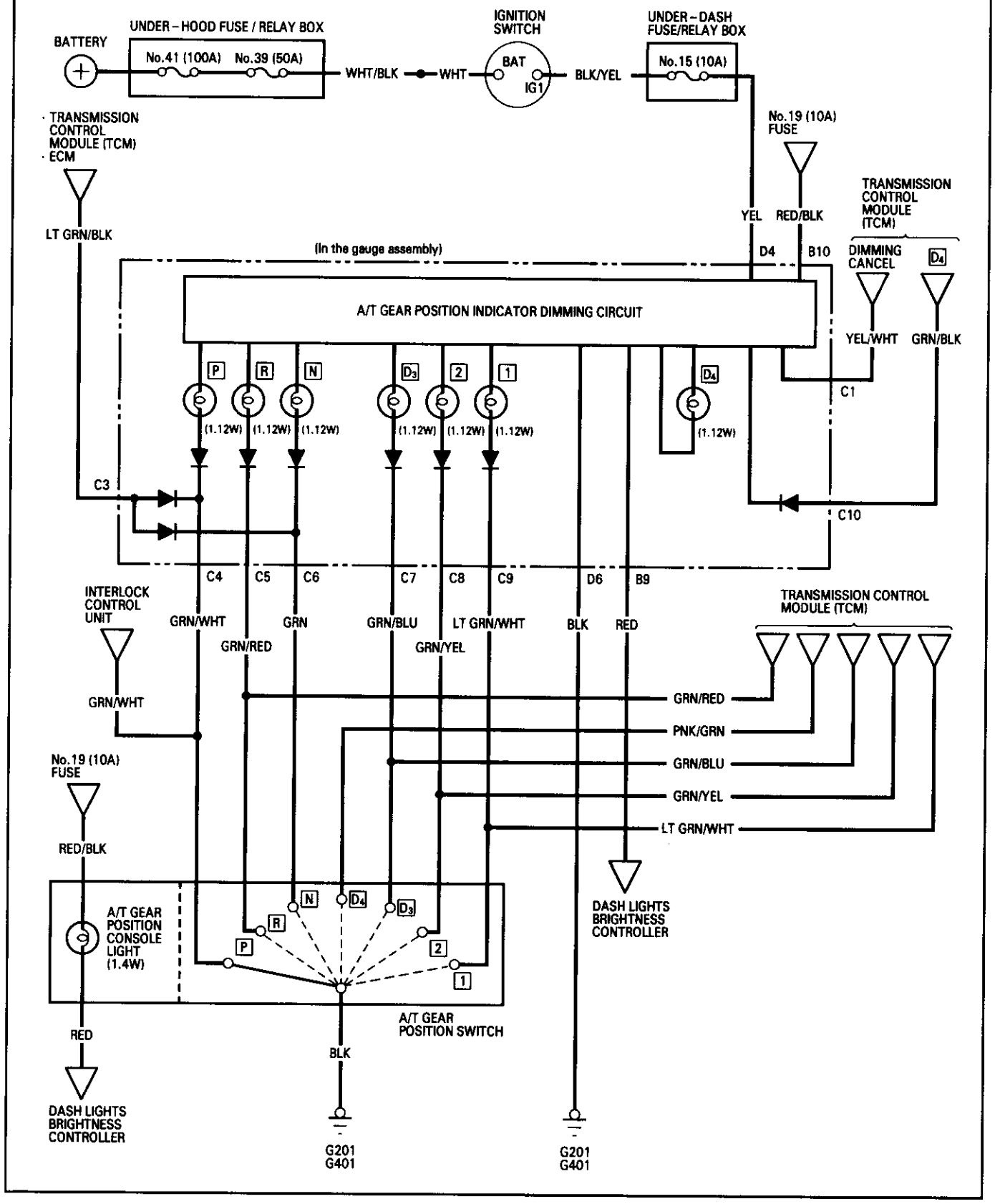

Indicator Input Test

CAUTION:

- **All SRS electrical wiring harnesses are covered with yellow insulation.**
- **Before disconnecting any part of the SRS wire harness, connect the short connector(s).**
- **Replace the entire affected SRS harness assembly if it has an open circuit or damaged wiring.**

Remove the gauge assembly from the dashboard (see page 23-118), and disconnect connectors "B", "C" and "D" from it. Inspect the connector terminals to be sure they are all making good contact.

- If the terminals are bent, loose or corroded, repair them as necessary, and recheck the system.
- If the terminals look OK, make the following input tests at the connector.
  - If any test indicates a problem, find and correct the cause, then recheck the system.
  - If all the input tests prove OK, the gauge assembly must be faulty; replace it.

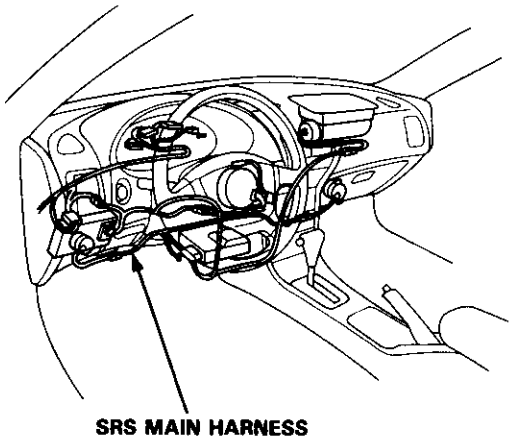

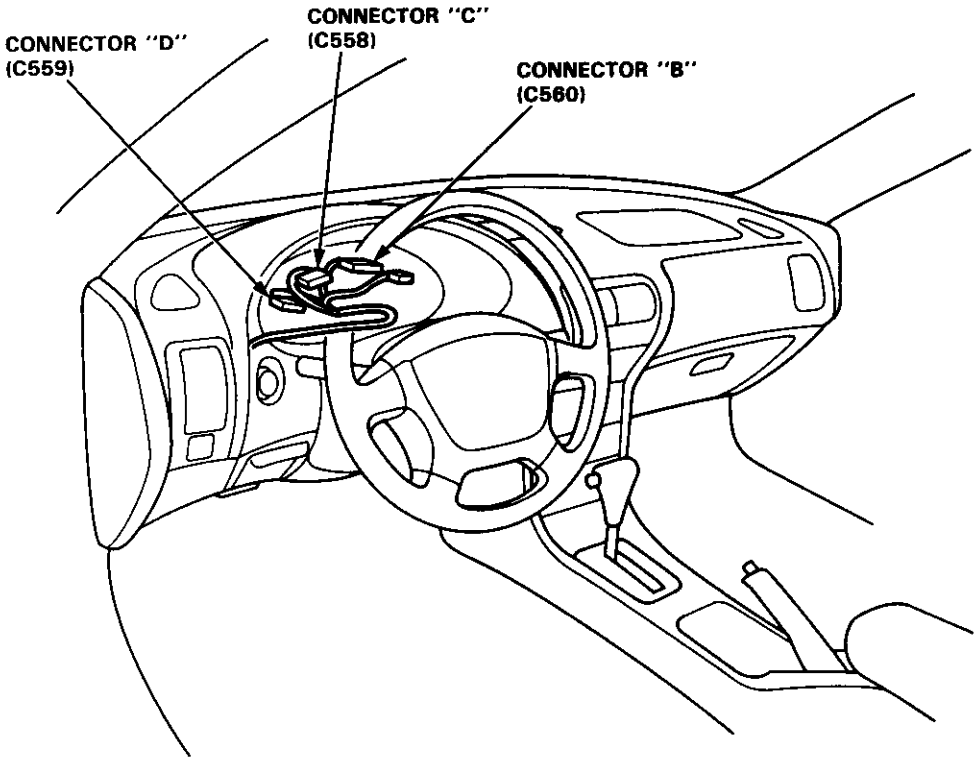

CONNECTOR "D": View from wire side of female terminals

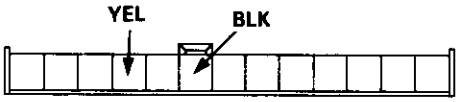

No.	Wire	Test condition	Test: Desired result	Possible cause if result is not obtained
1	BLK	Under all conditions	Check for continuity to ground: There should be continuity.	• Poor ground (G201, G401) • An open in the wire
2	YEL	Ignition switch ON (II)	Check for voltage to ground: There should be battery voltage.	• Blown No. 15 (10 A) fuse in the under-dash fuse box • An open in the wire

CONNECTOR "B": View from wire side of female terminals

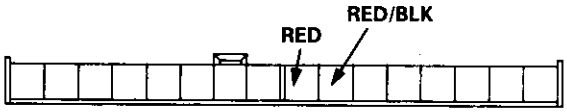

No.	Wire	Test condition	Test: Desired result	Possible cause if result is not obtained
1	RED/BLK and RED	Combination light switch ON and dash lights brightness control dial on full bright	Check for voltage between RED/BLK and RED terminals: There should be battery voltage.	• Faulty dash lights brightness control system • An open in the wire

CONNECTOR "C": View from wire side of female terminals

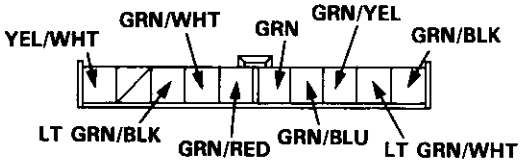

No.	Wire	Test condition	Test: Desired result	Possible cause if result is not obtained
1	GRN/WHT	Shift lever in position P NOTE: Don't push the brake pedal.	Check for continuity to ground: There should be continuity. NOTE: There should be no continuity in any other position.	• Faulty A/T gear position switch • Poor ground • An open in the wire
	GRN/RED	Shift lever in position R		
	GRN	Shift lever in position N		
	GRN/BLU	Shift lever in position D_3		
	GRN/YEL	Shift lever in position 2		
	LT-GRN/WHT	Shift lever in position 1		
2	GRN/BLK	Ignition switch ON (II) and shift lever in any position except D_4	Check for voltage to ground: There should be battery voltage for two seconds after the ignition switch is turned ON, and less than 1 V two seconds later.	• Faulty transmission control module (TCM) • An open in the wire
3	YEL/WHT	Ignition switch ON (II) and shift lever in any position except D_4	Check for voltage to ground: There should be less than 1 V for two seconds after the ignition switch is turned ON and more than 5 V two seconds later.	• Faulty transmission control module (TCM) • An open in the wire
4	LT-GRN/BLK	Ignition switch ON (II)	Check for voltage to ground: There should be more than 5 V	• Faulty transmission control module (TCM) or ECM • An open in the wire

A/T Gear Position Indicator

A/T Gear Position Switch Test

1. Remove the console, then disconnect the 14-P connector from the switch.

2. Check for continuity between the terminals in each position according to the table.

   - Move the lever back and forth at each position without touching the push button, and check for continuity within the range of free play.
   - If there is no continuity within the range of free play, adjust the installing position of the switch as described on the next page.

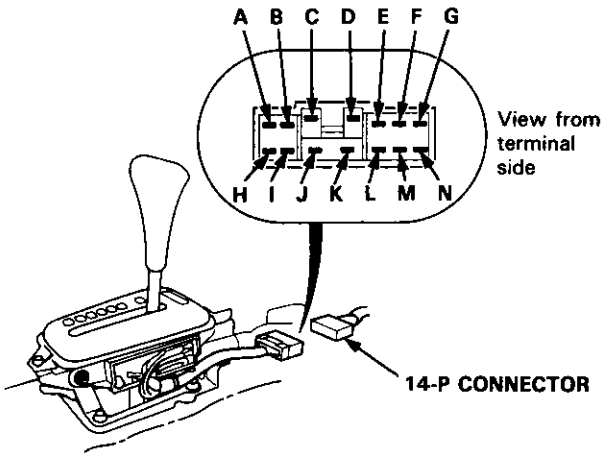

A/T Gear Position Switch (Without cruise control)

Terminal / Position		A	B	E	F	G	N	M	L	Back – up Light Switch C	Back – up Light Switch D	Neutral Position Switch J	Neutral Position Switch K
1		○	○										
2		○		○									
D3		○			○								
D4		○				○							
N		○					○					○	○
R		○						○		○	○		
P		○							○			○	○

A/T Gear Position Switch (With cruise control)

Terminal / Position	I	A	B	E	F	G	N	M	L	Back – up Light Switch C	Back – up Light Switch D	Neutral Position Switch J	Neutral Position Switch K
1		○	○										
2	○	○		○									
D3	○	○			○								
D4	○	○				○							
N		○					○					○	○
R		○						○		○	○		
P		○							○			○	○

A/T Gear Position Switch Replacement

1. Remove the console, then disconnect the 14-P connector from the switch.

2. Remove the two console switch mounting nuts.

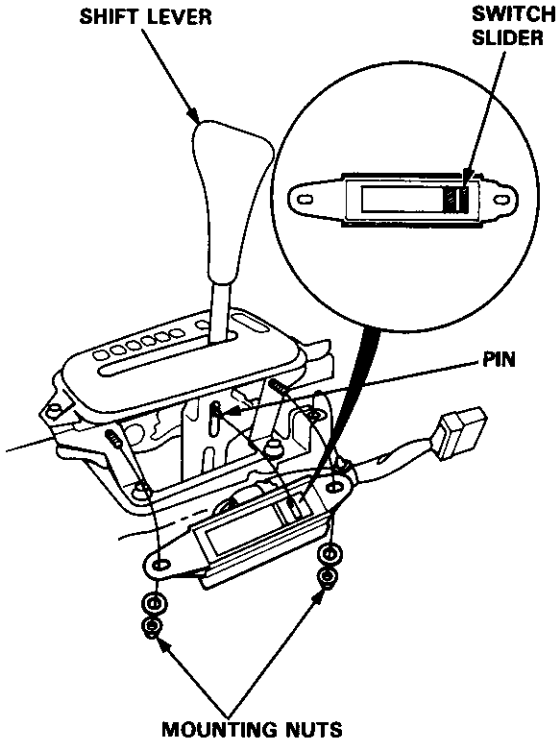

3. Position the switch slider to "Neutral" as shown above.

4. Move the shift lever to "Neutral", then slip the switch into position.

5. Attach the switch with the two nuts.

6. Test the switch in the [P] and [N] position of the shift lever. The engine should start when the shift lever is in position [P] anywhere in the range of free play.

7. Connect the 14-P connector, clamp the harness and install the console.

A/T Gear Position Switch Adjustment

1. Shift to the [P] position, and loosen the nuts.

2. Slide the switch in the direction of [D4] position [within 2.0 mm (0.079 in.)] so that there is continuity between the "A" and "L" terminals in the range of free play of the shift lever.

3. Recheck for continuity between each of the terminals.

NOTE:
- If adjustment is not possible, check for damage to the shift lever detent and/or the bracket. If there is no damage, replace the console switch.
- The engine should start when the shift lever is in position [N] in the range of free play.

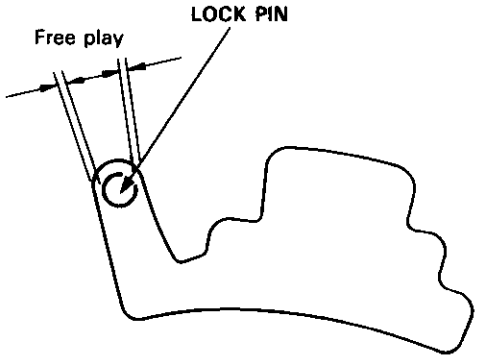

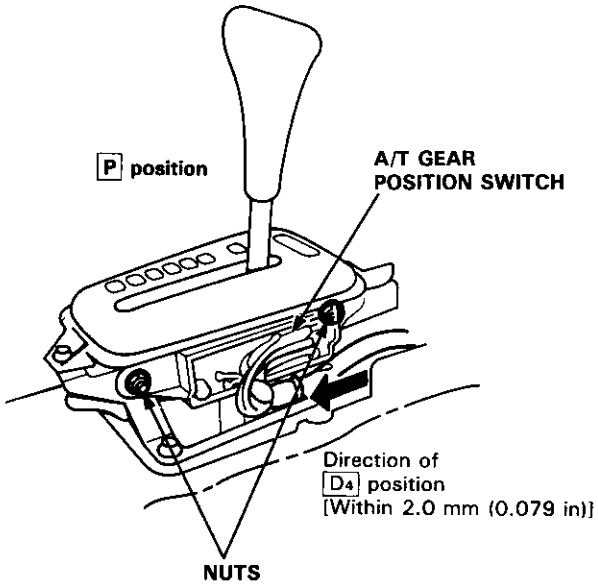

Interlock System

Component Location Index

CAUTION:

- **All SRS electrical wiring harnesses are covered with yellow insulation.**
- **Before disconnecting any part of the SRS wire harness, connect the short connector(s).**
- **Replace the entire affected SRS harness assembly if it has an open circuit or damaged wiring.**

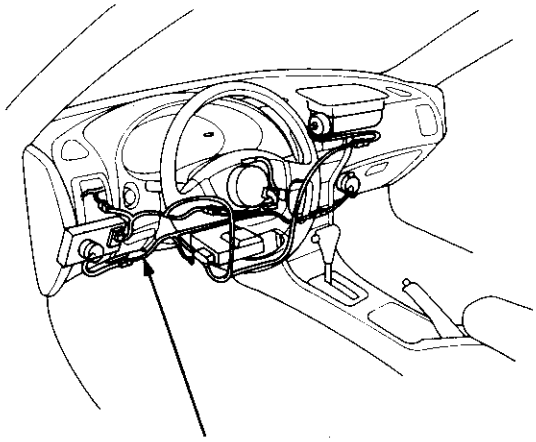

SRS MAIN HARNESS
(Covered with yellow insulation)

INTERLOCK CONTROL UNIT
Input Test, page 23-141

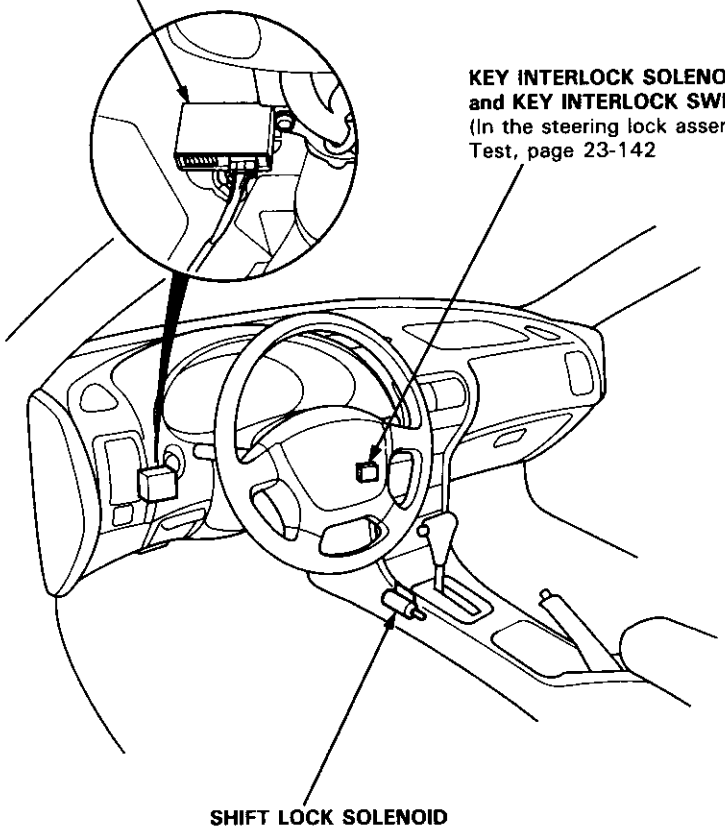

KEY INTERLOCK SOLENOID and KEY INTERLOCK SWITCH
(In the steering lock assembly)
Test, page 23-142

SHIFT LOCK SOLENOID
Test, page 23-143
Replacement, page 23-143

Description

The car is equipped with the following devices to prevent inadvertent shifting:

- A/T selector with shift lock
- Key cylinder with interlocked ignition key

Shift Lock System:
The shift lock system prevents the shift lever from moving to [R] or [D4] from the [P] position unless the brake pedal is depressed and the accelerator is in its rest position.

NOTE:
- The shift lever cannot be shifted when the brake pedal and the accelerator are depressed on at the same time.
- In case of system malfunction, the shift lever can be released by pushing a key into the release slot near the shift lever.

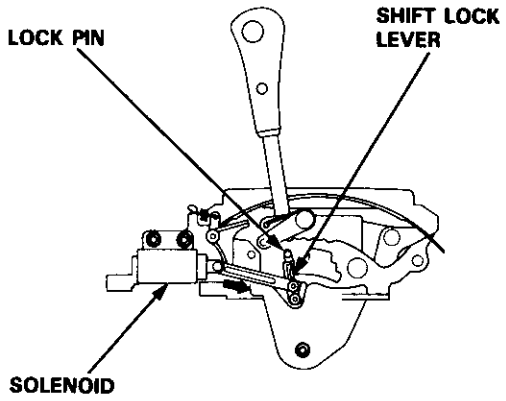

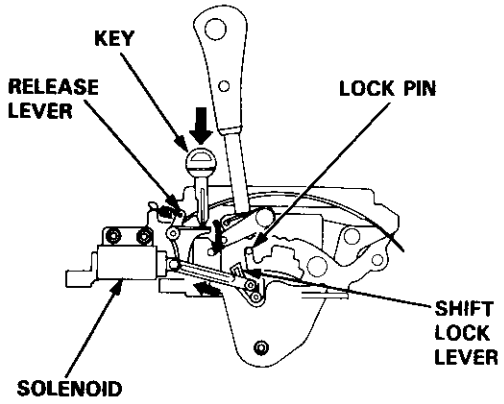

Key Interlock System:
The ignition key cannot be removed from the ignition switch unless the shift lever is in the [P] position.
When the shift lever is in any position other than [P], a solenoid is activated, making it impossible for the key to be removed until the shift lever is moved to the [P] position.

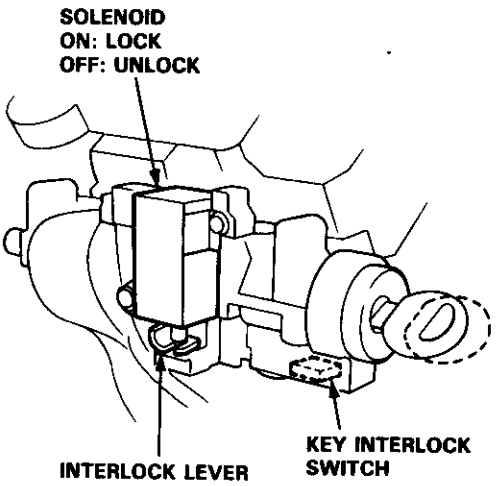

The shift lever is in the [P] position.

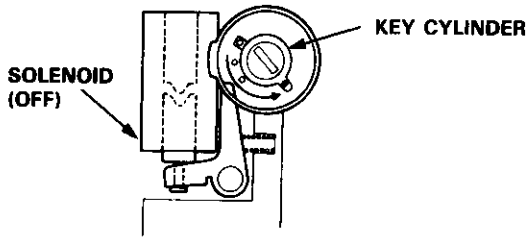

The shift lever is in any position except [P].

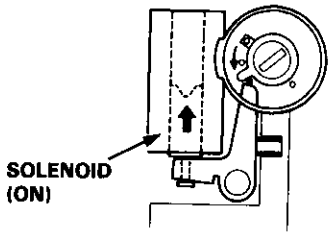

Interlock System

Circuit Diagram

NOTE: Different wires with the same color have been given a number suffix to distinguish them (for example, GRN/WHT [1] and GRN/WHT [2] are not the same).

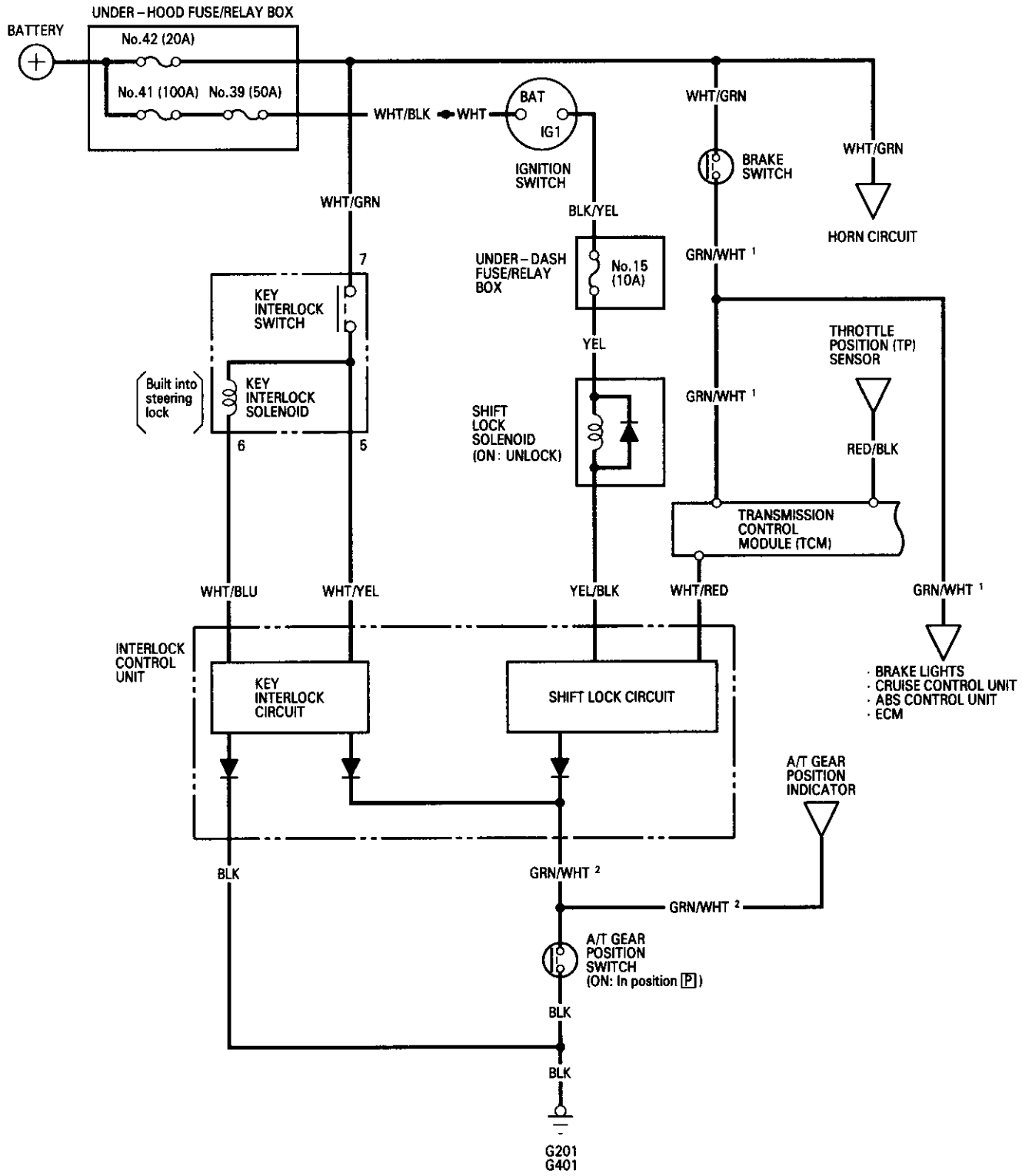

Control Unit Input Test

Disconnect the 8-P connector from the interlock control unit. Check for good contact between the connector and socket terminals. If the terminals are OK, make following input tests at the connector. If all input tests are OK, but the problem remains, replace the control unit.

NOTE: If the shift lock solenoid clicks when the ignition switch is ON and the brake pedal is pushed (shift lever is in [P] position, accelerator is in rest position), the shift lock system is electronically normal; test the A/T gear position switch as described on page 23-134.

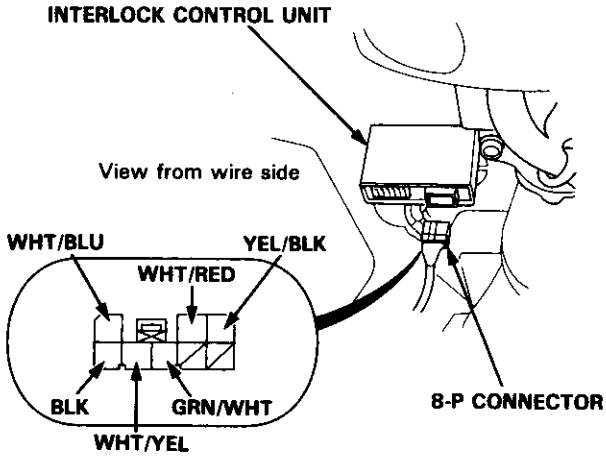

Shift Lock System:

No.	Wire	Test condition	Test: Desired result	Possible cause if result is not obtained
1	WHT/RED	Ignition switch ON (II) Brake pedal pushed	Check for voltage to ground: There should be battery voltage.	• Blown No. 41 (15 A) fuse in the under-hood fuse/relay box • Faulty transmission control module (TCM) • Faulty ECM • Faulty brake switch • Faulty throttle position (TP) sensor • An open in the wire
		Ignition switch ON (II), brake pedal and accelerator pushed at the same time	Check for voltage to ground: There should be less than battery voltage.	
2	GRN/WHT[2]	Shift lever in [P]	Check for continuity to ground: There should be continuity.	• Faulty A/T gear position switch • Poor ground (G201, G401) • An open in the wire
3	YEL/BLK	Ignition witch ON (II)	Check for voltage to ground: There should be battery voltage.	• Blown No. 15 (10 A) fuse in the under-dash fuse/relay box • Faulty shift lock solenoid • An open in the wire

Key Interlock System:

No.	Wire	Test condition	Test: Desired result	Possible cause if result is not obtained
1	BLK	Under all conditions	Check for continuity to ground: There should be continuity.	• Poor ground (G201, G401) • An open in the wire
2	GRN/WHT[2]	Shift lever in position [P]	Check for continuity to ground: There should be continuity.	• Faulty A/T gear position switch • Poor ground (G201, G401) • An open in the wire
3	WHT/YEL	Ignition switch turned to ACC (I) and the key pushed in	Check for voltage to ground: There should be battery voltage.	• Blown No. 42 (20 A) fuse in the under-hood fuse/relay box • Faulty steering lock assembly (key interlock solenoid) • An open in the wire
4	WHT/BLU	Ignition switch turned to ACC (I) and the key pushed in	Check for voltage to ground: There should be battery voltage.	• Blown No. 42 (20 A) fuse in the under-hood fuse/relay box • Faulty steering lock assembly (key interlock solenoid) • An open in the wire

Key Interlock Solenoid Test

CAUTION:
- **All SRS electrical wiring harnesses are covered with yellow insulation.**
- **Before disconnecting any part of the SRS wire harness, connect the short connector(s).**
- **Replace the entire affected SRS harness assembly if it has an open circuit or damaged wiring.**

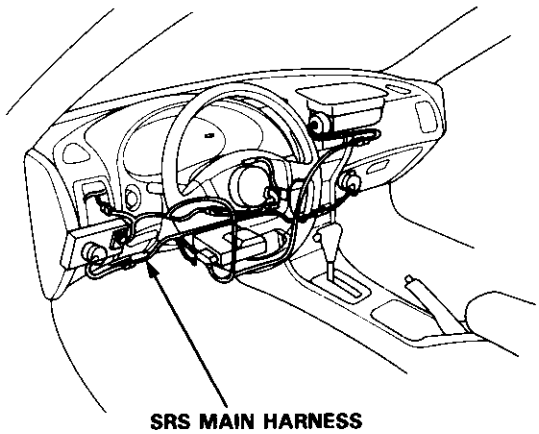

SRS MAIN HARNESS
(Covered with yellow insulation)

1. Remove the dashboard lower cover.
2. Remove the knee bolster.
3. Disconnect the 7-P connector from the main wire harness.

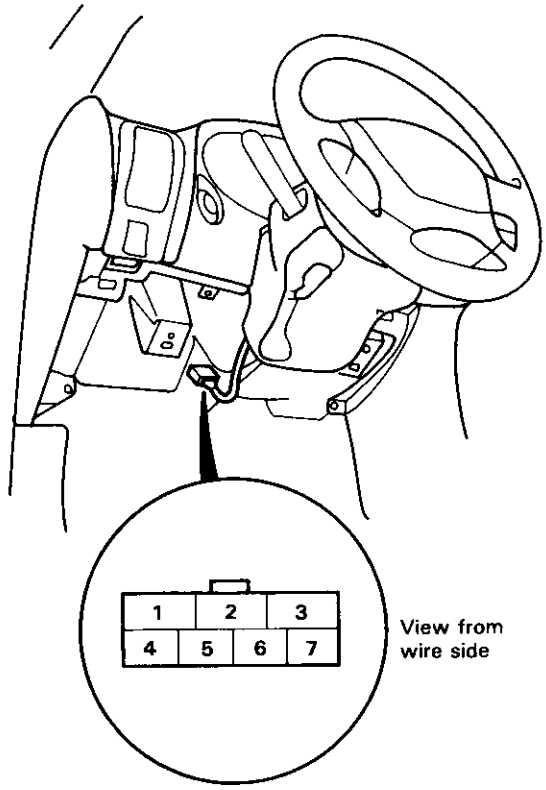

4. Check for continuity between the terminals in each switch position according to the table.

Position \ Terminal		5	6	7
Ignition switch ACC	Key pushed in	○	○	○
	Key released *	○	○	

* : 15 – 20 ohms

5. Check that the key cannot be removed when the battery is connected to the No. 6 and No. 7 terminals.
   - If the key cannot be removed, the key interlock solenoid is OK.
   - If the key can be removed, replace the steering lock assembly (key interlock solenoid is not available separately).

Shift Lock Solenoid Test/Replacement

1. Remove the console, then disconnect the 2-P connector of the shift lock solenoid from the main wire harness.

   NOTE: Do not connect power to the B (−) terminal (reverse polarity) or you will damage the diode inside the solenoid.

2. Connect battery power to the A terminal, ground the B terminal momentarily, and check solenoid operation.

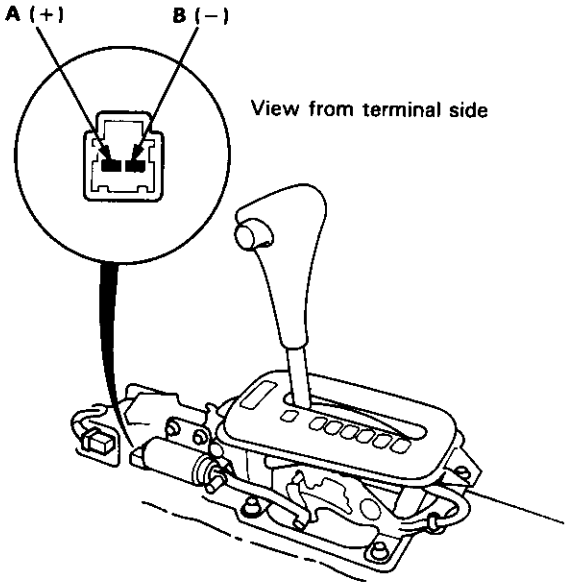

- If the solenoid does not operate, replace it as described in steps 3,4, and 5.
- If the solenoid does operate, check and, if necessary, adjust its two positions as shown in step 5.

3. Remove the shift lock collar and the solenoid pin.

4. Remove the self-locking nuts and shift lock solenoid, then install the new solenoid in the reverse order of removal.

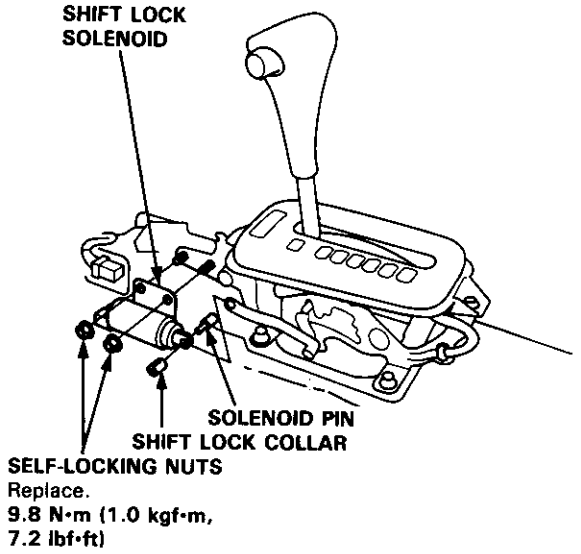

5. Check and, if necessary, adjust the solenoid's position.

   - When the shift lock solenoid is ON, check that there is a clearance of 2.5 ± 0.5 mm (0.098 ± 0.020 in) between the top rear corner of the shift lock lever and the lock pin groove, then tighten the self-locking nuts.

   NOTE: Use new self-locking nuts.

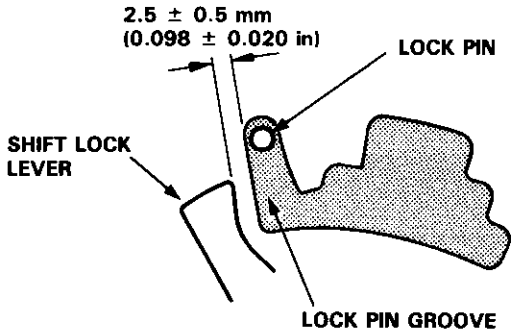

   - When the shift lock solenoid is OFF, make sure that the lock pin is blocked by the shift lock lever.

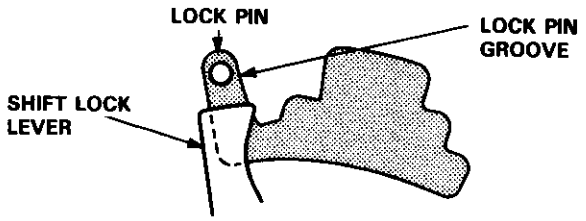

Integrated Control Unit

Circuit Diagram

Description

An integrated control unit, located in the left kick panel, integrates the functions of the key-in/seat belt reminder, side marker light flasher, wiper/washer, lights-on reminder, rear window defogger timer, brake system light bulb check, and engine oil pressure indicator flasher circuits.

NOTE: Different wires with the same color have been given a number suffix to distinguish them (for example, GRN/RED[1] and GRN/RED[2] are not the same).

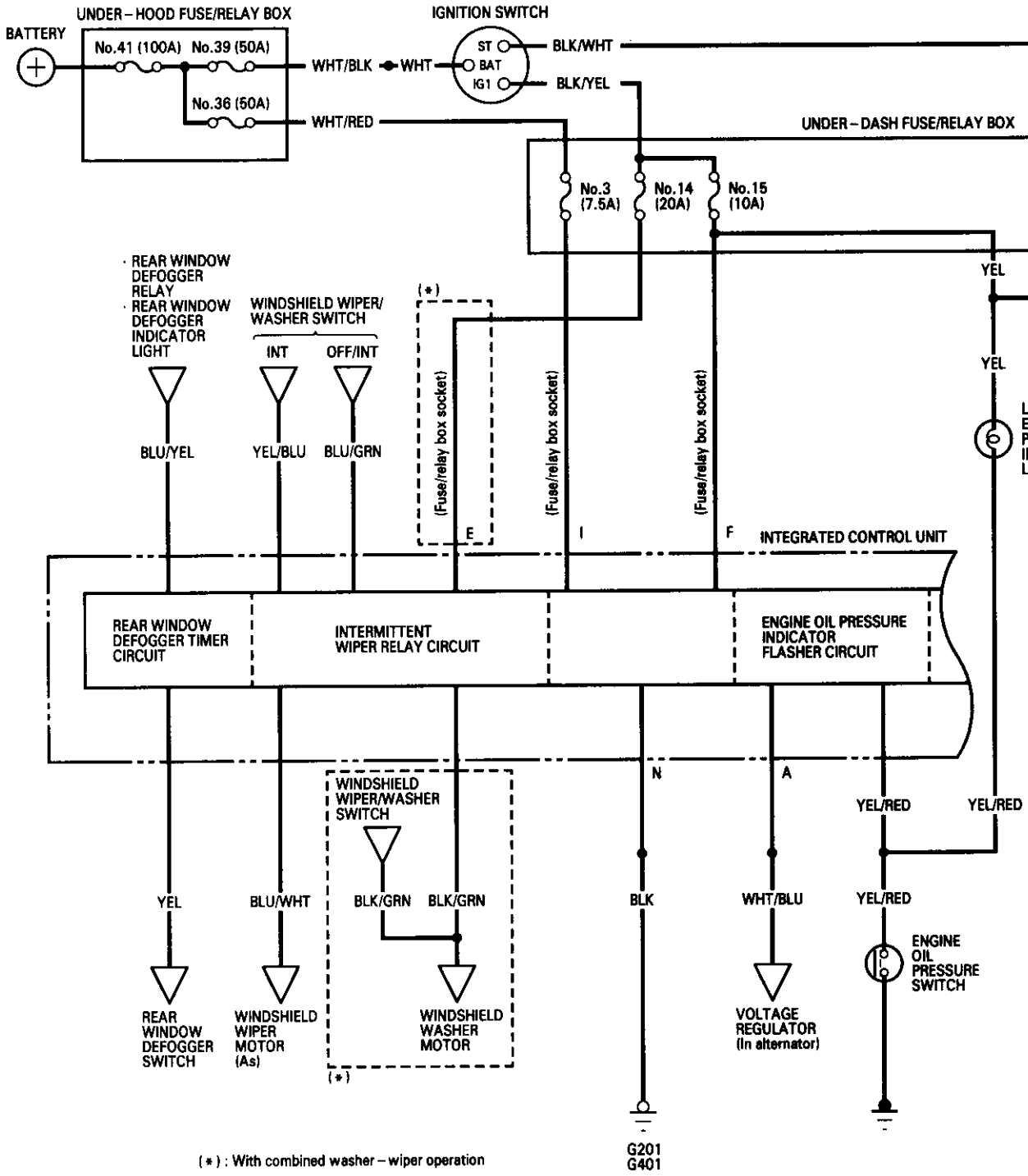

(*) : With combined washer – wiper operation

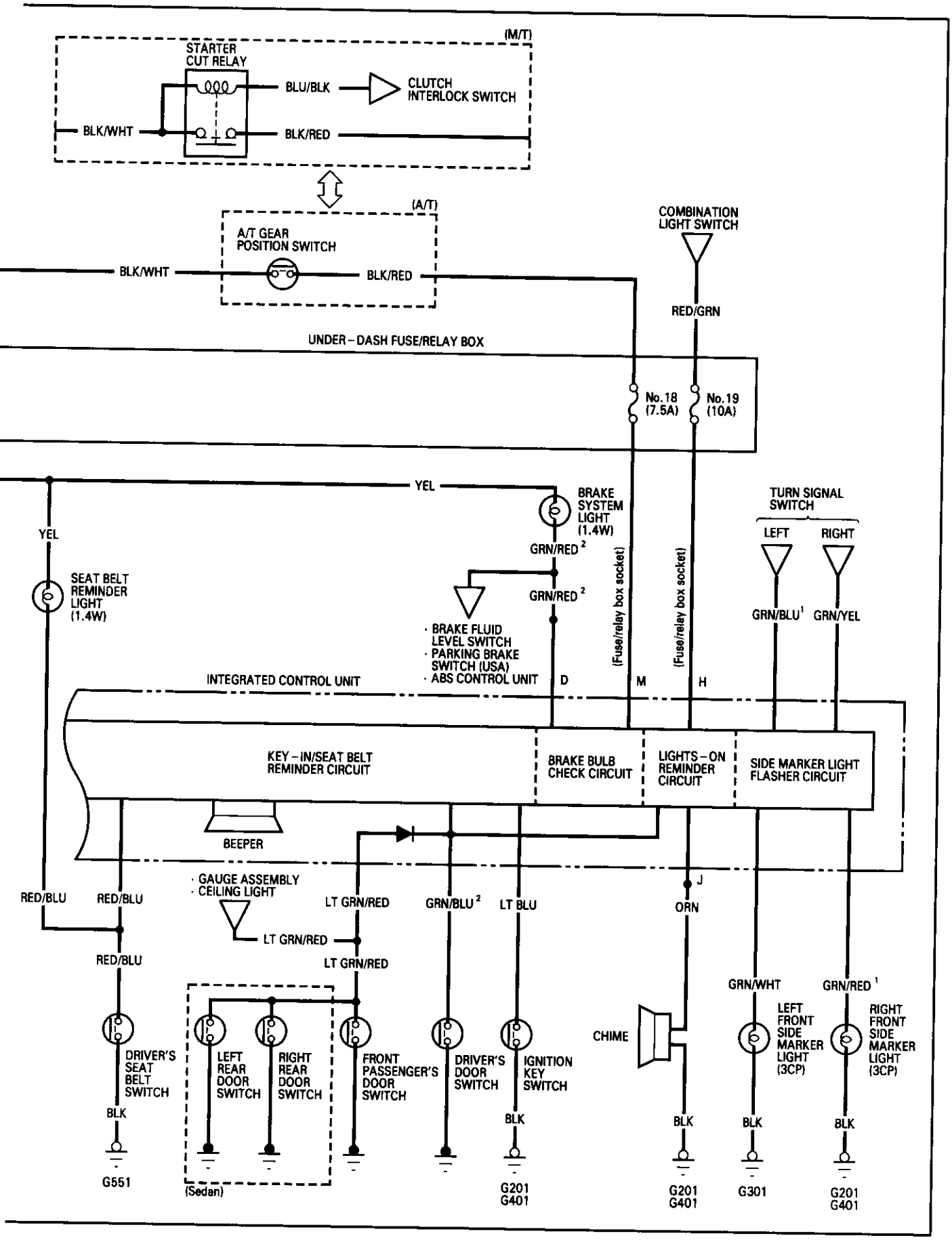
(M/T)
STARTER CUT RELAY
BLU/BLK
CLUTCH INTERLOCK SWITCH
BLK/WHT
BLK/RED
(A/T)
A/T GEAR POSITION SWITCH
BLK/WHT
BLK/RED
COMBINATION LIGHT SWITCH
RED/GRN
UNDER-DASH FUSE/RELAY BOX
No.18 (7.5A)
No.19 (10A)
YEL
YEL
BRAKE SYSTEM LIGHT (1.4W)
GRN/RED 2
GRN/RED 2
SEAT BELT REMINDER LIGHT (1.4W)
· BRAKE FLUID LEVEL SWITCH
· PARKING BRAKE SWITCH (USA)
· ABS CONTROL UNIT
(Fuse/relay box socket)
(Fuse/relay box socket)
TURN SIGNAL SWITCH
LEFT
RIGHT
GRN/BLU 1
GRN/YEL
INTEGRATED CONTROL UNIT
D
M
H
KEY-IN/SEAT BELT REMINDER CIRCUIT
BRAKE BULB CHECK CIRCUIT
LIGHTS-ON REMINDER CIRCUIT
SIDE MARKER LIGHT FLASHER CIRCUIT
BEEPER
· GAUGE ASSEMBLY
· CEILING LIGHT
LT GRN/RED
LT GRN/RED
LT GRN/RED
GRN/BLU 2
LT BLU
J
ORN
RED/BLU
RED/BLU
RED/BLU
GRN/WHT
GRN/RED 1
CHIME
DRIVER'S SEAT BELT SWITCH
LEFT REAR DOOR SWITCH
RIGHT REAR DOOR SWITCH
FRONT PASSENGER'S DOOR SWITCH
DRIVER'S DOOR SWITCH
IGNITION KEY SWITCH
LEFT FRONT SIDE MARKER LIGHT (3CP)
RIGHT FRONT SIDE MARKER LIGHT (3CP)
BLK
BLK
BLK
BLK
BLK
BLK
G551
(Sedan)
G201
G401
G201
G401
G301
G201
G401

Integrated Control Unit

Input Test

CAUTION:

- **All SRS electrical wiring harnesses are covered with yellow insulation.**
- **Before disconnecting any part of the SRS wire harness, connect the short connector(s).**
- **Replace the entire affected SRS harness assembly if it has an open circuit or damaged wiring.**

Remove the dashboard lower cover and knee bolster, then disconnect the 15-P connector from the integrated control unit.
Remove the integrated control unit from the under-dash fuse/relay box.

Inspect the connector and socket terminals to be sure they are all making good contact.

- If the terminals are bent, loose or corroded, repair them as necessary, and recheck the system.
- If the terminals look OK, make the following input tests at the connector and under-dash fuse/relay box.
  - If any test indicates a problem, find and correct the cause, then recheck the system.
  - If all the input tests prove OK, the control unit must be faulty; replace it.

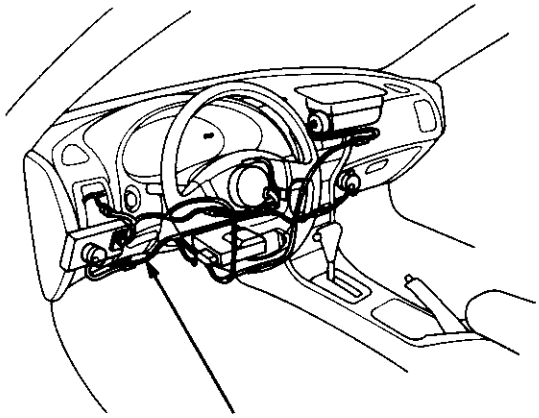

SRS MAIN HARNESS
(Covered with yellow insulation)

NOTE:

- Different wires with the same color have been given a number suffix to distinguish then (for example, GRN/BLU[1] and GRN/BLU[2] are not the same).
- Do not disconnect any connectors on the under-dash fuse/relay box except the integrated control unit.

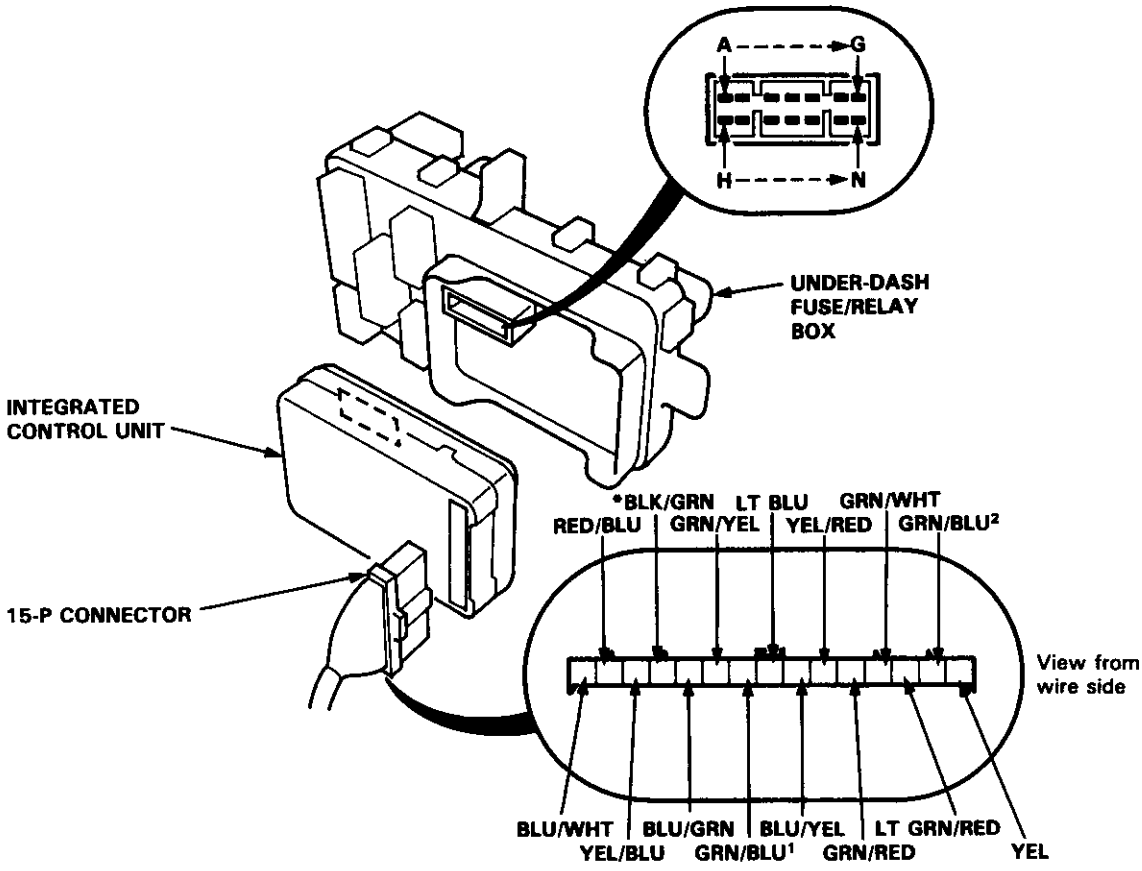

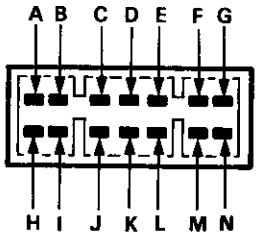

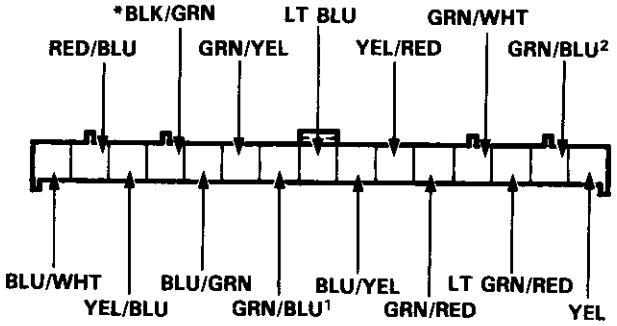

View from wire side

All Systems:

No.	Terminal	Test condition	Test: Desired result	Possible cause if result is not obtained
1	N	Under all conditions	Check for continuity to ground: There should be continuity.	• Poor ground (G201, G401) • An open in the wire
2	I	Under all conditions	Check for voltage to ground: There should be battery voltage.	• Blown No. 3 (7.5 A) fuse in the under-dash fuse/relay box • An open in the wire
3	F	Ignition switch ON (II)	Check for voltage to ground: There should be battery voltage.	• Blown No. 15 (10 A) fuse in the under-dash fuse/relay box • An open in the wire

Rear Window Defogger Timer System:

No.	Wire	Test condition	Test: Desired result	Possible cause if result is not obtained
1	YEL	Defogger switch pushed	Check for continuity to ground: There should be continuity as the switch is pushed.	• Faulty defogger switch • Poor ground (G201, G401) • An open in the wire
2	BLU/YEL	Ignition switch ON (II)	Connect to ground: The rear window defogger should work and the defogger switch indicator light should come on.	• Blown No. 13 (7.5 A) fuse in the under-dash fuse/relay box • Faulty defogger relay • Blown bulb • An open in the wire

Intermittent Wiper Relay System:

No.	Wire/ Terminal	Test condition	Test: Desired result	Possible cause if result is not obtained
1	YEL/BLU	Ignition switch ON (II) and windshield wiper switch INT	Check for voltage to ground: There should be battery voltage.	• Blown No. 14 (20 A) fuse in the under-dash fuse/relay box • Faulty windshield wiper switch • An open in the wire
2	BLU/WHT and BLU/GRN	Windshield wiper switch OFF or INT and wiper blades in park position	Check for continuity between the BLU/WHT and BLU/GRN terminals: There should be continuity.	• Faulty windshield wiper switch • Faulty windshield wiper motor • An open in the wire
3	*E	Ignition switch ON (II)	Check for voltage to ground: There should be battery voltage.	• An open in the wire
4	*BLK/GRN	Ignition switch ON (II) and windshield washer motor switch ON	Check for voltage to ground: There should be battery voltage.	• Faulty windshield washer switch • An open in the wire

*: With combined washer-wiper operation

(cont'd)

Input Test (cont'd)

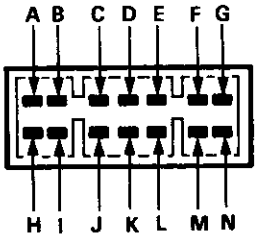

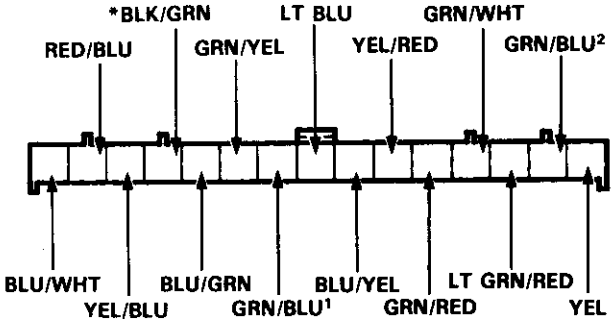

View from wire side

*With combined washer-wiper operation

Engine Oil Pressure Indicator Flasher System:

No.	Wire/ Terminal	Test condition	Test: Desired result	Possible cause if result is not obtained
1	A	Engine running	Check for voltage to ground: There should be battery voltage.	• Faulty charging system • An open in the wire
2	YEL/RED	Ignition switch OFF	Check for continuity to ground: There should be continuity.	• Faulty engine oil pressure switch • An open in the wire
		Ignition switch ON (II)	Check indicator light. If the light does not come on, attach the YEL/RED terminal to ground: The light should come on as the ignition switch is turned ON.	• Blown bulb • An open in the wire
		Start the engine.	Check for voltage to ground: There should be battery voltage.	• Insufficient oil • Improper lubrication • Faulty engine oil pressure switch

Key-in/Seat Belt Reminder System:

No.	Wire	Test condition	Test: Desired result	Possible cause if result is not obtained
1	GRN/BLU²	Driver's door open	Check for continuity to ground: There should be continuity.	• Faulty driver's door switch • An open in the wire
2	LT GRN/ RED	Front passenger's door switch open NOTE: Before testing, remove No. 3 (7.5 A) fuse from the under-dash fuse/relay box.	Check for continuity to ground: There should be continuity.	• Faulty front passenger's door switch • An open in the wire
3	LT BLU	Ignition key inserted into the ignition switch	Check for voltage to ground: There should be 1 V or less.	• Faulty ignition key switch • Poor ground (G201, G401) • An open in the wire
4	RED/BLU	Ignition switch ON (II) and driver's seat belt unbuckled	Check for voltage to ground: There should be 1 V or less.	• Faulty seat belt switch • Poor ground (G551) • An open in the wire

NOTE: Refer to page 23-125 for the seat belt switch test.

Bulb Check System (brake system light)

No.	Terminal	Test condition	Test: Desired result	Possible cause if result is not obtained
1	M	Ignition switch at START	Check for voltage to ground: There should be battery voltage.	• Blown No. 18 (7.5 A) fuse in the under-dash fuse/relay box • Faulty clutch interlock switch or starter cut relay (M/T) • Faulty neutral position switch (A/T) • An open in the wire
2	D	Ignition switch ON (II), brake fluid reservoir full, and parking brake lever down	Connect to ground: Brake system light should come on.	• Blown brake system light • An open in the wire

Lights-on Reminder System:

No.	Wire/ Terminal	Test condition	Test: Desired result	Possible cause if result is not obtained
1	GRN/BLU[2]	Driver's door open	Check for continuity to ground: There should be continuity.	• Faulty driver's door switch • An open in the wire
2	H	Combination light switch ON.	Check for voltage to ground: There should be battery voltage.	• Blown No. 19 (10 A) fuse in the under-dash fuse/relay box • Faulty combination light switch • An open in the wire
3	J	Connect the I terminal to the J terminal.	Check chime operation: Chime should activate each time the battery is connected.	• Faulty chime • An open in the wire

Side Marker Light Flasher System:

No.	Wire/ Terminal	Test condition	Test: Desired result	Possible cause if result is not obtained
1	H	Combination light switch ON	Check for voltage to ground: There should be battery voltage.	• Blown No. 19 (10 A) fuse in the under-dash fuse/relay box • An open in the wire
2	GRN/BLU[1]	Ignition switch ON (II) and turn signal switch to "Left"	Check for voltage to ground: It should change from 0—12—0 V repeatedly.	• Blown No. 26 (10 A) fuse in the under-dash fuse/relay box • Faulty turn signal/hazard relay • An open in the wire
3	GRN/YEL	Ignition switch ON (II) and turn signal switch to "Right"		
4	GRN/WHT	Ignition switch ON (II) and turn signal switch to "Left (or Right)": Connect the H terminal to the GRN/WHT (or GRN/RED[1]) terminal.	Check the front side marker light: Left (or Right) front side marker light should come on as the battery is connected.	• Blown bulb • Poor ground (G201, G301, G401) • An open in the wire
5	GRN/RED[1]			

Key-in Reminder System

Ignition Key Switch Test

NOTE: Refer to page 23-145 for a diagram of the key-in reminder circuit, and to page 23-148 for the input test of the beeper circuit.

When the ignition key is not removed, the key-in reminder in the integrated control unit senses ground through the closed ignition key switch. When you open the driver's door, the beeper circuit senses ground through the closed door switch. With ground at the "LT BLU" and "GRN/BLU" terminals, the beeper sounds.

1. Remove the dashboard lower cover and knee bolster (see page 23-70).
2. Disconnect the 7-P connector from the main wire harness.

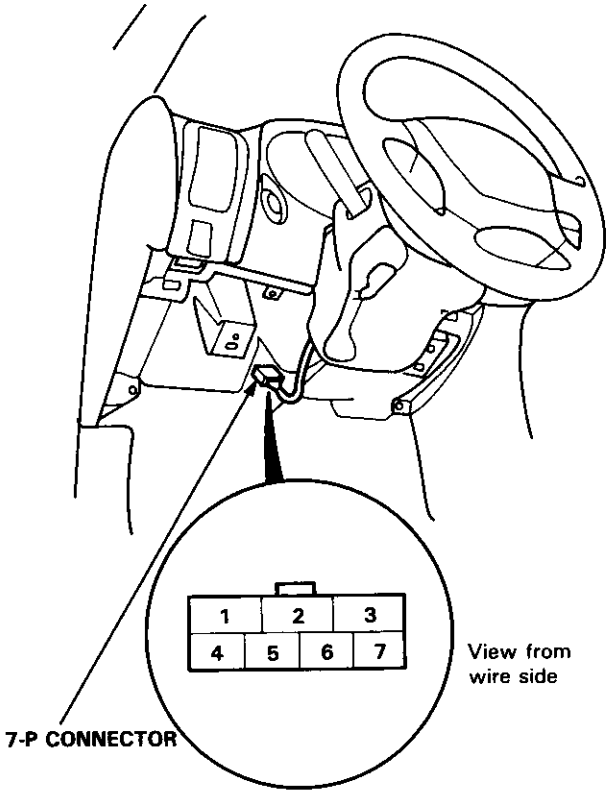

3. Check for continuity between the No. 2 and No. 4 terminals in each condition according to the table.

Terminal / Condition	2	4
KEY INSERTED	○	○
KEY REMOVED		

Door Switch Test

1. Open the door.
2. Remove the screw, then pull out the door switch.
3. Disconnect the 1-P connector from the switch.

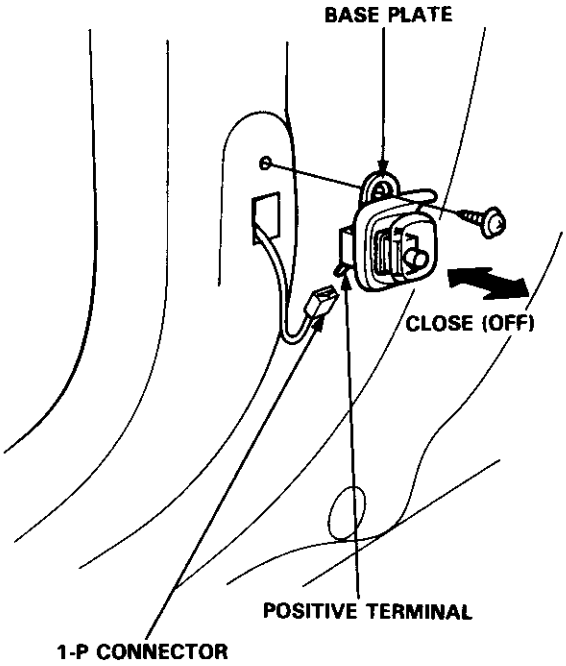

4. Check for continuity between the positive terminal and the base plate (ground) in each switch position according to the table.

Terminal / Position	POSITIVE	BASE PLATE
PUSHED (door closed)		
RELEASED (door open)	○	○

Engine Oil Pressure Indicator System

Description

NOTE: Refer to page 23-144 for the circuit diagram of the engine oil pressure indicator flasher, and to page 23-148 for the input test of the flasher circuit.

The low engine oil pressure indicator light works in two ways. It will flash continuously following a momentary loss of oil pressure, or it will go on and stay on with a complete loss of oil pressure.

When the engine first starts, before oil pressure rises above 29.4 kPa (0.3 kgf/cm², 4.3 psi), current flows through the low engine oil pressure indicator light and the oil pressure switch to ground. This tests the circuit.

With the engine running, voltage is applied to the flasher circuit of the integrated control unit. With normal oil pressure, the oil pressure switch is open and the low engine oil pressure indicator light does not operate. If the oil pressure switch closes momentarily (more than 0.5 seconds), but then opens again, terminal "YEL/RED" will sense ground through the switch. The integrated control unit will then provide and remove ground for the low engine oil pressure indicator light through terminal "YEL/RED". The light will flash on and off until the ignition switch is turned to "OFF".

If engine oil pressure falls below 29.4 kPa (0.3 kgf/cm², 4.3 psi) and does not increase, the oil pressure switch will stay closed. The low engine oil pressure indicator light will go on and stay on.

NOTE: Refer to page 23-122 for the engine oil pressure switch test.

Lights-on Reminder System

Description

NOTE: Refer to page 23-145 for a diagram of the lights-on reminder circuit, and to page 23-149 for the input tests of the circuit.

When the ignition key is turned to OFF and removed, with the lights on, voltage is applied to the reminder circuit in the integrated control unit. When you open the driver's door, the circuit senses ground through the closed door switch.
With voltage at the "H" terminal, ground at the "GRN/BLU²" terminal and no voltage at the "F" terminal, the chime sounds to remind the driver to turn off the lights.

Chime Test

1. Remove the dashboard lower cover and knee bolster (see page 23-70).
2. Disconnect the 2-P connector from the dashboard wire harness.

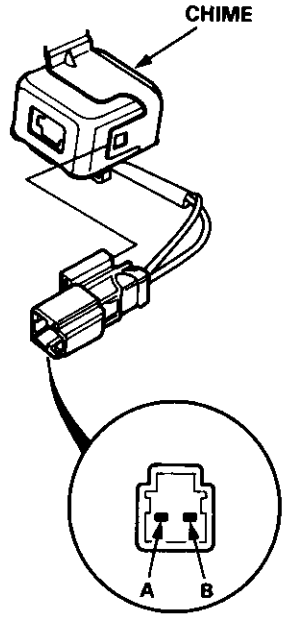

3. Test the chime by connecting battery power to the "A" terminal and ground to the "B" terminal, and cycling the power on-off repeatedly.
4. If the chime fails to sound every time power is cycled, replace it.

Component Locations Index

CAUTION:
- **All SRS electrical wiring harnesses are covered with yellow insulation.**
- **Before disconnecting any part of the SRS wire harness, connect the short connector(s).**
- **Replace the entire affected SRS harness assembly if it has an open circuit or damaged wiring.**

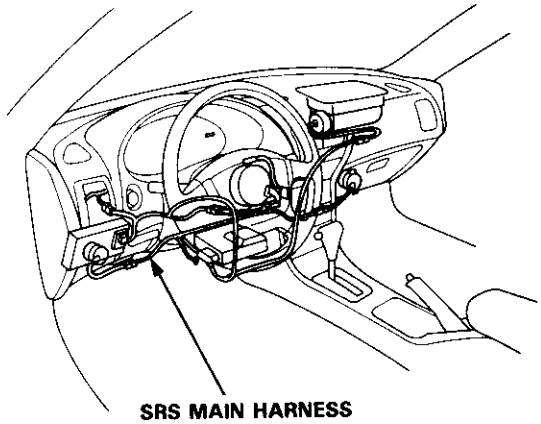

SRS MAIN HARNESS
(Covered with yellow insulation)

HIGH BEAM INDICATOR LIGHT
(In the gauge assembly)
Bulb Locations, page 23-115

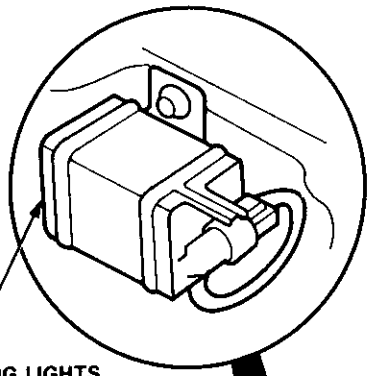

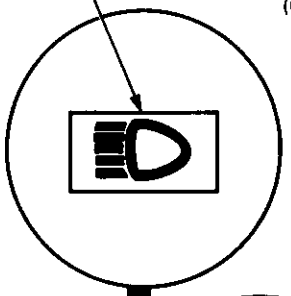

COMBINATION LIGHT SWITCH
Replacement, page 23-160
Test, page 23-158

DAYTIME RUNNING LIGHTS RESISTOR (Canada)
Test, page 23-160

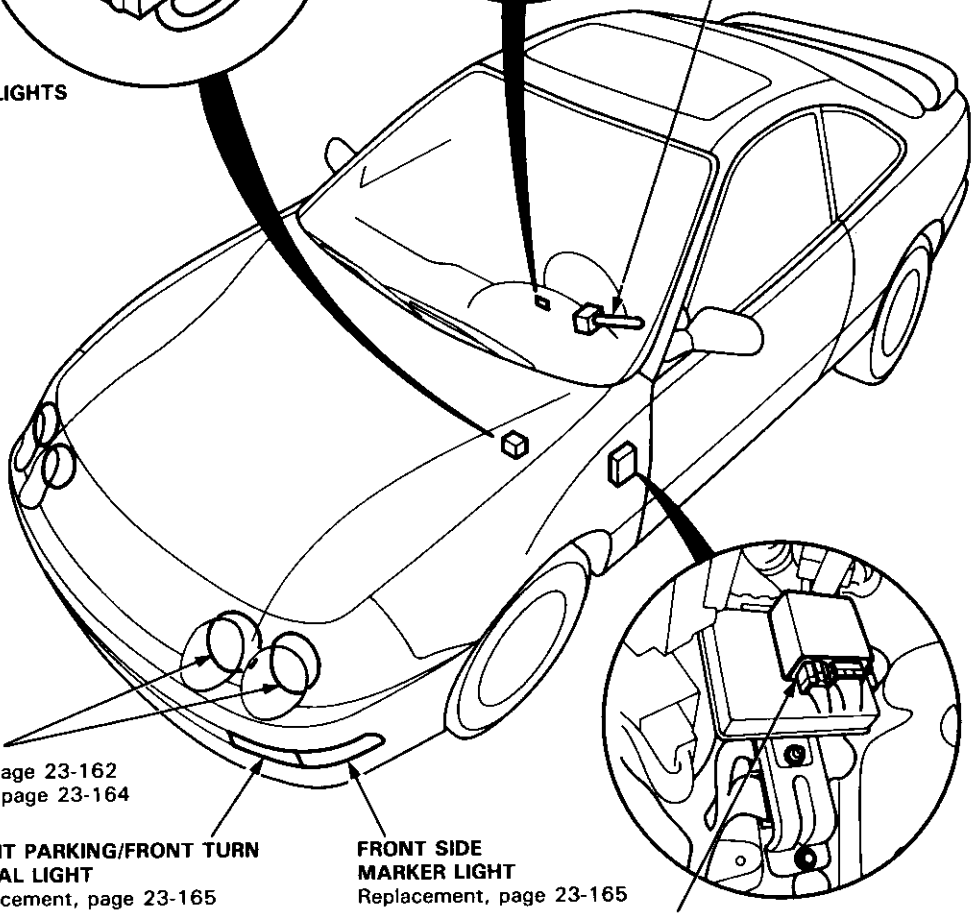

HEADLIGHTS
Adjustment, page 23-162
Replacement, page 23-164

FRONT PARKING/FRONT TURN SIGNAL LIGHT
Replacement, page 23-165

FRONT SIDE MARKER LIGHT
Replacement, page 23-165

DAYTIME RUNNING LIGHTS CONTROL UNIT (Canada)
Input Test, page 23-156

Hatchback:

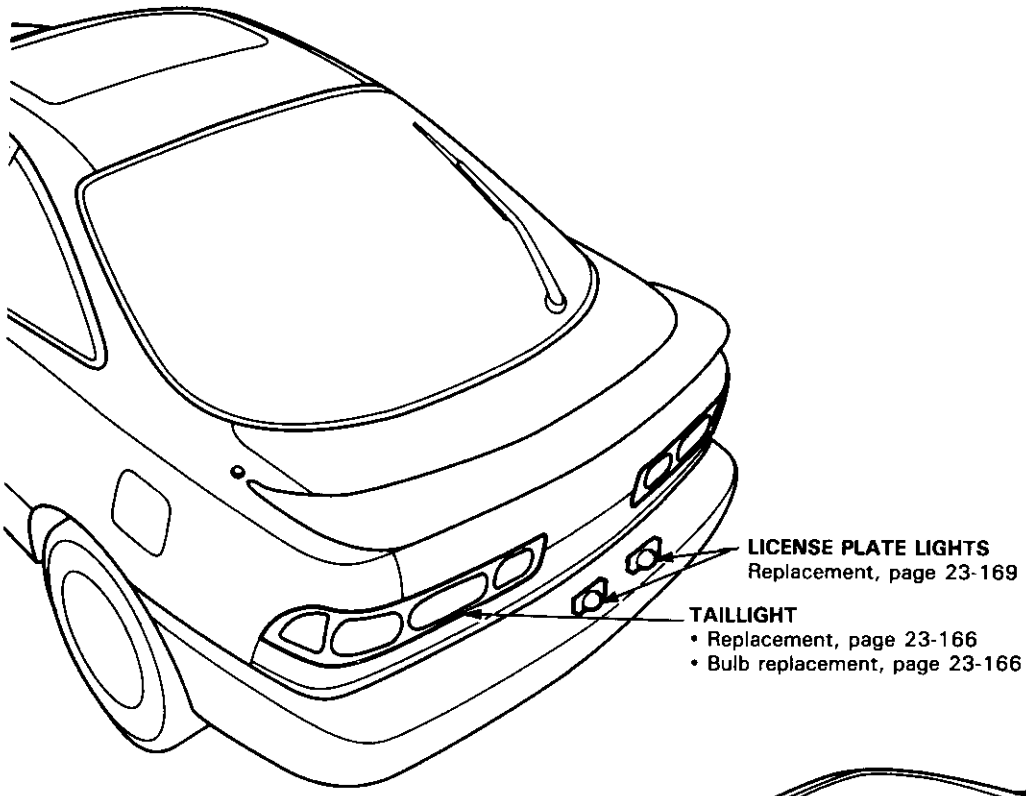

Sedan:

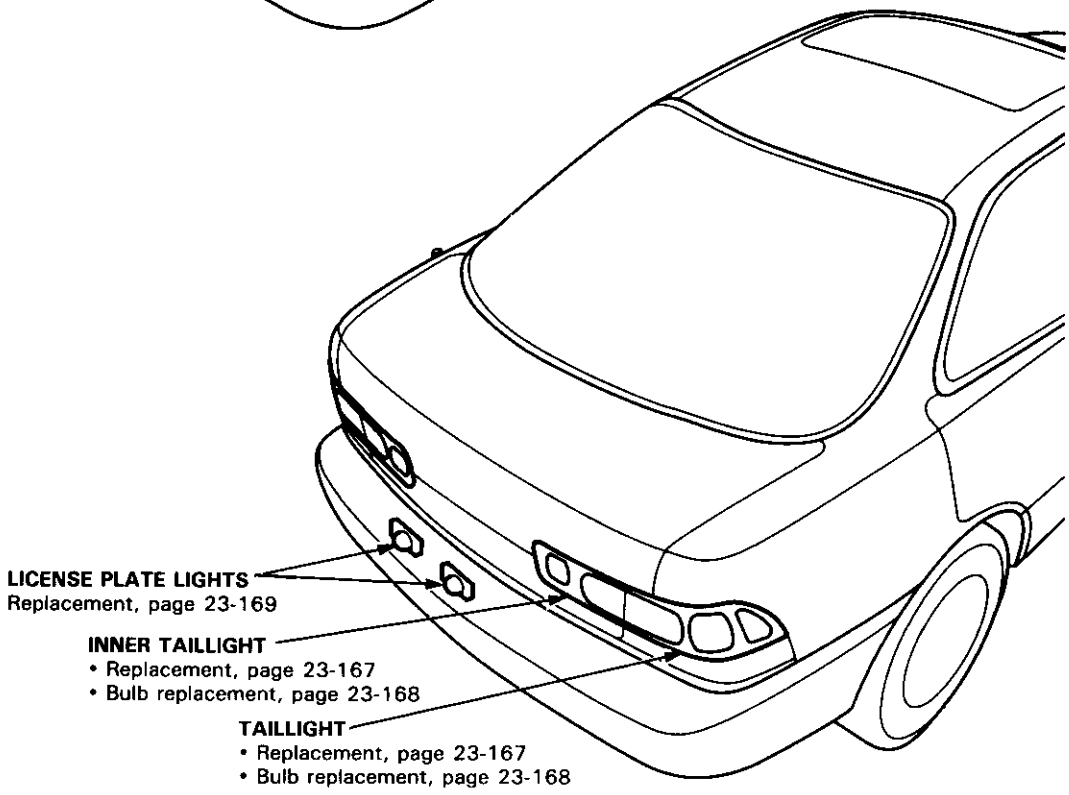

Circuit Diagram (USA)

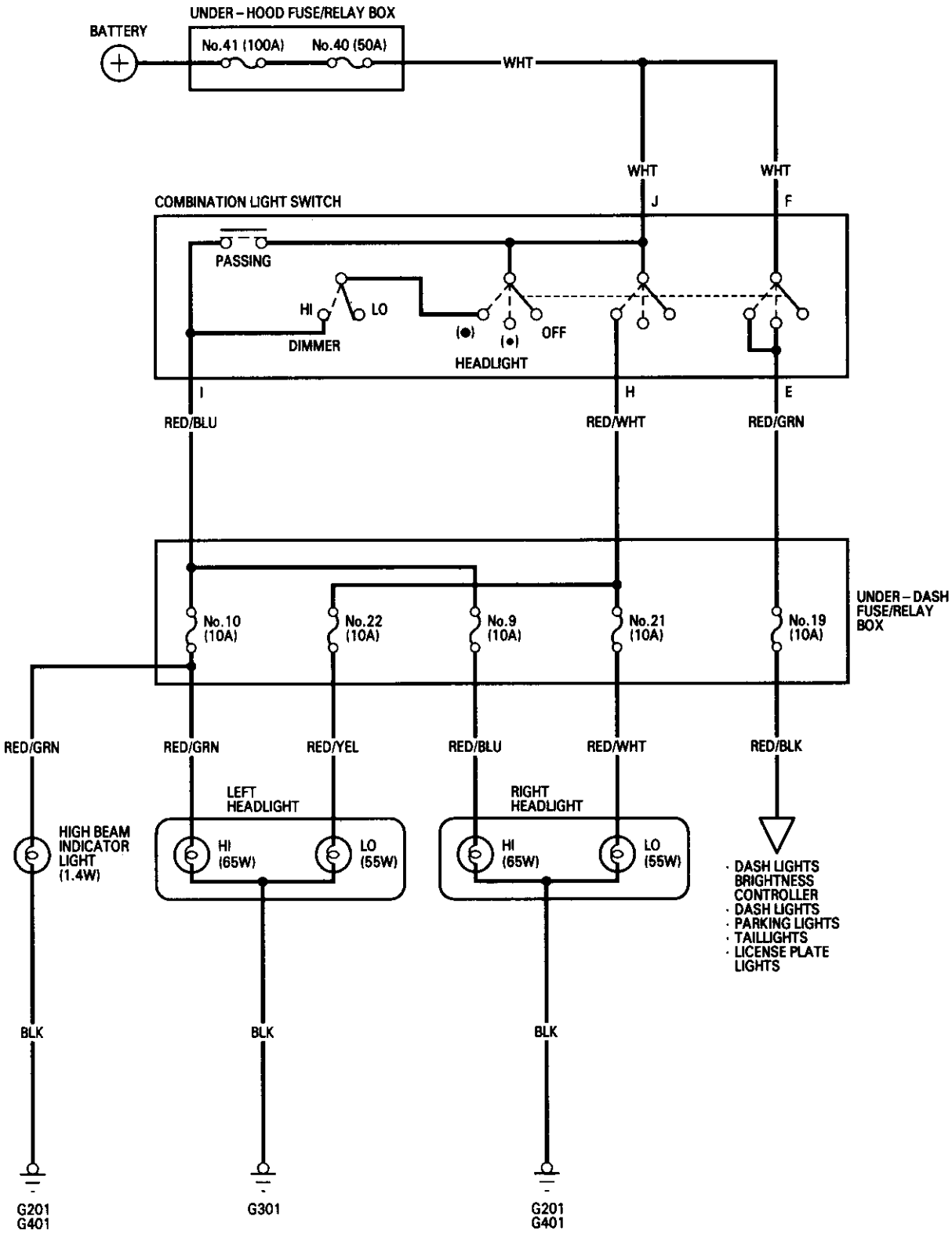

Circuit Diagram (Canada)

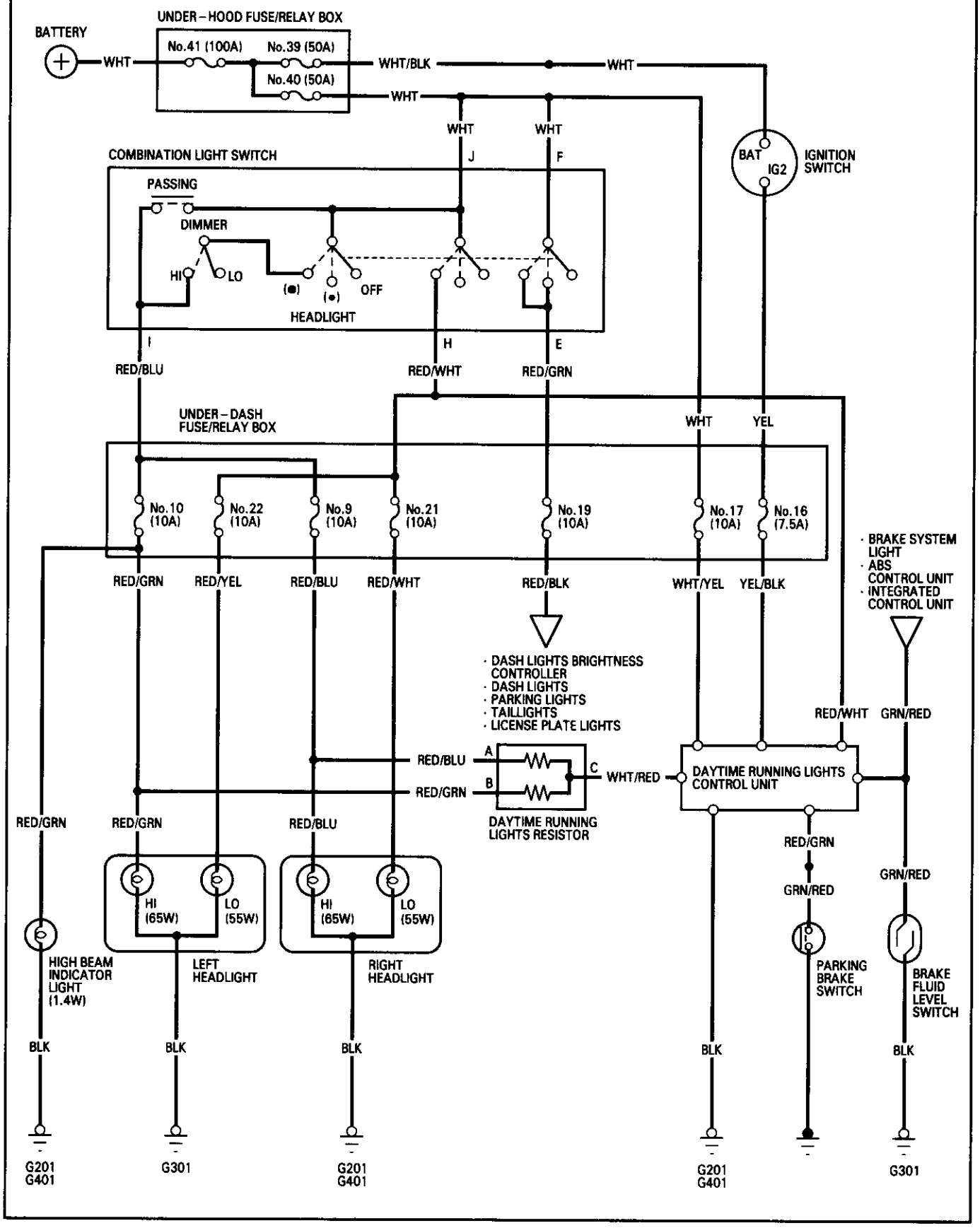

Daytime Running Lights Control Unit Input Test (Canada)

CAUTION:
- **All SRS electrical wiring harnesses are covered with yellow insulation.**
- **Before disconnecting any part of the SRS wire harness, connect the short connector(s).**
- **Replace the entire affected SRS harness assembly if it has an open circuit or damaged wiring.**

1. Remove the dashboard lower cover and knee bolster.
2. Disconnect the connectors from the daytime running lights control unit.
3. Inspect the connector and socket terminals to be sure they are all making good contact.
   - If the terminals are bent, loose or corroded, repair them as necessary, and recheck the system.
   - If the terminals look OK, make the following input tests at the connector.
     - If any test indicates a problem, find and correct the cause, then recheck the system.
     - If all the input tests prove OK, the control unit must be faulty; replace it.

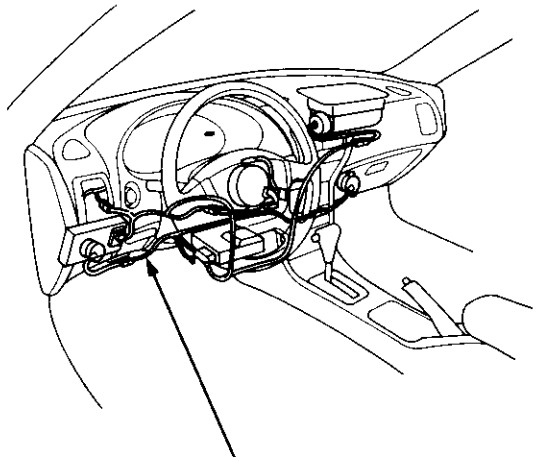

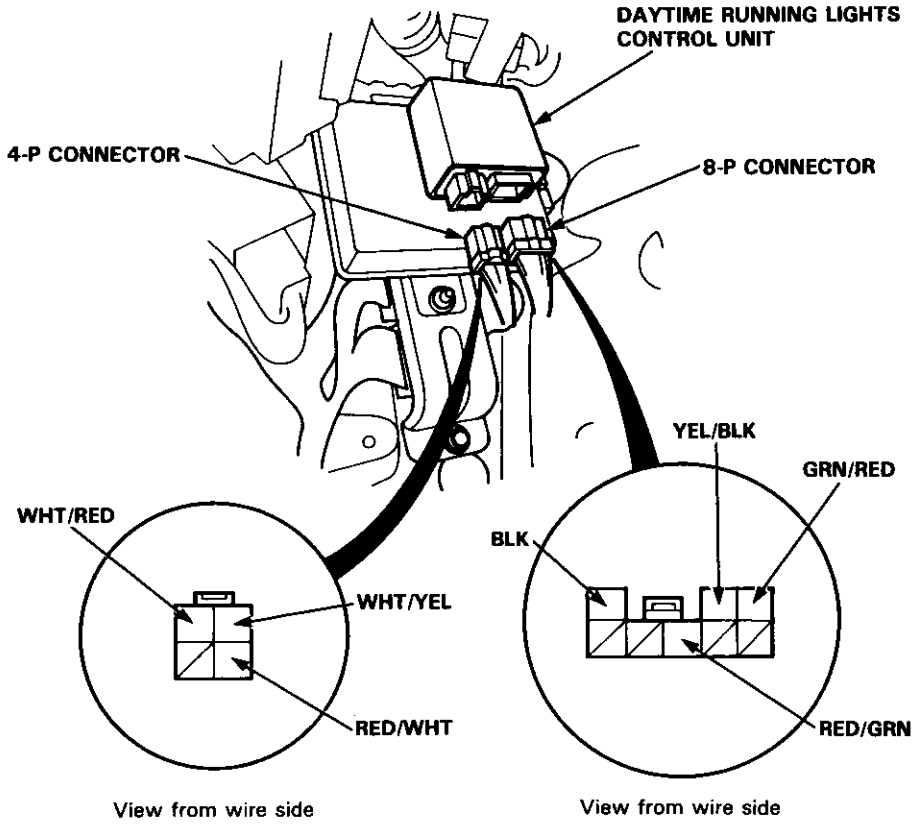

No.	Wire	Test condition	Test: Desired result	Possible cause if result is not obtained
1	BLK	Under all conditions	Check for continuity to ground: There should be continuity.	• Poor ground (G201, G401) • An open in the wire
2	WHT/YEL	Under all conditions	Check for voltage to ground: There should be battery voltage.	• Blown No. 17 (10 A) fuse in the under-dash fuse/relay box • An open in the wire
3	YEL/BLK	Ignition switch ON (II)	Check for voltage to ground: There should be battery voltage.	• Blown No. 16 (7.5 A) fuse in the under-dash fuse/relay box • Faulty ignition switch • An open in the wire
4	RED/WHT	Combination light switch in "●" position	Check for voltage to ground: There should be battery voltage.	• Blown No. 40 (50 A) fuse in the under-hood fuse/relay box • Faulty combination light switch • An open in the wire
5	WHT/RED	Combination light switch is OFF; connect a jumper wire between the YEL/BLK and WHT/RED terminals, then turn the ignition switch ON.	Left and right headlight (high beam) should be on but dim, and high beam indicator light should come on.	• Poor ground (G201, G401, G301) • Blown bulbs • Faulty daytime running lights resistor • An open in the wire
6	GRN/RED	Ignition switch ON (II), brake fluid reservoir full, and parking brake lever down	Connect to ground: The brake system light should come on.	• Blown No. 15 (10 A) fuse in the under-hood fuse/relay box • Blown brake system light • An open in the wire
7	RED/GRN	Parking brake lever up	Check for continuity to ground: There should be continuity.	• Faulty brake lever switch • An open in the wire

Combination Light/Turn Signal Switch Test

CAUTION:
- **All SRS electrical wiring harnesses are covered with yellow insulation.**
- **Before disconnecting any part of the SRS wire harness, connect the short connector(s).**
- **Replace the entire affected SRS harness assembly if it has an open circuit or damaged wiring.**

1. Remove the dashboard lower cover and steering column covers (see page 23-71).

2. Disconnect the 4-P and 7-P connectors from the switch.

3. Check the connector and socket terminals to be sure they are all making good contact. If the terminals are bent, loose, or corroded, repair them as necessary, and recheck the system.

4. Check for continuity between the terminals in each switch position according to the table.

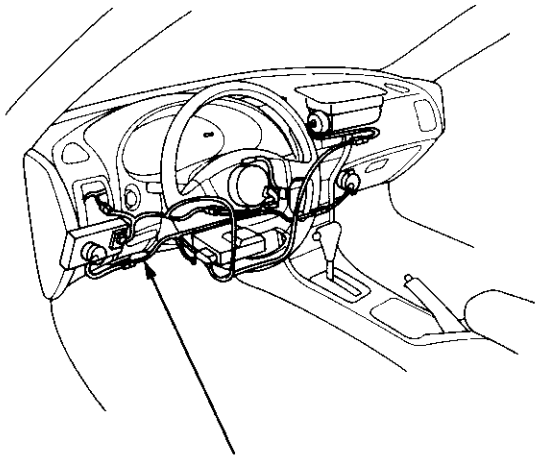

SRS MAIN HARNESS
(Covered with yellow insulation)

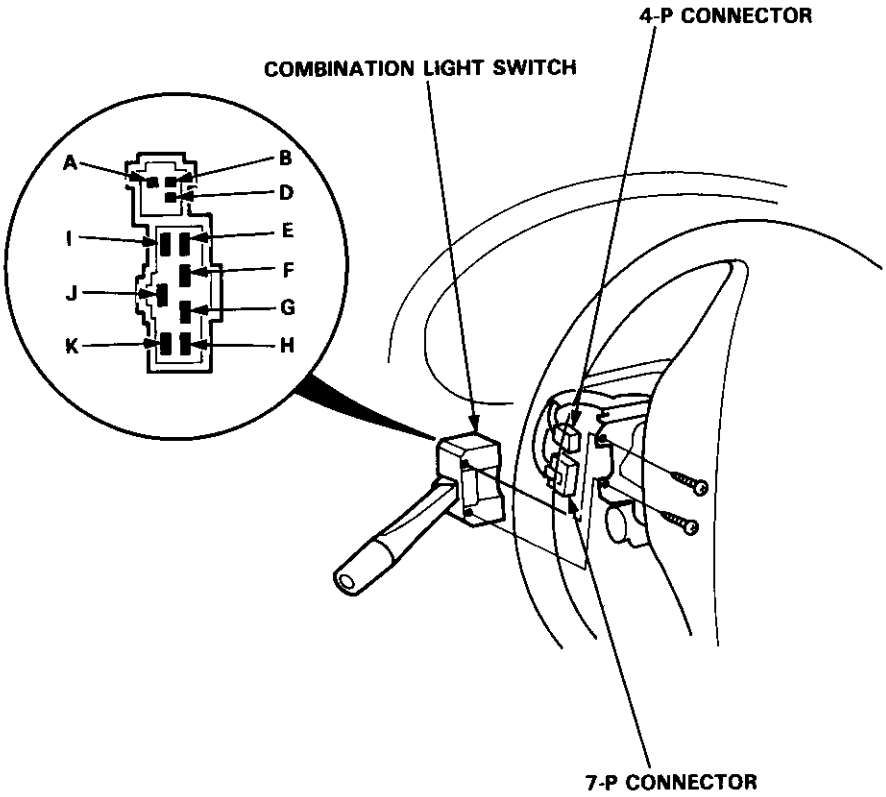

Combination Light Switch :

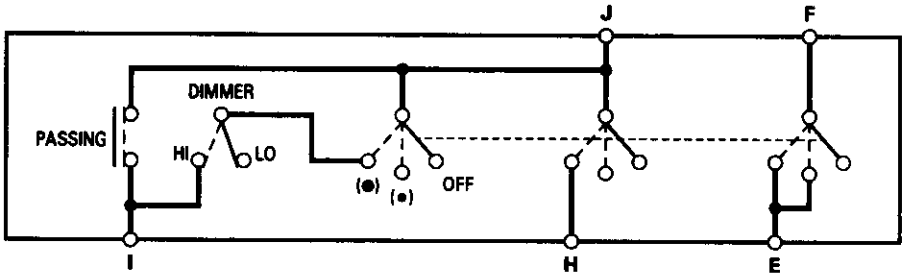

Position \ Terminal			E	F	H	I	J
Headlight switch	OFF						
	•		○—○				
	●	LOW	○—○		○—	——	—○
		HIGH	○—○		○—	—○—	—○
Passing switch	OFF						
	ON					○—	—○

Turn Signal Switch :

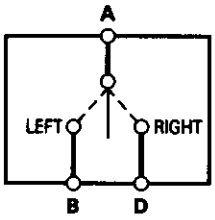

Position \ Terminal	A	B	D
RIGHT	○—	——	—○
NEUTRAL			
LEFT	○—	—○	

Combination Light Switch Replacement

1. Remove the steering column covers.

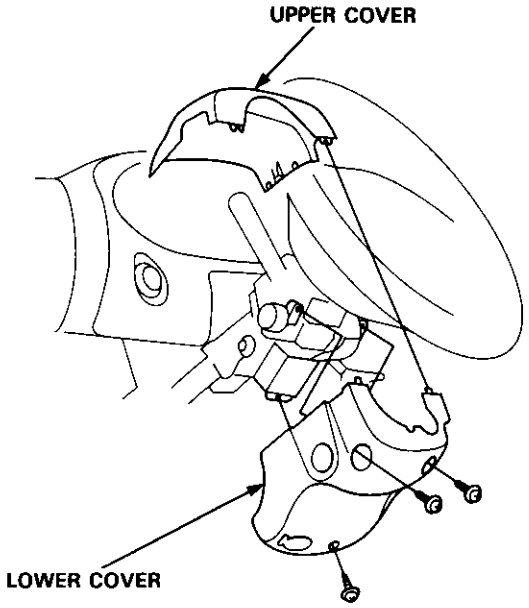

2. Disconnect the 4-P and 7-P connectors from the combination light switch, then remove the two screws and lift out the switch.

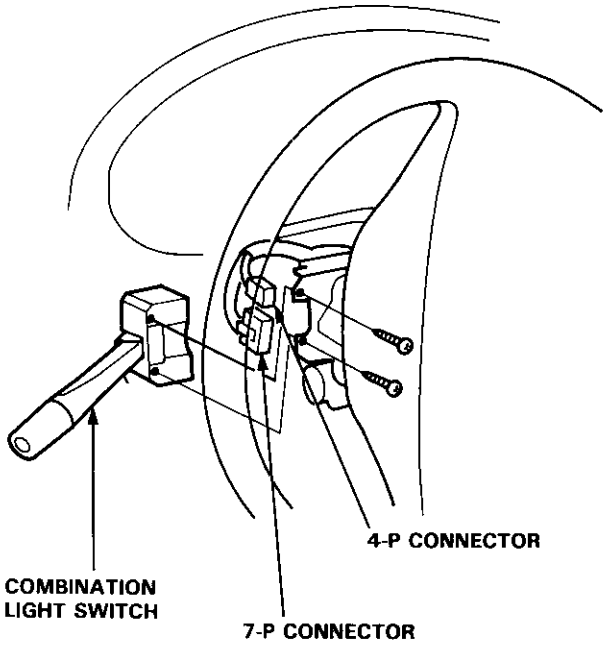

Daytime Running Lights Resistor Test (Canada)

CAUTION: The daytime running lights resistor becomes very hot when the daytime running lights are on; do not touch it or the attaching hardware immediately after the lights have been turned off.

1. Disconnect the 3-P connector from the resistor.

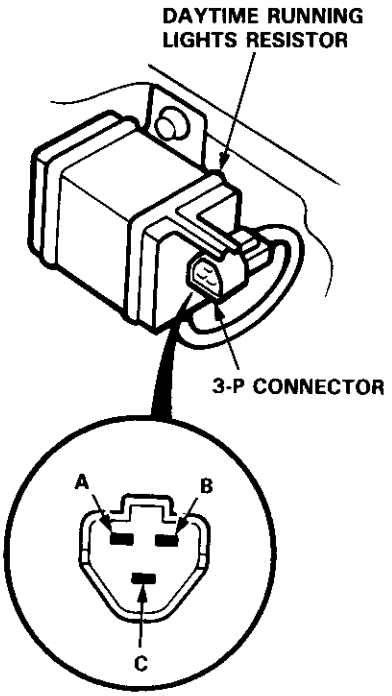

View from terminal side

2. Measure the resistance between the resistor terminals (A and B) and the power terminal C.

   Resistance: 1.4 Ω ± 0.07 Ω

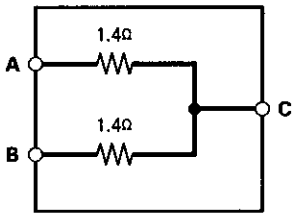

3. Replace the resistor with a new one if any of the resistances are beyond specification.

Headlight

Description

The low beam lights are projector-type lights which are more compact while maintaining sufficient brightness. Bundling the light rays reduces stray light and yields a spotlight-effect which improves visibility during night or foul weather driving. For easier aiming, the headlights are equipped with vertical and horizontal gauges.

NOTE: As the outer lenses are made of a resin material, don't cover the headlights when they are turned on.

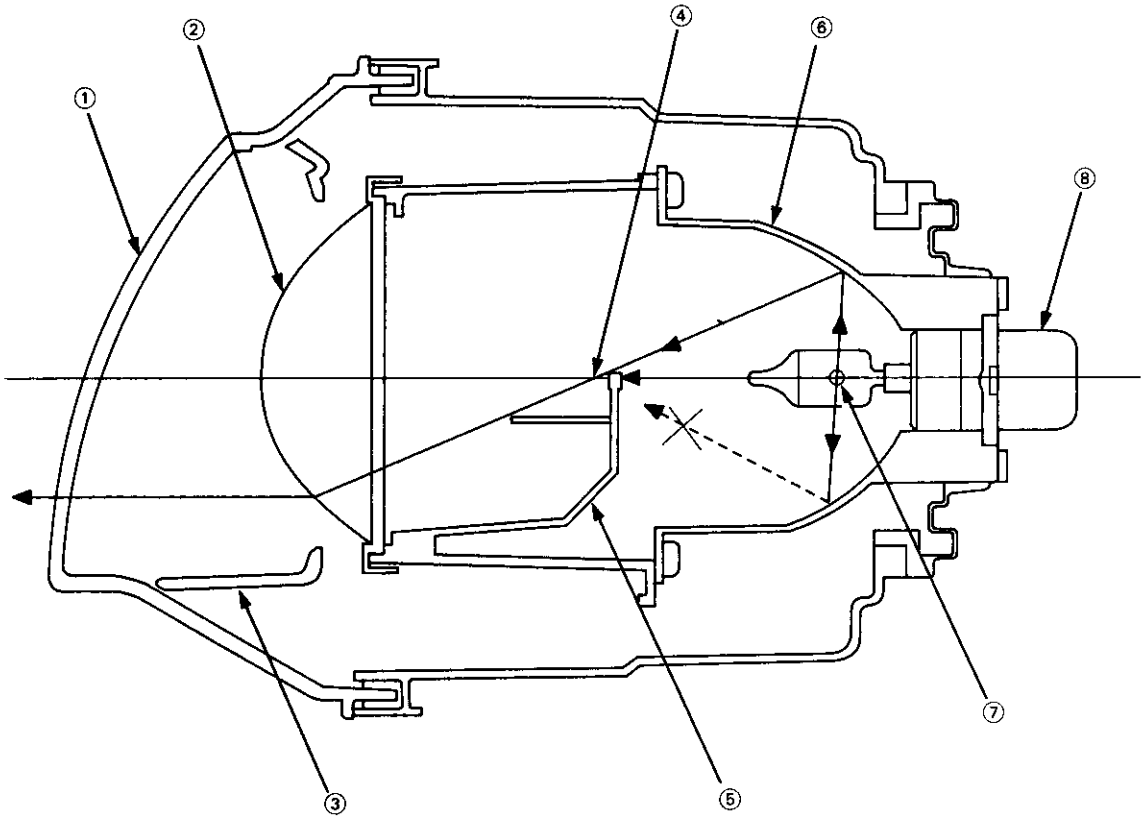

① OUTER LENS
② CONVEX LENS
③ SUB-REFLECTOR
④ SECOND FOCUS
⑤ INTERRUPTER PLATE
⑥ REFLECTOR
⑦ FIRST FOCUS
⑧ BULB

Adjustment

Before adjusting the headlights:

- Park the car on level ground.
- Make sure the fuel tank is full.
- The driver or someone who weighs the same should sit in the driver's seat.
- Load the trunk with the items you usually carry (if you usually pull a trailer, attach it to the car).
- Push down on the front and rear bumpers several times to make sure the car is sitting normally.
- When installing a new headlight assembly, tighten the four mounting bolts so that the indicator in the vertical gauge comes to the "0" mark.

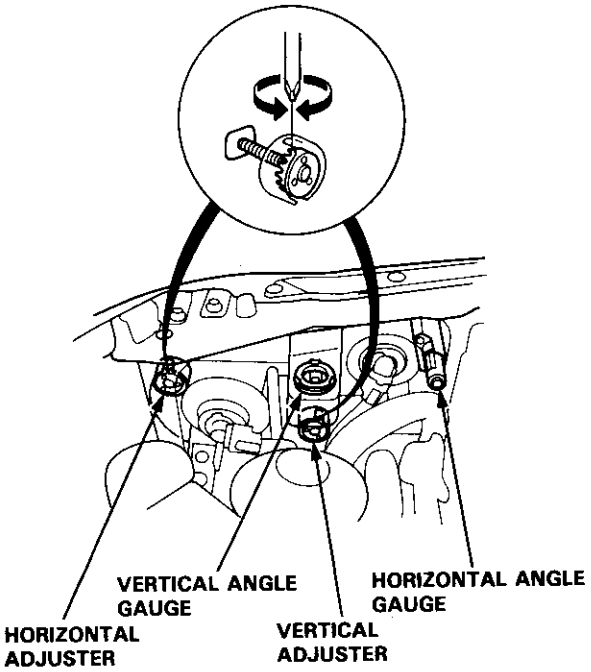

1. Open the hood.
2. Check that both the horizontal and vertical gauge read "0".
   - If the gauges read "0", check headlight aiming with the aiming charts on page 23-163. (If aiming isn't correct, refer to the frame repair chart in section 20.)
   - If one or both gauges don't read "0", go to step 3.
3. Turn the low beams on. If necessary, align the vertical indicator with its "0" mark by turning the vertical adjuster with a Phillips screwdriver, and check aiming with the chart on page 23-163.

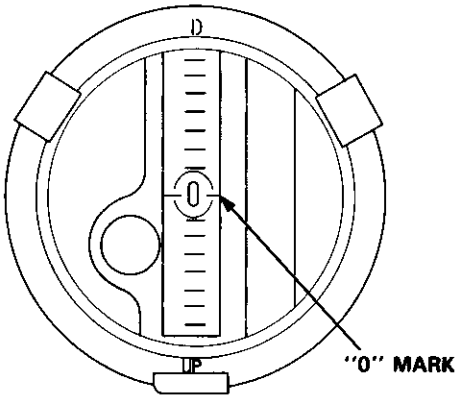

4. If necessary, align the horizontal indicator with its "0" mark by turning the horizontal adjuster with a Phillips screwdriver, and check aiming with the chart on page 23-163.

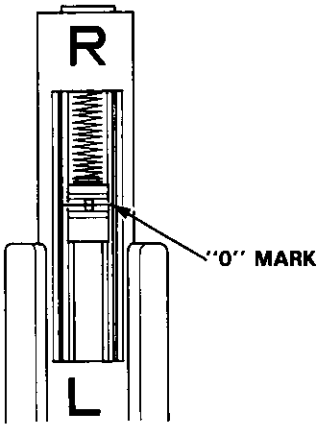

5. Recheck that the vertical indicator bubble is aligned with "0" ± 1.
   If necessary, adjust as described in step 3.
6. Turn the high beams on and check aiming with the charts on page 23-163.

Measurements (Standard):
A: 9 ft 10 in (3000 mm)
B: 23 in (585 mm)
C: 46.1 in (1170 mm)
D: 33.5 in (850 mm)
E: 1.2 in (31 mm)

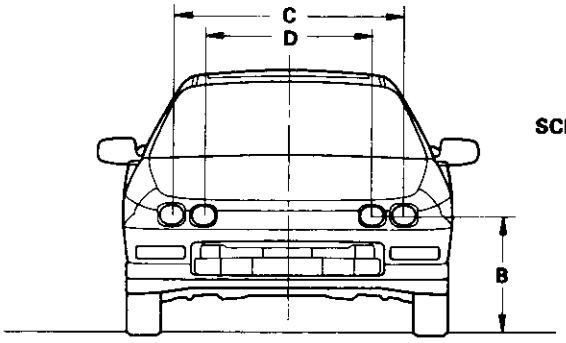

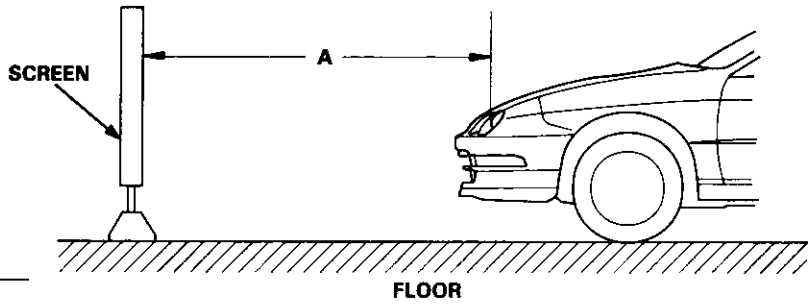

Headlight Aiming

Low beam:

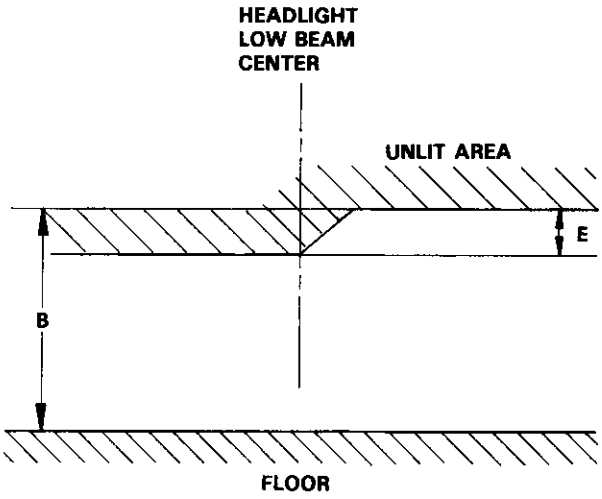

High beam:

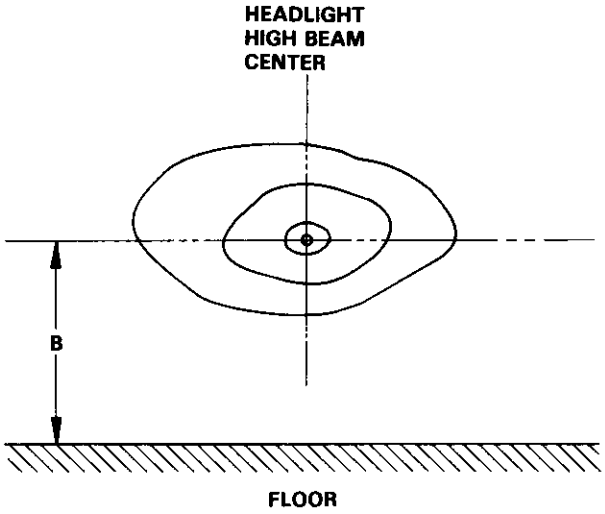

CAUTION: The outer lenses get very hot when the headlights are on; do not cover them.

Headlight

Headlight Replacement

1. Remove the front bumper.

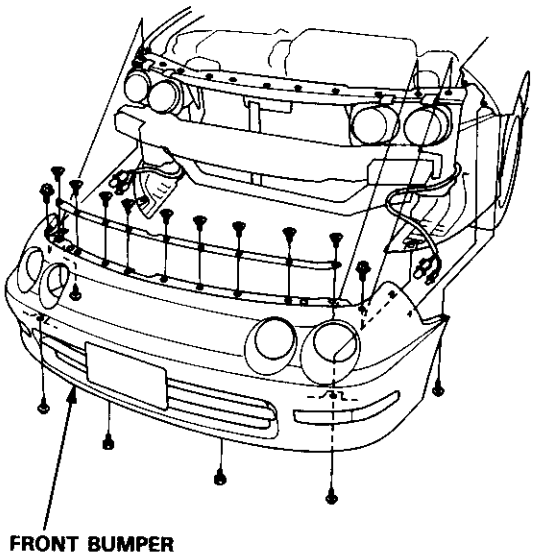

2. Remove the mounting bolts, then pull out the headlight, and disconnect the connectors from it.

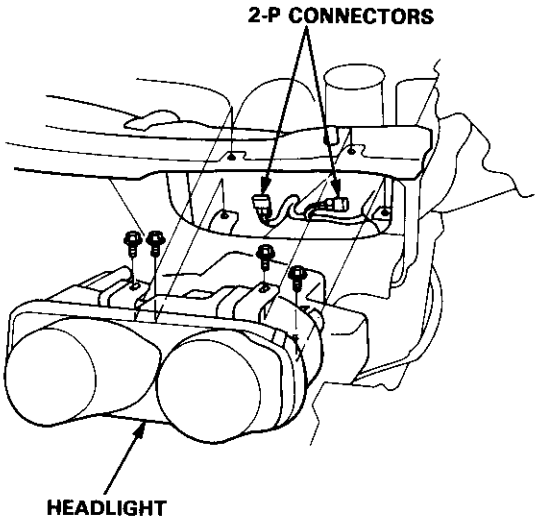

3. After replacement, the horizontal and vertical aiming must be checked using conventional methods. Use the aiming charts on page 23-163.

Bulb Replacement

CAUTION:

- **Halogen headlights can become very hot in use; do not touch them or the attaching hardware immediately after they have been turned off.**
- **Do not try to replace or clean the headlights with the lights on.**

1. Disconnect the 2-P connector(s) from the headlight.

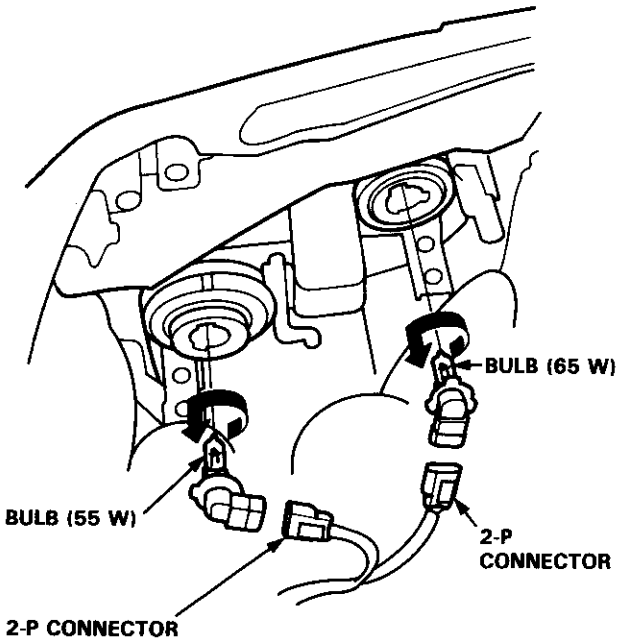

2. Turn the bulb(s) counterclockwise and remove the bulb(s).

Front Parking/Front Turn Signal Lights

Replacement

1. Remove the screw, and pull the front parking/front turn signal lights out of the front bumper.

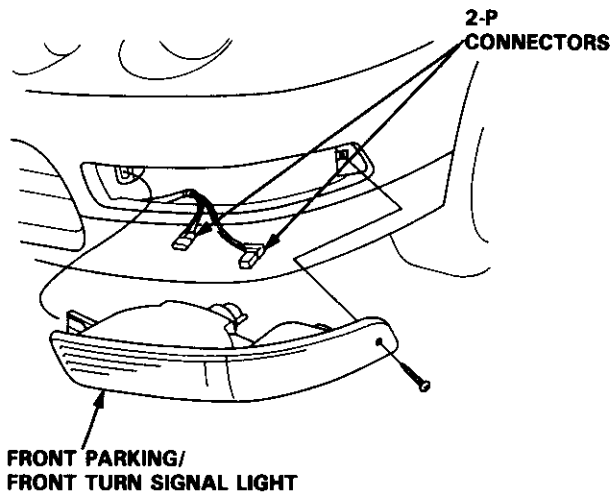

2. Disconnect the 2-P connector from the light.
3. Turn the bulb socket 45° counterclockwise to remove it from the housing.

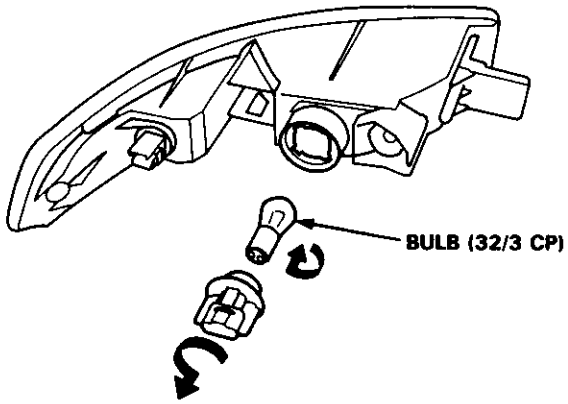

Front Side Marker Lights

Replacement

1. Remove the screw, and pull the front side marker light assembly out of the front bumper.
2. Disconnect the 2-P connector from the light.
3. Turn the bulb socket 45° counterclockwise to remove it from the housing.

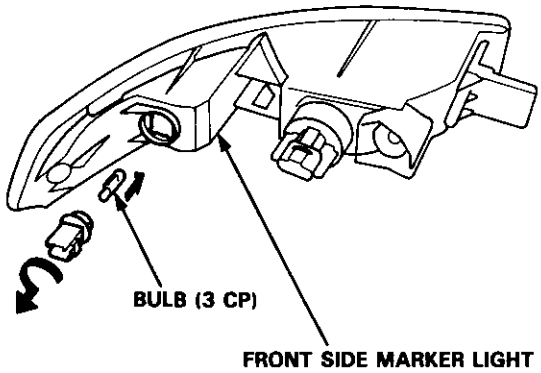

Taillights (Hatchback)

Replacement

1. Open the rear hatch.
2. Remove the rear panel lining and the side lining (see section 20).
3. Disconnect the 4-P connector from the taillight.
4. Remove the six mounting nuts, then pull out the taillight.

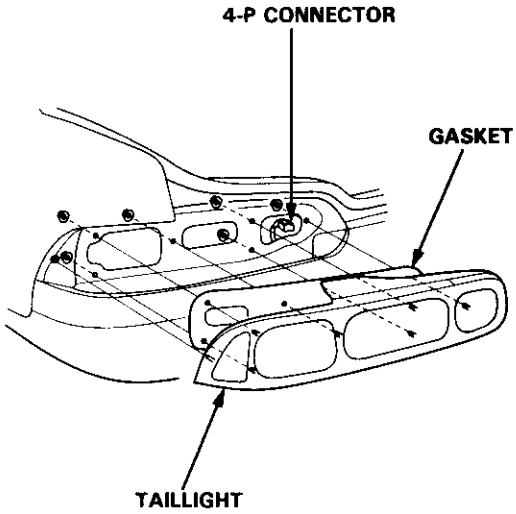

NOTE:
- Inspect the gasket. Replace it if it is distorted or stays compressed.
- After installation, run water over the lights to make sure they don't leak.

Bulb Replacement

Rear turn signal/Rear parking lights:

1. Open the rear hatch, then remove the access panel.
2. Remove the bulb from the bulb socket.

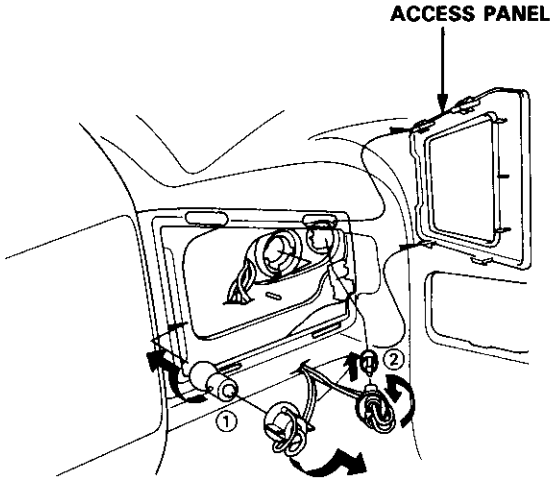

①: REAR TURN SIGNAL LIGHT BULB (32 CP)

②: REAR PARKING LIGHT BULB (3 CP)

Brake/Taillight/Back-up lights:

1. Open the rear hatch.
2. Remove the rear panel lining (see section 20).

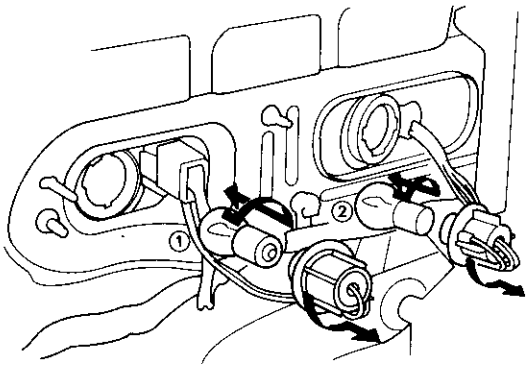

①: BACK-UP LIGHT BULB (32 CP)

②: BRAKE/TAILLIGHT BULB (32/3 CP)

Taillights (Sedan)

Replacement

Taillight:

1. Open the trunk lid, then remove the rear panel lining and side lining (see section 20).
2. Disconnect the 4-P connector from the taillight.
3. Remove the four mounting nuts, then pull out the taillight.

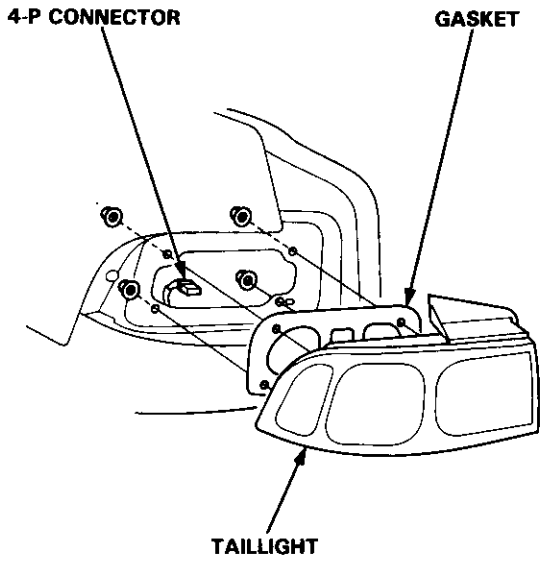

Inner Taillight:

1. Open the trunk lid.
2. Disconnect the 4-P connector from the inner taillight.
3. Remove the four mounting nuts, then pull out the inner taillight.

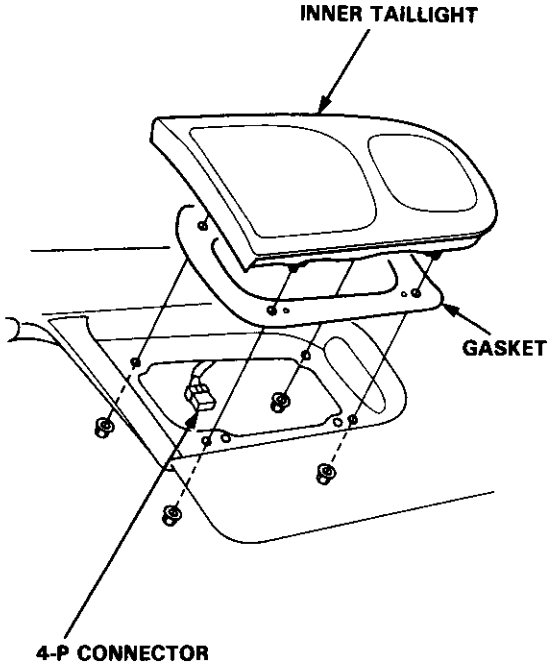

NOTE:

- Inspect the gasket. Replace it if it is distorted or stays compressed.
- After installation, run water over the lights to make sure they don't leak.

Taillights (Sedan)

Bulb Replacement

Taillight:

1. Open the trunk lid, then remove the rear panel lining and side lining (see section 20).
2. Remove the bulb from the bulb socket.

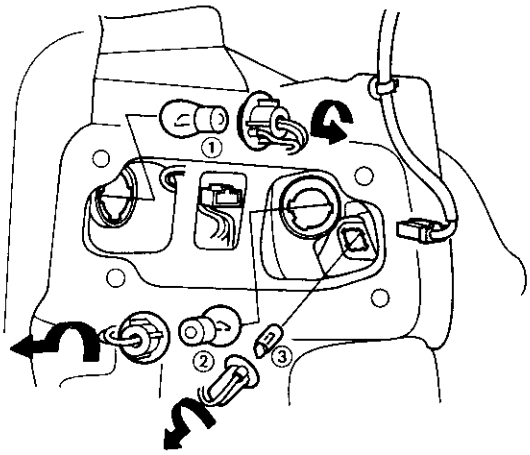

①: BRAKE/TAILLIGHT BULB (32/3 CP)

②: TURN SIGNAL LIGHT BULB (32 CP)

③: REAR PARKING LIGHT BULB (3 CP)

Inner Taillight:

1. Open the trunk lid, then remove the bulb housing.
2. Remove the bulb from the bulb housing.

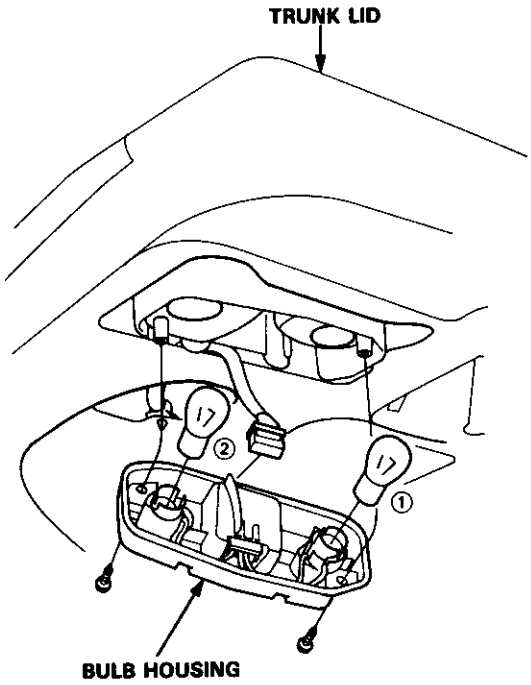

①: BACK-UP LIGHT BULB (32 CP)

②: BRAKE/TAILLIGHT BULB (32/3 CP)

License Plate Lights

Replacement

1. Remove the screws and pull out the license plate lights.
2. Turn the bulb socket 45° counterclockwise to remove it from the housing.

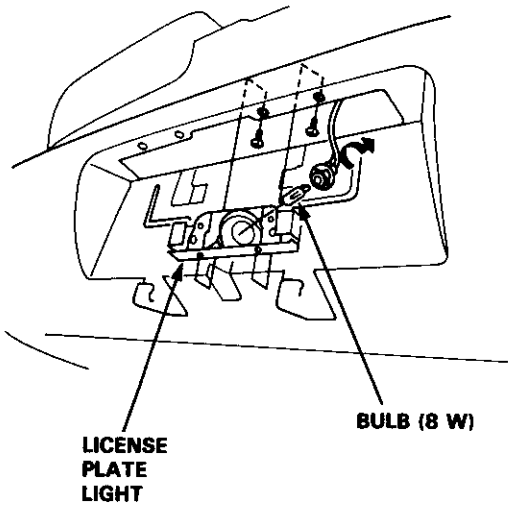

Glove Box Light

Test

1. Remove the glove box and disconnect the 2-P connector.
2. Check for continuity between the A and B terminals in each condition according to the table.

Condition \ Terminal	A		B
PUSHED (lid closed)			
RELEASED (lid open)	○	⊖	○

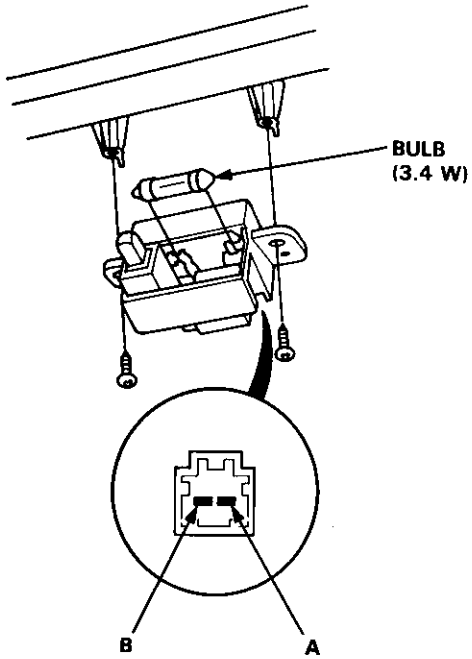

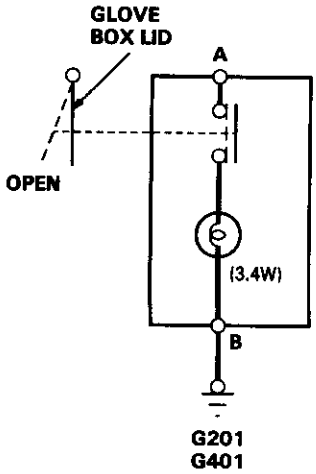

Dash Lights Brightness Control

Circuit Diagram

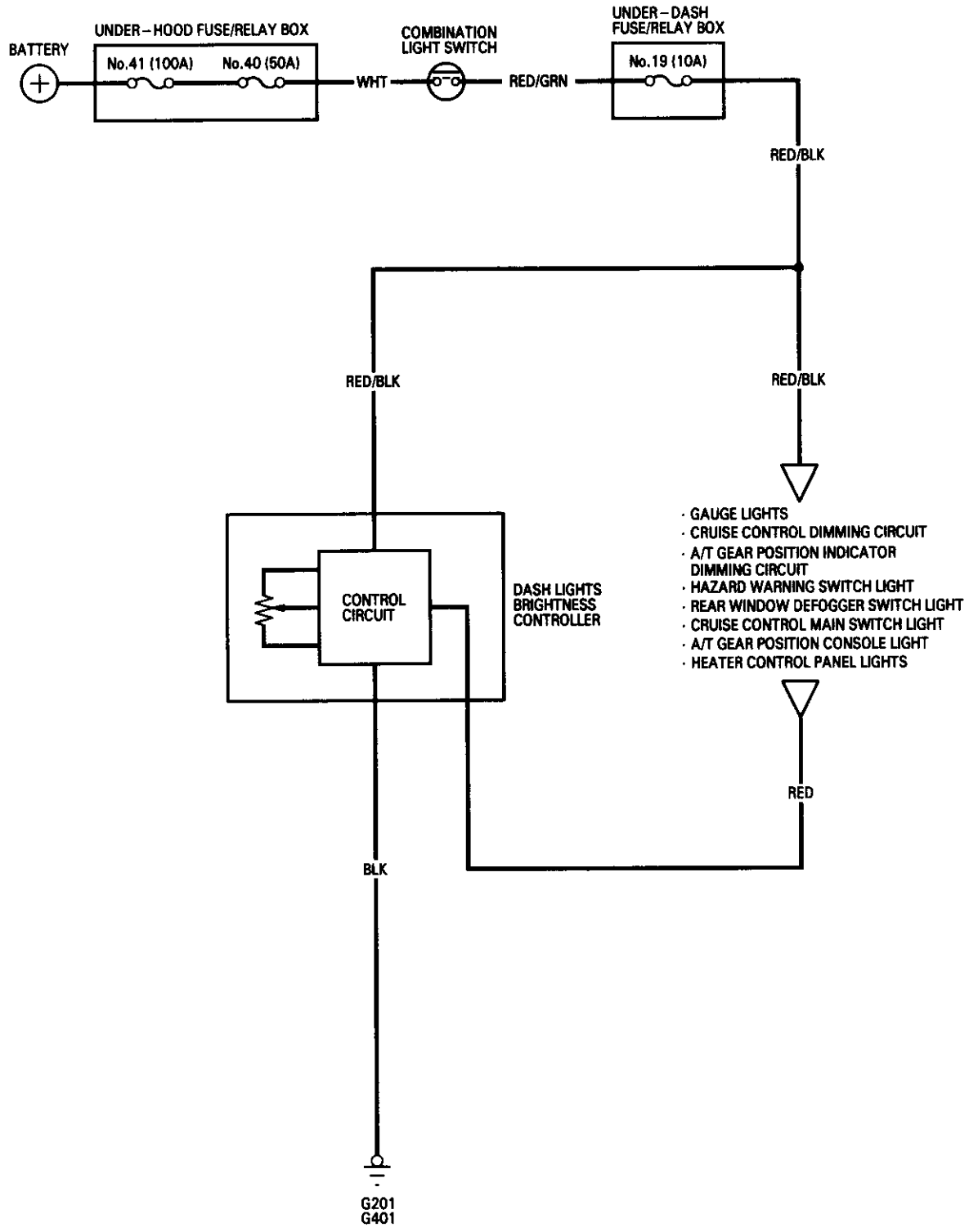

Controller Input Test

NOTE: Be careful not to damage the controller and the instrument panel.

1. Remove the instrument panel from the dashboard (see page 23-118).

2. Remove the dash lights brightness controller from the dashboard, then disconnect the 3-P connector.

3. Inspect the connector and socket terminals to be sure they are all making good contact.

   - If the terminals are bent, loose or corroded, repair them as necessary, and recheck the system.

   - If the terminals look OK, make the following input tests at the connector.
     - If any test indicates a problem, find and correct the cause, then recheck the system.
     - If all the input tests prove OK, the dash lights brightness controller must be faulty; replace it.

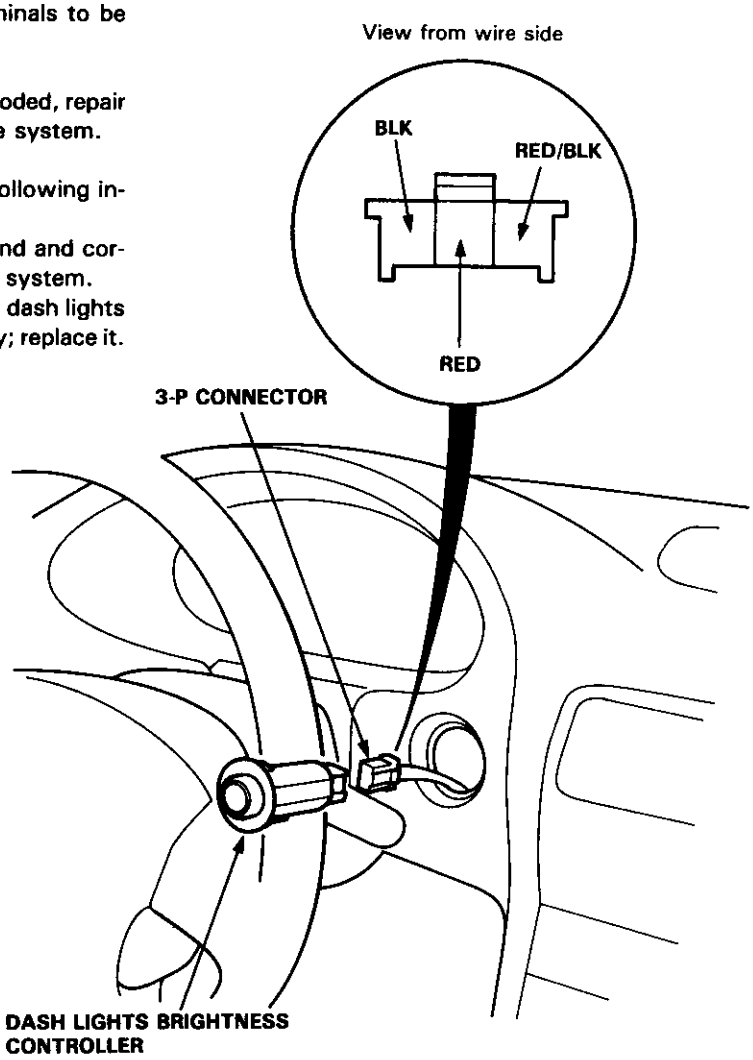

No.	Wire	Test condition	Test: Desired result	Possible cause if result is not obtained
1	BLK	Under all conditions	Check for continuity to ground: There should be continuity.	• Poor ground (G201, G401) • An open in the wire
2	RED/BLK	Headlight switch ON	Check for voltage to ground: There should be battery voltage.	• Blown No. 19 (10 A) fuse in the under-dash fuse/relay box • Faulty combination light switch • An open in the wire
3	RED	Headlight switch ON	Connect to ground: Dash lights should come on full bright.	• An open in the wire

Ceiling/Trunk/Cargo Area Lights, Spotlights

Component Location Index

*1: Sedan
*2: Hatchback

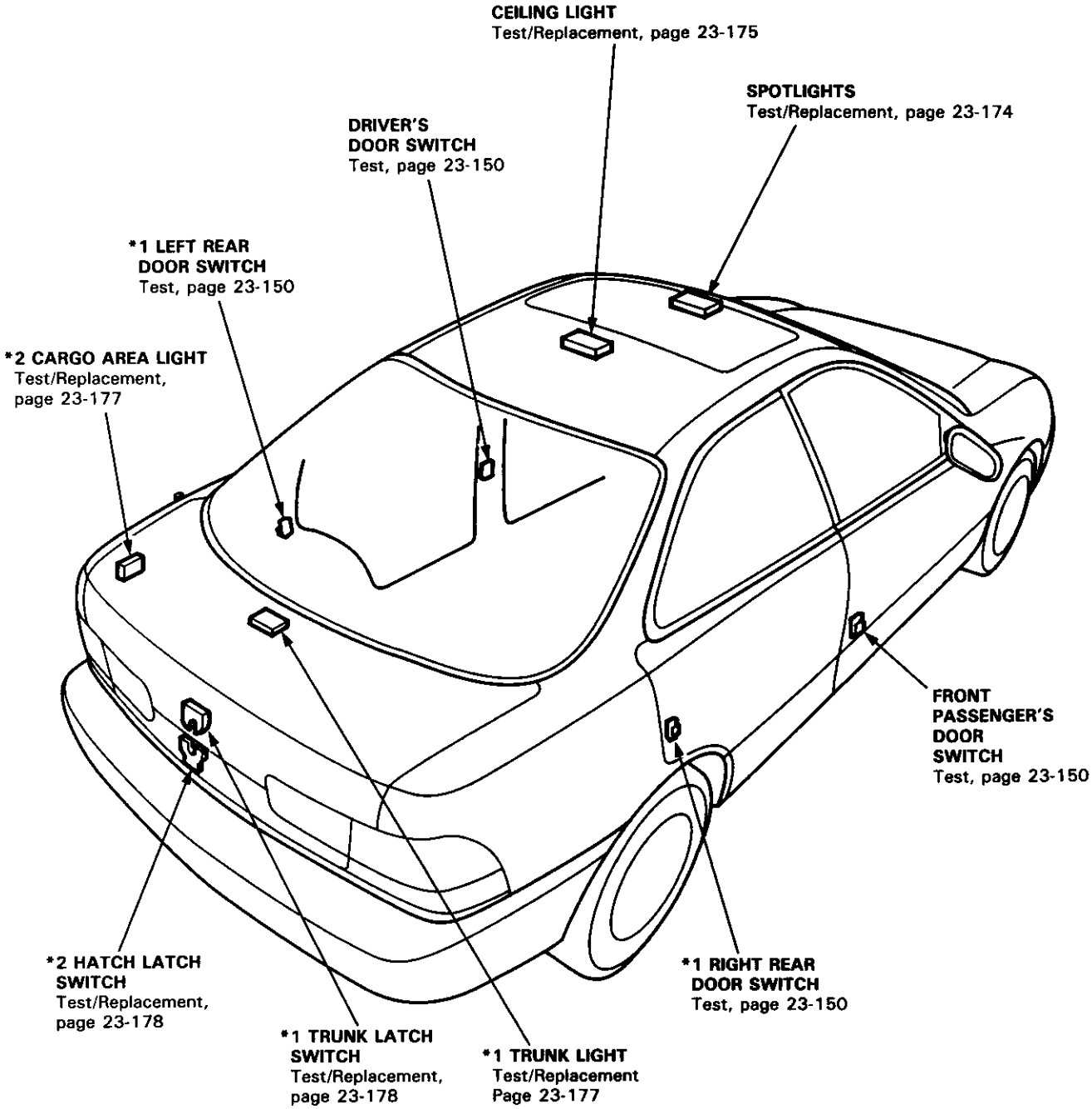

Circuit Diagram

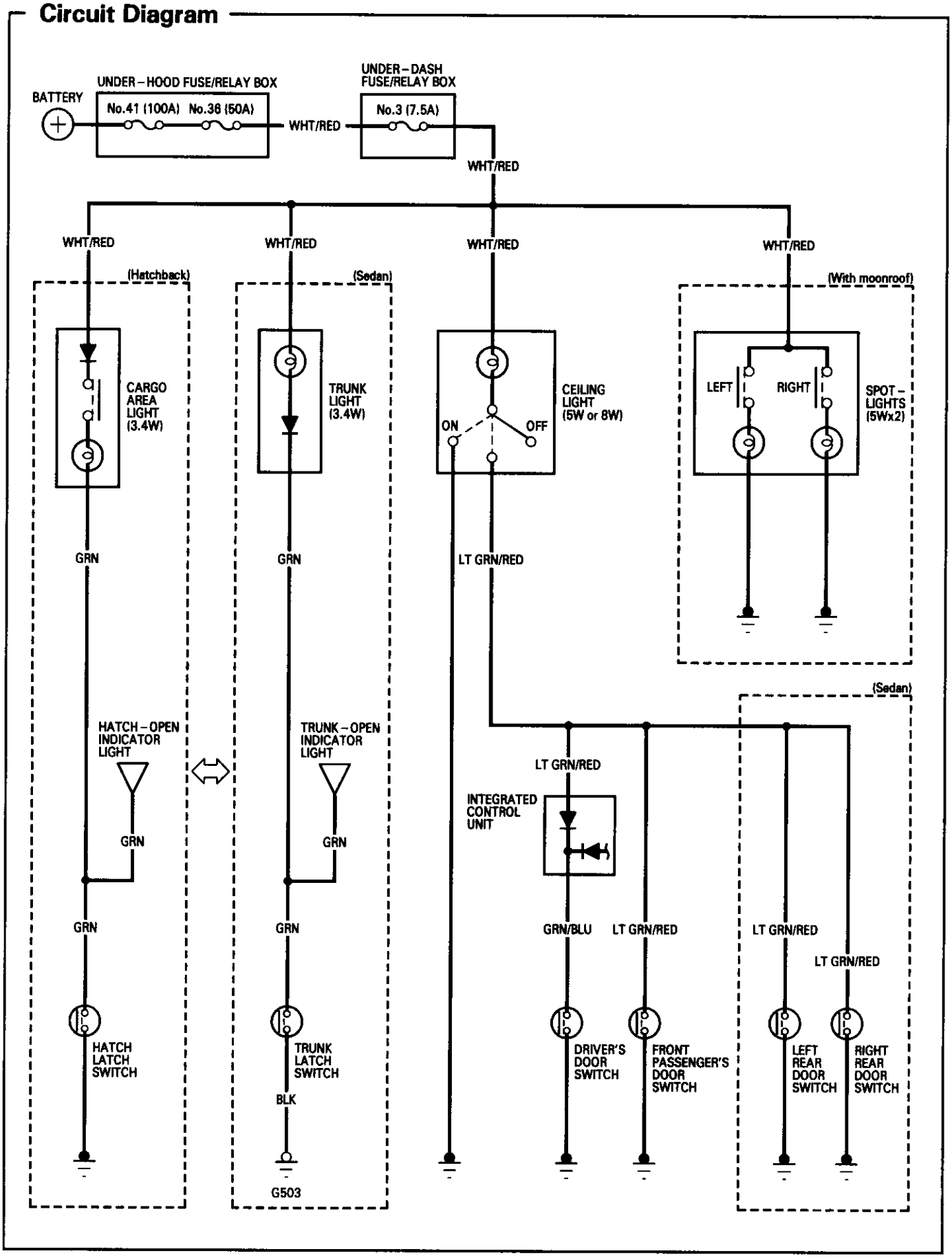

Spotlight Test/Replacement

1. Turn the light switch OFF.
2. Pry off the lens.
3. Remove the two screws, then pull out the housing.

Hatchback:

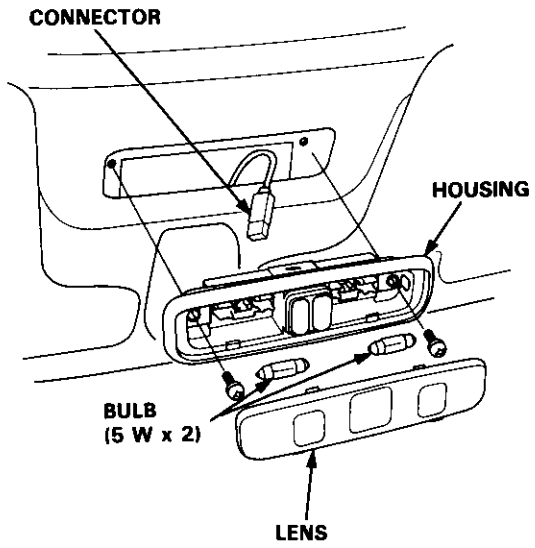

Sedan:

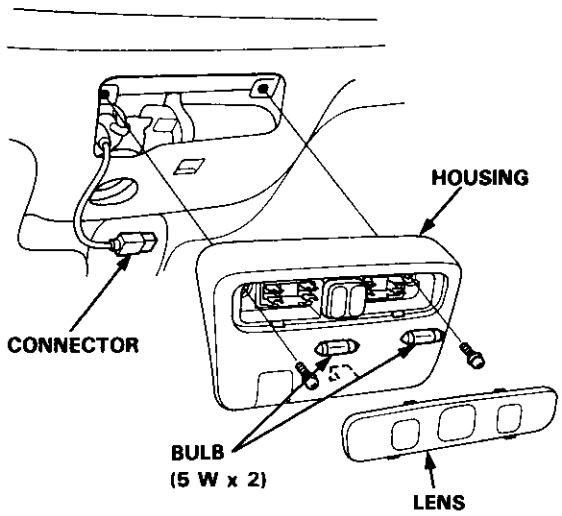

4. Disconnect the connector from the housing.
5. Check for continuity between the terminals in each switch position according to the table.

Position \ Terminal		A	B or B'		C or C'
LEFT	ON	○	○	⊖	○
	OFF				
RIGHT	ON	○	○	⊖	○
	OFF				

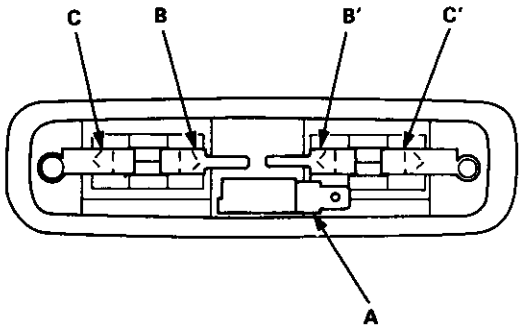

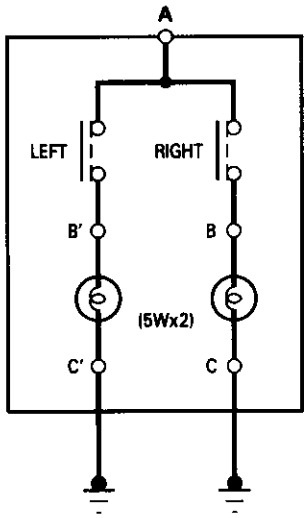

Ceiling Light Test/Replacement

With moonroof:

1. Turn the light switch OFF.
2. Pry off the lens.
3. Remove the two mounting nuts, then pull out the housing.

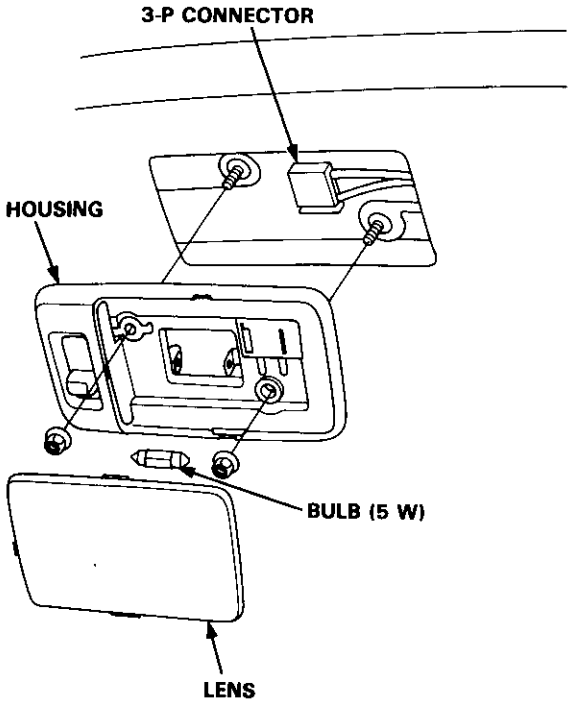

4. Disconnect the 3-P connector from the housing.

5. Check for continuity between the terminals in each switch position according to the table.

Position \ Terminal	A		B or B'	C	D
OFF	○	⊖		○	
DOOR	○	⊖	○	○	
ON	○	⊖		○	○

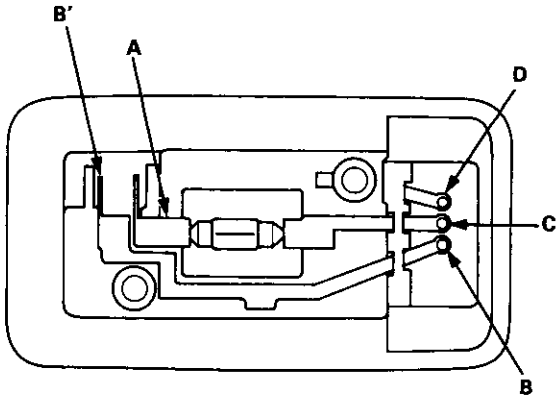

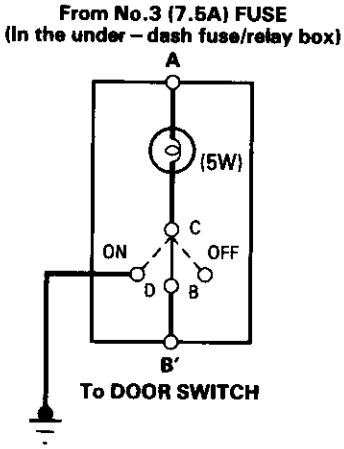

Ceiling Light Test/Replacement

Without moonroof:

1. Turn the light switch OFF.
2. Pry off the lens.
3. Remove the screw, then pull out the housing.

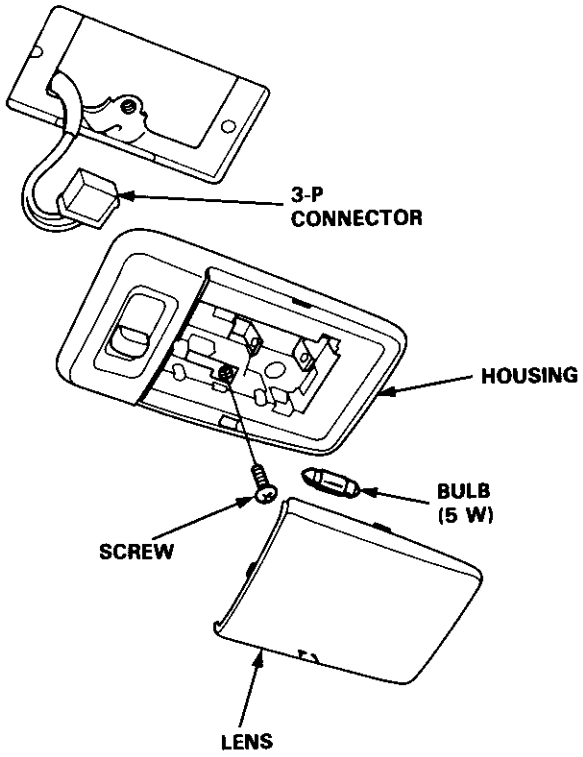

4. Disconnect the 3-P connector from the housing.

5. Check for continuity between the terminals in each switch position according to the table.

Terminal / Position	A		B or B'	C	D
OFF	○	⊗		○	
DOOR	○	⊗	○	○	
ON	○	⊗		○	○

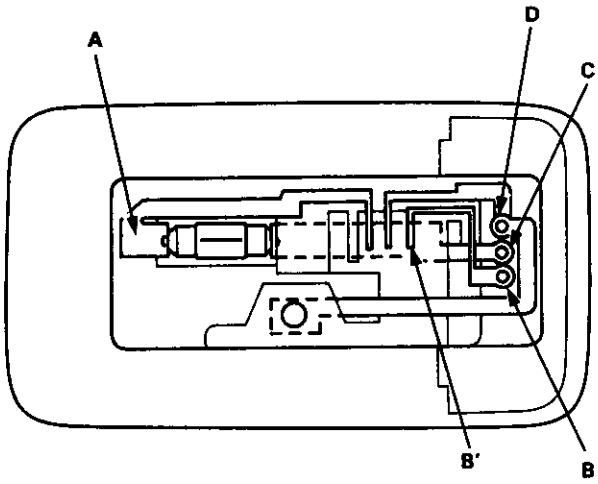

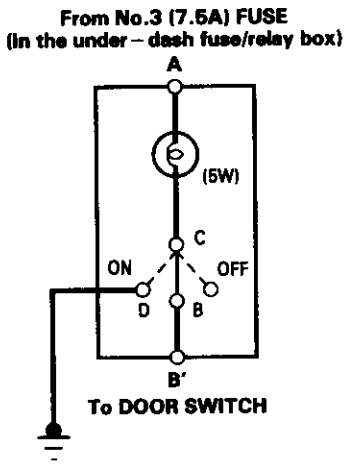

Trunk/Cargo Area Light Test/Replacement

1. Pry the trunk/cargo area light lens out of its housing.
2. Pry out the light assembly.
3. Disconnect the 2-P connector from the housing.

Hatchback:

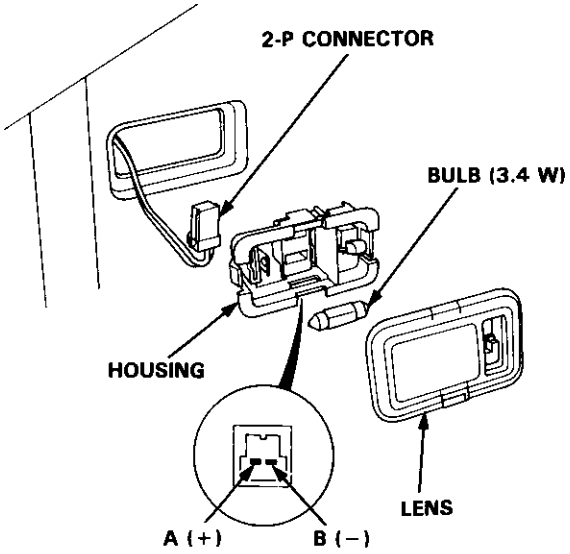

Sedan:

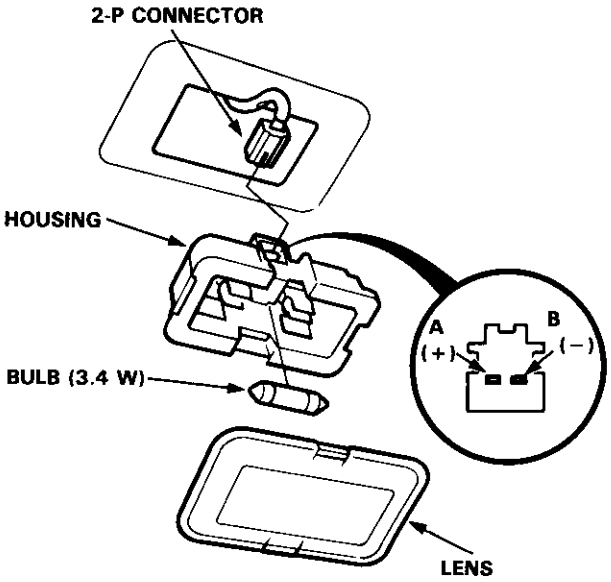

4. Make sure that the bulb is in good condition. Check for continuity between the A (+) and B (−) terminals. There should be continuity (Hachback: the switch must be pushed).

Hatchback:

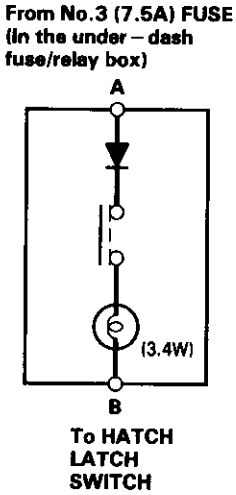

Sedan:

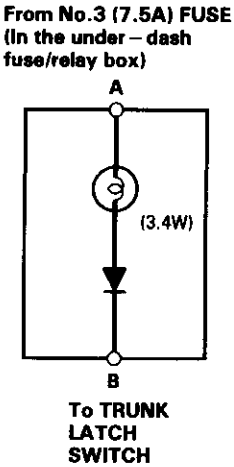

Latch Switch Test/Replacement

Sedan:

1. Open the trunk lid, and disconnect the 2-P connector from the trunk latch switch.
2. There should be continuity between the A and B terminals.

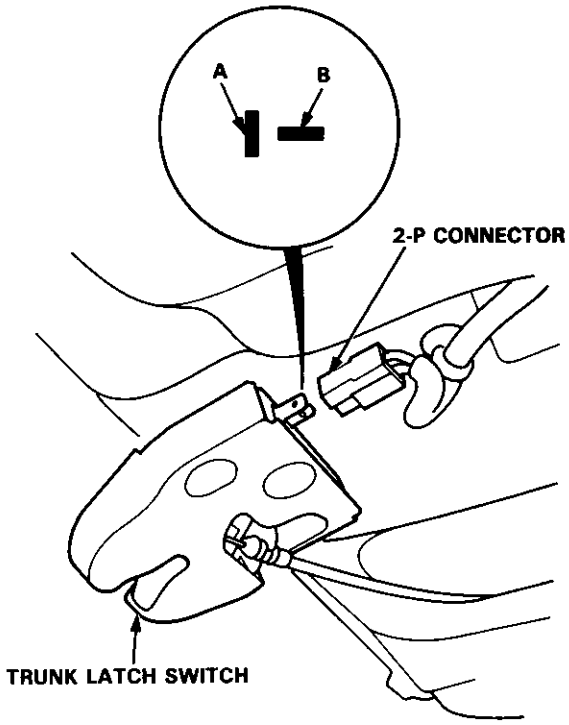

3. If necessary, remove the three mounting bolts to pull out the trunk latch switch from the trunk lid, then disconnect the lock rod from the trunk latch switch.
4. Disconnect the trunk opener cable from the trunk latch switch.

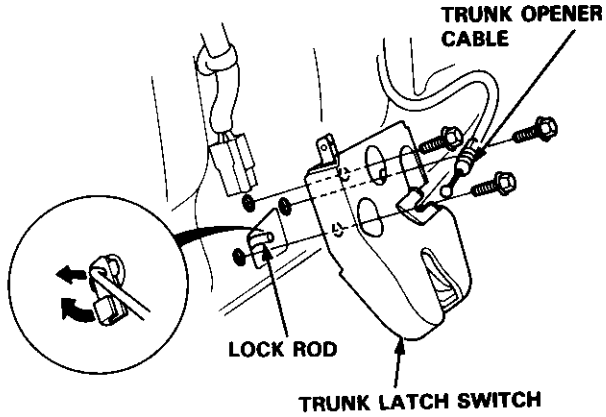

Hatchback:

1. Open the hatch, and disconnect the 2-P connector from the hatch latch switch.
2. There should be continuity between the A terminal and component ground.

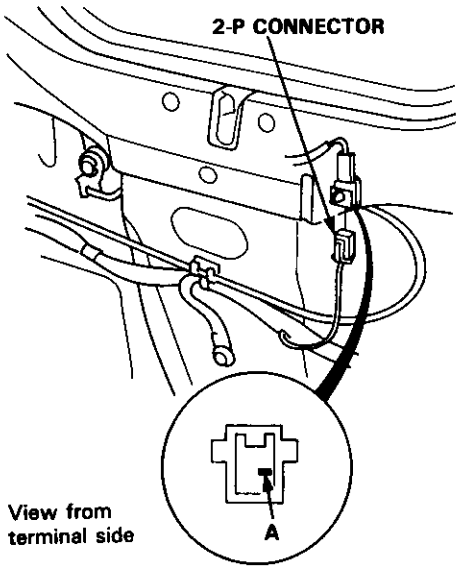

3. If necessary, remove the three mounting bolts to pull out the hatch latch switch from the latch, then disconnect the lock rod from the hatch latch switch.
4. Disconnect the hatch opener cable from the hatch latch switch.

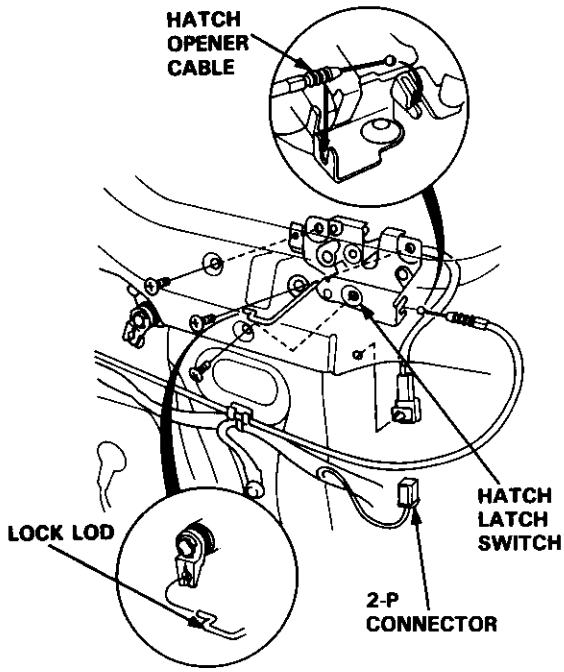

Back-up Lights

Circuit Diagram

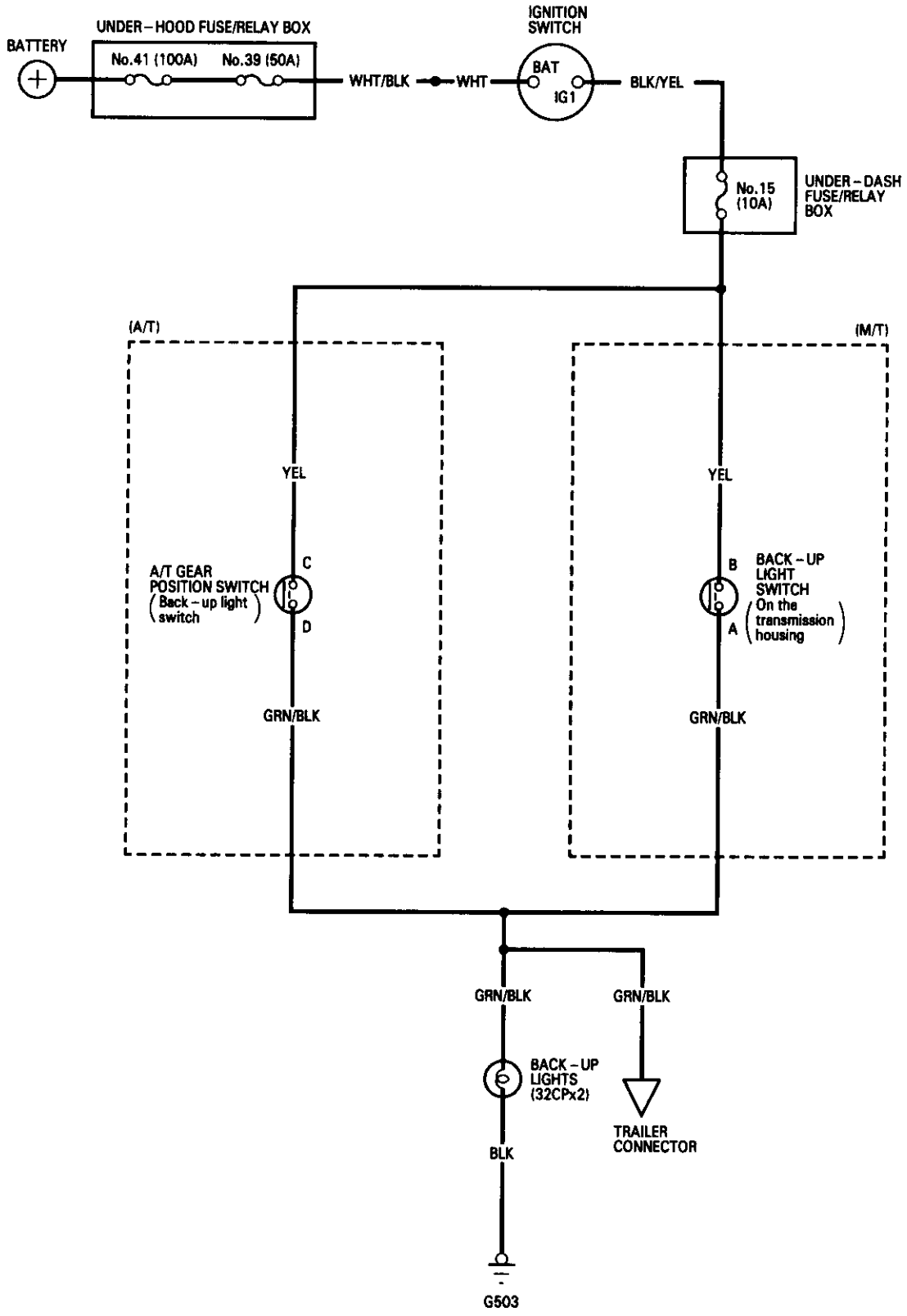

Back-up Lights

Test

Manual Transmission:

NOTE: Check the No. 15 (10 A) fuse in the under-dash fuse/relay box before testing.

1. Test the back-up light switch by placing the shift lever in reverse and turning the ignition switch to ON (II).
2. If the back-up lights do not go on, check the back-up light bulbs in the taillight assembly.
3. If the fuse and bulbs are OK, disconnect the connector from the back-up light switch.

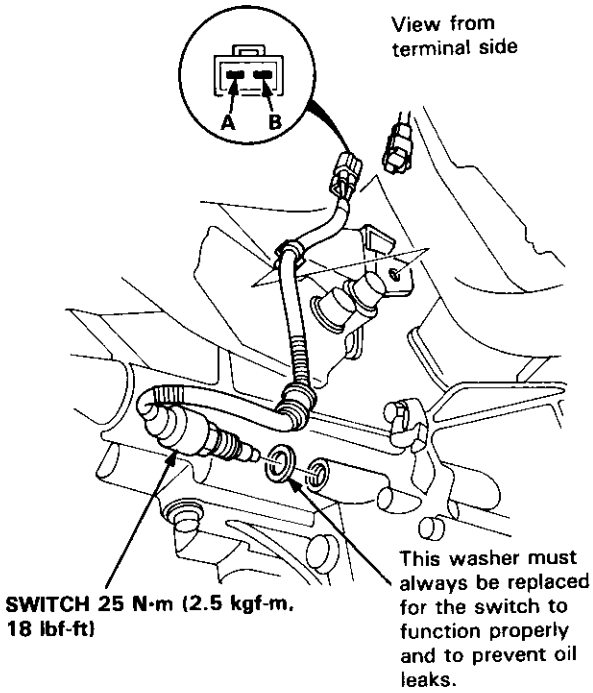

4. With the shift lever in reverse, check for continuity between the A and B terminals with the switch installed.
   There should be continuity.
   - If there is no continuity, replace the switch (see section 13).
   - If there is continuity, but the back-up lights do not go on, check for:
     - Poor ground (G503)
     - An open in the wire

Automatic Transmission:

NOTE: Check the No. 15 (10 A) fuse in the under-dash fuse/relay box before testing.

1. Test the back-up light switch by shifting the shift lever to [R] and turning the ignition switch ON (II).
2. If the back-up lights do not go on, check the back-up light bulbs in the taillight assembly.
3. If the fuse and bulbs are OK, disconnect the 14-P connector from the A/T gear position switch (back-up light switch).

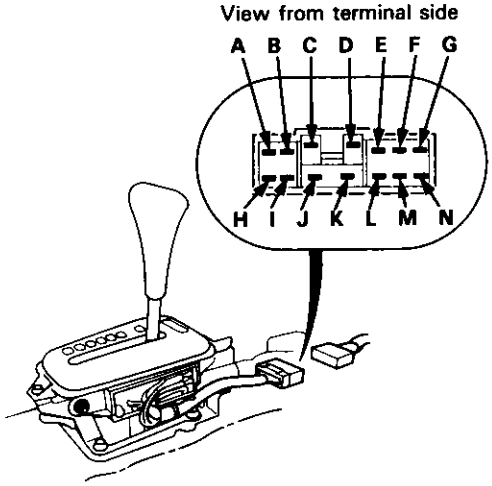

4. Move the lever back and forth at the [R] position without touching the push button, and check for continuity between the C and D terminals. There should be continuity within the range of free play of the shift lever.
   - If there is no continuity within the range of free play, adjust the position of the A/T gear position switch (see section 14).
   - If there is continuity, but the back-up lights do not go on,check for:
     - Poor ground (G503)
     - An open in the wire

Brake Lights

Circuit Diagram

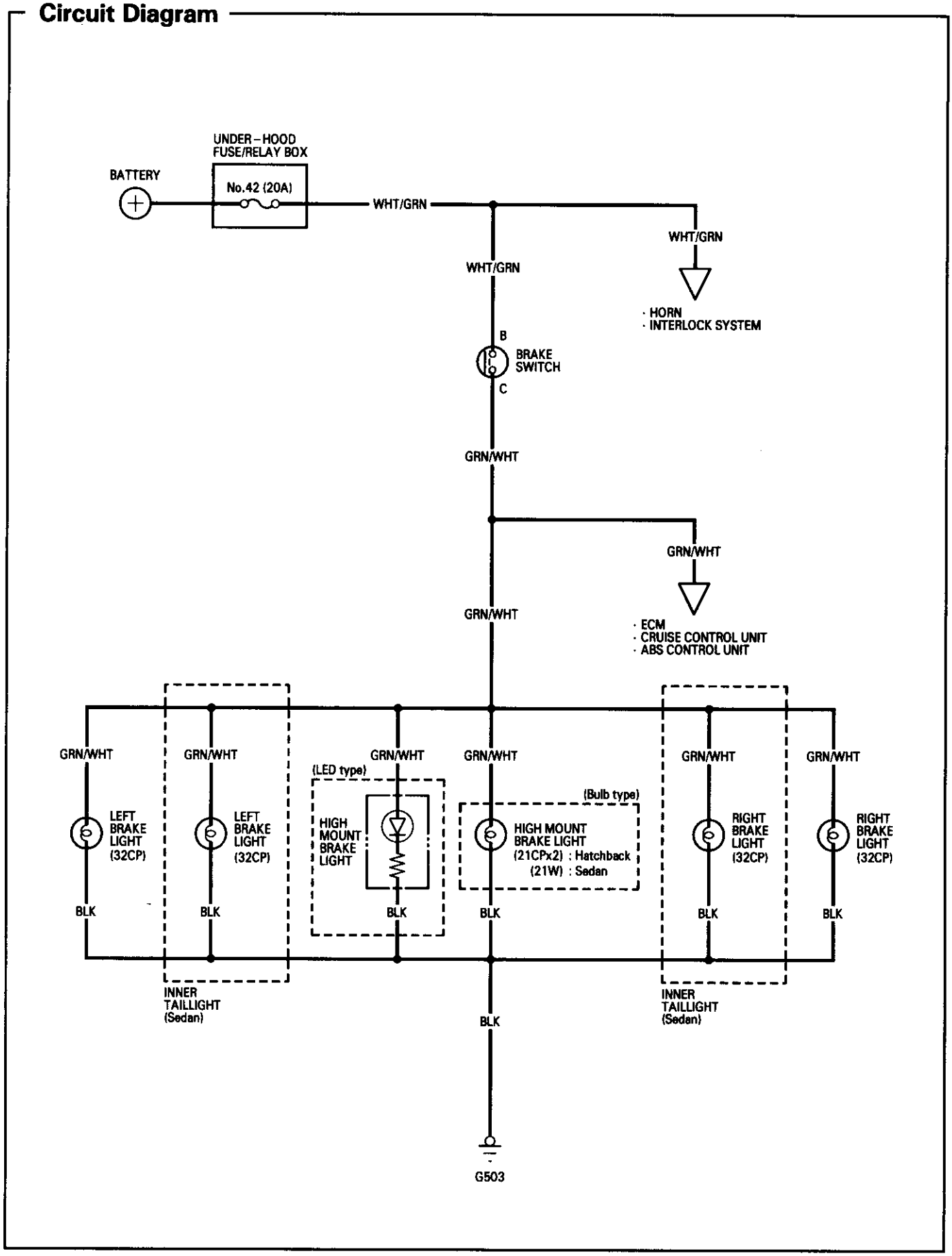

Brake Lights

Brake Switch Test

1. If the brake lights do not go on, check the No. 42 (20 A) fuse in the under-hood fuse/relay box, and the brake light bulbs in the taillight assembly and high mount brake light.

2. If the fuse and bulbs are OK, disconnect the 2-P or 4-P connector from the brake switch.

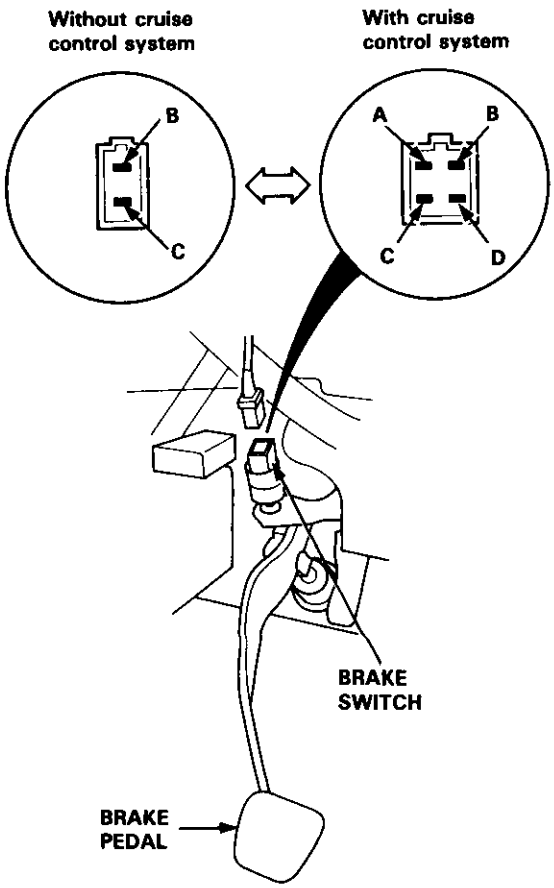

3. Check for continuity between the B and C terminals. There should be continuity with the brake pedal pushed.

   - If there is no continuity, replace the switch or adjust pedal height (see section 19).

   - If there is continuity, but the brake lights do not go on, inspect for:
     — Poor ground (G503)
     — An open in the wire

High Mount Brake Light Replacement (LED type)

1. Remove the four screws and the high mount brake light, then disconnect the connectors.

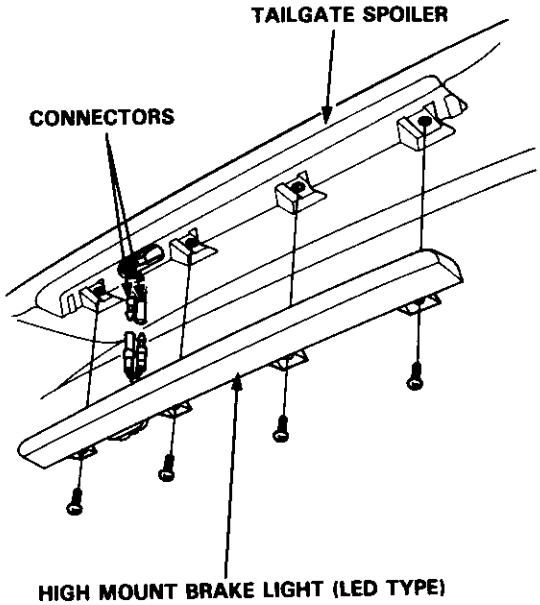

High Mount Brake Light Replacement (Bulb type)

Hatchback:

1. Open the hatch.
2. Remove the two clips and the cover.
3. Remove the two nuts and the high mount brake light, then disconnect the 2-P connector.

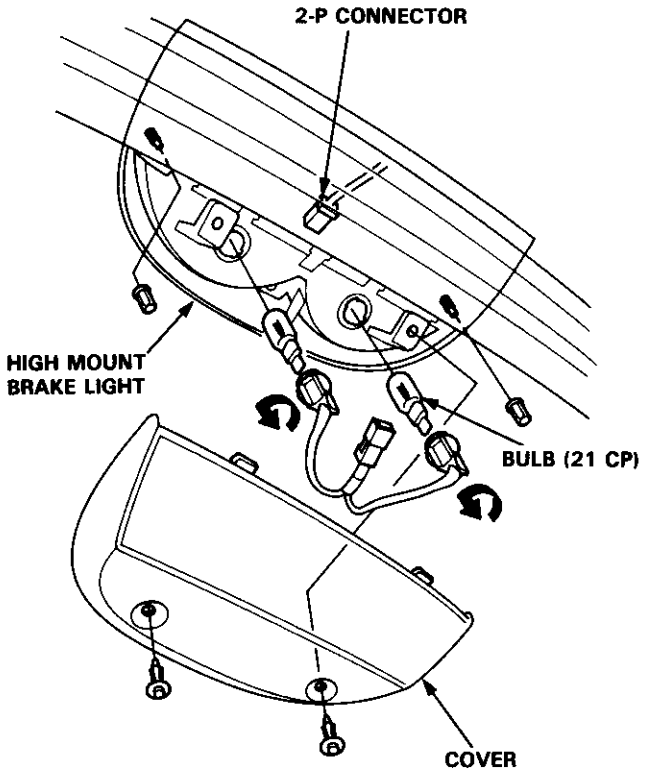

4. Turn the socket 45° counterclockwise to remove the bulb.
5. Install the high mount brake light in the reverse order of removal, and clean the rear window glass before installing.

   CAUTION: When installing the high mount brake light, make sure the rubber seal fits against the rear window evenly.

Sedan:

1. Open the trunk lid, and disconnect the 2-P connector from the high mount brake light.
2. Remove the two nuts, then remove the high mount brake light from the rear shelf.

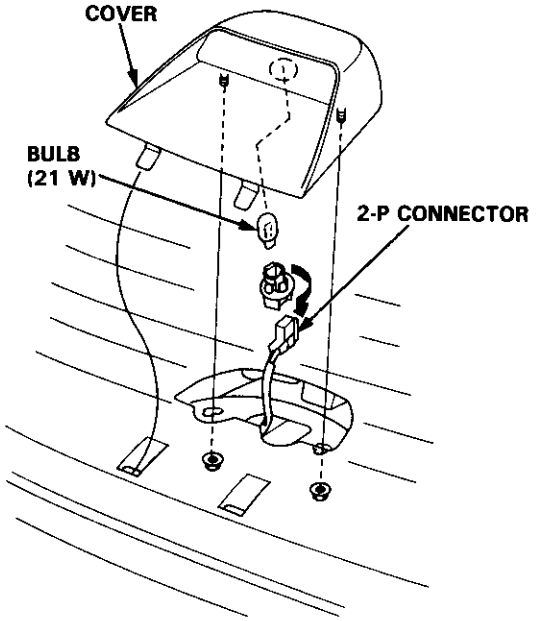

3. Install the high mount brake light in the reverse order of removal. Clean the rear window glass before installing the light.

Side Marker/Turn Signal/Hazard Flasher System

Component Location Index

CAUTION:

- **All SRS electrical wiring harnesses are covered with yellow insulation.**
- **Before disconnecting any part of the SRS wire harness, connect the short connector(s).**
- **Replace the entire affected SRS harness assembly if it has an open circuit or damaged wiring.**

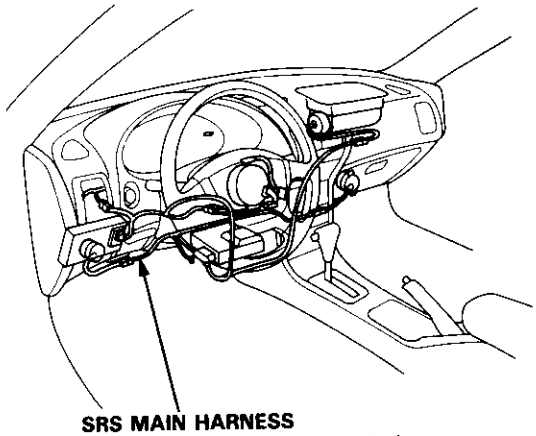

SRS MAIN HARNESS
(Covered with yellow insulation)

TURN SIGNAL INDICATOR LIGHTS
(In the gauge assembly)
Bulb Locations, page 23-115

COMBINATION LIGHT SWITCH
Replacement, page 23-160
Test, page 23-158

HAZARD WARNING SWITCH
Replacement, page 23-187
Test, page 23-187

UNDER-DASH FUSE/RELAY BOX

TURN SIGNAL/HAZARD RELAY
Input Test, page 23-186

Circuit Diagram

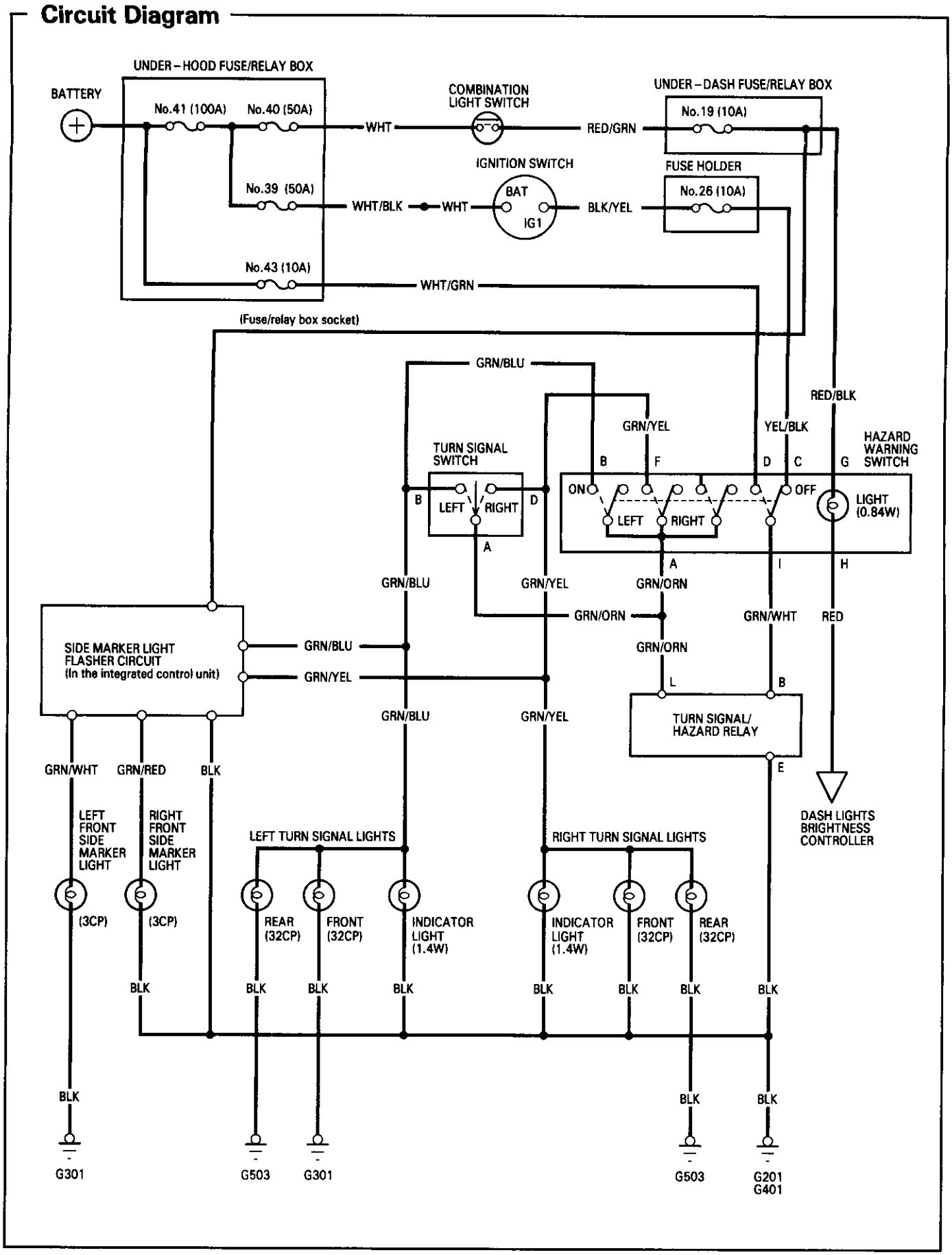

Turn Signal/Hazard Relay Input Test

CAUTION:
- **All SRS electrical wiring harnesses are covered with yellow insulation.**
- **Before disconnecting any part of the SRS wire harness, connect the short connector(s).**
- **Replace the entire affected SRS harness assembly if it has an open circuit or damaged wiring.**

1. Remove the turn signal/hazard relay from the under-dash fuse/relay box.

2. Inspect the relay and socket terminals to be sure they are all making good contact.

   - If the terminals are bent, loose or corroded, repair them as necessary, and recheck the system.
   - If the terminals look OK, make the following input tests at the socket.
     - If a test indicates a problem, find and correct the cause, then recheck the system.
     - If all the input tests prove OK, the turn signal/hazard relay must be faulty; replace it.

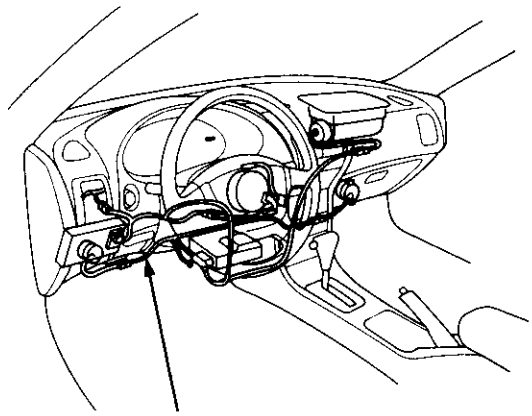

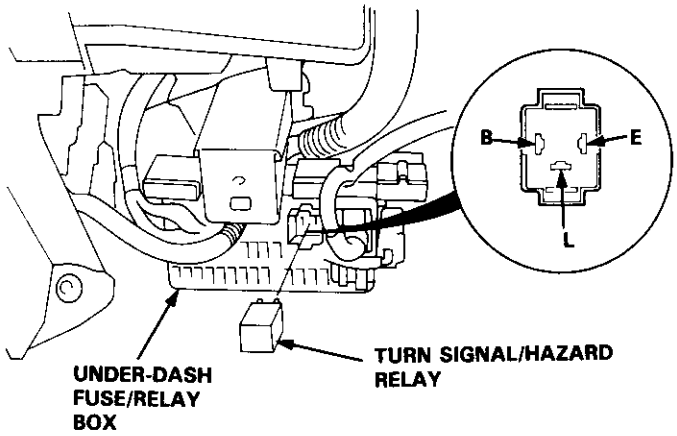

No.	Terminal	Test condition	Test: Desired result	Possible cause if result is not obtained
1	E	Under all conditions	Check for continuity to ground: There should be continuity.	• Poor ground (G201, G401) • An open in the wire
2	B	Ignition switch ON (II) and hazard warning switch OFF	Check for voltage to ground: There should be battery voltage.	• Blown No. 26 (10 A) fuse in the fuse holder • Faulty hazard warning switch • An open in the wire
		Ignition switch OFF and hazard warning switch ON	Check for voltage to ground: There should be battery voltage.	• Blown No. 43 (10 A) fuse in the under-hood fuse/relay box • Faulty hazard warning switch • An open in the wire
3	L	Hazard warning switch is ON; connect the B terminal to the L terminal.	Hazard lights should come on.	• Poor ground (G201, G301, G401, G503) • Faulty hazard warning switch • An open in the wire
		Ignition switch ON (II) and turn signal switch in right or left; connect the B terminal to the L terminal.	Right or left turn signal lights should come on.	• Faulty turn signal switch • An open in the wire

Hazard Warning Switch Replacement

CAUTION: Be careful not to damage the switch and console panel.

1. Pry the hazard warning switch out of the center vent.
2. Disconnect the 10-P connector from the switch.

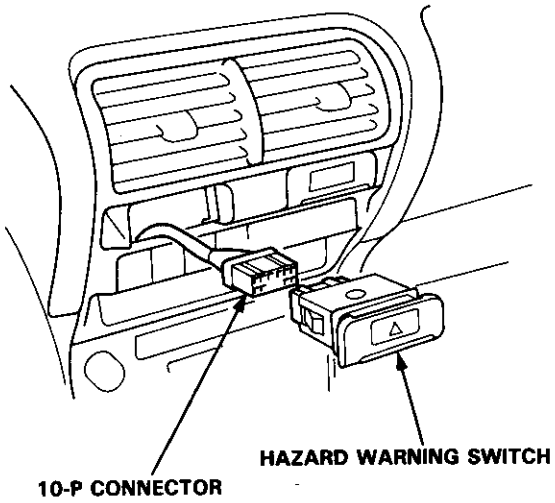

Hazard Warning Switch Test

1. Remove the hazard warning switch.
2. Check for continuity between the terminals in each switch position according to the table.

Position \ Terminal	A	B	C	D	F	G		H	I
OFF			○			○	⊖	○	○
ON	○	○		○	○	○	⊖	○	○

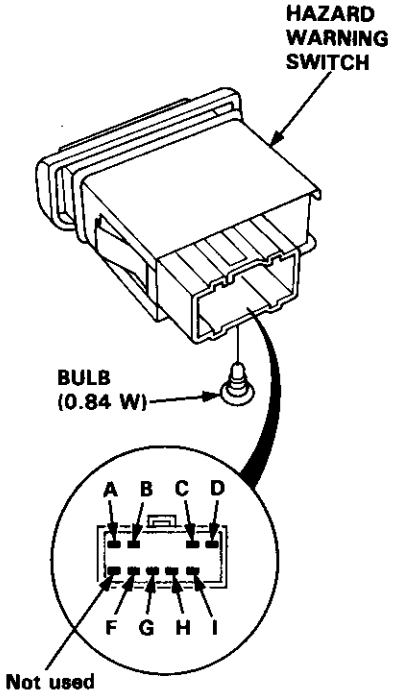

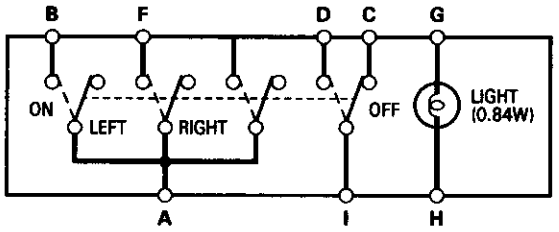

Stereo Sound System

Component Location Index

CAUTION:

- **All SRS electrical wiring harnesses are covered with yellow insulation.**
- **Before disconnecting any part of the SRS wire harness, connect the short connector(s).**
- **Replace the entire affected SRS harness assembly if it has an open circuit or damaged wiring.**

NOTE: The original radio has a coded theft protection circuit. Be sure to get the customer's code number before
– disconnecting the battery.
– removing the No. 32 (7.5 A) fuse from the under-hood fuse/relay box.
– removing the radio.
After service, reconnect power to the radio and turn it on. When the word "CODE" is displayed, enter the customer's 5-digit code to restore radio operation.

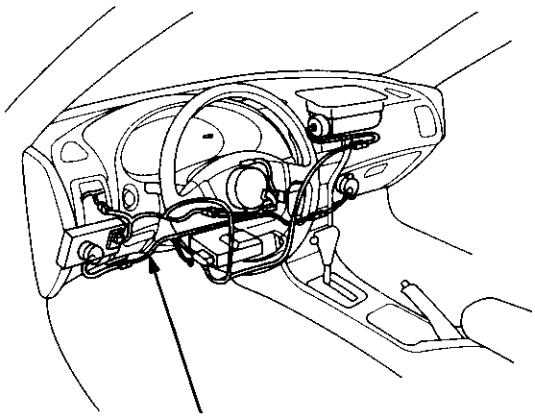

Hatchback:

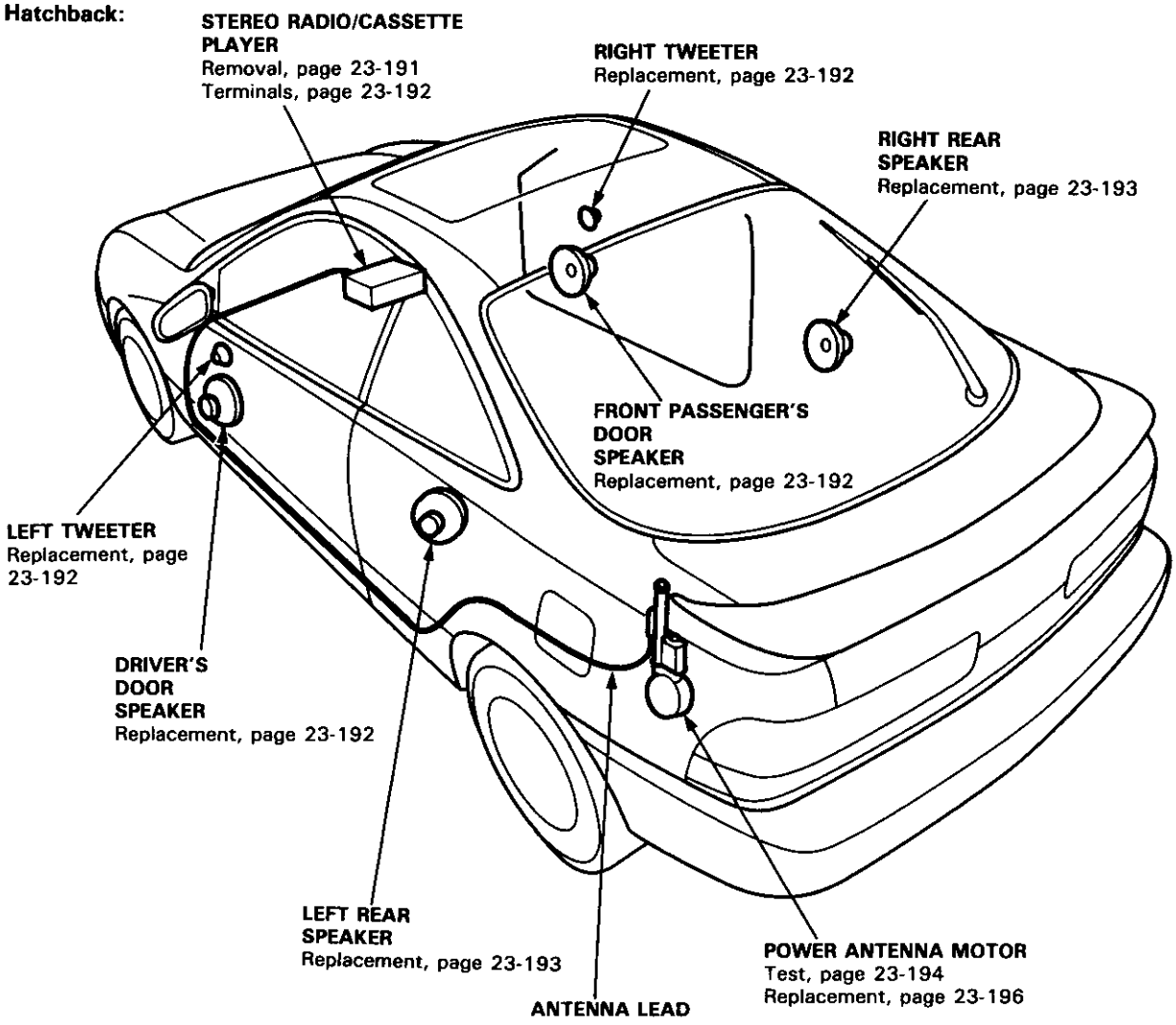

Sedan:

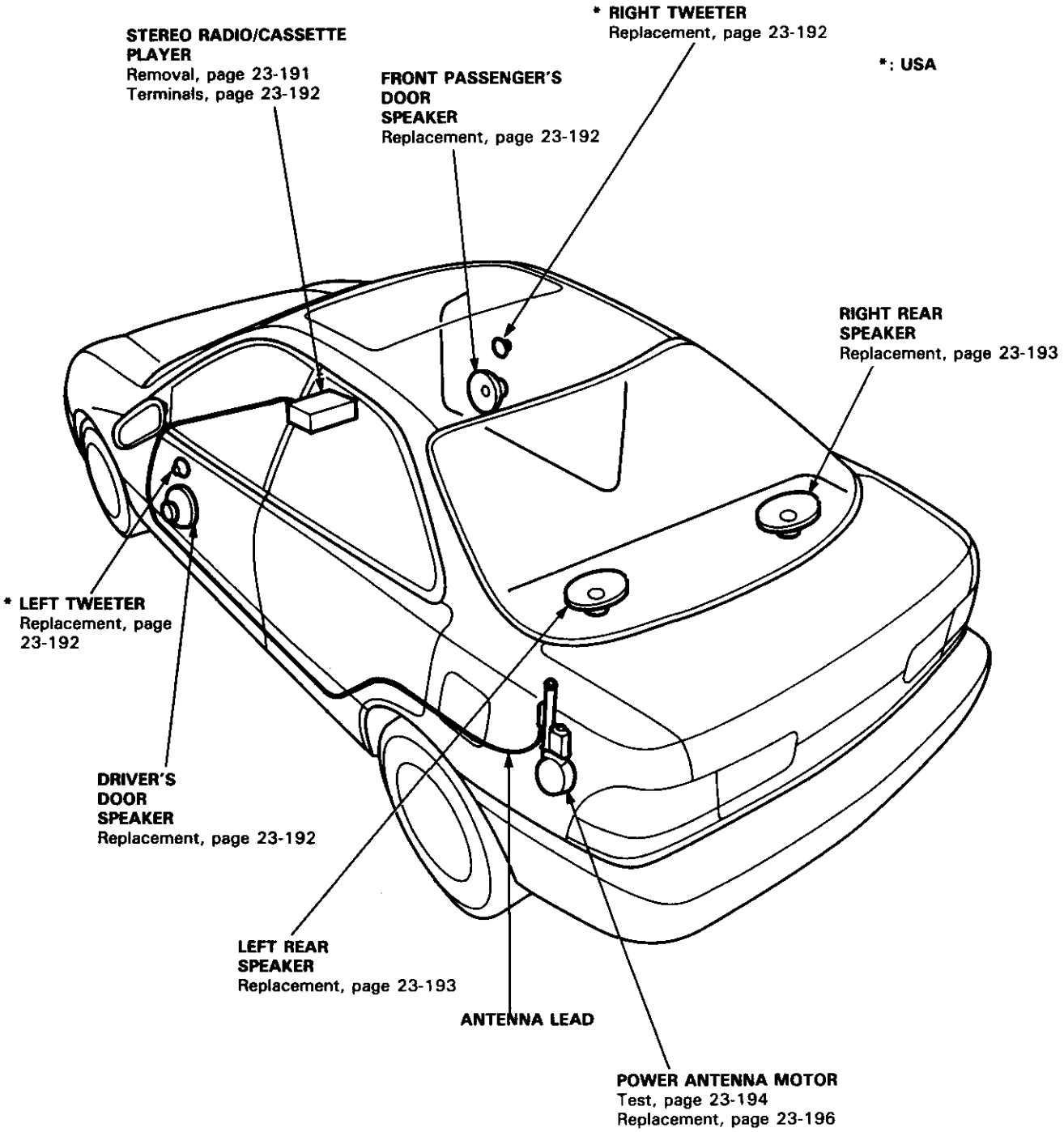
STEREO RADIO/CASSETTE PLAYER
Removal, page 23-191
Terminals, page 23-192
FRONT PASSENGER'S DOOR SPEAKER
Replacement, page 23-192
* RIGHT TWEETER
Replacement, page 23-192
*: USA
RIGHT REAR SPEAKER
Replacement, page 23-193
* LEFT TWEETER
Replacement, page 23-192
DRIVER'S DOOR SPEAKER
Replacement, page 23-192
LEFT REAR SPEAKER
Replacement, page 23-193
ANTENNA LEAD
POWER ANTENNA MOTOR
Test, page 23-194
Replacement, page 23-196

Stereo Sound System

Circuit Diagram

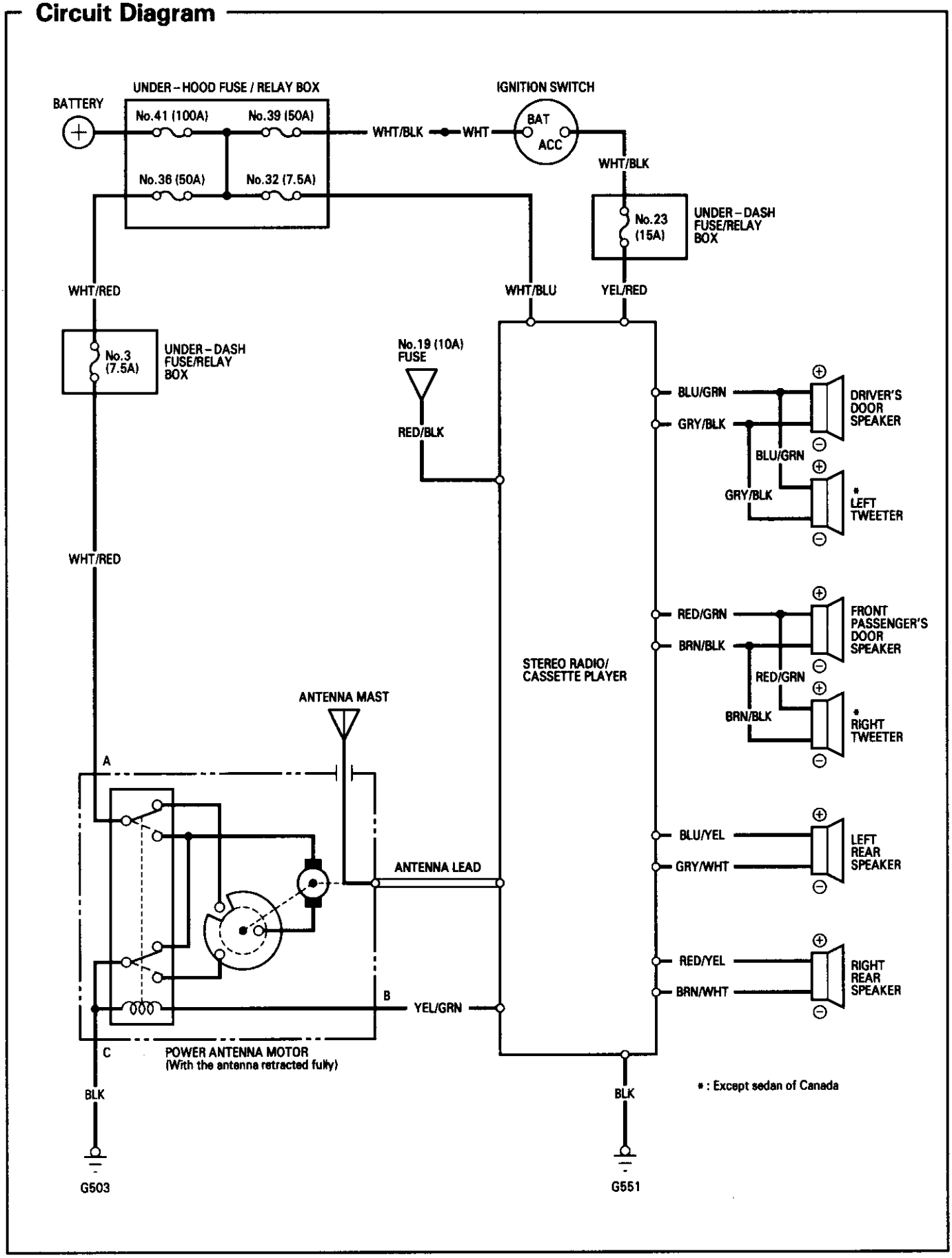

Unit Removal

CAUTION:
- **All SRS electrical wiring harnesses are covered with yellow insulation.**
- **Before disconnecting any part of the SRS wire harness, connect the short connector(s).**
- **Replace the entire affected SRS harness assembly if it has an open circuit or damaged wiring.**

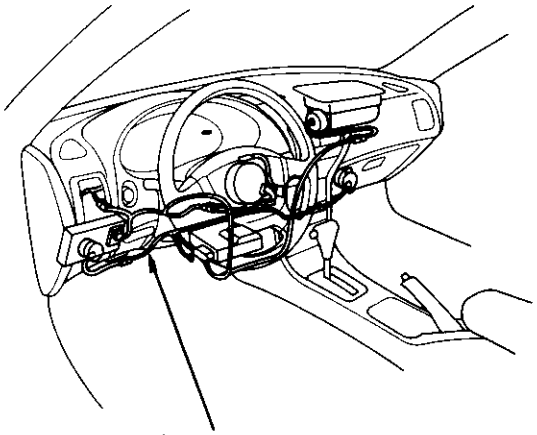

SRS MAIN HARNESS
(Covered with yellow insulation)

NOTE: The original radio has a coded theft protection circuit. Be sure to get the customer's code number before
- disconnecting the battery.
- removing the No. 32 (7.5 A) fuse in the under-hood fuse/relay box.
- removing the radio.

After service, reconnect power to the radio and turn it on. When the word "CODE" is displayed, enter the customer's 5-digit code to restore radio operation.

1. Remove the center console (see section 20).

2. Remove the cigarette lighter assembly (see page 23-205).

3. Remove the four mounting screws, then remove the front console.

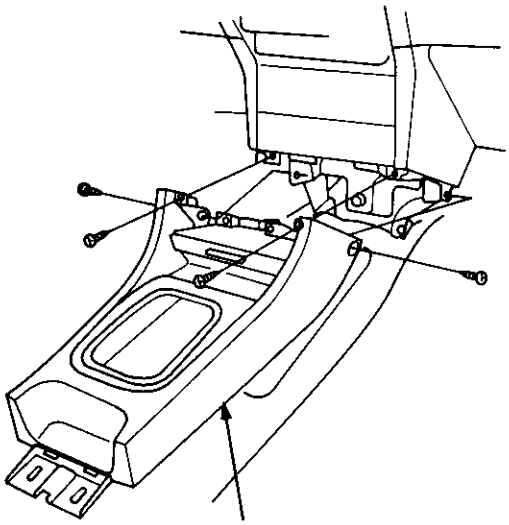

FRONT CONSOLE

4. Loosen the two mounting screws, then disconnect the 16-P connector and the antenna lead, and pull out the stereo radio/cassette player.

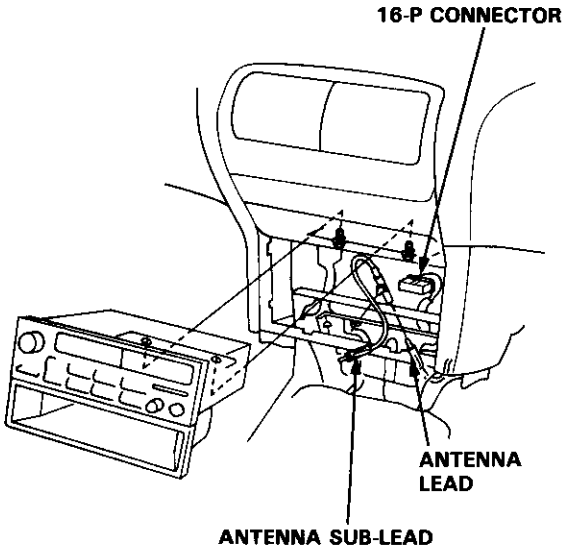

Stereo Radio/Cassette Player Terminals

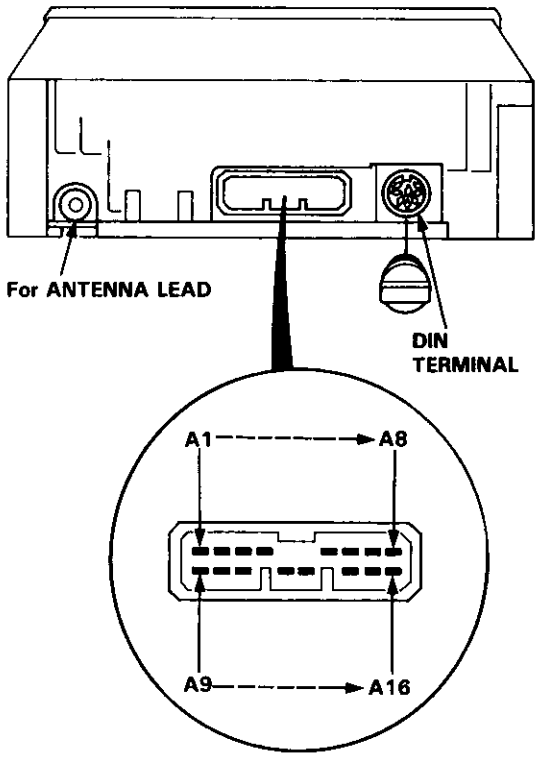

Terminal	Wire	Connects to
A1	RED/GRN	Front passenger's door speaker ⊕
A2	BLU/GRN	Driver's door speaker ⊕
A3	RED/BLK	Lights-on signal
A4	WHT/BLU	Constant power (Tuning memory)
A5	YEL/RED	ACC (Main stereo power supply)
A6	YEL/GRN	Radio switched power (To antenna)
A7	BLU/YEL	Left rear speaker ⊕
A8	RED/YEL	Right rear speaker ⊕
A9	BRN/BLK	Front passenger's door speaker ⊖
A10	GRY/BLK	Driver's door speaker ⊖
A11	——	(not used)
A12	——	(not used)
A13	——	(not used)
A14	BLK	Ground (G551)
A15	GRY/WHT	Left rear speaker ⊖
A16	BRN/WHT	Right rear speaker ⊖

Front Speaker/Tweeter Replacement

Front Speaker:

1. Carefully pry out the speaker cover.
2. Remove the three screws, then disconnect the 2-P connector from the speaker, and remove the speaker.

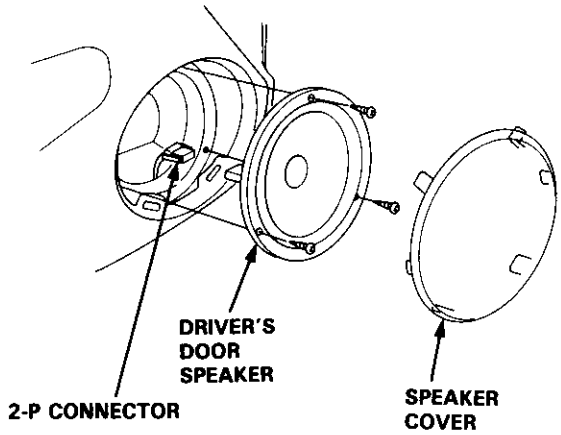

Tweeter:

1. Remove the door panel and disconnect the tweeter 2-P connector.
2. Remove the two screws, then remove the tweeter and cover.

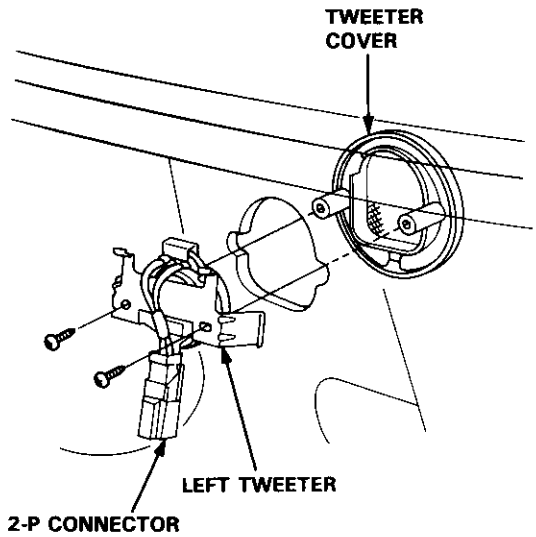

Rear Speaker Replacement

Hatchback:

1. Remove the speaker cover.
2. Remove the three screws, then disconnect the 2-P connecter from the rear speaker.

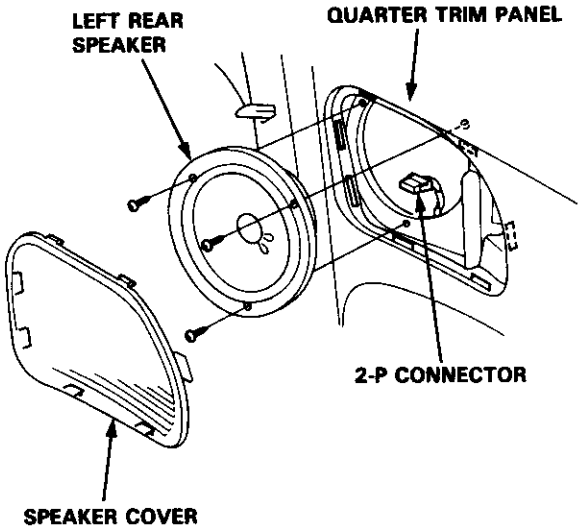

Sedan:

1. Remove the three screws from the trunk side, then remove the speaker cover.
2. Remove the four screws, then disconnect the 2-P connector from the speaker, and remove the speaker.

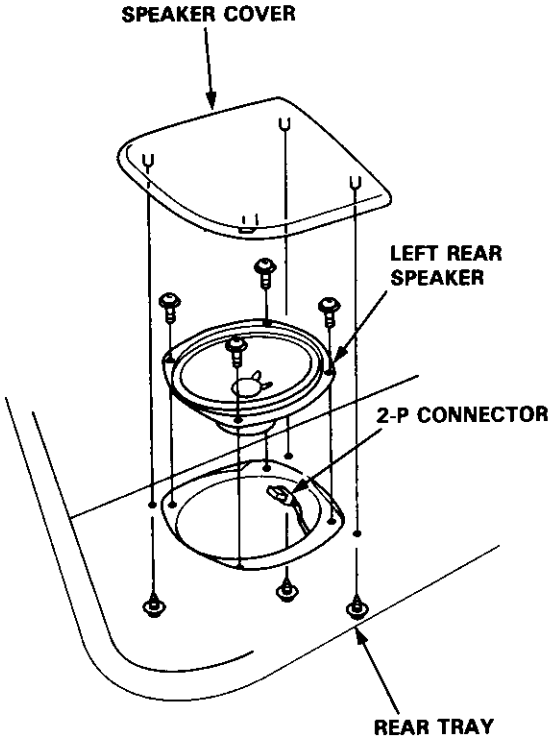

Power Antenna Motor Test

1. Remove the quarter trim panel (Hatchback) or trunk side trim panel (Sedan).

2. Disconnect the 3-P connector from the motor, and remove the connector from its clamp.

3. Check for power to the motor at the connector terminals:
   - There should be battery voltage between the WHT/RED (+) and BLK (−) terminals all the time.
   - There should be battery voltage between the YEL/GRN (+) and BLK (−) terminals only with the ignition and radio switched ON.

4. Test motor operation:

   EXTEND: Connect battery power to the "A" and "B" terminals and ground the "C" terminal.

   RETRACT: Then disconnect power from the "B" terminal.

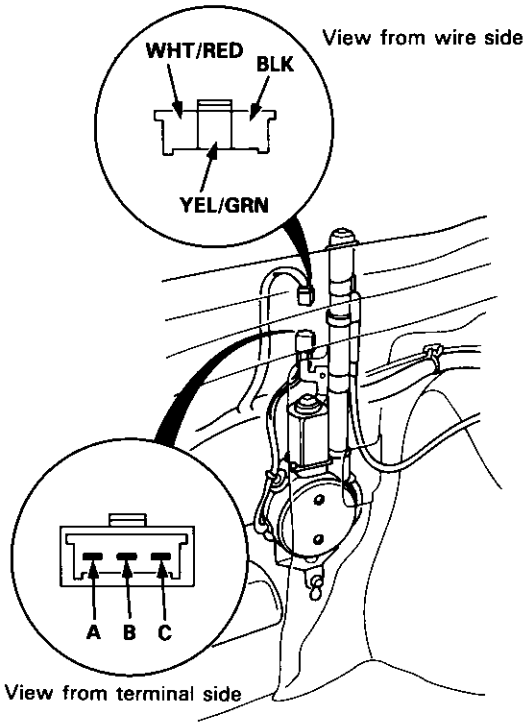

5. If the motor fails to run or does not run smoothly, replace it.

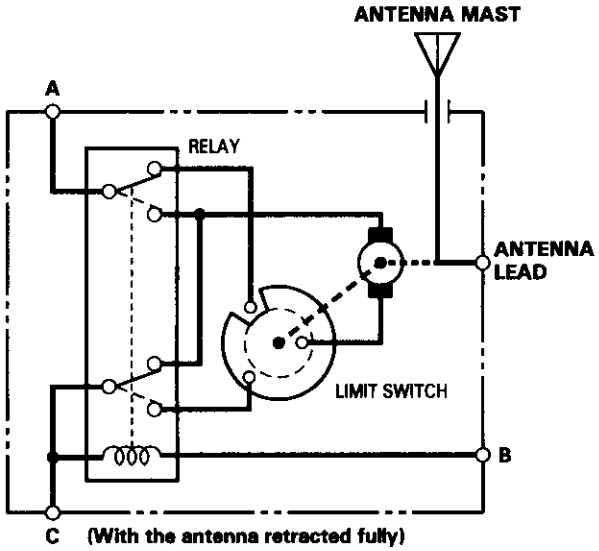

Sticking Antenna:
The antenna sticks in either the up or down position.

1. Using the antenna wrench, remove the antenna nut, spacer (see page 23-195).

2. Clean the antenna mast housing threads, and reinstall the spacer.

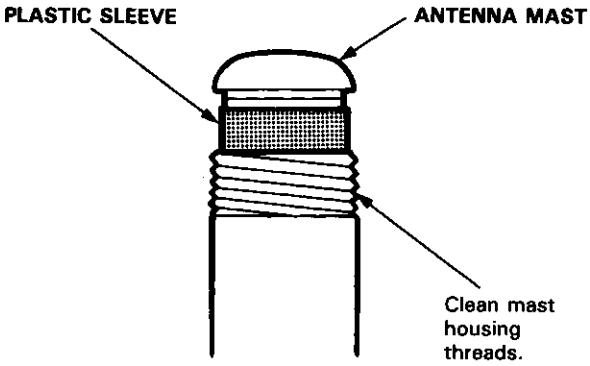

3. Use the antenna nut wrench and tighten the antenna nut to 2.3 N•m (0.23 kgf-m, 1.7 lbf-ft). If you overtightened the nut, the antenna may stick. If sticking occurs, back the nut off a little, then turn the radio on and off to raise and lower the antenna again. Repeat until the antenna moves freely.

Antenna Mast Replacement

Removal:

NOTE: The antenna mast alone can be replaced without having to remove the power antenna motor.

1. Remove the antenna nut and spacer.
2. Carefully withdraw the antenna mast while extending it by turning the radio switch ON.

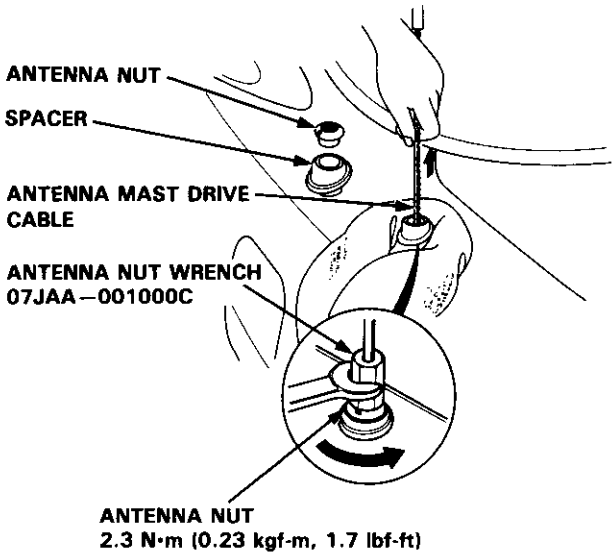

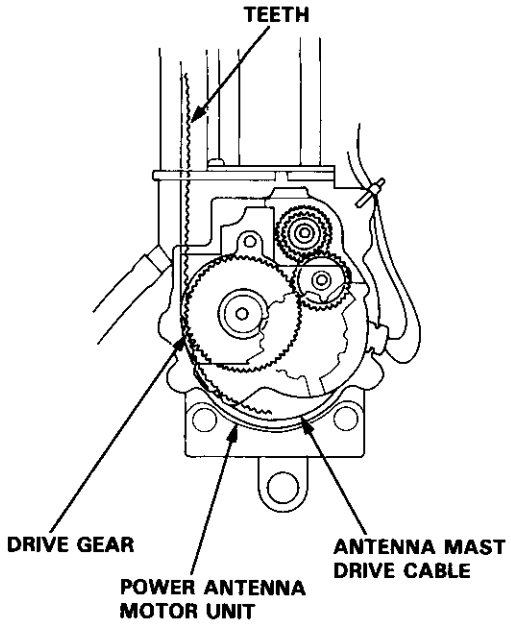

Installation:

1. Hold the antenna so that the teeth on the drive cable face in the direction shown, then insert the cable into the antenna housing.

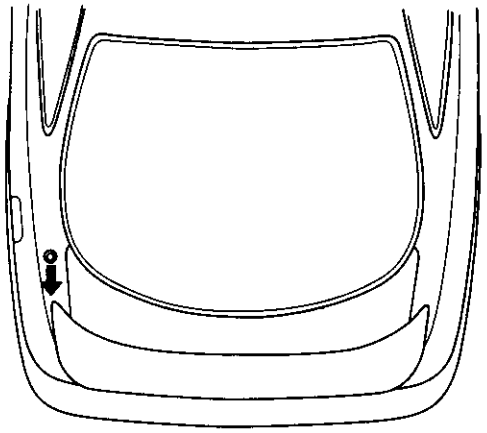

Direction of the teeth

2. Check for engagement of the cable teeth with the drive gear by carefully moving the cable up and down.
3. Turn the radio switch "OFF", and let the motor pull the drive cable into the antenna housing.
4. Clean the antenna housing threads, then insert the antenna into the housing. Install the bushing spacer, and install and tighten the antenna nut to 2.3 N•m (0.23 kgf-m, 1.7 lbf-ft).
5. Check that the antenna mast retracts and extends fully when the radio switch is turned ON and OFF repeatedly. If you overtightened the nut, the antenna may stick. If sticking occurs, back the nut off a little, then raise and lower the antenna again. Repeat until the antenna moves freely.

Power Antenna Motor Replacement

1. Remove the quarter trim panel (Hatchback) or trunk side trim panel (Sedan).

2. Disconnect the 3-P connector and antenna lead from the motor, then remove the antenna nut and motor bracket nut.

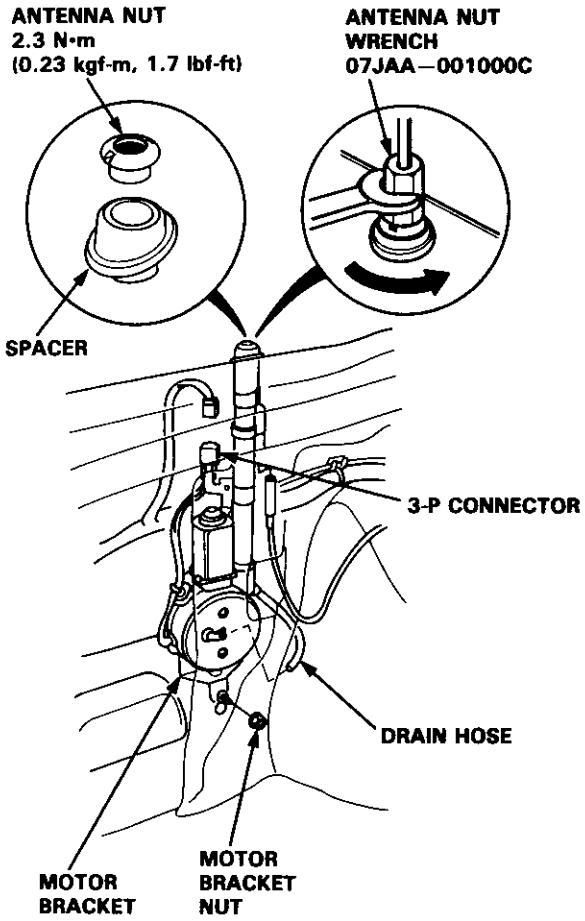

3. Remove the motor and antenna as an assembly.

   NOTE: Tighten the antenna nut, then tighten the motor bracket nut.

Clock

Circuit Diagram

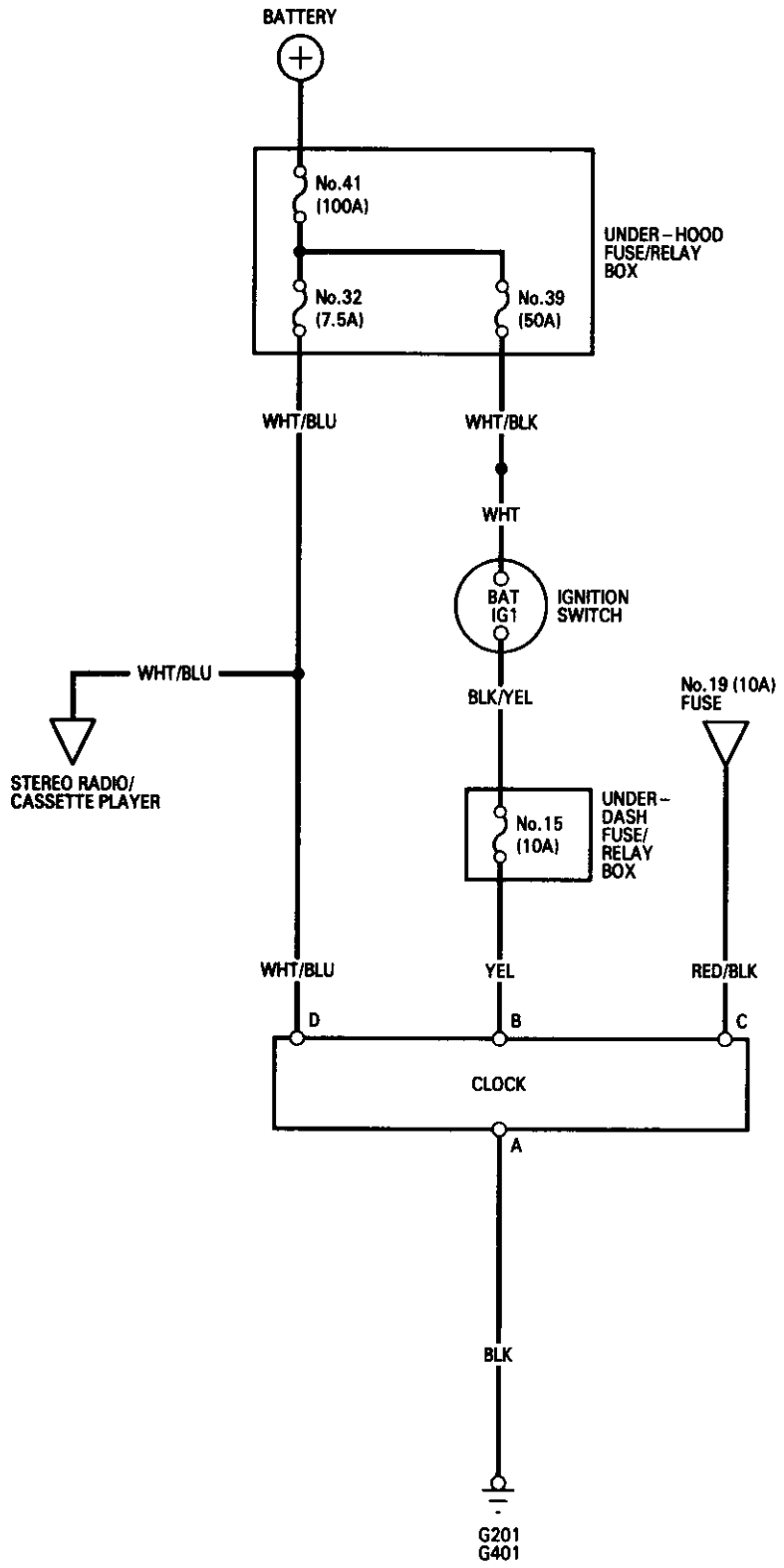

Clock

Replacement

CAUTION:
- **Pry the clock out at the left side.**
- **Be careful not to damage the clock and the dashboard when prying the clock out.**

1. Pry the clock out from the dashboard, then disconnect the 4-P connector.

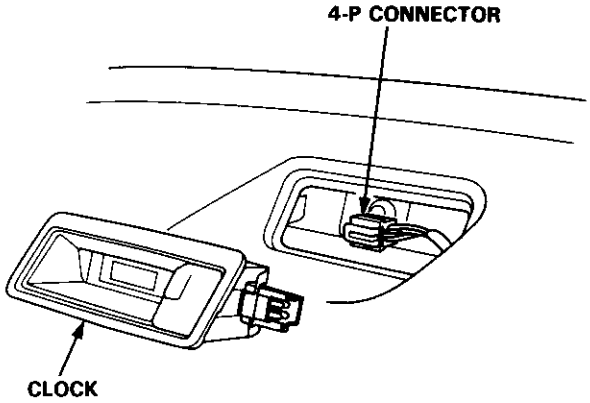

Terminals

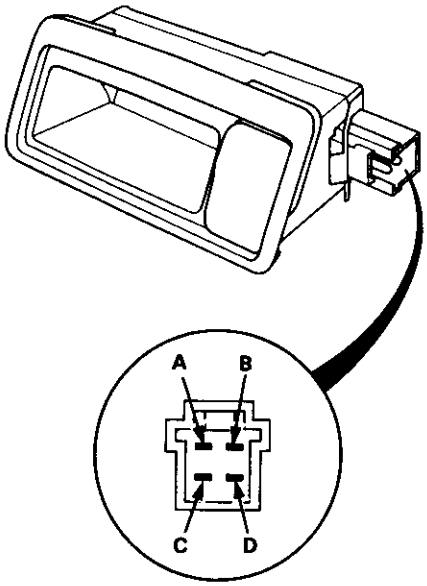

Terminal	Wire	Connects to
A	BLK	Ground
B	YEL	IG1 (Main clock power supply)
C	RED/BLK	Lights-on signal
D	WHT/BLU	Constant power (Time memory)

Horn

Component Location Index

CAUTION:
- **All SRS electrical wiring harnesses are covered with yellow insulation.**
- **Before disconnecting any part of the SRS wire harness, connect the short connector(s).**
- **Replace the entire affected SRS harness assembly if it has an open circuit or damaged wiring.**

HORN
Test, page 23-203

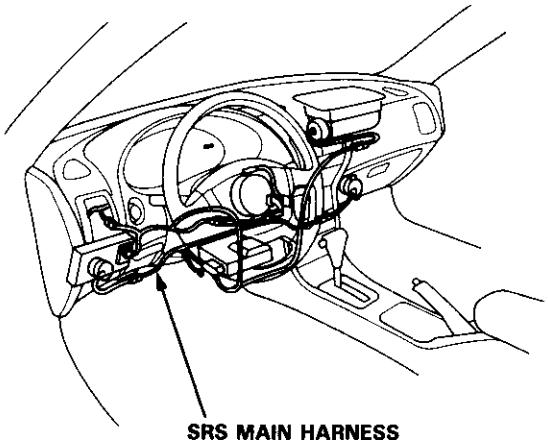

SRS MAIN HARNESS
(Covered with yellow insulation)

HORN SWITCHES
Test, page 23-201

UNDER-DASH FUSE/RELAY BOX

CABLE REEL
Replacement, page 23-302

HORN RELAY
[**Wire colors: BLU/RED, BLK, WHT/GRN, and BLU/GRN**]
Test, page 23-68

Horn

Circuit Diagram

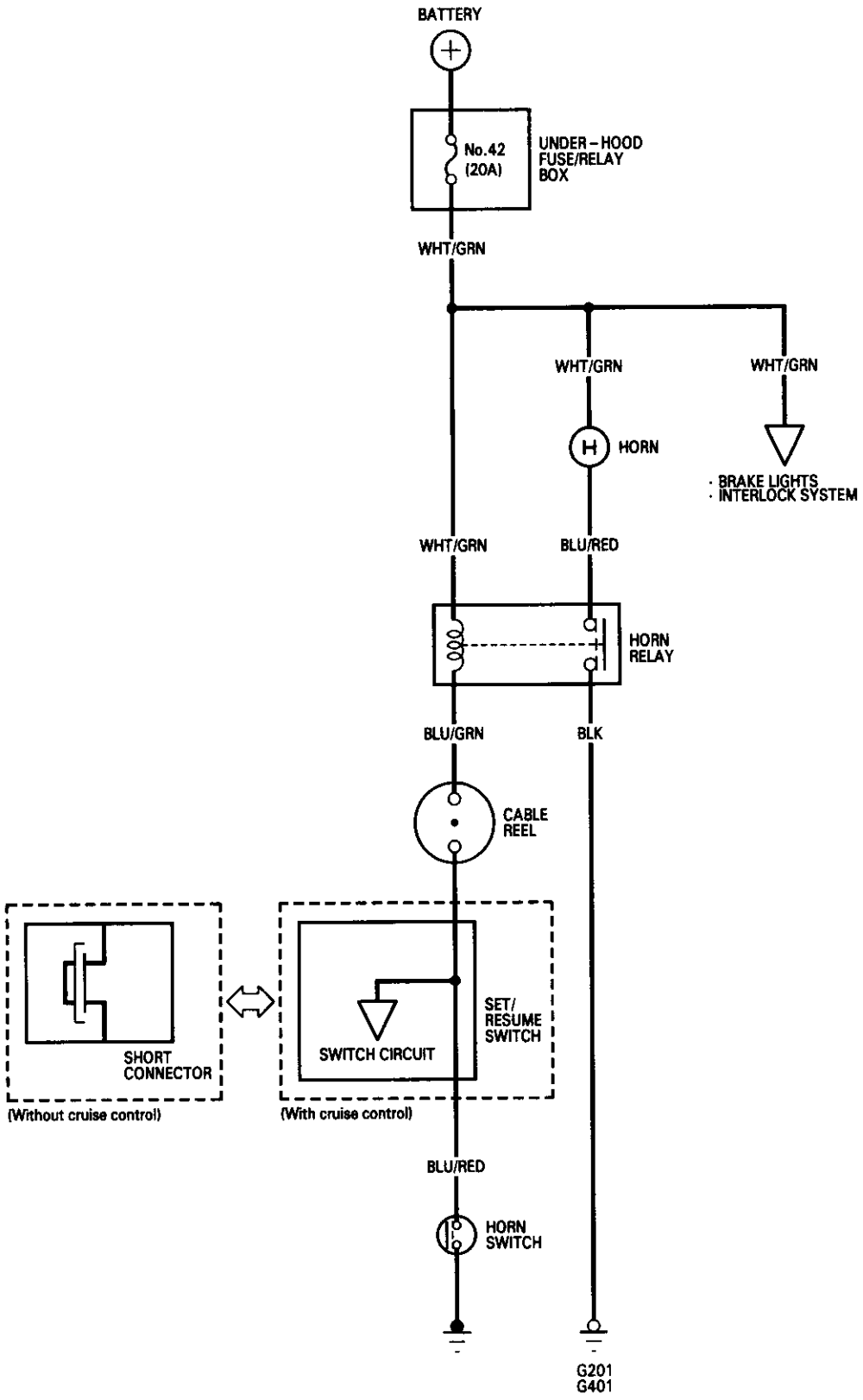

Switch Test

CAUTION:
- **All SRS electrical wiring harnesses are covered with yellow insulation.**
- **Before disconnecting any part of the SRS wire harness, connect the short connector(s).**
- **Replace the entire affected SRS harness assembly if it has an open circuit or damaged wiring.**

NOTE: The original radio has a coded theft protection circuit. Be sure to get the customer's code number before
– disconnecting the battery.
– removing the No. 32 (7.5 A) fuse from the under-hood fuse/relay box.
– removing the radio.
After service, reconnect power to the radio and turn it on. When the word "CODE" is displayed, enter the customer's 5-digit code to restore radio operation.

1. Disconnect the battery negative cable, then disconnect the positive cable.

2. Connect the short connector(s) to the airbag(s).

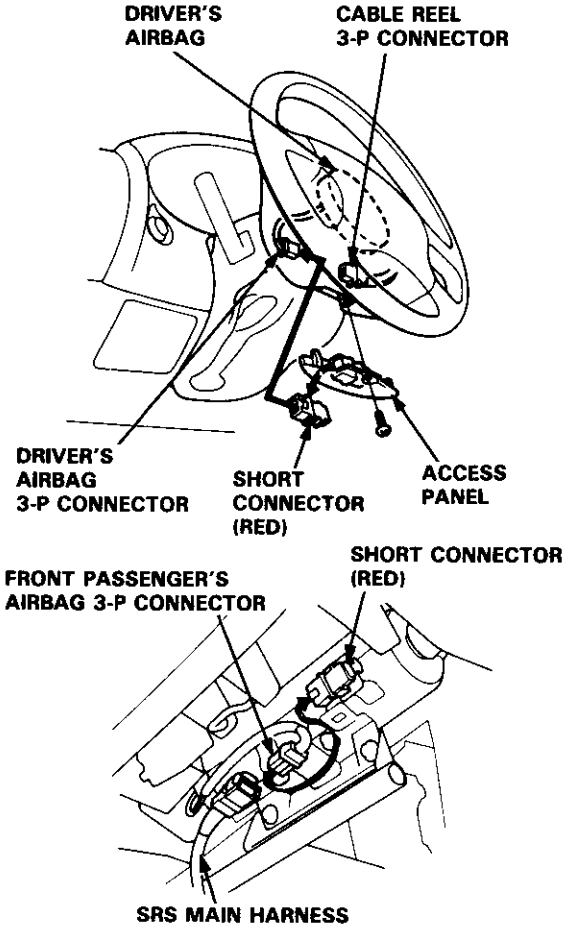

3. Remove the dashboard lower cover and knee bolster (see page 23-70).

4. Disconnect the cable reel harness 6-P connector from the SRS main harness, then connect Test Harness C only to the cable reel harness.

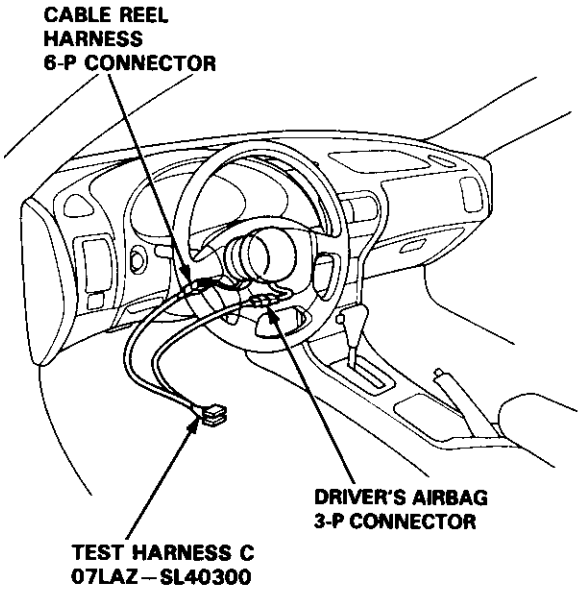

5. Check for continuity between the No. 3 terminal of the 8-P connector of Test Harness C and body ground with the horn switch pressed.
   - If there is continuity, the horn switch is OK.
   - If there is no continuity, go to step 6.

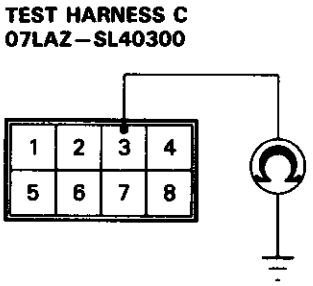

(cont'd)

Switch Test (cont'd)

6. Remove the two TORX® bolts using a TORX® T30 bit, then remove the driver's airbag assembly.

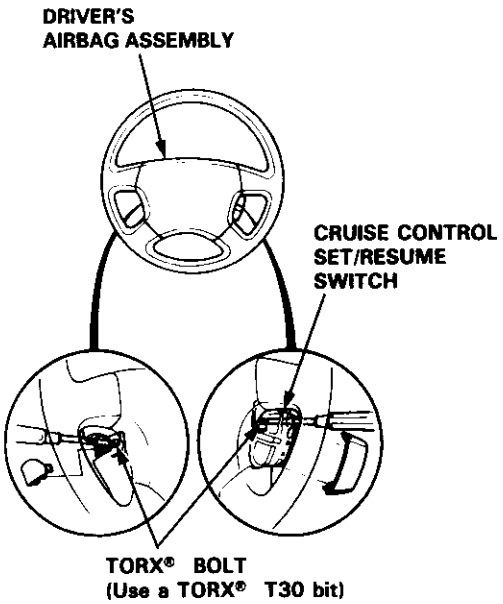

7. Check for continuity between the horn positive terminal and the steering column shaft with the horn switch pressed. There should be no continuity.

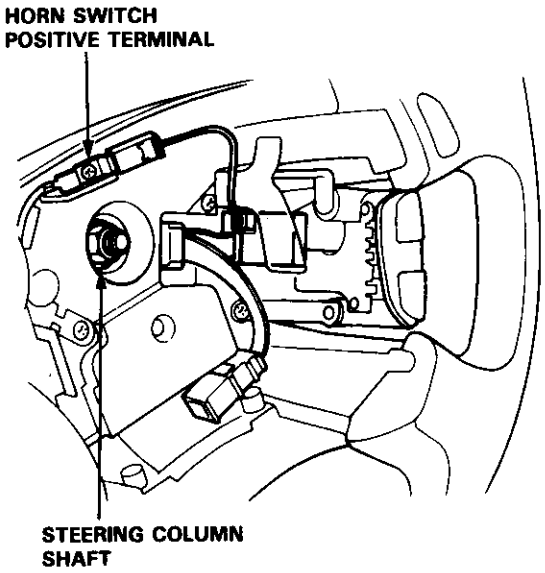

- If there is continuity:
  - With cruise control: Test the set/resume switch. If the switch is OK, replace the cable reel.
  - Without cruise control: Replace the cable reel.
- If there is no continuity, remove the steering wheel and the four screws, then remove the steering wheel cover. Replace the faulty horn switch.

8. Reinstall the steering wheel (see section 17).

Horn Test

1. Remove the front bumper (see page 23-164).
2. Disconnect the 2-P connector from the horn.
3. Remove the horn.

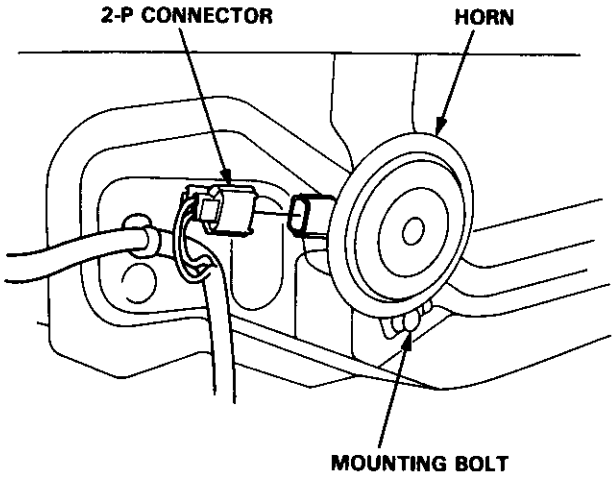

4. Test the horn by connecting battery power to one terminal and grounding the other. The horn should sound.

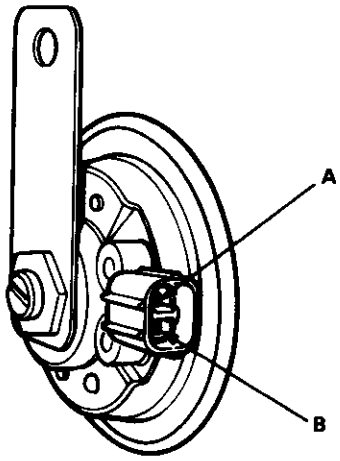

5. Replace the horn if it fails to sound.

Cigarette Lighter

Circuit Diagram

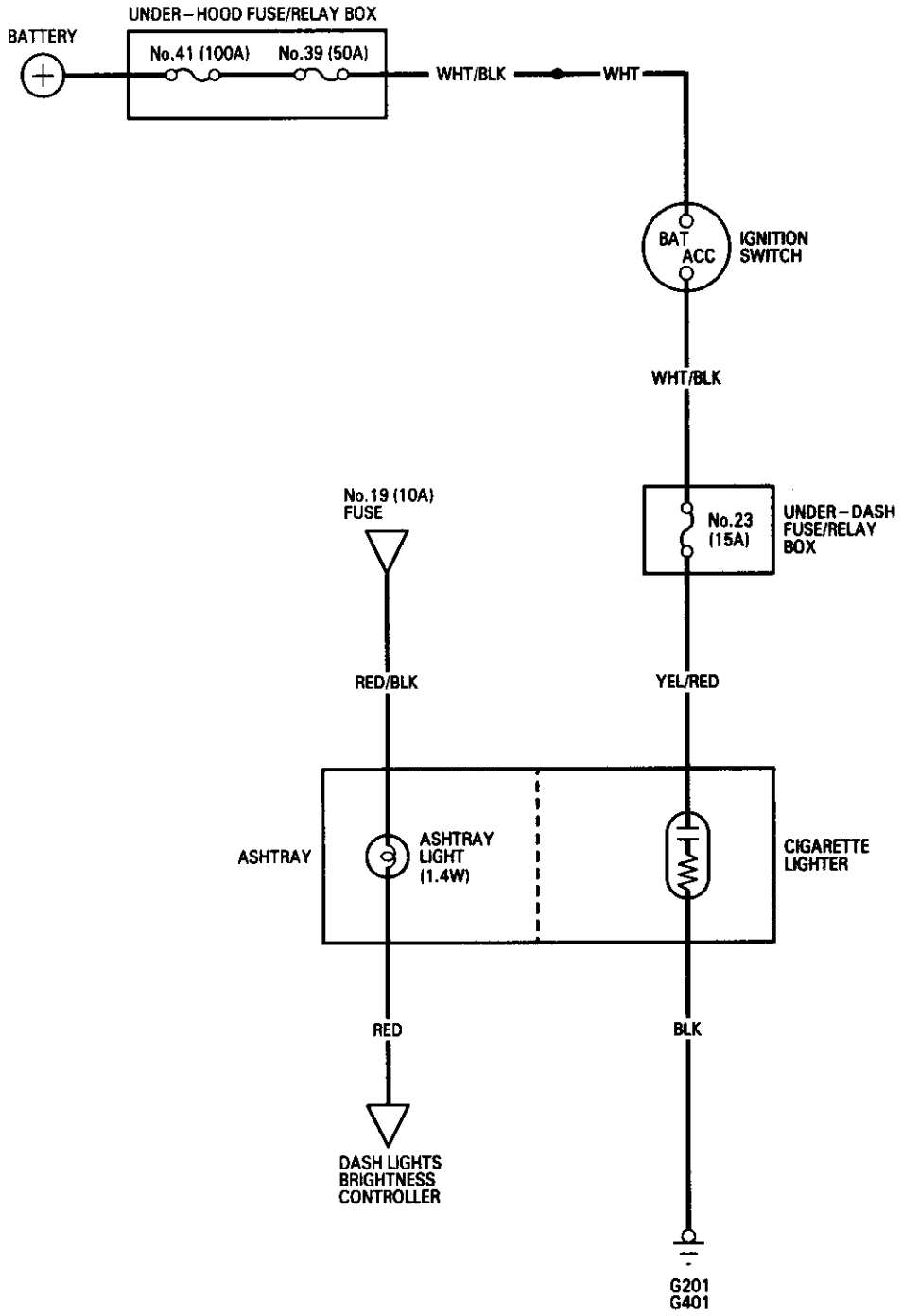

Replacement

CAUTION:
- **All SRS electrical wiring harnesses are covered with yellow insulation.**
- **Before disconnecting any part of the SRS wire harness, connect the short connector(s).**
- **Replace the entire affected SRS harness assembly if it has an open circuit or damaged wiring.**

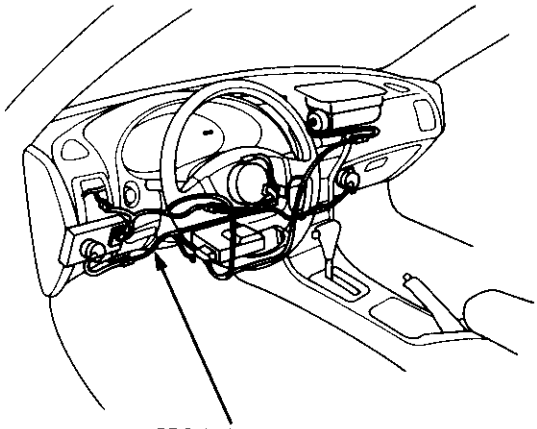

1. Remove the two ashtray mounting screws. Then pull out the ashtray from the front console, and disconnect the 4-P connector.

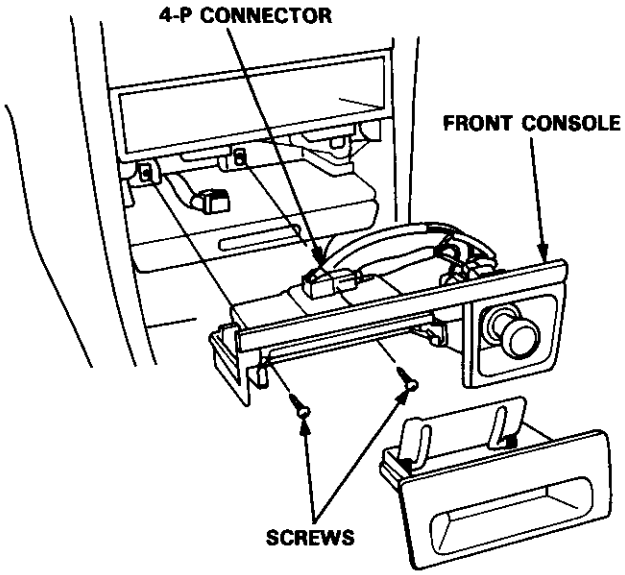

2. Disconnect the thermofuse case from the socket end.

3. Remove the thermal protector, and pull out the cigarette lighter socket.

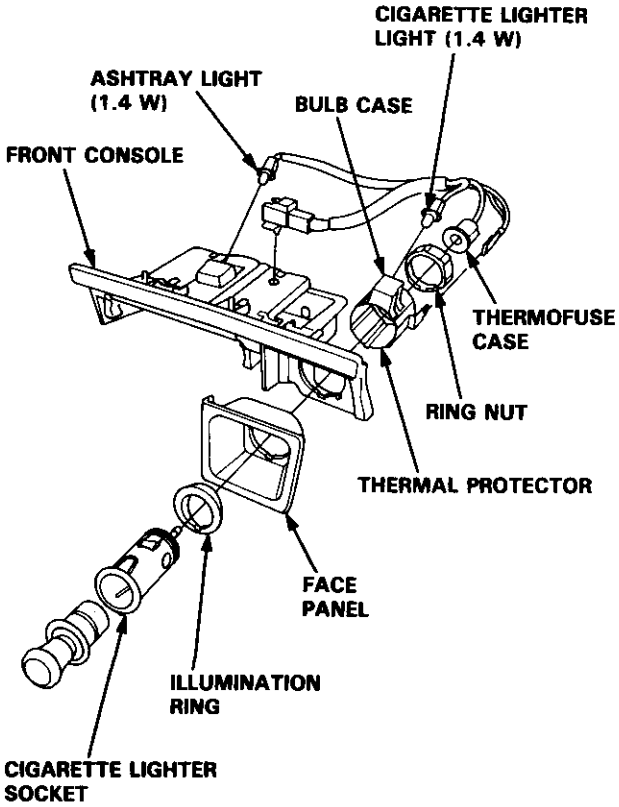

4. When installing the cigarette lighter, align each lug on the face panel, illumination ring, and cigarette lighter socket with the groove of the hole, then position the bulb housing on the thermal protector between the stops in the console panel.

5. Make sure that the ground wire, bulb socket, and thermofuse housing are seated to the cigarette lighter assembly.

Rear Window Defogger

Component Location Index

CAUTION:

- **All SRS electrical wiring harnesses are covered with yellow insulation.**
- **Before disconnecting any part of the SRS wire harness, connect the short connector(s).**
- **Replace the entire affected SRS harness assembly if it has an open circuit or damaged wiring.**

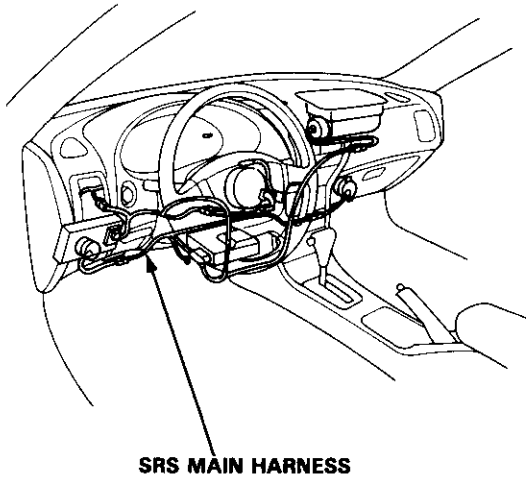

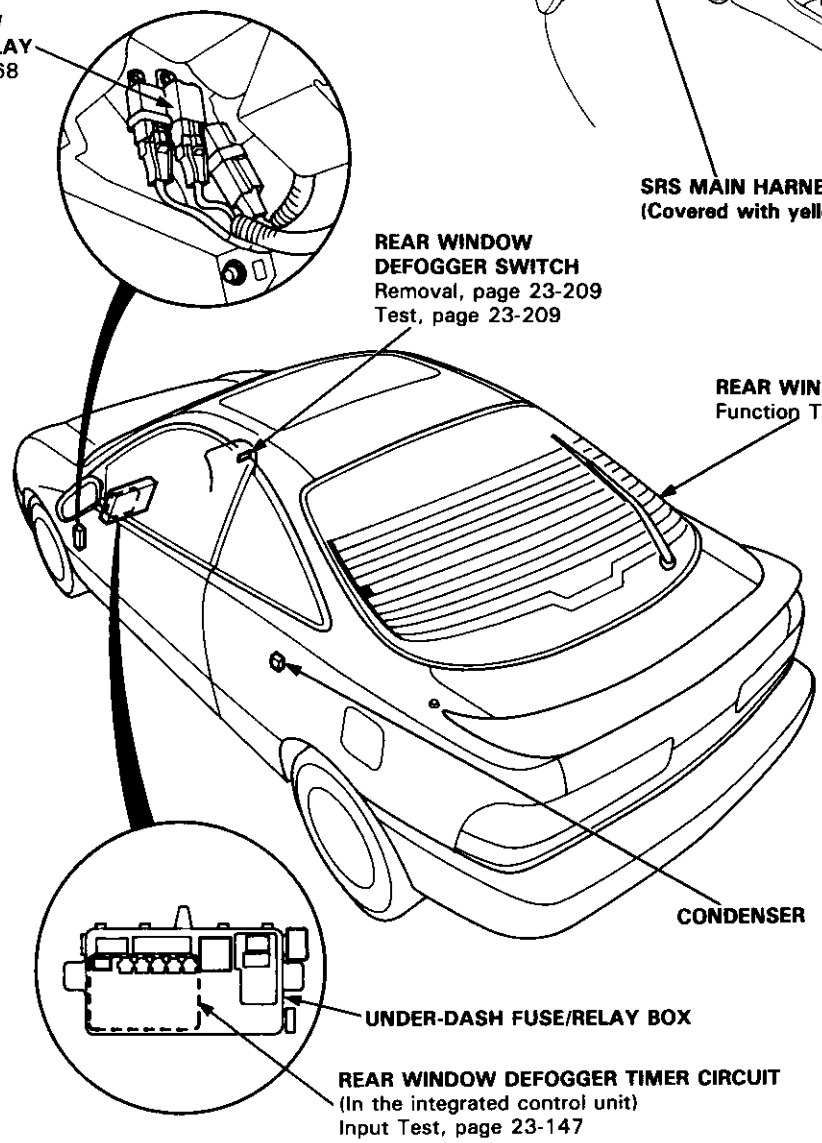

Description

The rear window defogger is controlled by the integrated control unit. Pushing the defogger switch in the instrument panel it sends a signal to the defogger timer in the integrated control unit, and the defogger stays on for 25 minutes or until the ignition switch is turned off. The indicator light in the switch comes on when the defogger works.

Circuit Diagram

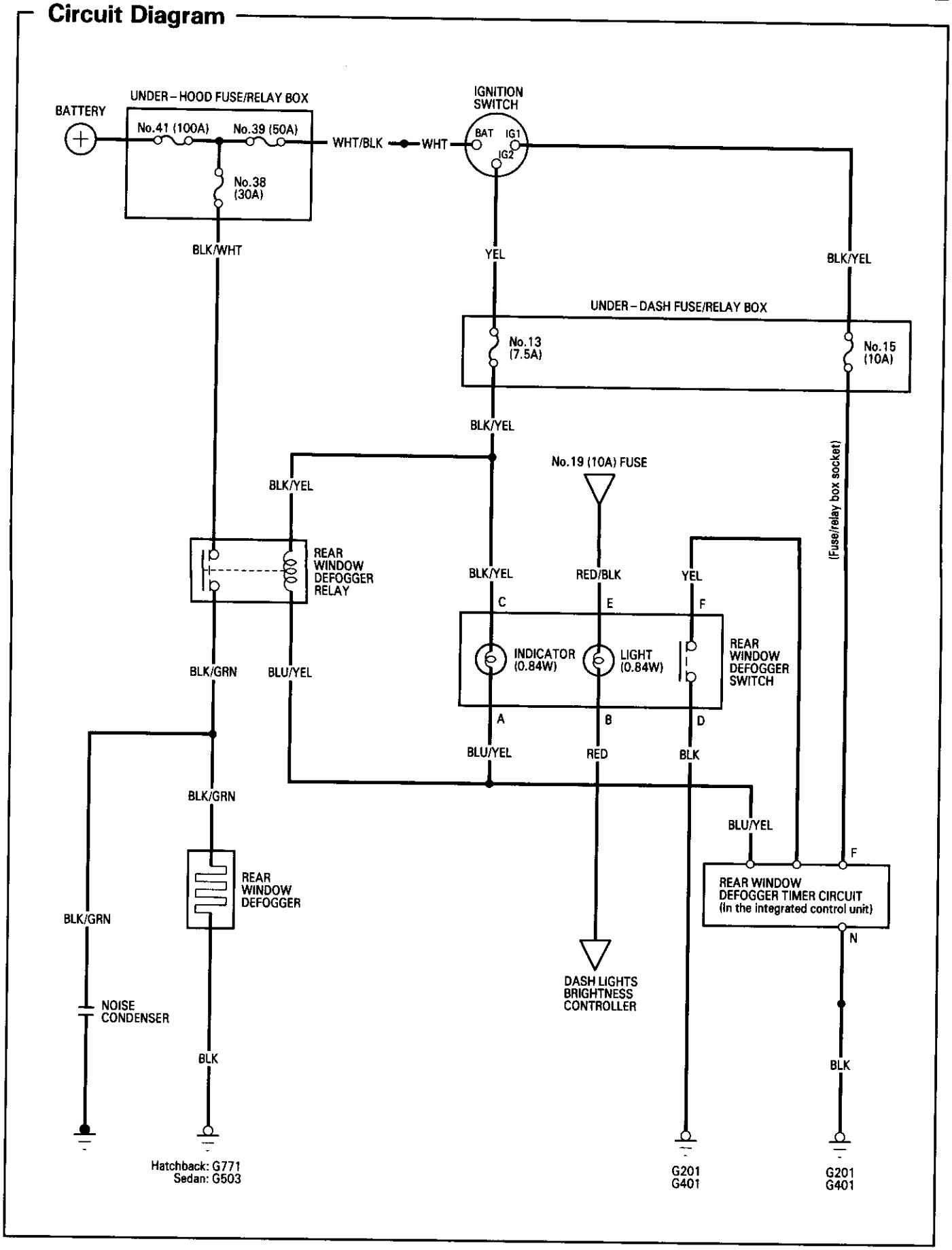

Rear Window Defogger

Troubleshooting

NOTE: The numbers in the table show the troubleshooting sequence.

Symptom \ Item to be inspected	Blown indicator light bulb	Blown No. 13 (7.5 A) fuse (In the under-dash fuse/relay box)	Defogger timer circuit input (In the integrated control unit)	Blown No. 38 (30 A) fuse (In the under-hood fuse/relay box)	Function test	Defogger relay	Defogger switch	Poor ground	Open circuit, loose or disconnected terminals
Defogger works, but indicator light does not go on.	1								BLK/YEL or BLU/YEL
Defogger does not work and indicator light does not go on.		1	3				2	G201 G401	YEL, BLU/YEL or BLK/YEL
Defogger does not work, but indicator light goes on.				1	4	2	3	*1: G771 *2: G503	BLU/YEL or BLK/YEL BLK/GRN or BLK/WHT
Defogger-on time is too long or too short (normal operation time is 25 minutes).			1						

*1: Hatchback
*2: Sedan

Switch Removal

CAUTION: Be careful not to damage the heater control/center air vent.

1. Carefully pry the switch out of the heater control/center air vent.

2. Disconnect the 6-P connector from the switch.

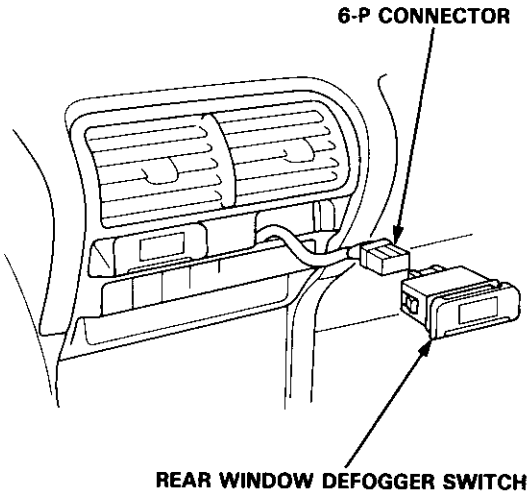

3. Remove the indicator bulb (turn the socket 45° counterclockwise), and remove the illumination bulb.

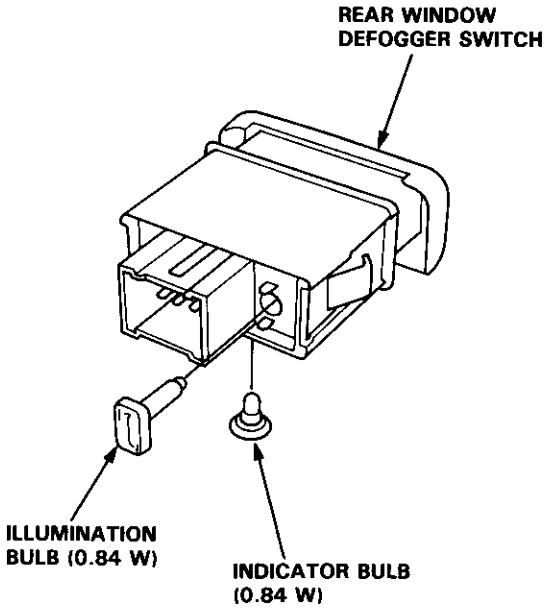

Switch Test

NOTE: Be careful not to damage the heater control/center air vent.

1. Carefully pry the switch out of the heater control/center air vent.

2. Check for continuity between the terminals according to the table.

Terminal / Position	A	B		C	D	E	F
PUSHED	○		⊖	○	○		○
		○	⊖			○	
RELEASED	○		⊖	○			
		○	⊖			○	

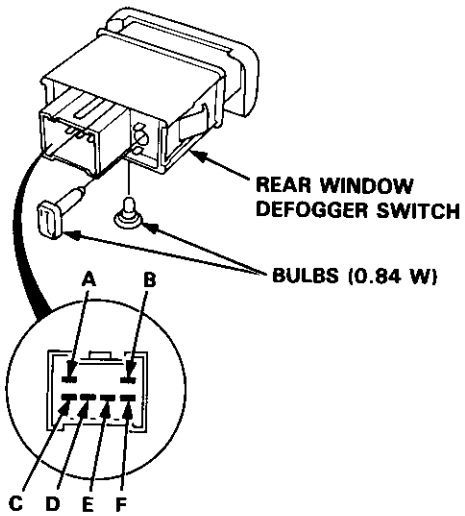

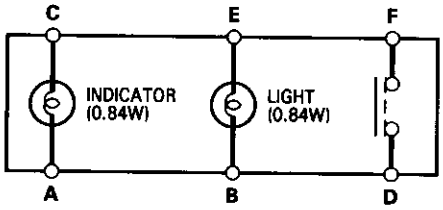

Rear Window Defogger

Function Test

CAUTION: Be careful not to scratch or damage the defogger wires with the tester probe.

1. Check for voltage between the positive terminal and body ground with the ignition switch and the defogger switch ON. There should be battery voltage.

   - If there is no voltage, check for
     - faulty defogger relay.
     - faulty defogger switch.
     - faulty integrated control unit.
     - an open in the BLK/GRN wire.

   - If there is battery voltage, go to step 2.

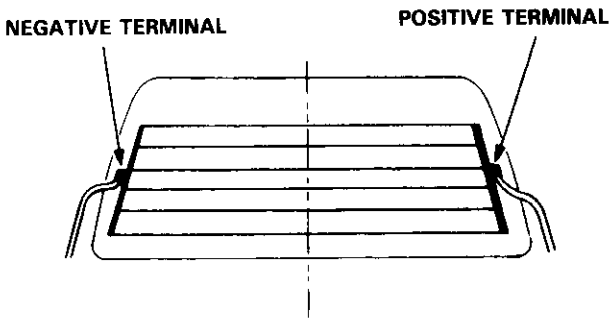

2. Turn the rear window defogger switch OFF. Check for continuity between the negative terminal and body ground.
   - If there is no continuity, check for an open in the defogger ground wire.
   - If there is continuity, go to step 3.

3. Touch the voltmeter positive lead to the halfway point of each defogger wire, and the negative lead to the negative terminal.
   There should be approximately 6 V with the ignition switch and defogger switch ON.

   - If the voltage is as specified, the defogger wire is OK.

   - If the voltage is not as specified, repair the defogger wire:
     - If it is more than 6 V, look for the damage on the negative half on the grid.
     - If it is less than 6 V, look for the damage on the positive half of the grid.

Defogger Wires Repair

NOTE: To make an effective repair, the broken section must be no longer than one inch.

1. Lightly rub the area around the break with fine steel wool, then clean it with alcohol.

2. Carefully mask above and below the broken portion of the defogger wire with cellophane tape.

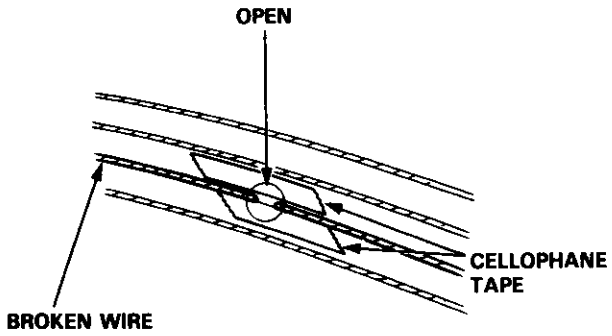

3. Using a small brush, apply a heavy coat of silver conductive paint extending about 3 mm (1/8 in) on both sides of the break. Allow 30 minutes to dry.

   NOTE: Thoroughly mix the paint before use.

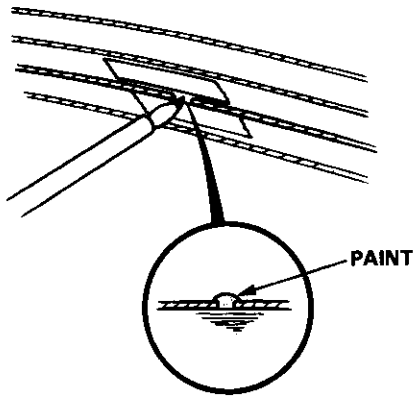

4. Check for continuity in the repaired wire.

5. Apply a second coat of paint in the same way. Let it dry three hours before removing the tape.

Component Location Index

CAUTION:

- **All SRS electrical wiring harnesses are covered with yellow insulation.**
- **Before disconnecting any part of the SRS wire harness, connect the short connector(s).**
- **Replace the entire affected SRS harness assembly if it has an open circuit or damaged wiring.**

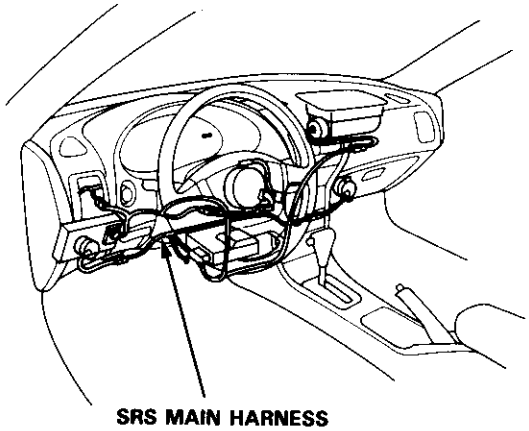

SRS MAIN HARNESS
(Covered with yellow insulation)

MOONROOF SWITCH
Removal, page 23-214
Test, page 23-215

MOONROOF MOTOR
Test, page 23-215
Replacement, section 20

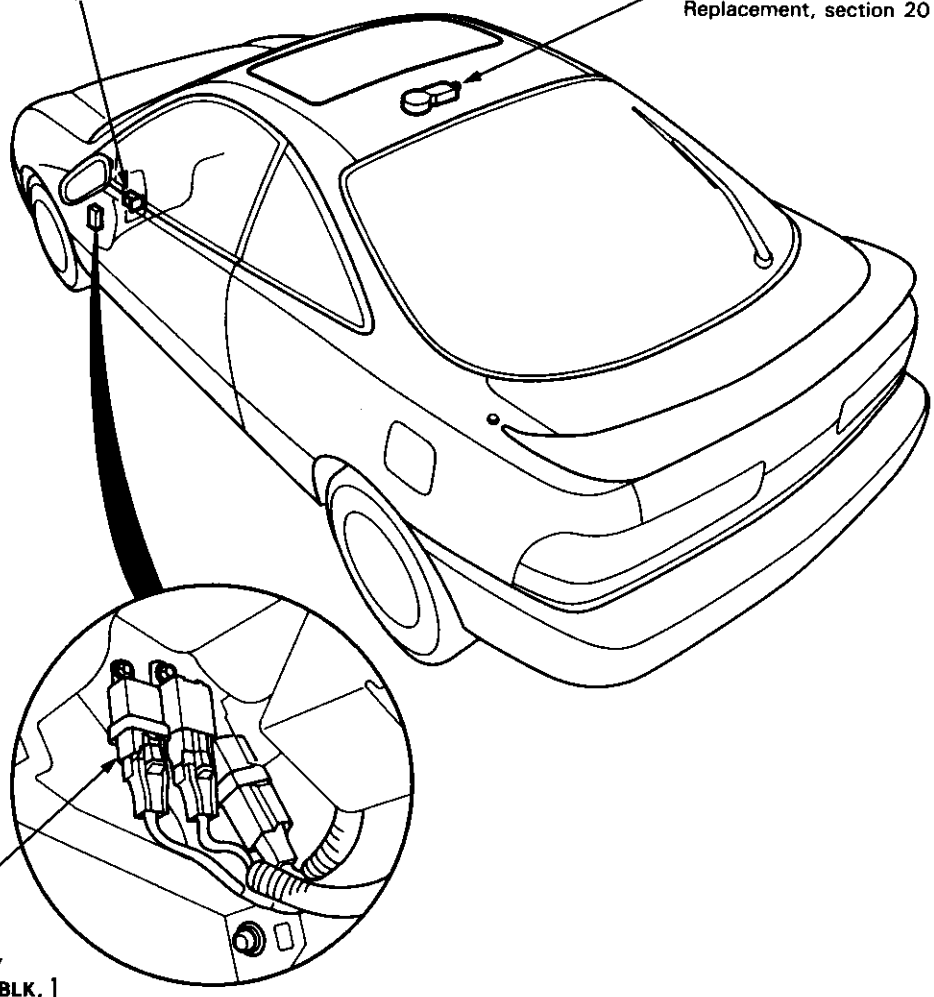

MOONROOF RELAY
[**Wire colors: GRN/BLK, *WHT, GRN and BLK***]
Test, page 23-68

Circuit Diagram

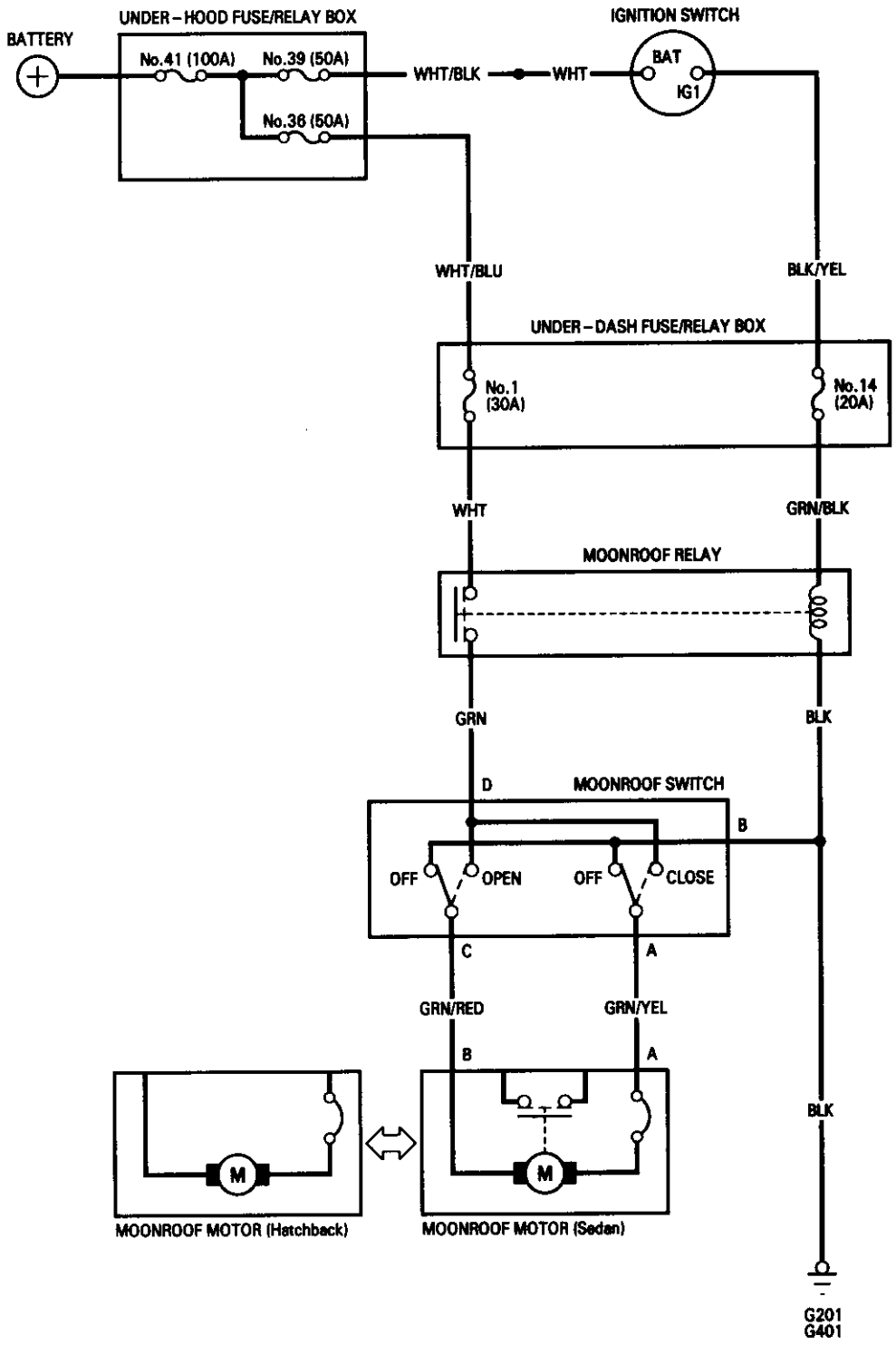

Electrical Troubleshooting

NOTE: The numbers in the table show the troubleshooting sequence.

Symptom \ Item to be inspected		Clutch out of adjustment, foreign matter stuck between guide rail and moonroof, or outer cable not attached properly	Blown No. 1 (30 A) fuse (In the under-dash fuse/relay box)	Blown No. 14 (20 A) fuse (In the under-dash fuse/relay box)	Moonroof switch	Function test	Moonroof relay	Moonroof motor	Poor ground	Open circuit, loose or disconnected terminals
Moonroof does not move, but motor turns.		1								
Moonroof does not move and motor does not turn (moonroof can be moved with moonroof wrench).	In all switch positions		1	2		3	4	5	G201 G401	WHT, GRN/BLK, GRN,BLK
	With OPEN switch				1		2			GRN/RED
	With CLOSE switch				1		2			GRN/YEL

Function Test

1. Remove the dashboard lower cover, and if necessary, remove the knee bolster.

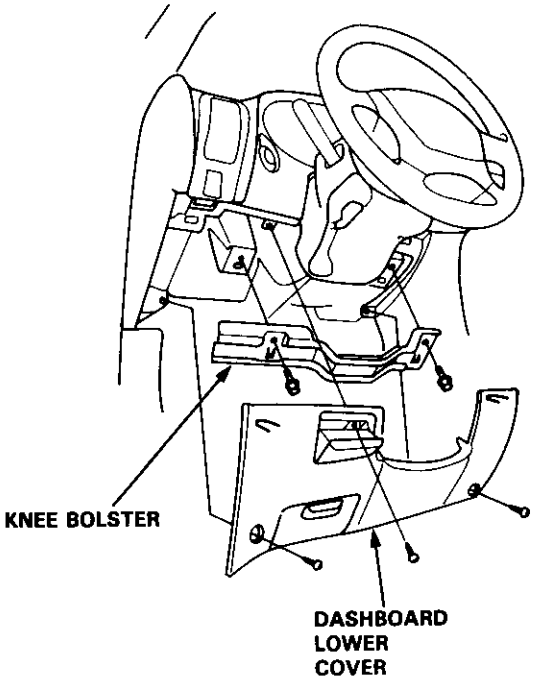

2. Carefully pry the switch out of the left side air vent panel, then disconnect the 4-P connector to remove the switch.

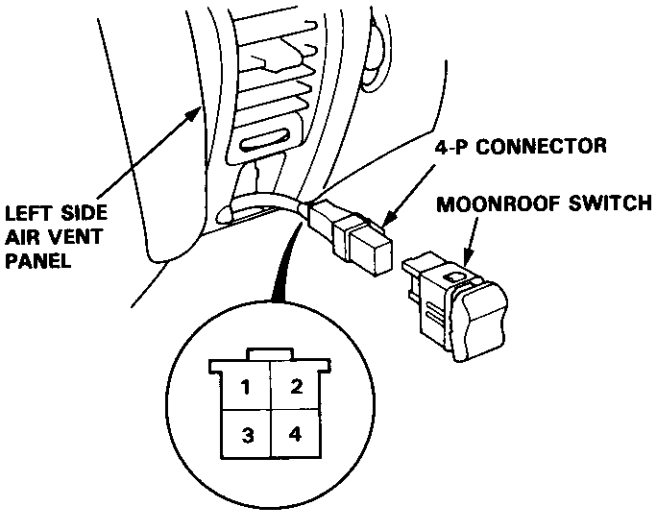

View from wire side

3. Check for continuity between the No. 2 terminal and body ground.

   - If there is no continuity, check for
     - an open in the BLK wire.
     - poor ground (G201, G401).
   - If there is continuity, go to step 4.

4. Check for voltage between the No. 4 terminal (+) and No. 2 terminal (−) with the ignition switch ON (II). There should be battery voltage.

   - If there is no battery voltage, check for
     - blown No. 1 (30 A) or No. 14 (20 A) fuse in the under-dash fuse/relay box.
     - an open in the wires (GRN/BLK, GRN, WHT) or loose terminals.
     - faulty moonroof relay.
   - If there is battery voltage, go to step 5.

5. Connect the No. 4 terminal to the No. 3 terminal, and the No. 1 terminal to the No. 2 terminal with jumper wires. The moonroof should open when the ignition switch is turned ON (II).

   - If the moonroof opens, check the moonroof switch.
   - If it doesn't open, remove the headliner and check the motor.

Switch Test

1. Remove the dashboard lower cover.
2. Carefully pry the switch out of the left side air vent panel, then disconnect the 4-P connector and remove the switch.
3. Check for continuity between the terminals in each switch position according to the table.

Position \ Terminal	A	B	C	D
OFF	○	○	○	
OPEN	○	○	○	○
CLOSE	○	○	○	○

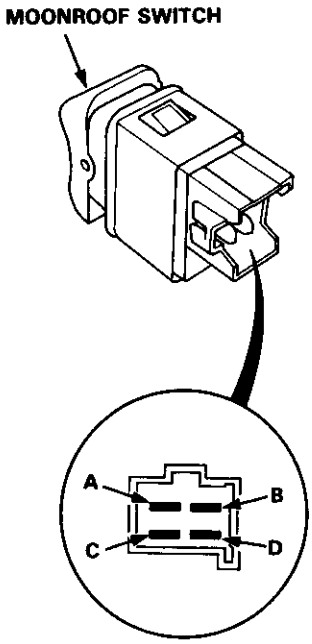

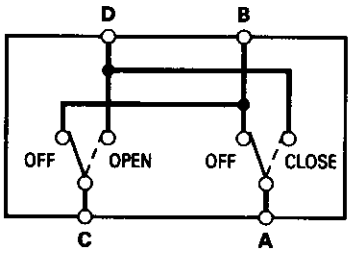

Motor Test

1. Remove the headliner (see section 20).
2. Disconnect the 2-P connector from the moonroof motor.
3. Check the motor by connecting power and ground according to the table.

   NOTE: Motor clutch test is in section 20.

Condition \ Terminal	A	B
OPEN	⊖	⊕
CLOSE	⊕	⊖

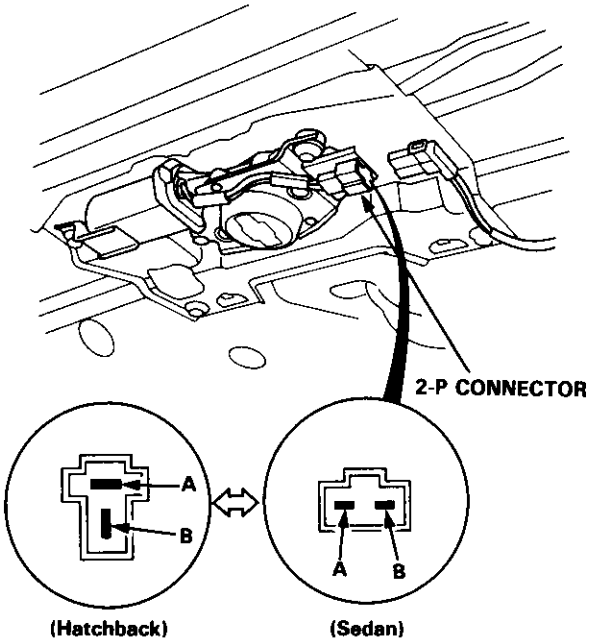

View from terminal side

4. If the motor fails to run or doesn't run smoothly, replace it.

Power Mirrors

Component Location Index

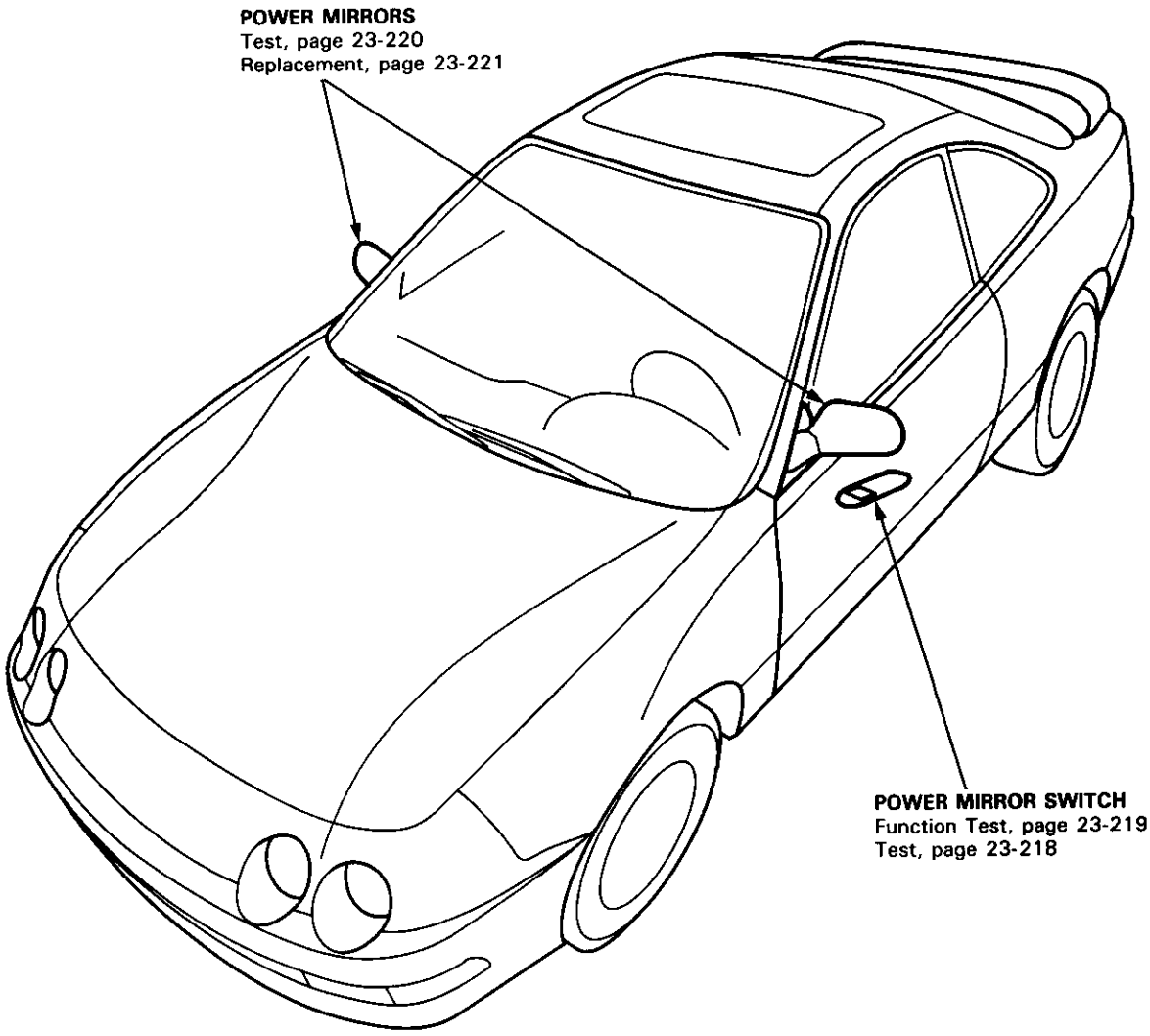

Circuit Diagram

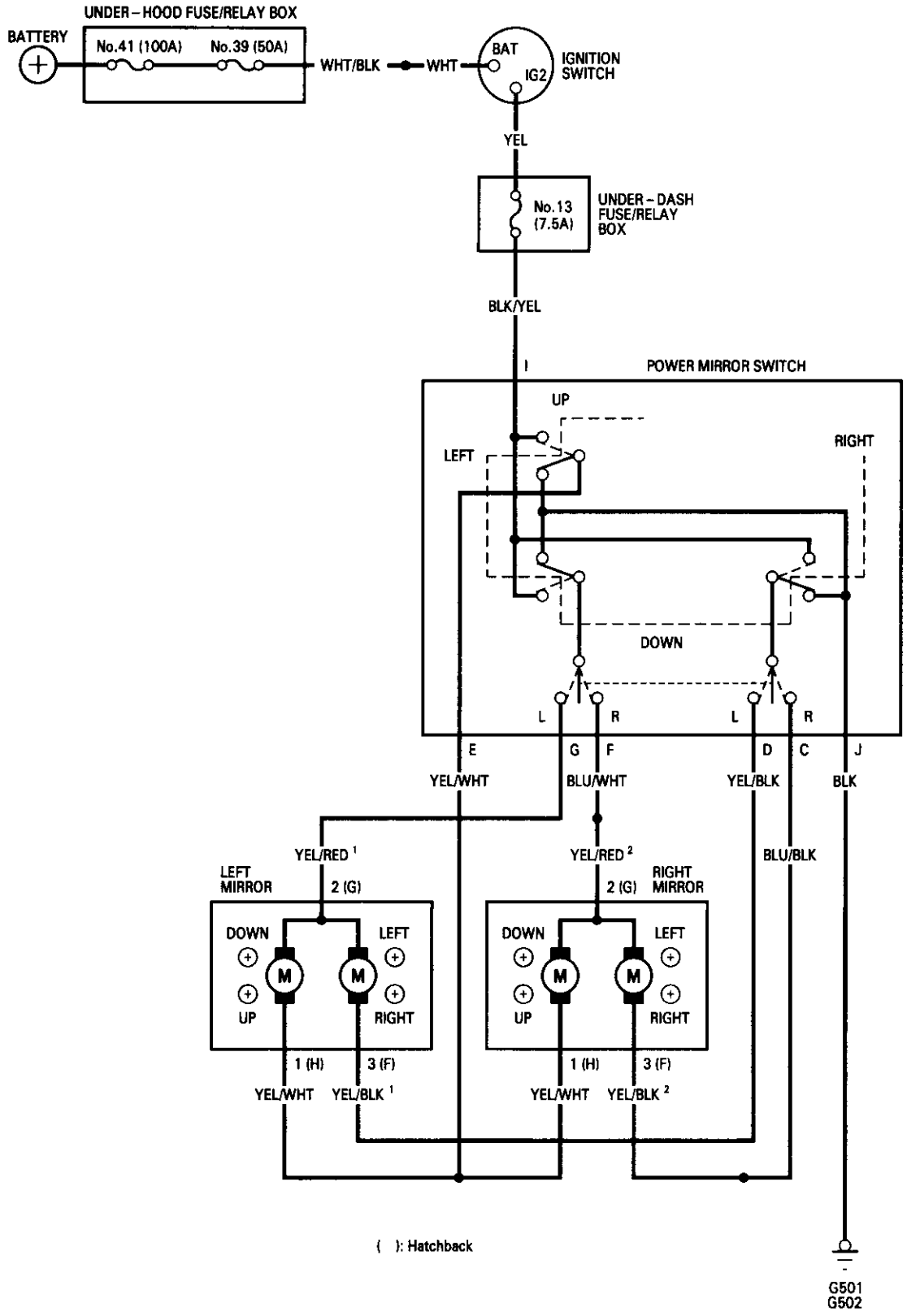

Switch Test

1. Remove the driver's door panel (see section 20).
2. Check for continuity between the terminals in each switch position according to the table.

Mirror Switch

	Position \ Terminal	I	J	E	D	G	C	F
R	OFF		○	○			○	○
	UP	○		○				
			○				○	○
	DOWN	○					○	○
			○	○				
	LEFT	○		○				○
			○				○	
	RIGHT	○					○	
			○	○				○
L	OFF		○	○	○	○		
	UP	○		○				
			○		○	○		
	DOWN	○			○	○		
			○	○				
	LEFT	○		○		○		
			○		○			
	RIGHT	○			○			
			○	○		○		

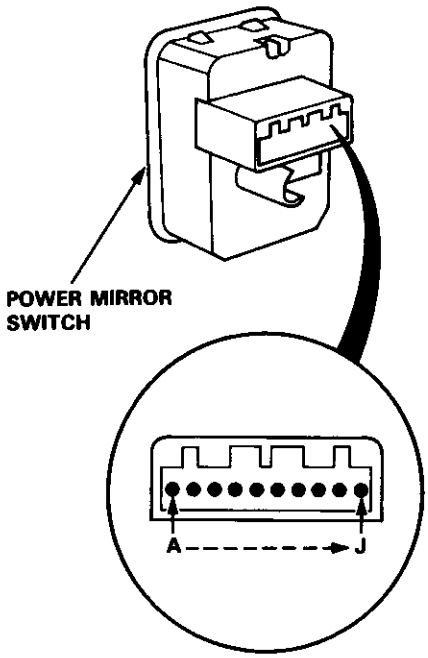

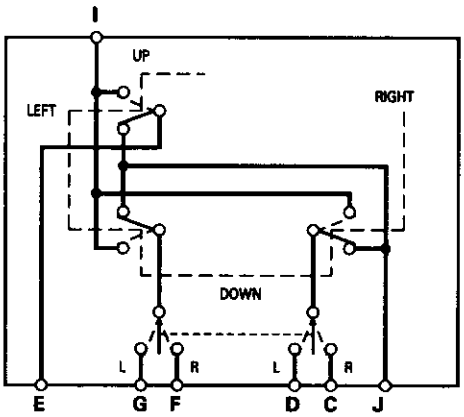

Function Test

NOTE: To test, remove the driver's door panel (see section 20), then disconnect all of the connectors from the door panel.

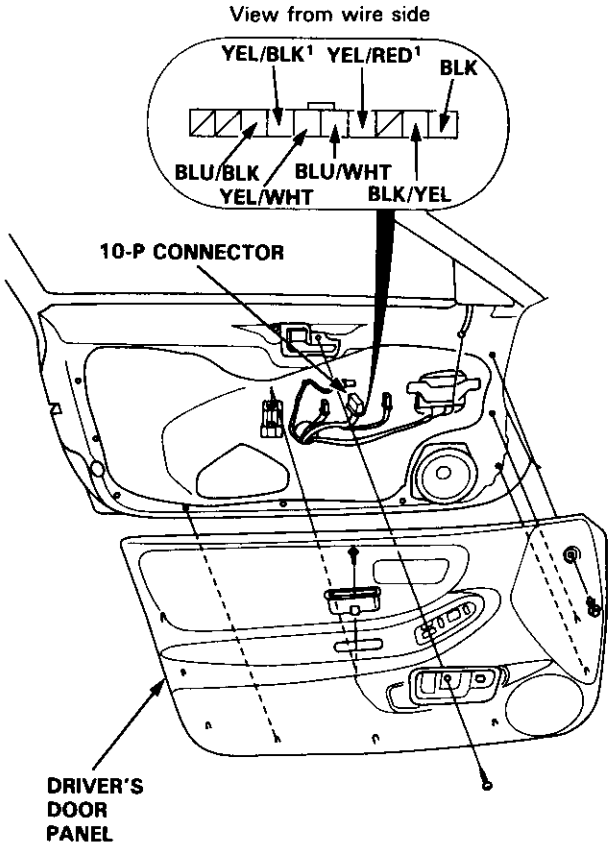

Mirror Test

NOTE: Check the No. 13 (7.5 A) fuse in the under-dash fuse/relay box before testing.

One or both inoperative:

1. Check for voltage between the BLK/YEL terminal and body ground with the ignition switch ON (II).
   There should be battery voltage.
   - If there is no voltage, check for:
     - Blown No. 13 (7.5 A) fuse in the under-dash fuse/relay box
     - An open in the BLK/YEL wire
   - If there is battery voltage, go to step 2.

2. Check for continuity between the BLK terminal and body ground.
   There should be continuity; check for:
   - An open in the BLK wire
   - Poor ground (G501, G502)

Left mirror inoperative:

Connect the BLK/YEL terminal of the 10-P connector to the YEL/RED¹ terminal and the YEL/WHT (or YEL/BLK¹) terminal to body ground with jumper wires.
The left mirror should tilt down (or swing left) when you turn on the ignition switch.

- If the mirror does not tilt down (or does not swing left), check for an open in the YEL/WHT (or YEL/BLK¹) wire between the left mirror and the switch. If the wire is OK, check the left mirror actuator.
- If the mirror neither tilts down nor swings left, repair the YEL/RED¹ wire between the left mirror and the switch.
- If the mirror operates properly, check the mirror switch.

Right mirror inoperative:

Connect the BLK/YEL terminal of the 10-P connector to the BLU/WHT terminal and the YEL/WHT (or BLU/BLK) terminal to body ground with jumper wires.
The right mirror should tilt down (or swing left) when you turn on the ignition switch.

- If the mirror does not tilt down (or does not swing left), remove the right door panel and check for an open in the YEL/WHT (or BLU/BLK) wire between the right mirror and the switch. If the wire is OK, check the right mirror actuator.
- If the mirror neither tilts down nor swings left, repair the BLU/WHT wire between the right mirror and the switch.
- If the mirror operates properly, check the mirror switch.

Door Mirror Test

1. Remove the mirror panel and door panel (Sedan), then disconnect the 8-P (Hatchback) or 3-P (Sedan) connector from the power mirror actuator.

Sedan:

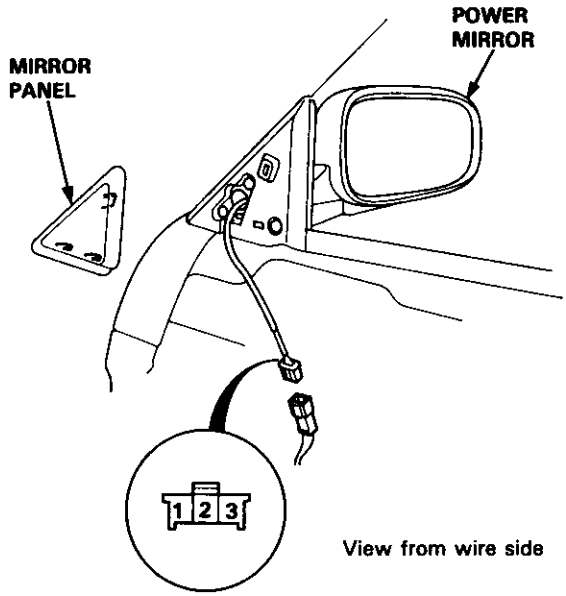

Hatchback:

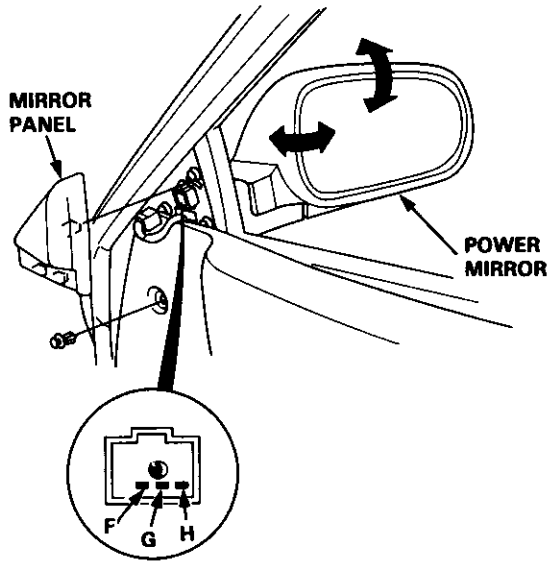

2. Check actuator operation by connecting power and ground according to the table.

TILT:

Position \ Terminal	1(H)	2(G)
UP	⊕	⊖
DOWN	⊖	⊕

SWING:

Position \ Terminal	2(G)	3(F)
LEFT	⊕	⊖
RIGHT	⊖	⊕

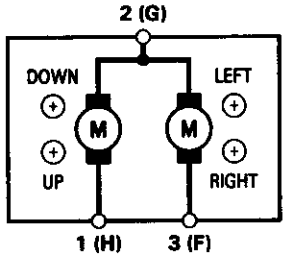

( ) : Hatchback

3. If the mirror fails to operate properly, replace it.

Power Mirror Replacement

1. Carefully pry out the mirror panel with a flat tip screwdriver.

2. Remove the door panel (see section 20).

Hatchback:

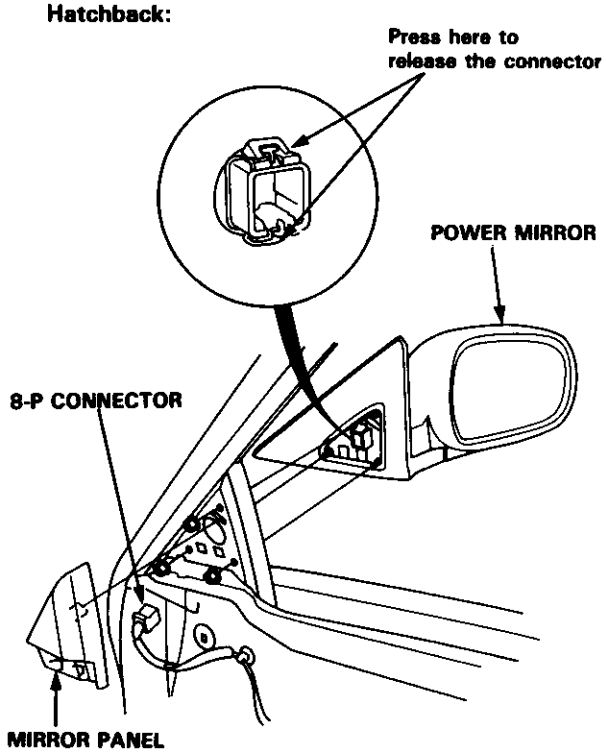

Sedan:

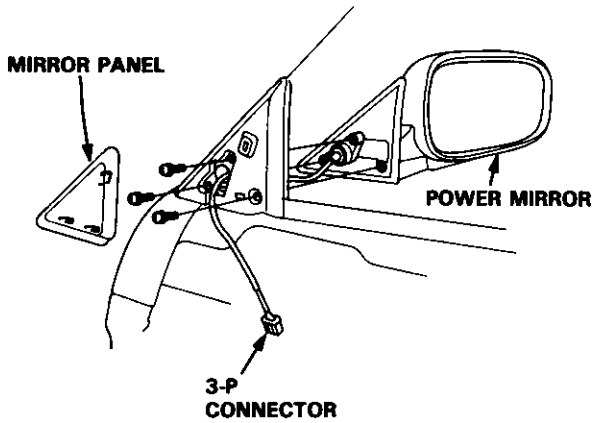

3. Disconnect the 8-P (Hatchback) or 3-P (Sedan) connector from the power mirror actuator.

4. While holding the mirror with one hand, remove its mounting nuts (Hatchback) or mounting screws (Sedan) with the other.

Component Location Index

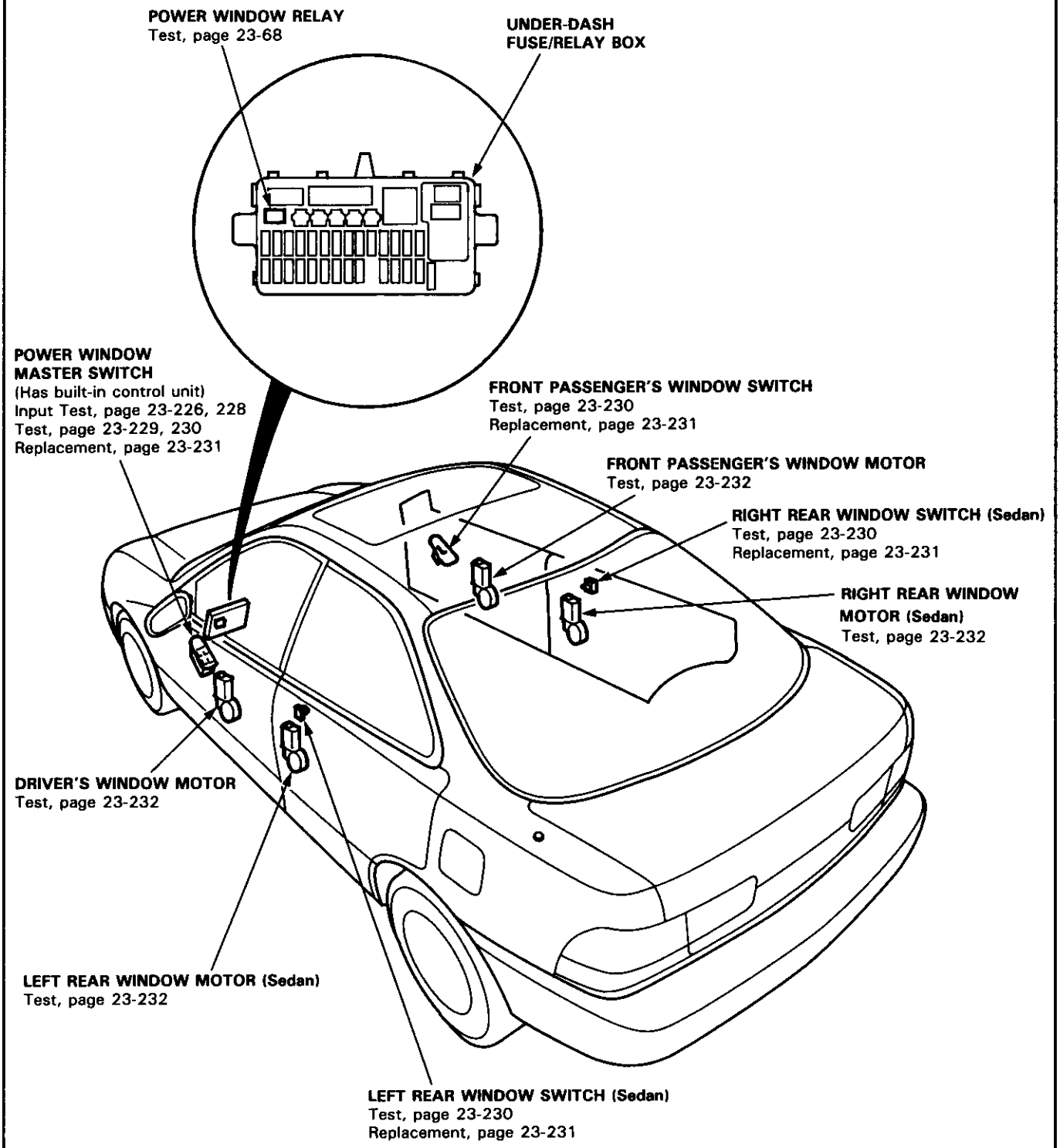

Circuit Diagram (Sedan)

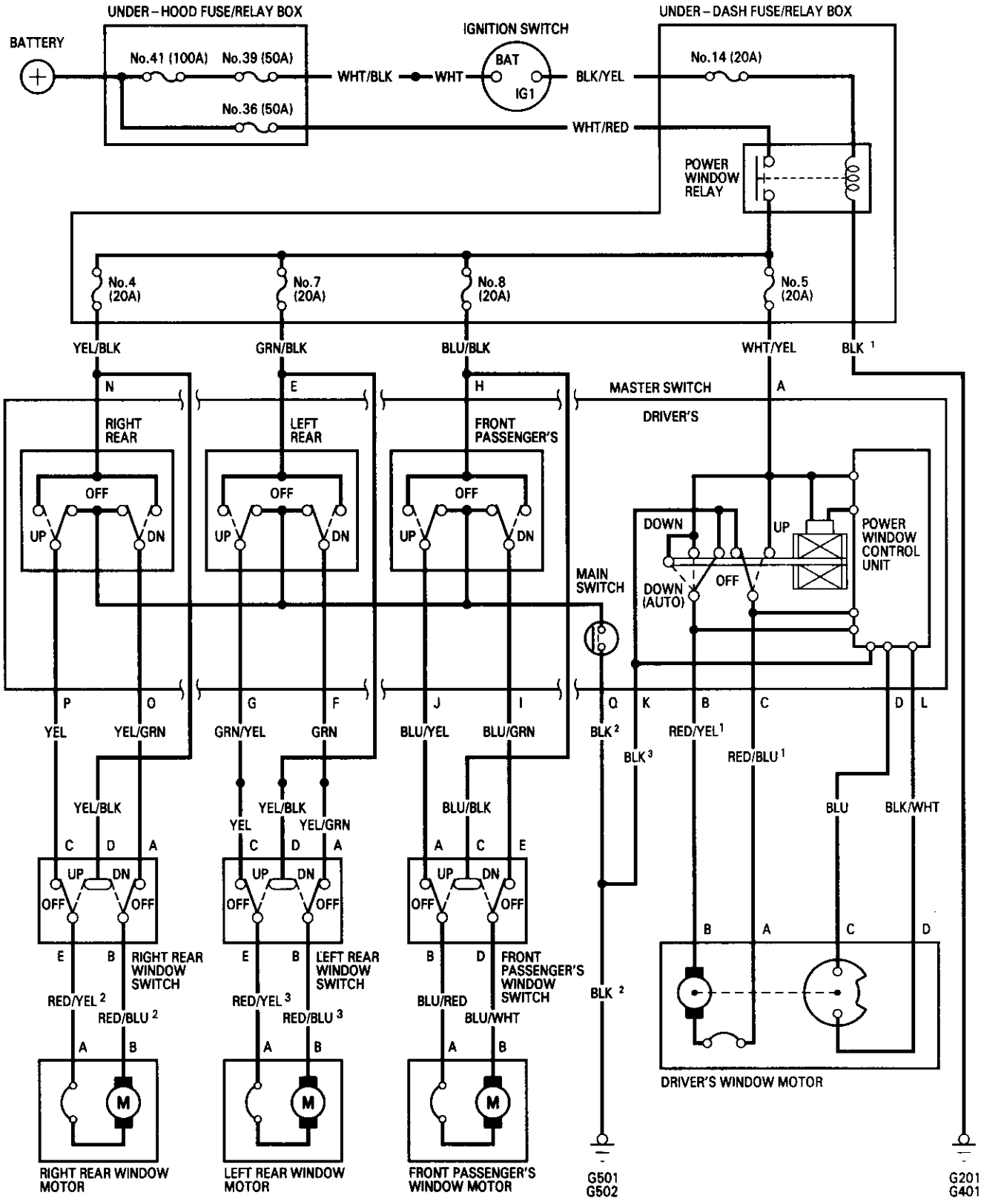

Circuit Diagram (Hatchback)

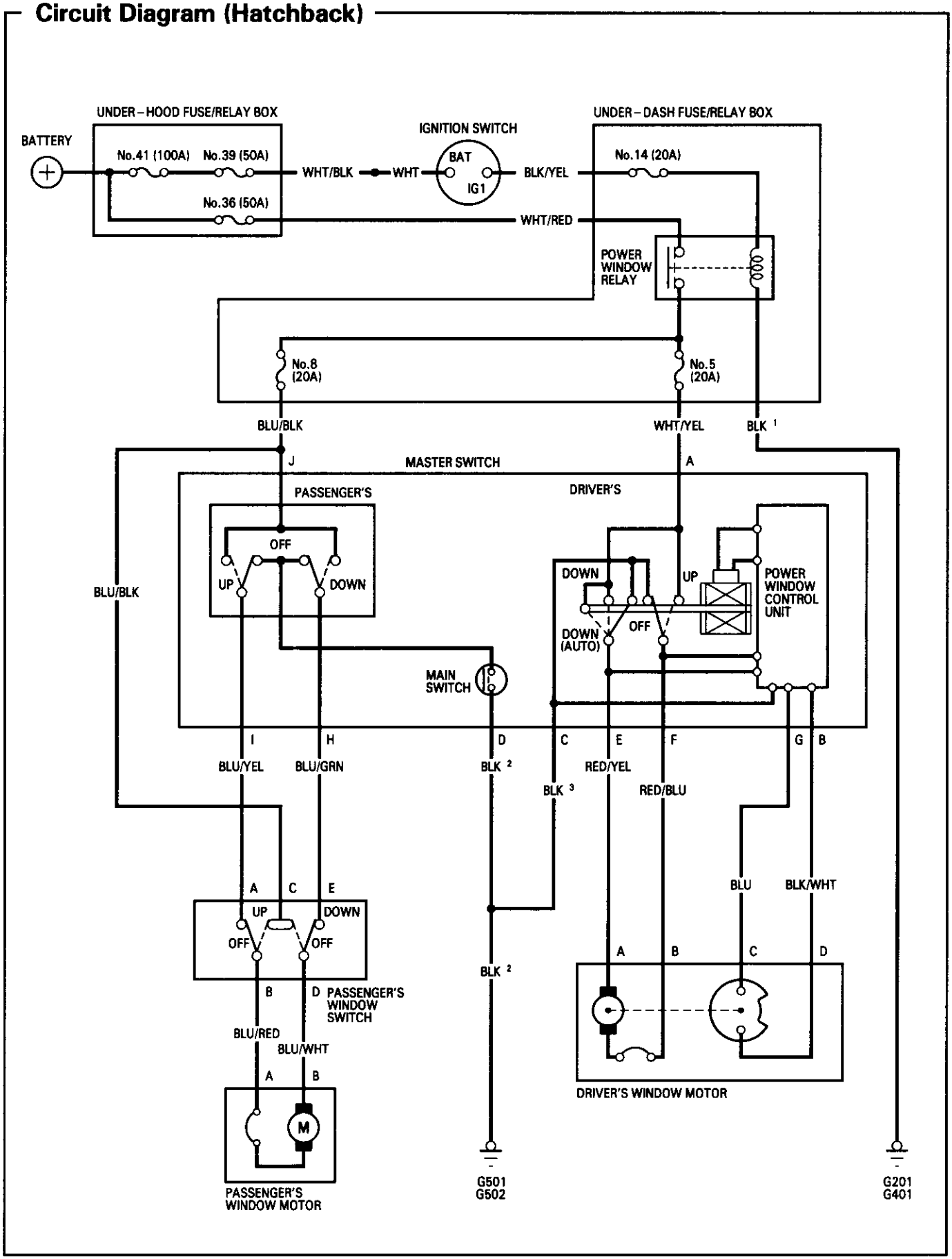

Troubleshooting

NOTE: The numbers in the table show the troubleshooting sequence.

Symptom \ Item to be inspected		Blown No. 14 (20 A) fuse (In the under-dash fuse/relay box)	Power window relay	In the under-dash fuse/relay box: Blown No. 5 (20 A) fuse	Blown No. 8 (20 A) fuse	*Blown No. 4 (20 A) fuse	*Blown No. 7 (20 A) fuse	Power window master switch	Passenger's window switch	Driver's window motor	Pulser (In driver's window motor)	Passenger's window motor	Window regulator	Power window master switch input	Poor ground	Open circuit, loose or disconnected terminals
All windows do not work.		1	2												G201 G401 G501 G502	BLK/YEL WHT/RED
Driver's window does not work.				1				3		2			4	5		WHT/YEL
Driver's window does not work in AUTO.								2			1			3		BLU, BLK/WHT
Passenger's windows do not work.	Right front				1			2	3			4	5			BLU/BLK
	*Left rear						1	2	3			4	5			GRN/BLK
	*Right rear					1		2	3			4	5			YEL/BLK

*: Sedan

Master Switch Input Test (Sedan)

NOTE: The control unit is built into the power window master switch, and only controls driver's door window operations.

1. Remove the driver's door panel and disconnect the 16-P and 1-P connectors from the master switch.

2. Inspect the connector and socket terminals to be sure they are all making good contact.

   - If the terminals are bent, loose or corroded, repair them as necessary, and recheck the system.
   - If the terminals look OK, make the following input tests at the connector.
     - If a test indicates a problem, find and correct the cause, then recheck the system.
     - If all the input tests prove OK, the power window master switch must be faulty; replace it.

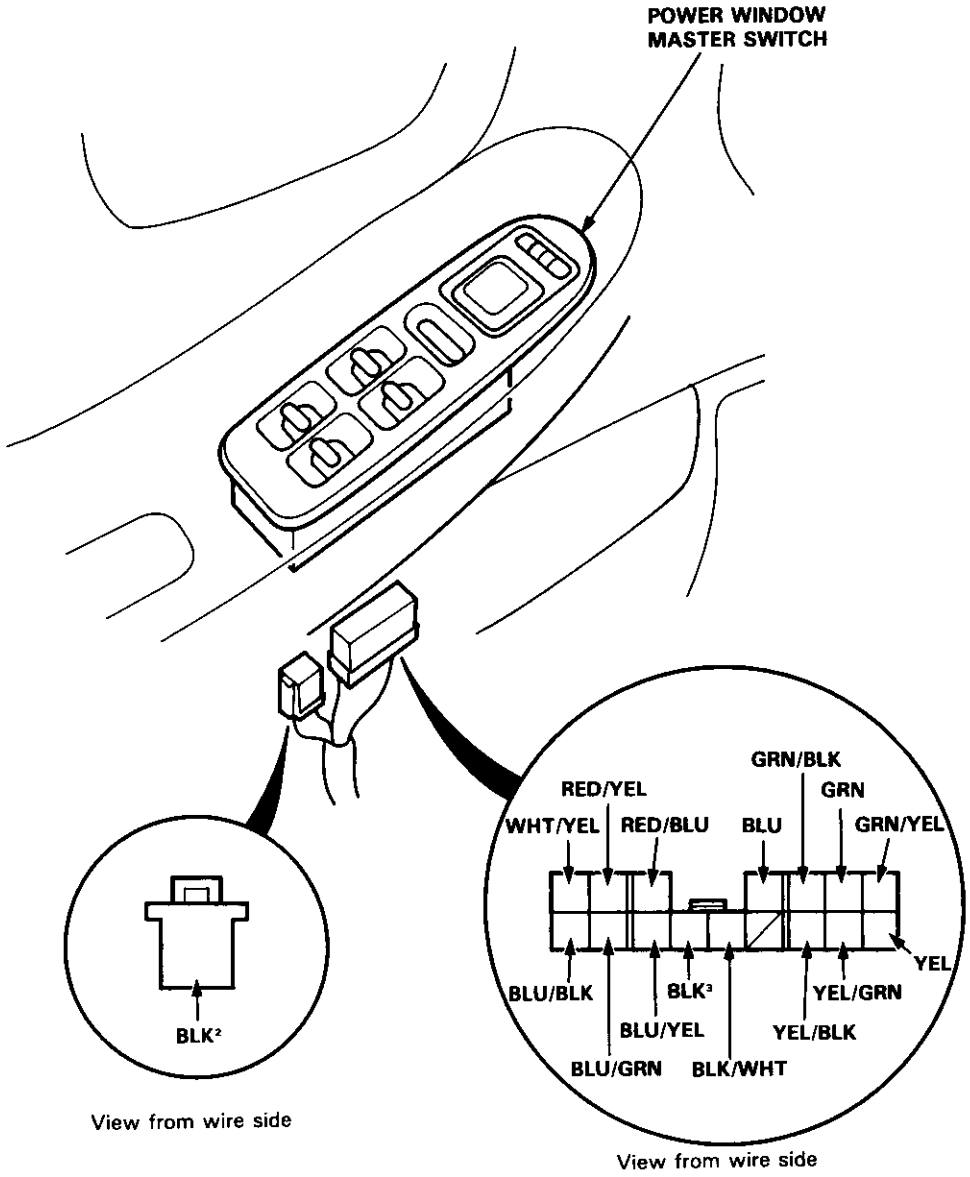

No.	Wire	Test condition	Test: Desired result	Possible cause if result is not obtained
1	BLK[2] and BLK[3]	Under all conditions	Check for continuity to ground: There should be continuity.	• Poor ground (G501, G502) • An open in the wire
2	WHT/YEL BLU/BLK GRN/BLK YEL/BLK	Ignition switch ON (II)	Check for voltage to ground: There should be battery voltage.	• Blown No. 14 (20 A) fuse in the under-dash fuse/relay box • Blown No. 5, 8, 7 or 4 (20 A) fuse in the under-dash fuse/relay box • Faulty power window relay • An open in the wire
3	RED/BLU[1] and RED/YEL[1]	Connect the WHT/YEL and RED/YEL[1] terminals, and the RED/BLU[1] and BLK[3] terminals with jumper wires, then turn the ignition switch ON (II).	Check the driver's window motor: It should run (the window moves down).	• Faulty driver's window motor • An open in the wire
4	BLU/YEL and BLU/GRN	Connect the BLU/BLK and BLU/GRN terminals, and the BLU/YEL and BLK[2] terminals with jumper wires, then turn the ignition switch ON (II).	Check the front passenger's window motor: It should run (the window moves down).	• Faulty front passenger's window motor • An open in the wire
5	GRN/YEL and GRN	Connect the GRN/BLK and GRN terminals, and the GRN/YEL and BLK[2] terminals with jumper wires, then turn the ignition switch ON (II).	Check the left rear window motor: It should run (the window moves down).	• Faulty left rear window motor • Faulty left rear window switch • An open in the wire
6	YEL/GRN and YEL	Connect the YEL/BLK and YEL/GRN terminals, and the YEL and BLK[2] terminals with iumper wires, then turn the ignition switch ON (II).	Check the right rear window motor: It should run (the window moves down).	• Faulty right rear window motor • Faulty right rear window switch • An open in the wire
7	BLU and BLK/WHT	Connect the WHT/YEL and RED/YEL[1] terminals, and the RED/BLU[1] and BLK[3] terminals with jumper wires, then turn the ignition switch ON (II).	Connect an analog ohmmeter to terminals BLU and BLK/WHT: The meter needle should move back and forth alternately as the driver's window motor runs.	• Faulty pulser • Faulty driver's window motor • An open in the wire

Master Switch Input Test (Hatchback)

NOTE: The control unit is built into the power window master switch, and only controls driver's door window operations.

1. Remove the driver's door panel and disconnect the 10-P connector from the master switch.

2. Inspect the connector and socket terminals to be sure they are all making good contact.

   - If the terminals are bent, loose or corroded, repair them as necessary, and recheck the system.
   - If the terminals look OK, make the following input tests at the connector terminals.
     - If a test indicates a problem, find and correct the cause, then recheck the system.
     - If all the input tests prove OK, the power window master switch must be faulty; replace it.

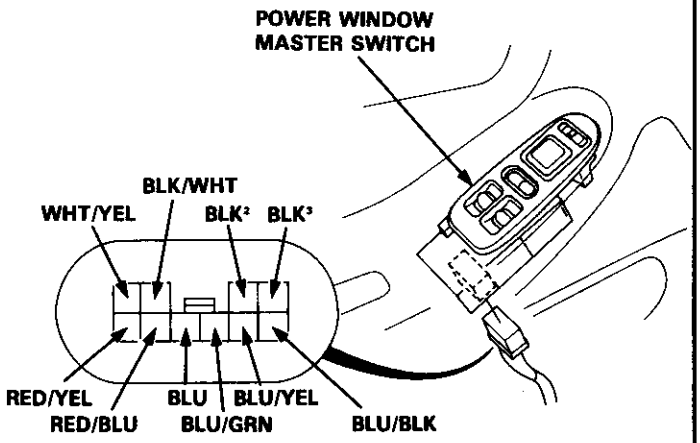

View from wire side

No.	Wire	Test condition	Test: Desired result	Possible cause if result is not obtained
1	BLK² / BLK³	Under all conditions	Check for continuity to ground: There should be continuity.	• Poor ground (G501, G502) • An open in the wire
2	WHT/YEL / BLU/BLK	Ignition switch ON (II)	Check for voltage to ground: There should be battery voltage.	• Blown No. 14 (20 A) fuse in the under-dash fuse/relay box • Blown No. 5, or No. 8 (20 A) fuse in the under-dash fuse/relay box • Faulty power window relay • An open in the wire
3	RED/BLU¹ and RED/YEL¹	Connect the WHT/YEL and RED/YEL¹ terminals, and the RED/BLU¹ and BLK³ terminals with jumper wires, then turn the ignition switch ON (II).	Check the driver's window motor: It should run (the window moves down).	• Faulty driver's window motor • An open in the wire
4	BLU/YEL and BLU/GRN	Connect the BLU/BLK and BLU/GRN terminals, and the BLU/YEL and BLK² terminals with jumper wires, then turn the ignition switch ON (II).	Check the passenger's window motor: It should run (the window moves down).	• Faulty passenger's window motor • An open in the wire
5	BLU and BLK/WHT	Connect the WHT/YEL and RED/YEL¹ terminals, and the RED/BLU¹ and BLK³ terminals with jumper wires, then turn the ignition switch ON (II).	Connect an analog ohmmeter to the BLU and BLK/WHT terminals: The meter needle should move back and forth alternately as the driver's window motor runs.	• Faulty pulser • Faulty driver's window motor • An open in the wire

Master Switch Test (Sedan)

1. Remove the driver's door panel (see section 20).
2. Disconnect the 16-P and 1-P connectors from the switch.
3. Check for continuity between the terminals in each switch position according to the tables.

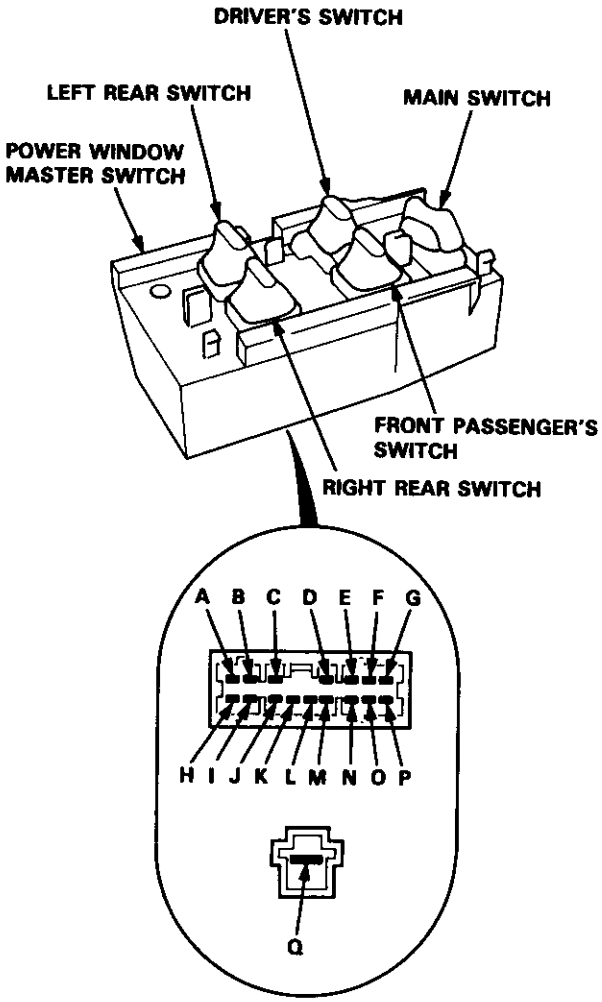

Driver's Switch:
The driver's switch is combined with the control unit so you cannot isolate the switch to test it. Instead , run the master switch input test procedures No. 1, 2, 3, and 7 on page 23-226. If the tests are normal, the driver's switch must be faulty.

Front Passenger's Switch:

Position	Main Switch \ Terminal	H	I	J	Q
OFF	ON		○	○	○
	OFF		○	○	
UP	ON	○		○	
			○		○
	OFF	○		○	
DOWN	ON	○	○		
				○	○
	OFF	○	○		

Left Rear Switch:

Position	Main Switch \ Terminal	E	F	G	Q
OFF	ON		○	○	○
	OFF		○	○	
UP	ON	○		○	
			○		○
	OFF	○		○	
DOWN	ON	○	○		
				○	○
	OFF	○	○		

Right Rear Switch:

Position	Main Switch \ Terminal	N	O	P	Q
OFF	ON		○	○	○
	OFF		○	○	
UP	ON	○		○	
			○		○
	OFF	○		○	
DOWN	ON	○	○		
				○	○
	OFF	○	○		

Power Windows

Master Switch Test (Hatchback)

1. Remove the driver's door panel (see section 20).
2. Disconnect the 10-P connector from the switch.
3. Check for continuity between the terminals in each switch position according to the table.

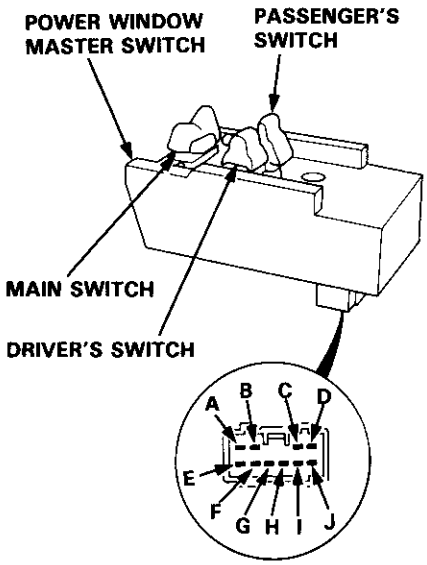

Driver's Switch:
The driver's switch is combined with the control unit so you cannot isolate the switch to test it. Instead , run the master switch input test procedures No. 1, 2, 3, and 5 on page 23-228. If the tests are normal, the driver's switch must be faulty.

Passenger's Switch:

Position \ Main Switch \ Terminal		D	H	I	J
OFF	ON	○	○	○	
	OFF		○	○	
UP	ON	○	○	○	○
	OFF			○	○
DOWN	ON	○	○	○	○
	OFF		○		○

Passenger's Window Switch Test

Front:
1. Remove the passenger's door panel (see section 20).
2. Disconnect the 5-P connector from the switch.
3. Check for continuity between the terminals in each switch position according to the table.

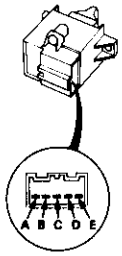

Position \ Terminal	A	B	C	D	E
OFF	○	○		○	○
UP		○	○	○	○
DOWN	○	○	○	○	

Rear (Sedan):
1. Remove the inner handle (see section 20).
2. Disconnect the 5-P connector from the switch.
3. Check for continuity between the terminals in each switch position according to the table.

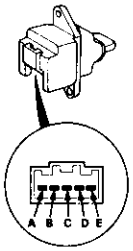

Position \ Terminal	A	B	C	D	E
OFF	○	○	○		○
UP	○	○		○	○
DOWN		○	○	○	○

Master Switch Replacement

Hatchback:

1. Remove the driver's door panel (see section 20).
2. Disconnect the 10-P connector from the switch.
3. Remove the three mounting screws and the switch.

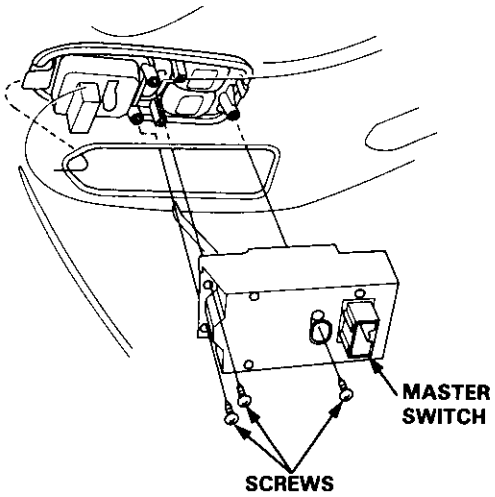

Sedan:

1. Remove the driver's door panel (see section 20).
2. Disconnect the 16-P and 1-P connectors from the switch.
3. Remove the two mounting screws and the switch.

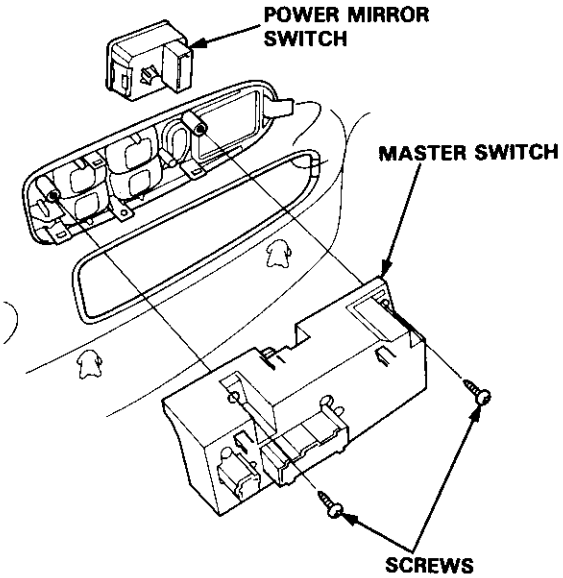

Passenger's Window Switch Replacement

Front:

1. Remove the passenger's door panel (see section 20).
2. Disconnect the 5-P connector from the switch.
3. Remove the two mounting screws and the switch.

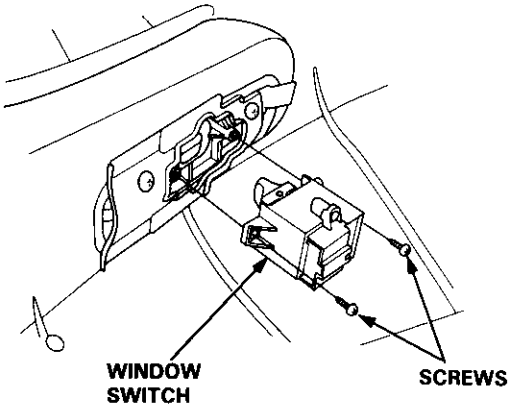

Rear (Sedan):

1. Remove the inner handle (see section 20).
2. Disconnect the 5-P connector from the switch.
3. Remove the two mounting screws and the switch.

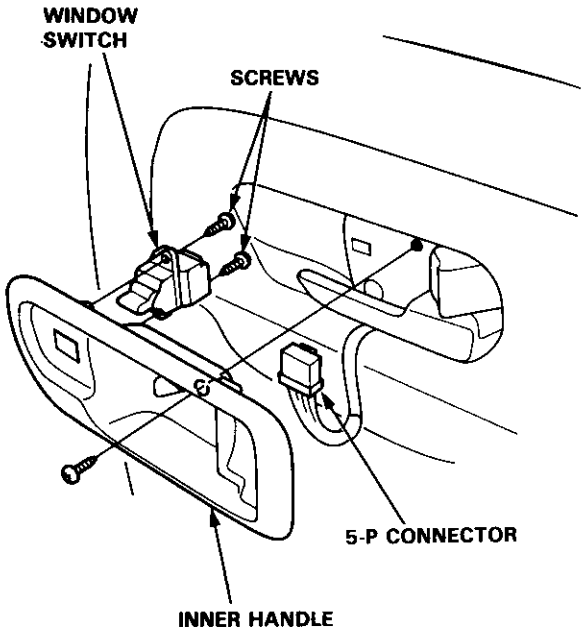

Power Windows

Driver's Window Motor Test

Motor Test:

1. Remove the driver's door panel (see section 20).
2. Disconnect the 4-P connector from the motor.

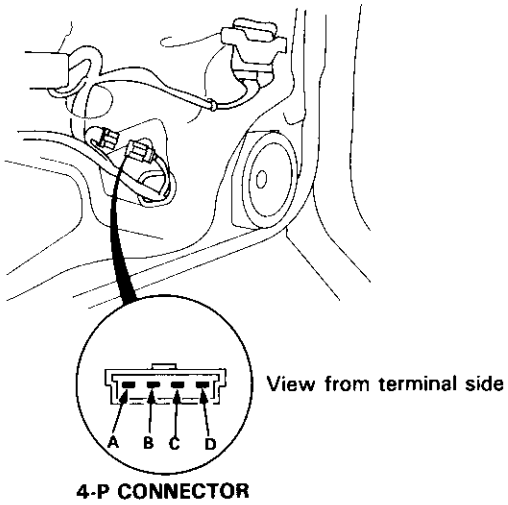

3. Test the motor in each direction by connecting battery power and ground according to the table.

Terminal / Direction	A (B)	B (A)
UP	⊖	⊕
DOWN	⊕	⊖

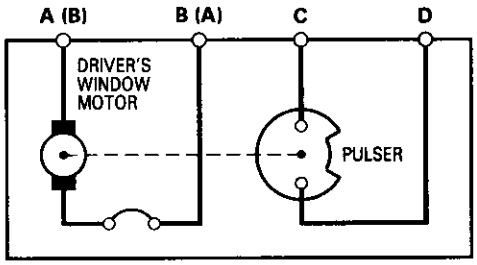

( ): Sedan

CAUTION: When the motor stops running, disconnect one lead immediately.

4. If the motor does not run or fails to run smoothly, replace it.

Pulser Test:

5. Connect the test leads of an analog ohmmeter to the C and D terminals.
6. Run the motor by connecting power and ground to the A and B terminals.
   The ohmmeter needle should move back and forth alternately.

Passenger's Window Motor Test

1. Remove the passenger's door panel (see section 20).
2. Disconnect the 2-P connector from the motor.

   NOTE:
   - Front passenger's door is symmetrical to driver's door.
   - The illustration shows the right rear door, left rear door is symmetrical.

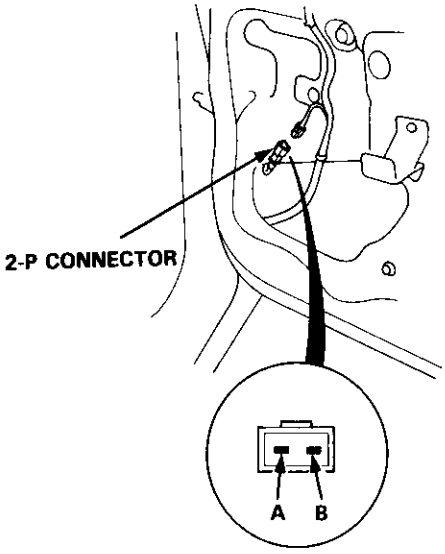

View from terminal side

3. Test the motor in each direction by connecting battery power and ground according to the table.

Terminal / Direction	B	A
UP	⊖	⊕
DOWN	⊕	⊖

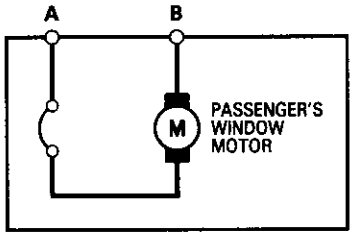

CAUTION: When the motor stops running, disconnect one lead immediately.

4. If the motor does not run or fails to run smoothly, replace it.

Power Door Locks

Component Location Index

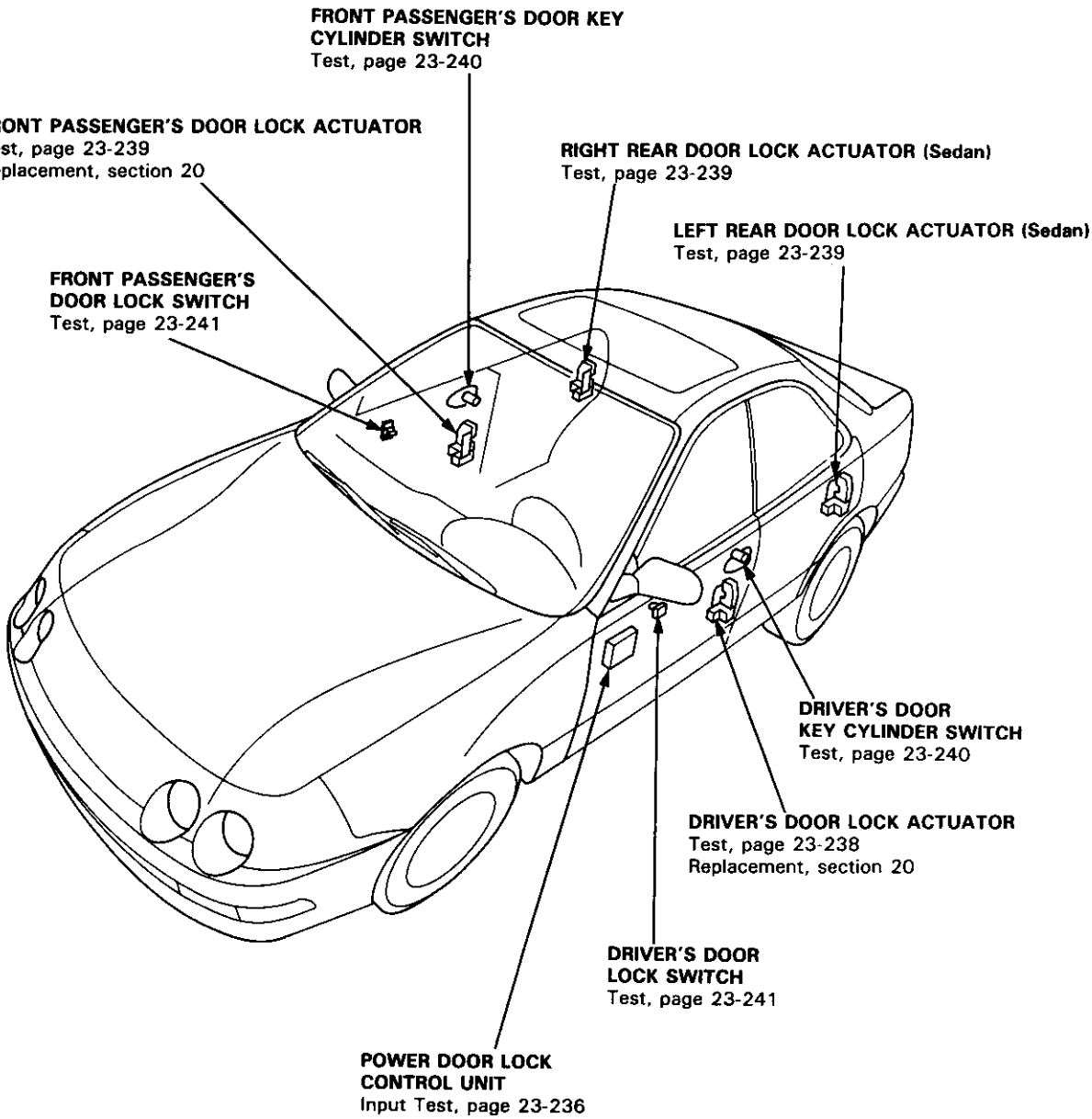

Description

For this model, a new door lock system has been adopted to improve convenience and safety. If the key is inserted into the driver's door key cylinder, turned to the unlock position, and pulled out immediately thereafter, ONLY the driver's door will unlock. However, if the key is kept in the unlock position for one second or more, ALL doors will unlock.

Power Door Locks

Circuit Diagram

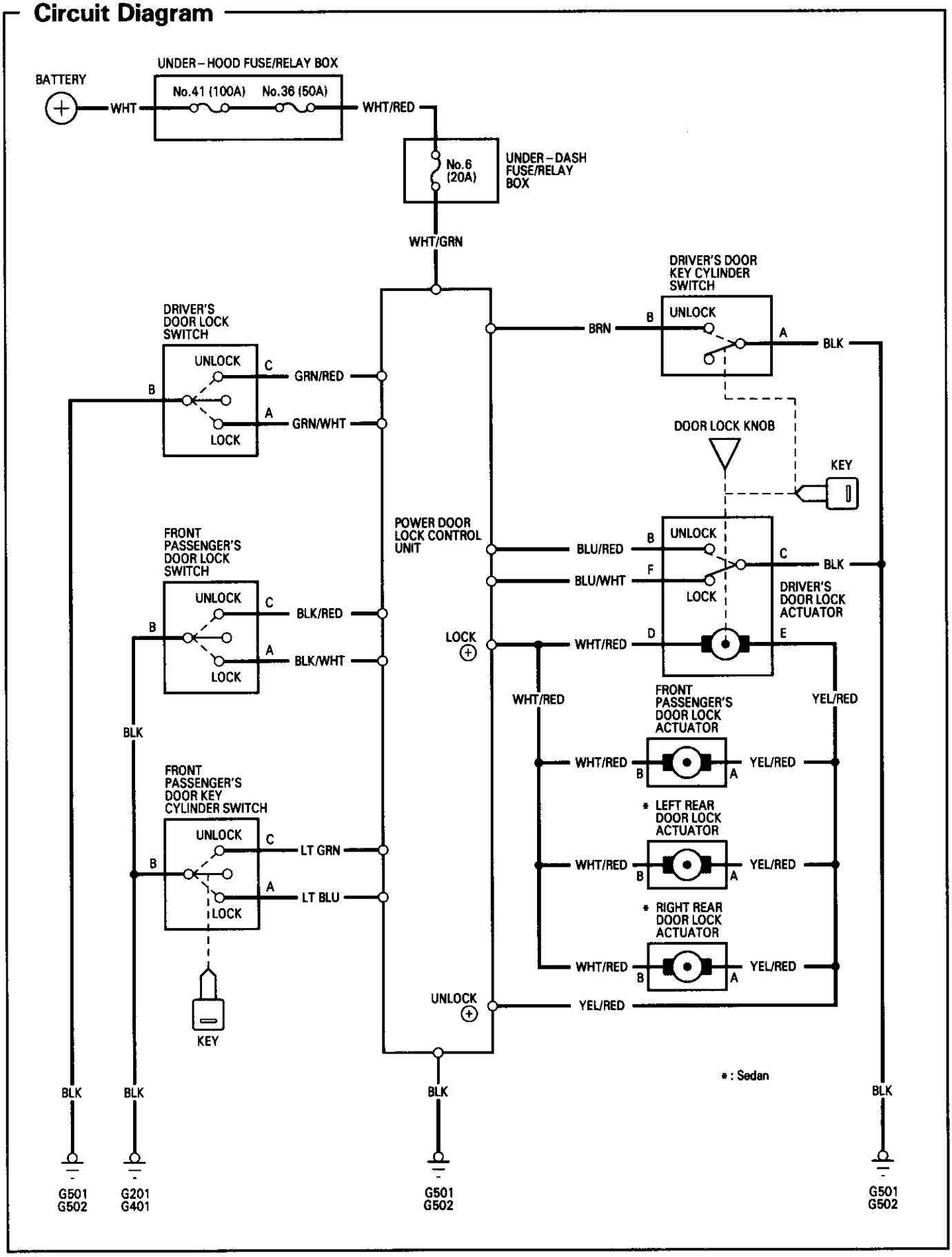

Troubleshooting

NOTE: The numbers in the table show the troubleshooting sequence.

Symptom \ Item to be inspected		Blown No. 6 (20 A) fuse (In the under-dash fuse/relay box)	Disconnected or obstructed door lock rod/linkage	Driver's door lock knob switch (In the door lock actuator)	Driver's door key cylinder switch	Front passenger's door key cylinder switch	Driver door lock actuator	Passenger's door lock actuator	Driver's door lock switch	Passenger's door lock switch	Control unit input	Poor ground	Open circuit, loose or disconnected terminals
Power door lock system doesn't operate at all.		1									2	G501 G502	WHT/GRN
Doors don't lock or unlock with the driver's door lock switch.	All doors								1		2	G501 G502	GRN/RED or GRN/WHT
	One or more doors		1				2	3					WHT/RED or YEL/RED
Doors don't lock or unlock with the passenger's door lock switch.	All doors									1	2	G201 G401	BLK/RED or BLK/WHT
	One or more doors		1				2	3					WHT/RED or YEL/RED
Doors don't lock or unlock with the driver's door lock knob.	All doors		1	2							3	G501 G502	BLU/RED or BLU/WHT
	One or more doors		1				2	3					WHT/RED or YEL/RED
Door don't lock or unlock with the passenger's door key.	All doors					1					2	G201 G401	LT GRN or LT BLU
	One or more doors		1				2	3					WHT/RED or YEL/RED
Doors don't unlock with the driver's door key.	Driver's door		1		2		3					G501 G502	BRN, WHT/RED or YEL/RED
	*All doors				1						2	G501 G502	BRN, WHT/RED or YEL/RED

* If the system is working normally, all doors will unlock when you hold the door key in the unlock position (key cylinder switch and door lock knob switch turned ON) for one second or more.

Control Unit Input Test

1. Remove the driver's door panel (see section 20).
2. Disconnect the 14-P connector from the control unit.
3. Inspect the connector and socket terminals to be sure they are all making good contact.
   - If the terminals are bent, loose or corroded, repair them as necessary, and recheck the system.
   - If the terminals look OK, make the following input tests at the connector.
     - If any test indicates a problem, find and correct the cause, then recheck the system.
     - If all the input tests prove OK, the control unit must be faulty; replace it.

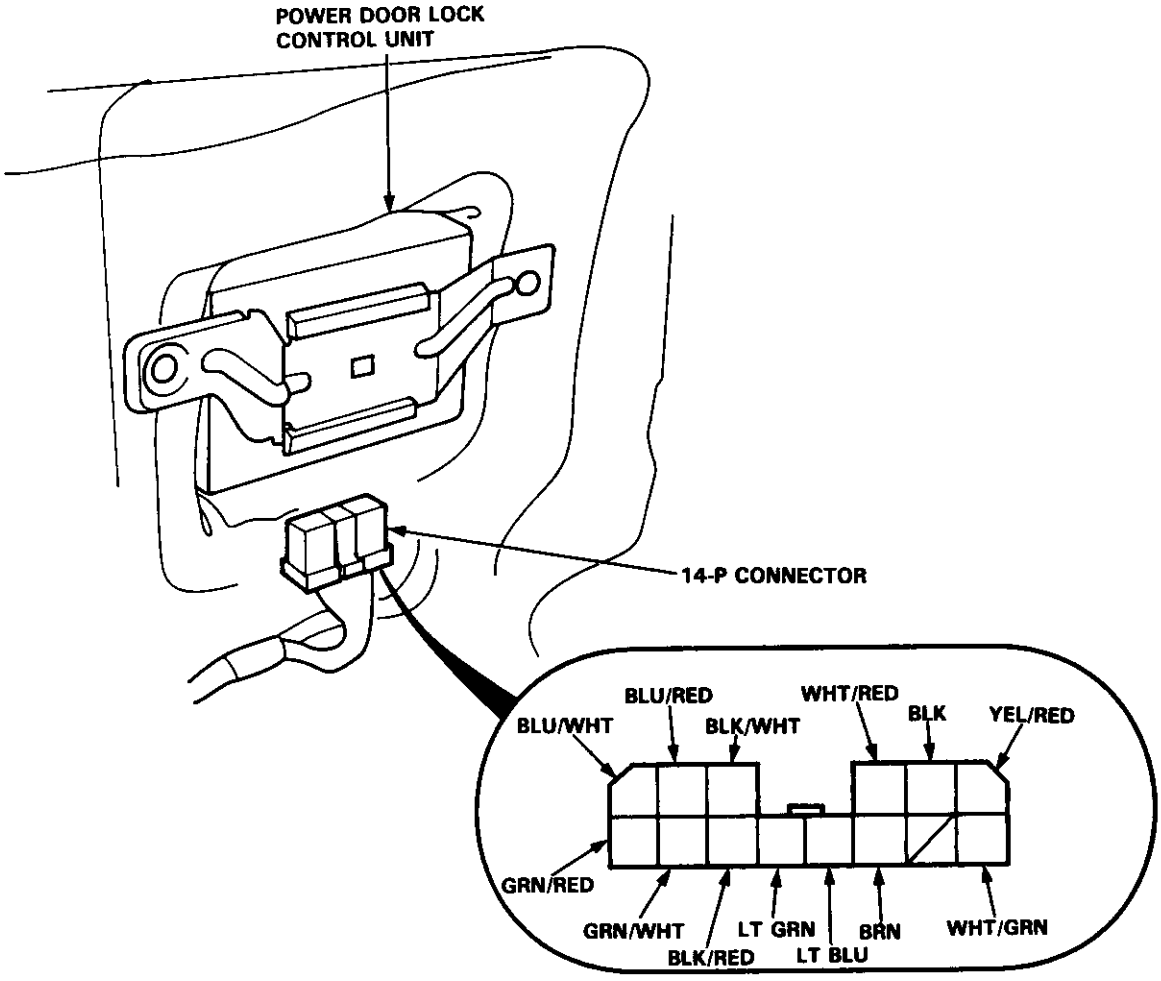

View from wire side

Disconnect the 14-P connector from the power door lock control unit.

No.	Wire	Test condition	Test: Desired result	Possible cause if result is not obtained
1	BLK	Under all conditions	Check for continuity to ground: There should be continuity.	• Poor ground (G501, G502) • An open in the wire
2	WHT/RED and YEL/RED	Connect the YEL/RED terminal to the WHT/GRN terminal, and the WHT/RED terminal to the BLK terminal momentarily.	Check door lock operation: All doors should unlock.	• Faulty actuator • An open in the wire • Blown No. 6 (20 A) fuse in the under-dash fuse/relay box
		Connect the WHT/RED terminal to the WHT/GRN terminal, and the YEL/RED terminal to the BLK terminal momentarily.	Check door lock operation: All doors should lock.	

Reconnect the 14-P connector to the power door lock control unit.

No.	Wire	Test condition	Test: Desired result	Possible cause if result is not obtained
3	WHT/GRN	Under all conditions	Check for voltage to ground: There should be battery voltage.	• Blown No. 6 (20 A) fuse in the under-dash fuse/relay box • An open in the wire
4	GRN/WHT	Driver's door lock switch in LOCK	Check for voltage to ground: There should be 1 V or less.	• Faulty driver's door lock switch • Poor ground (G501, G502) • An open in the wire
	GRN/RED	Driver's door lock switch in UNLOCK		
5	BLK/WHT	Right front door lock switch in LOCK	Check for voltage to ground: There should be 1 V or less.	• Faulty front passenger's door lock switch • Poor ground (G201, G401) • An open in the wire
	BLK/RED	Right front door lock switch in UNLOCK		
6	BLU/WHT	Driver's door lock knob in LOCK	Check for voltage to ground: There should be 1 V or less.	• Faulty driver's door lock actuator • Poor ground (G501, G502) • An open in the wire
	BLU/RED	Driver's door lock knob in UNLOCK		
7	BRN	Driver's door key cylinder in UNLOCK	Check for voltage to ground: There should be 1 V or less as the switch is turned.	• Faulty driver's door key cylinder switch • Poor ground (G501, G502) • An open in the wire
8	LT BLU	Front passenger's door key cylinder in LOCK	Check for voltage to ground: There should be 1 V or less as the switch is turned.	• Faulty front passenger's door cylinder switch • Poor ground (G201, G401) • An open in the wire
	LT GRN	Front passenger's door key cylinder in UNLOCK		

CAUTION: To prevent damage to the motor, apply battery voltage only momentarily.

Driver's Door Lock Actuator Test

1. Remove the door panel (see section 20).
2. Disconnect the 6-P connector from the actuator.

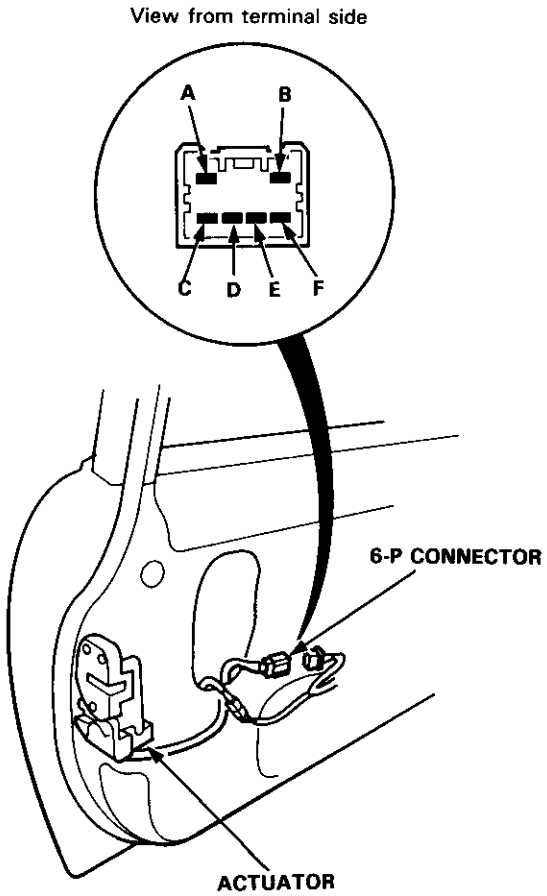

3. Check actuator operation by connecting power and ground according to the table.

Terminal / Position	D	E
LOCK	⊕	⊖
UNLOCK	⊖	⊕

CAUTION: To prevent damage to the actuator, apply battery voltage only momentarily.

4. If the actuator fails to work properly, replace it.
5. Check for continuity between the terminals in each switch position according to the table.

Terminal / Position	F	C	B
LOCK	○——	——○	
UNLOCK		○——	——○

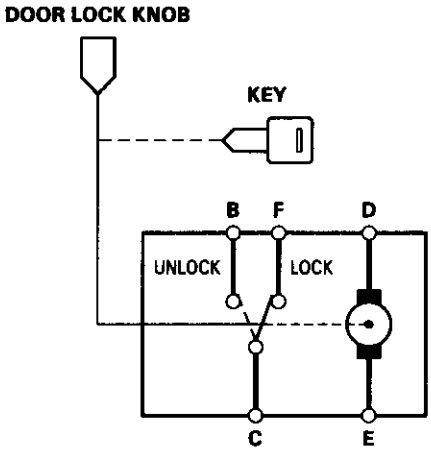

Passenger's Door Lock Actuator Test

1. Remove the door panel (see section 20).
2. Disconnect the 2-P connector from the actuator.

Front Passenger's Door:

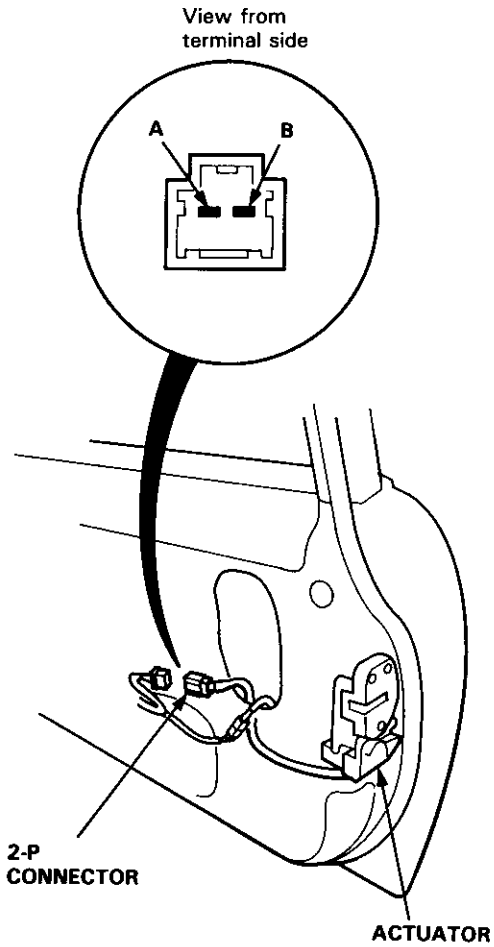

Rear Passenger's Door:

NOTE: Left rear actuator is shown, right rear actuator is similar.

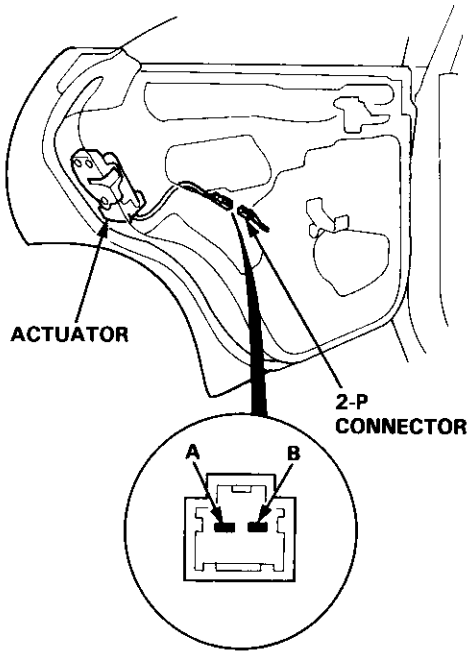

View from terminal side

3. Check actuator operation by connecting power and ground according to the table.

Terminal / Position	A	B
LOCK	⊖	⊕
UNLOCK	⊕	⊖

CAUTION: To prevent damage to the actuator, apply battery voltage only momentarily.

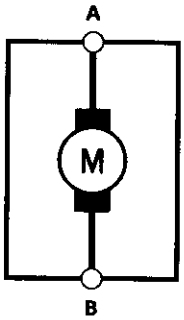

4. If the actuator fails to work properly, replace it.

Driver's Door Key Cylinder Switch Test

1. Remove the door panel (see section 20).
2. Disconnect the 2-P connector from the switch.

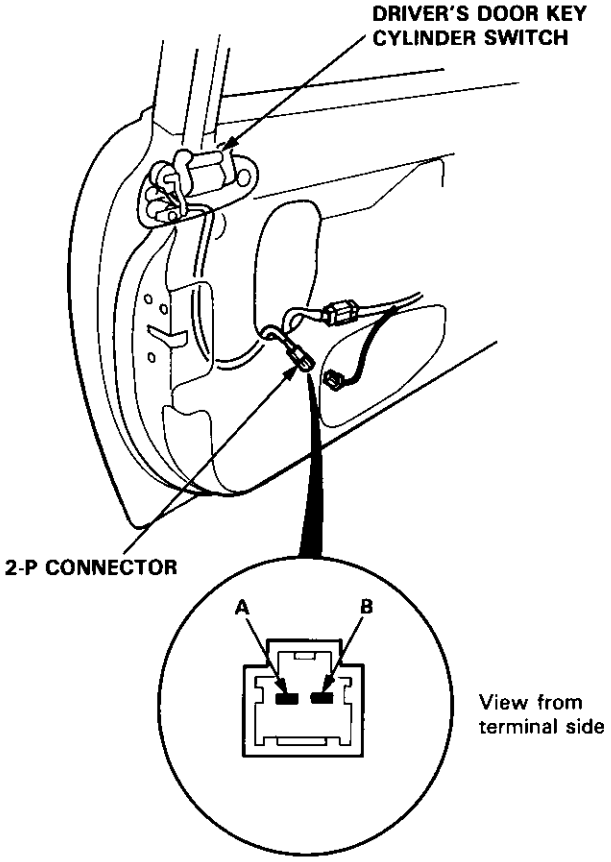

3. Check for continuity between the terminals in each switch position according to the table.

Position \ Terminal	A	B
UNLOCK	○	○
OFF		

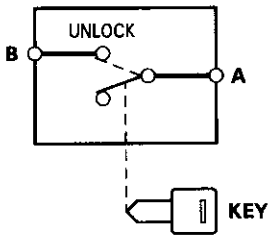

Front Passenger's Door Key Cylinder Switch Test

1. Remove the door panel (see section 20).
2. Disconnect the 3-P connector from the switch.

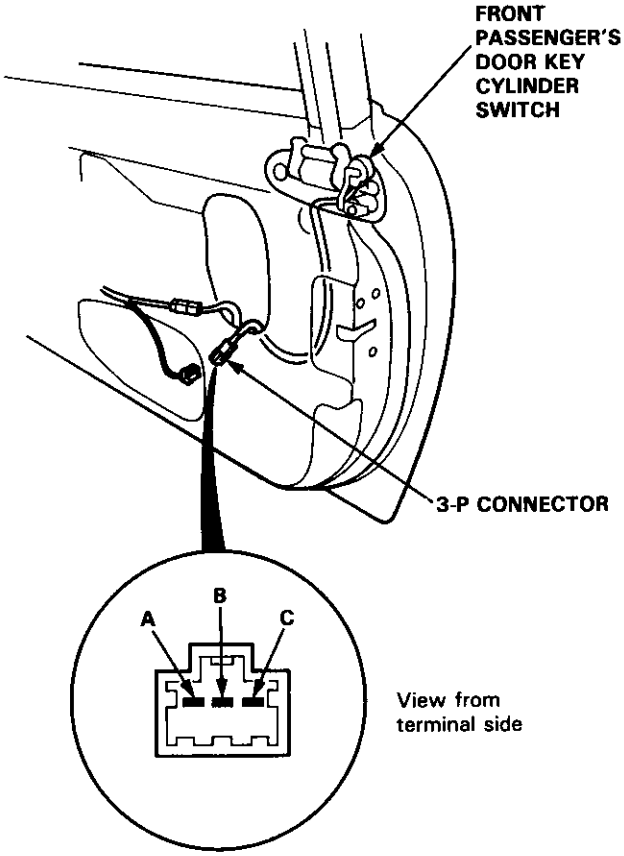

3. Check for continuity between the terminals in each switch position according to the table.

Position \ Terminal	A	B	C
LOCK	○	○	
OFF			
UNLOCK		○	○

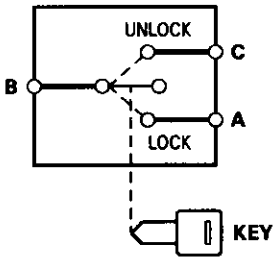

Door Lock Switch Test

1. Remove the inside handle.

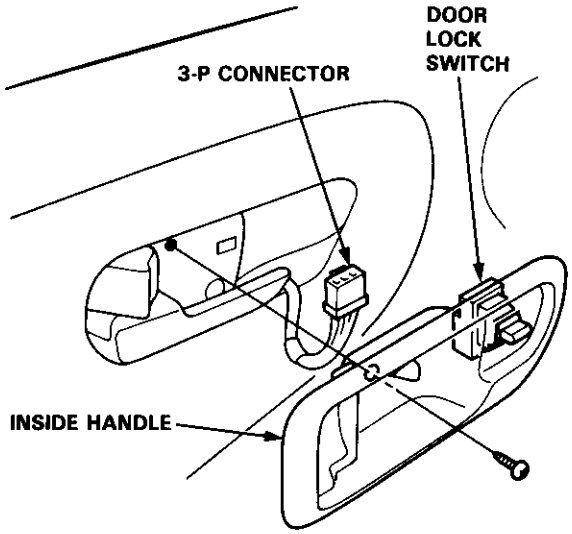

2. Disconnect the 3-P connector from the switch.

3. Check for continuity between the terminals in each switch position according to the table.

Terminal / Position	A	B	C
LOCK	○——	——○	
OFF			
UNLOCK		○——	——○

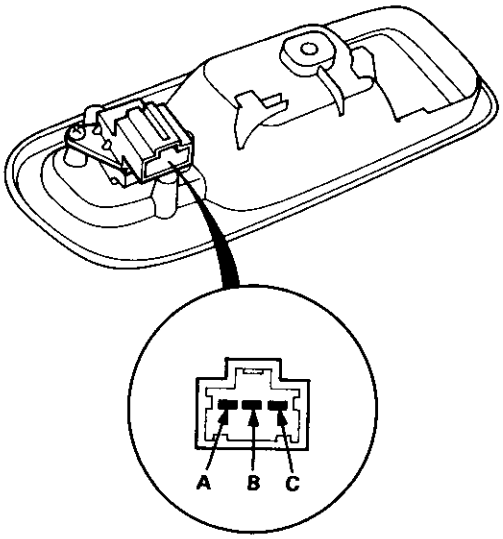

Component Location Index

CAUTION:
- **All SRS electrical wiring harnesses are covered with yellow insulation.**
- **Before disconnecting any part of the SRS wire harness, connect the short connector(s).**
- **Replace the entire affected SRS harness assembly if it has an open circuit or damaged wiring.**

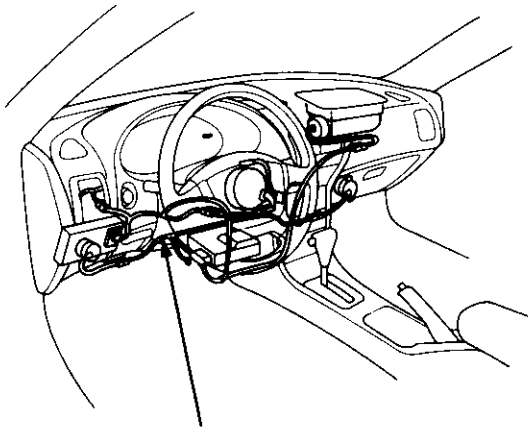

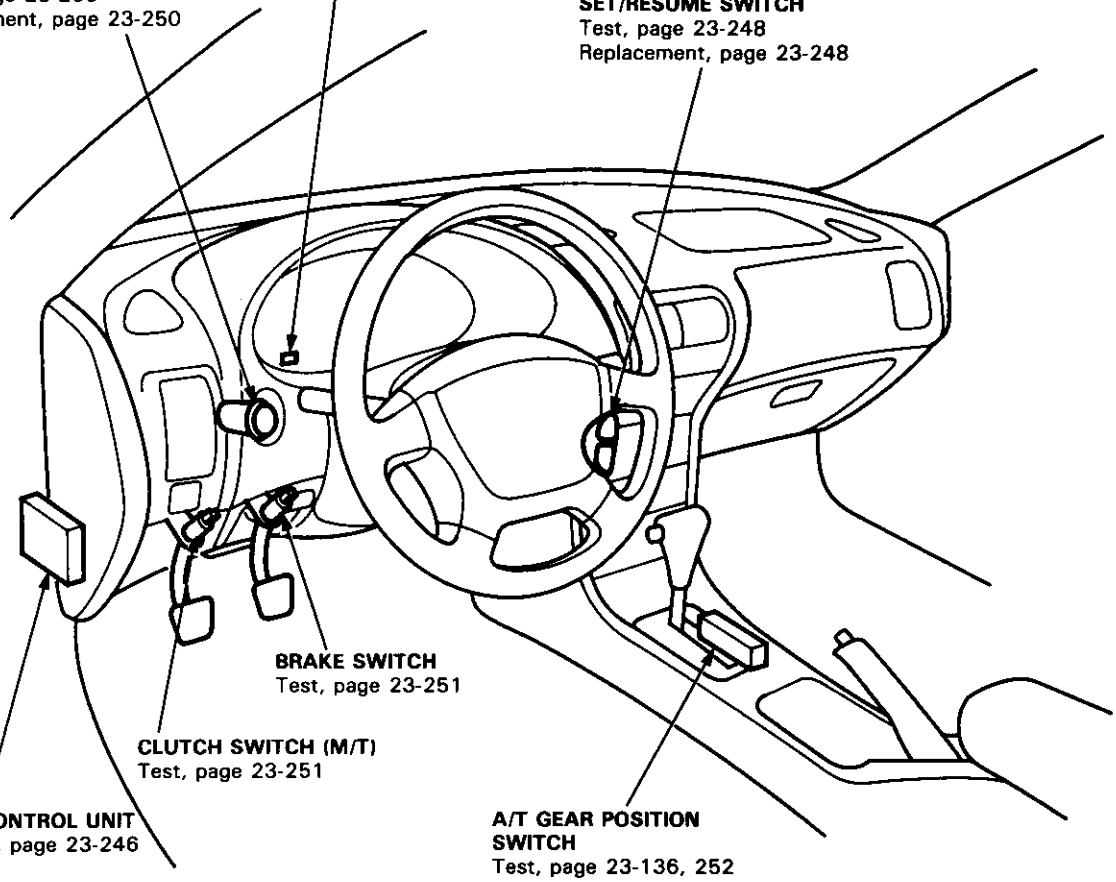

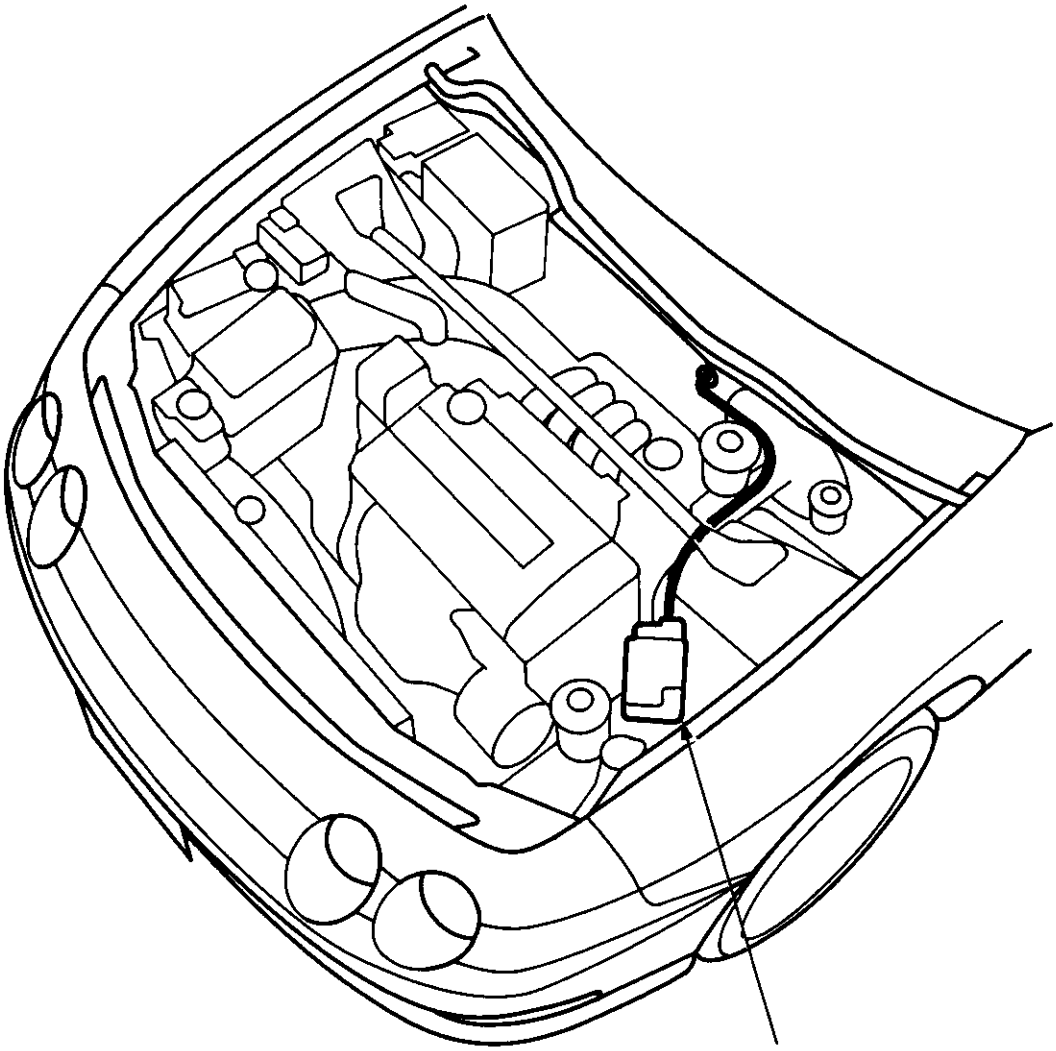

ACTUATOR ASSEMBLY
Test, page 23-253
Cable Adjustment, page 23-253

Circuit Diagram

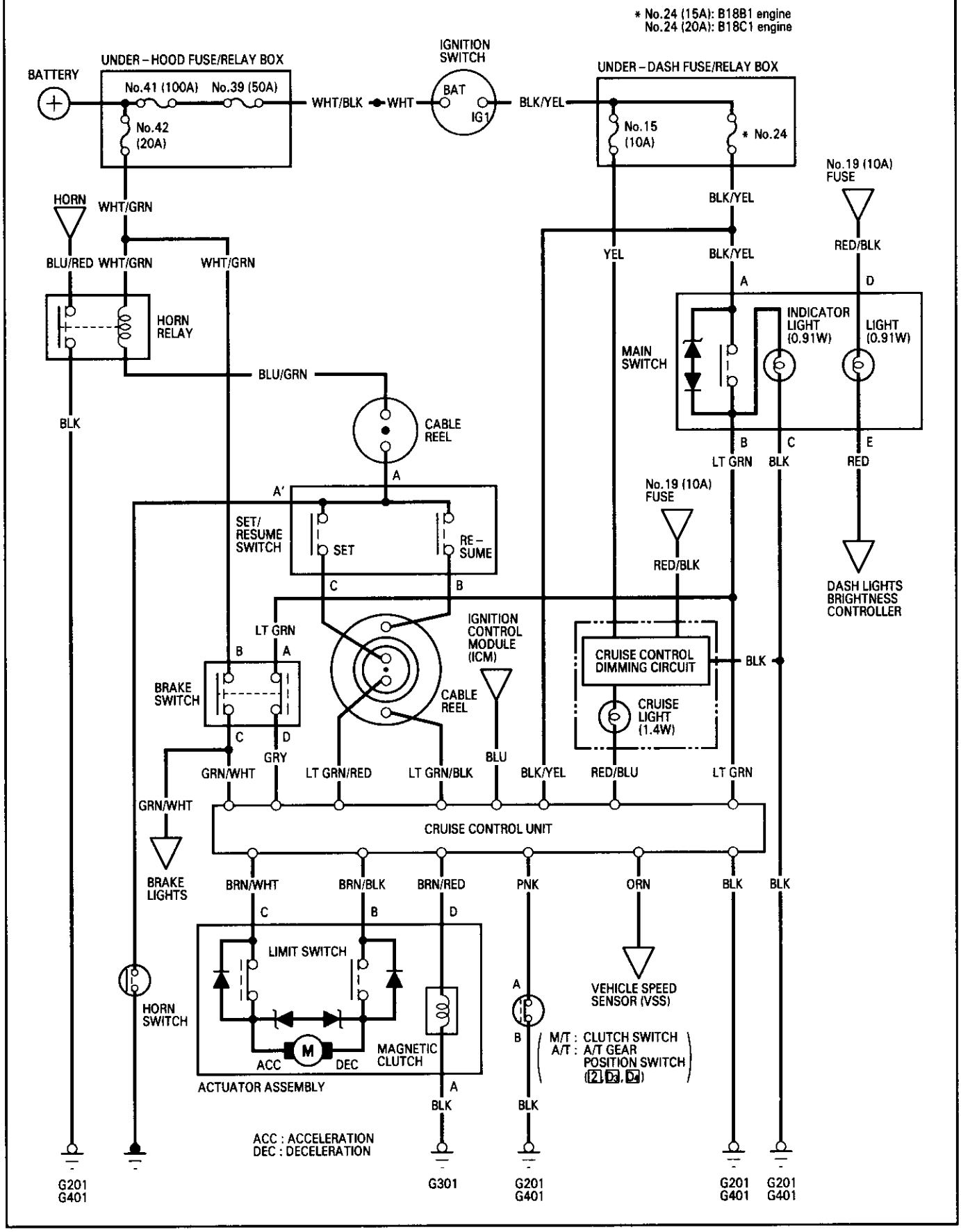

Troubleshooting

NOTE:
- The numbers in the table show the troubleshooting sequence.
- Before troubleshooting,
  - check the No.15 (10 A) and *No. 24 fuses in the under-dash fuse/relay box, and the No.41 (100 A), **No.39** (50 A), and No.42 (20 A) fuses in the under-hood fuse/relay box.
  - check that the horn sounds.
  - check the tachometer to see if it works properly.

*No. 24 (15 A): B18B1 engine
No. 24 (20 A): B18C1 engine

Symptom \ Item to be inspected	Main switch	SET/RESUME switch	Brake switch and mounting	Clutch switch and mounting (M/T)	A/T gear position switch (A/T)	Vehicle speed sensor (VSS)	Dimming circuit in gauges	Actuator and cable deflection	Control unit	Poor ground	Open circuit, loose or disconnected terminals
Cruise control cannot be set.	1	2	3	4					5	G301, G201, G401	BLU/GRN, LT GRN/RED, BLU, BLK/YEL, LT GRN, GRY, ORN, BRN/WHT, BRN/BLK, BRN/RED or PNK
Cruise control can be set, but indicator light does not go on.							1		2	G201, G401	YEL or RED/BLU
Cruise speed is noticeably higher or lower than what was set.						2		1	3		
Excessive overshooting or undershooting when trying to set speed						2		1	3		
Steady speed is not held even on a flat road with cruise control set.						1		2	3		
Car does not decelerate or accelerate accordingly when SET or RESUME button is pushed.		1							2		LT GRN/BLK LT GRN/RED
Set speed is not cancelled when clutch pedal is pushed (M/T).				1					2		
Set speed is not cancelled when shift lever is moved to [N] (A/T).					1				2		
Set speed is not cancelled when brake pedal is pushed.			1						2		
Set speed is not cancelled when main switch is pushed OFF.	1								2		
Set speed is not resumed when RESUME button is pushed (with main switch on, but set speed temporarily cancelled).		1							2		LT GRN/BLK LT GRN/RED

Control Unit Input Test

CAUTION:
- **All SRS electrical wiring harnesses are covered with yellow insulation.**
- **Before disconnecting any part of the SRS wire harness, connect the short connector(s).**
- **Replace the entire affected SRS harness assembly if it has an open circuit or damaged wiring.**

1. Remove the dashboard lower cover and knee bolster (see page 23-70).

2. Disconnect the 14-P connector from the control unit.

3. Inspect the connector and socket terminals to be sure they are all making good contact.

   - If the terminals are bent, loose or corroded, repair them as necessary, and recheck the system.
   - If the terminals look OK, make the following input tests at the connector.
     - If any test indicates a problem, find and correct the cause, then recheck the system.
     - If all the input tests prove OK, the control unit must be faulty; replace it.

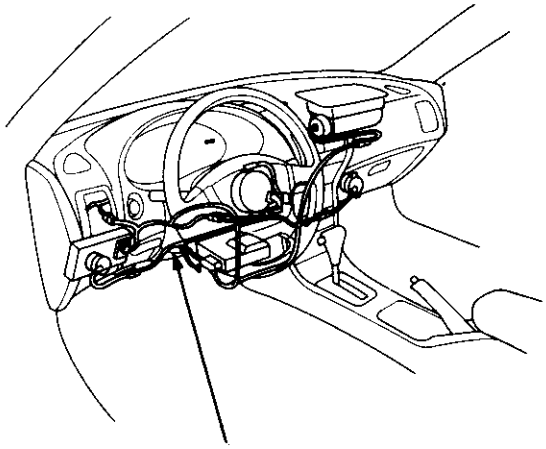

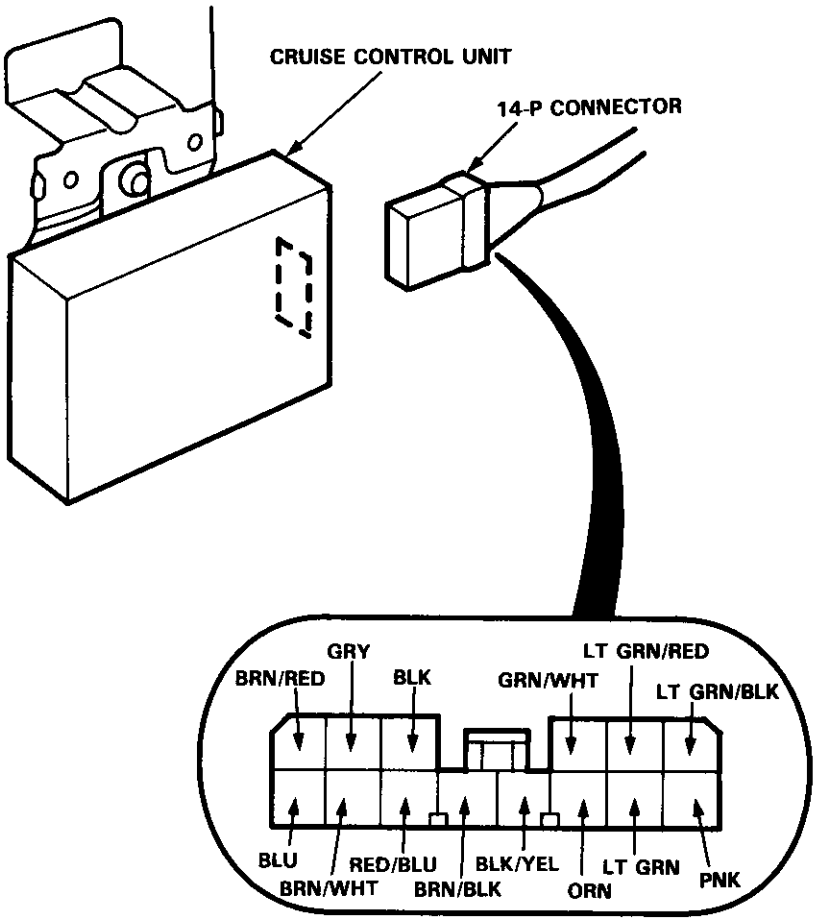

View from wire side

No.	Wire	Test condition	Test: Desired result	Possible cause if result is not obtained
1	BLK	Under all conditions	Check for continuity to ground: There should be continuity.	• Poor ground (G201, G401) • An open in the wire
2	BLK/YEL	Ignition switch ON (II)	Check for voltage to ground: There should be battery voltage.	• Blown *No. 24 fuse in the under-dash fuse/relay box • An open in the wire
3	LT GRN	Ignition switch ON (II) and main switch ON	Check for voltage to ground: There should be battery voltage.	• Faulty main switch • An open in the wire
4	GRY	Ignition switch ON (II), main switch ON and brake pedal pushed, then released	Check for voltage to ground: There should be 0 V with the pedal pushed and battery voltage with the pedal released.	• Faulty brake switch • An open in the wire
5	GRN/WHT	Brake pedal pushed, then released	Check for voltage to ground: There should be battery voltage with the pedal pushed, and 0 V with the pedal released.	• Blown No. 42 (20 A) fuse in the under-hood fuse/relay box • Faulty brake switch • An open in the wire
6	RED/BLU	Ignition switch ON (II)	Connect to ground: Indicator light in the gauge assembly comes on.	• Blown bulb • Blown No. 15 (10 A) fuse in the under-dash fuse/relay box • Faulty dimming circuit in the gauge assembly • An open in the wire
7	LT GRN/ BLK	RESUME button pushed	Check for voltage to ground: There should be battery voltage.	• Faulty SET/RESUME switch • Faulty cable reel • An open in the wire
8	LT GRN/ RED	SET button pushed		
9	PNK	MT/: Clutch pedal released A/T: Shift lever in [2], [D3], or [D4]	Check for continuity to ground: There should be continuity. NOTE: There should be no continuity when the clutch pedal is depressed or when the shift lever is in other positions.	• Faulty or misadjusted clutch switch (M/T) • Faulty A/T gear position switch (A/T) • Poor ground (G201,G401) • An open in the wire
10	BLU	Start the engine.	Check for voltage to ground: There should be battery voltage.	• Faulty ignition system or ECM • An open in the wire
11	ORN	Ignition switch ON (II) and main switch ON; raise the front of the car, rotate one wheel slowly.	Check for voltage between the ORN ⊕ and BLK ⊖ terminals: There should be 0— about 10 V—0— about 10 V repeatedly.	• Faulty vehicle speed sensor (VSS) • An open in the wire
12	BRN/WHT	Connect battery power to the BRN/WHT terminal and ground to the BRN/BLK terminal.	Check the sound of the actuator motor: You should hear the motor running smoothly.	• Faulty actuator • An open in the wire
13	BRN/BLK			
14	BRN/RED	Connect battery power to the BRN/RED terminal.	Check the operation of the magnetic clutch: Clutch should click and output link should be locked.	• Faulty actuator • An open in the wire • Poor ground (G301)

*No. 24 (15 A): B18B1 engine
No. 24 (20 A): B18C1 engine

Set/Resume Switch Test/Replacement

CAUTION:
- **All SRS electrical wiring harnesses are covered with yellow insulation.**
- **Before disconnecting any part of the SRS wire harness, connect the short connector(s).**
- **Replace the entire affected SRS harness assembly if it has an open circuit or damaged wiring.**

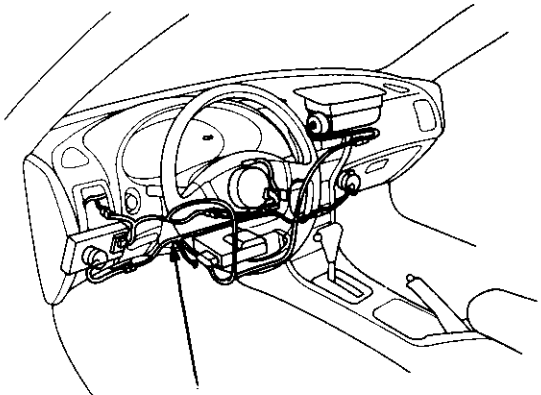

SRS MAIN HARNESS
(Covered with yellow insulation)

NOTE: The original radio has a coded theft protection circuit. Be sure to get the customer's code number before
— disconnecting the battery.
— removing the No. 32 (7.5 A) fuse from the under-hood fuse/relay box.
— removing the radio.
After service, reconnect power to the radio and turn it on. When the word "CODE" is displayed, enter the customer's 5-digit code to restore radio operation.

1. Disconnect the battery negative cable, then disconnect the positive cable.

2. Connect the short connector(s) to the airbag(s).

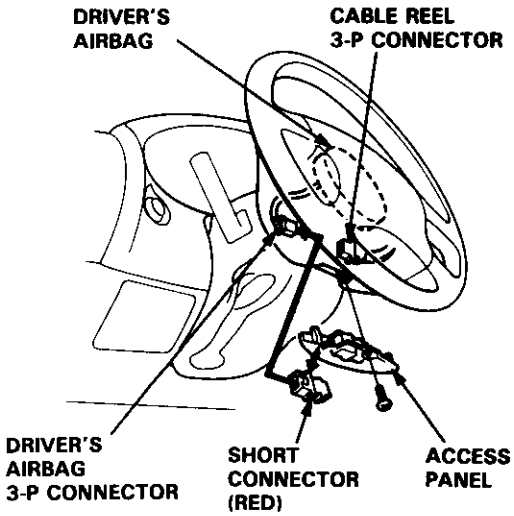

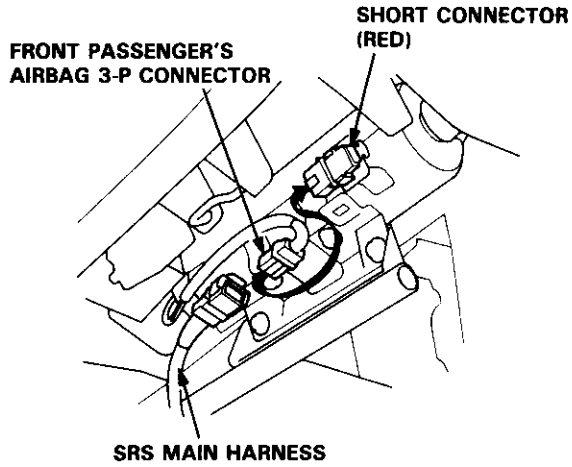

3. Remove the dashboard lower cover and knee bolster (see page 23-70).

4. Disconnect the cable reel harness 6-P connector from the SRS main harness, then connect Test Harness C only to the cable reel side of 6-P connector.

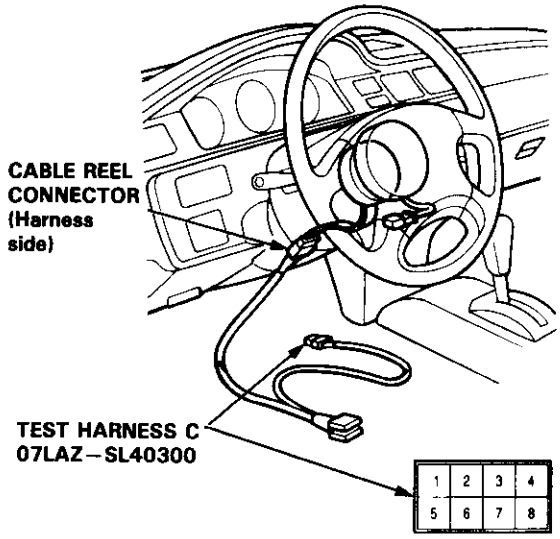

5. Check for continuity between the terminals of Test Harness C in each switch position according to the table.

Position \ Terminal	3	2	1
SET (ON)	○	○	
RESUME (ON)	○		○

- If there is continuity, the switch is OK.
- If there is no continuity, go to step 6.

6. Remove the cover carefully by prying between the cover and the switch in the sequence shown.

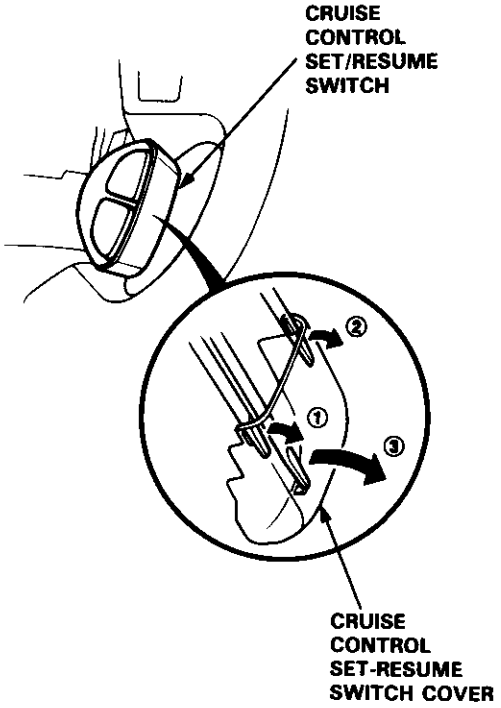

7. Remove the two screws and remove the switch.

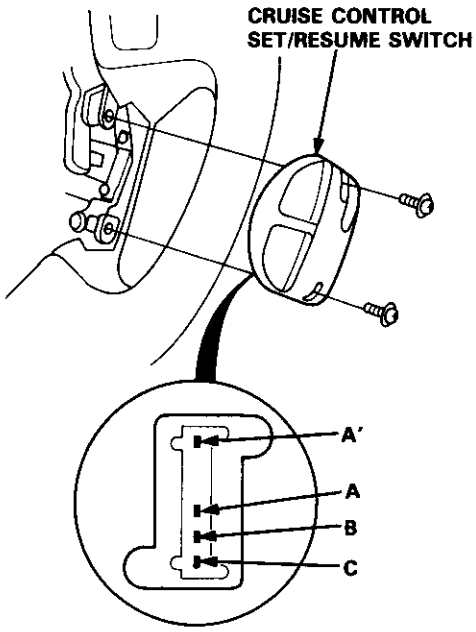

8. Check for continuity between the terminals in each switch position according to the table.

Position \ Terminal	A	A'	B	C
OFF	○	○		
SET (ON)	○	○		○
RESUME (ON)	○	○	○	

- If there is no continuity in any position, replace the switch.
- If there is continuity in every position, replace the cable reel (see page 23-302).

Main Switch Test/Replacement

NOTE: Be careful not to damage the switch and the instrument panel.

1. Remove the instrument panel from the dashboard (see page 23-118).

2. Remove the switch from the dashboard, then disconnect the 5-P connector.

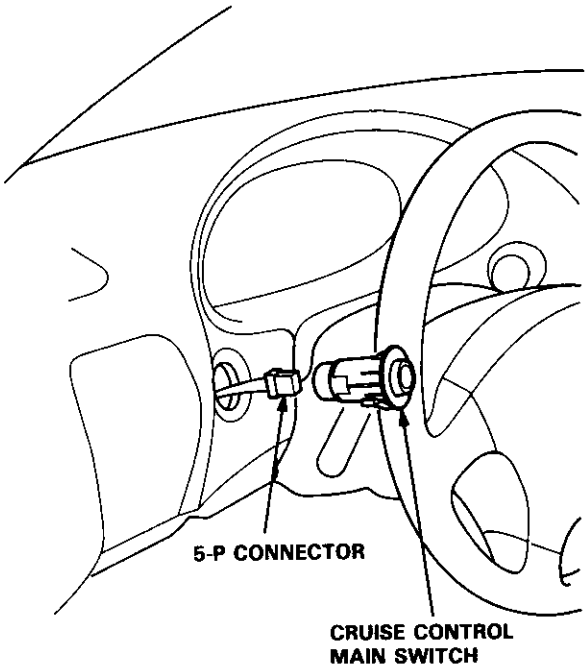

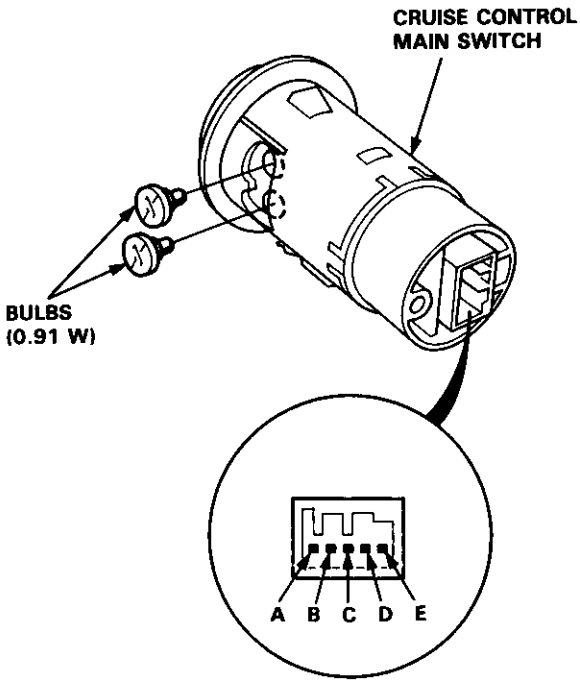

3. Check for continuity between the terminals in each switch position according to the table.

Terminal / Position	A	B		C	D		E
OFF		○	⊗	○	○	⊗	○
ON	○	○	⊗	○	○	⊗	○

- If there is no continuity in any position, replace the switch.

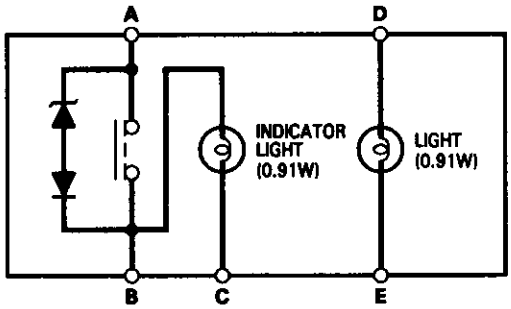

Brake Switch Test

1. Disconnect the 4-P connector from the switch.

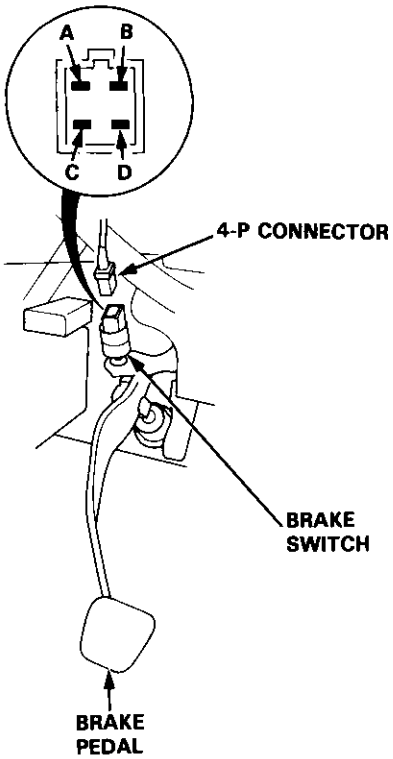

2. Check for continuity between the terminals according to the table.

Terminal / Brake pedal	A	B	C	D
RELEASED	○			○
PUSHED		○	○	

3. If necessary, replace the switch or adjust pedal height (see section 19).

Clutch Switch Test (M/T)

1. Disconnect the 2-P connector from the switch.

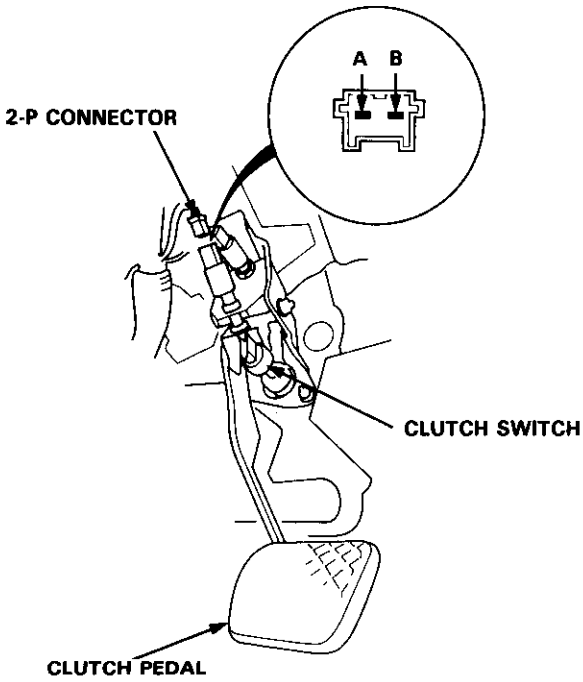

2. Check for continuity between the terminals according to the table.

Terminal / Clutch pedal	A	B
RELEASED	○	○
PUSHED		

3. If necessary, replace the switch or adjust pedal height (see section 12).

A/T Gear Position Switch Test

1. Remove the center console, then disconnect the 14-P connector from the switch.

2. Check for continuity between the terminals in each switch position according to the table.

   NOTE:
   - Move the lever back and forth at each position without touching the button, and check for continuity within the range of free play of the shift lever.
   - If there is no continuity within the range of free play, adjust the installation position of the switch.

A/T Gear Position Switch (For cruise control)

Position \ Terminal	A	I
1		
2	○———	———○
D3	○———	———○
D4	○———	———○
N		
R		
P		

View from terminal side

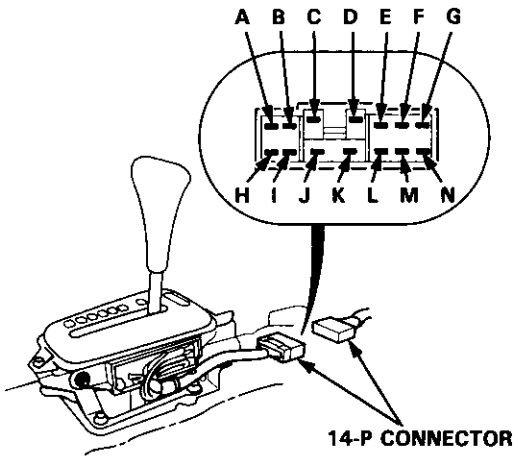

3. If necessary, replace the switch (see section 13).

Actuator Assembly Test

1. Disconnect the 4-P connector from the actuator.
2. Check that the output linkage moves smoothly.
3. Connect battery power to the D terminal and ground to the A terminal.

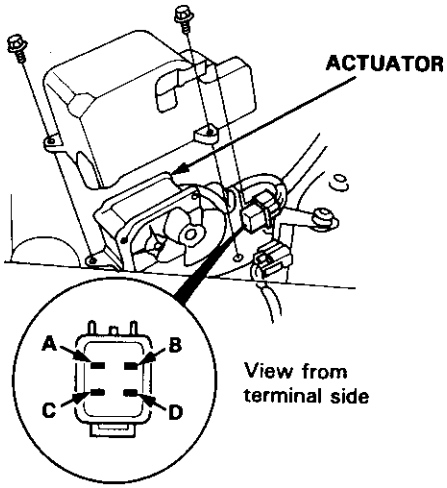

4. Check for a clicking sound from the magnetic clutch, and that the output linkage is locked. If the output linkage is not locked, replace the actuator assembly.
5. Check the operation of the actuator motor in each output linkage position according to the table (you should be able to hear the motor).

Battery polarities		Output linkage position		
⊕	⊖	FULLY CLOSED	MIDDLE POSITION	FULLY OPEN
C Terminal	B Terminal	The motor runs.	The motor runs.	The motor stops.
B Terminal	C Terminal	The motor stops.	The motor runs.	The motor runs.

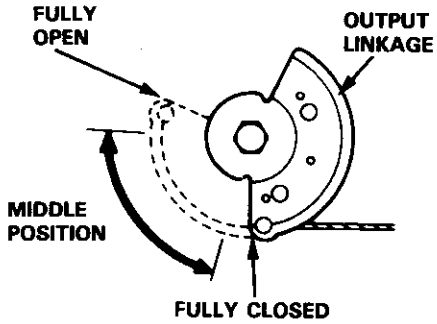

Actuator Cable Adjustment

1. Check that the actuator cable operates smoothly without binding or sticking.
2. Start the engine and warm it up to normal operating temperature (radiator fans come on twice).
3. Measure how far the output linkage moves from the fully closed position. Free play should be 11 ± 1.5 mm (0.43 ± 0.06 in).

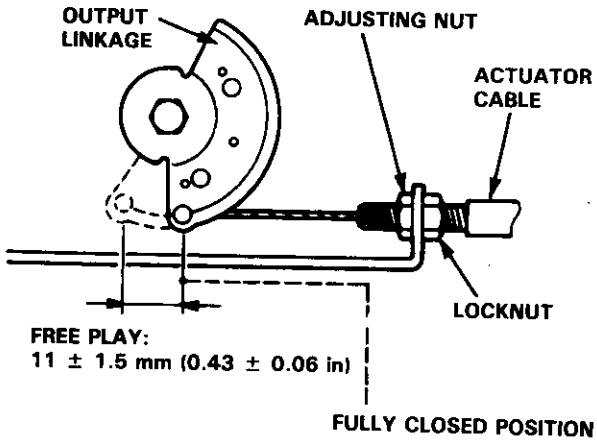

4. If the free play is not within specs, loosen the locknut and turn the adjusting nut as required.

   NOTE: If necessary, check the throttle control system (see section 11), then recheck the output linkage free play.

5. Retighten the locknut and recheck the free play.

Component Location Index

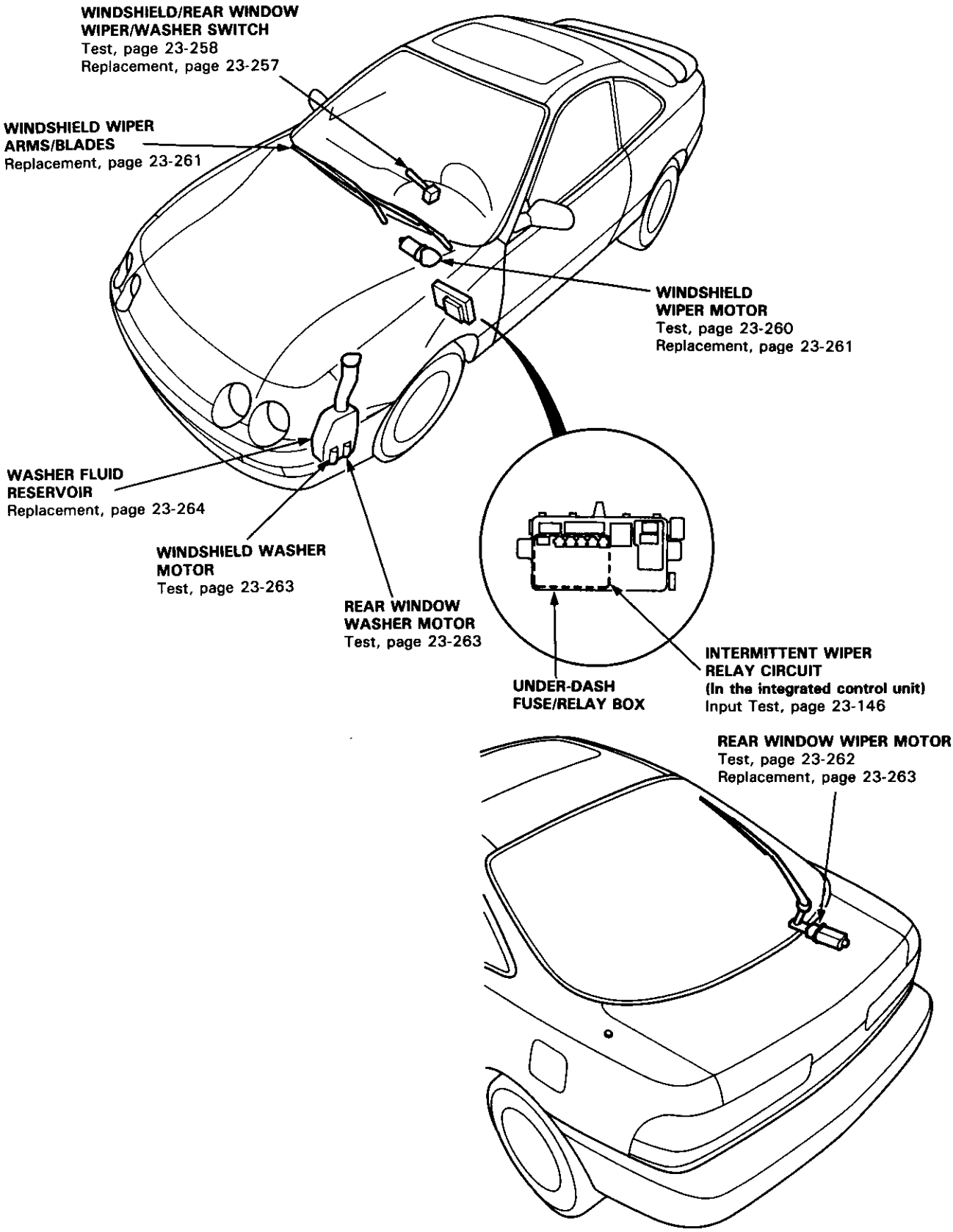

Circuit Diagram

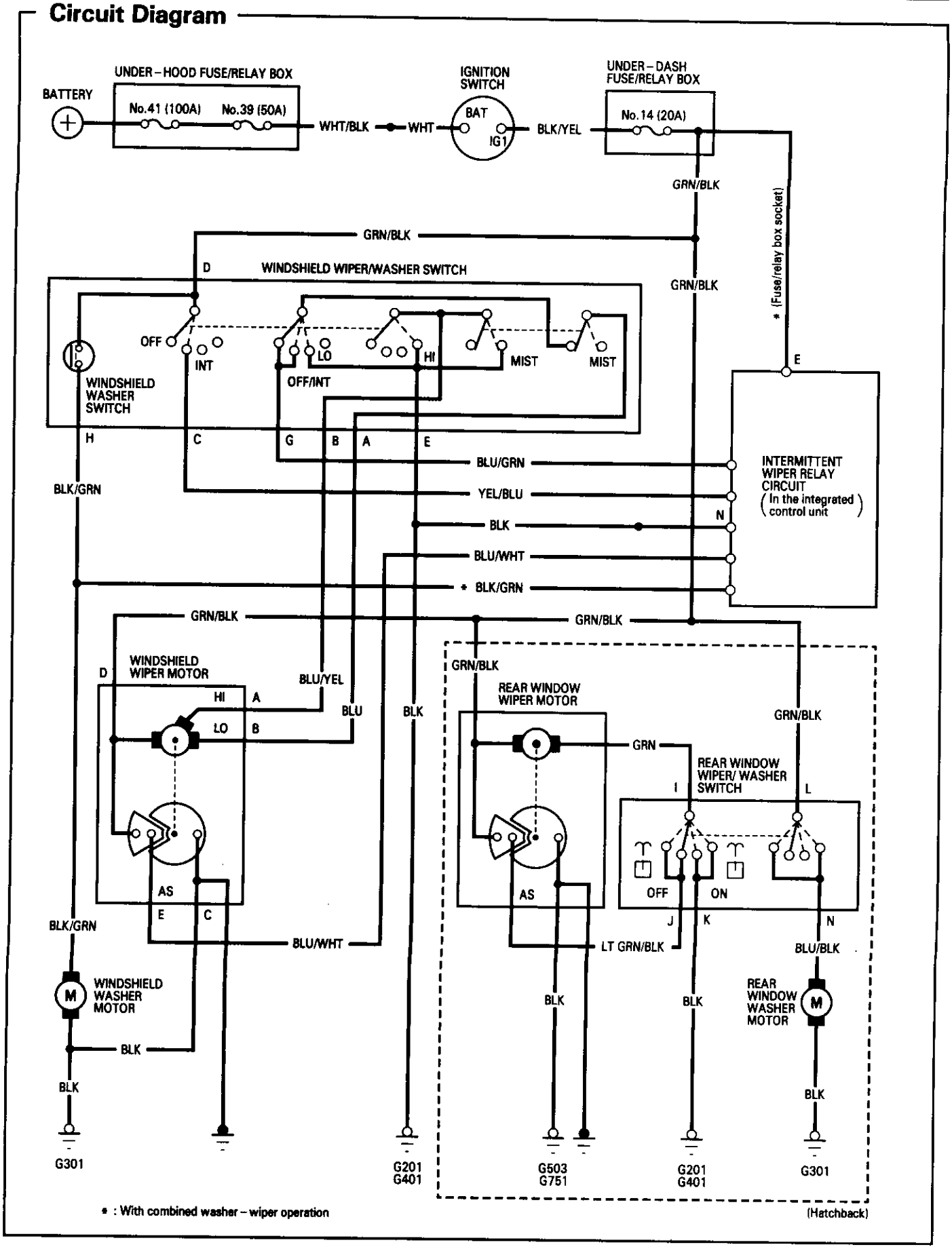

Troubleshooting

NOTE: The numbers in the table show the troubleshooting sequence.

Symptom \ Item to be inspected		Blown No. 14 (20 A) fuse (In the under-dash fuse/relay box)	Wiper switch	Wiper motor	Washer switch	Washer motor	Intermittent wiper relay circuit (In the integrated control unit)	Not enough washer fluid in reservoir	Disconnected, blocked washer hose or clogged outlet	Disconnected wiper linkages	*Combined operation of wiper/washer (In the integrated control unit)	Poor ground	Open circuit, loose or disconnected terminals
Wipers do not work.	In all positions	1	4	2						3		G201, G301, G401	GRN/BLK
	In INT		1	3			2						YEL/BLU, BLU/GRN
	In LO or HI		1	2									BLU, BLU/YEL
	In MIST		1	2									BLU/YEL
Rear window wiper does not work.		1	3	2								G503, G751	GRN/BLK, GRN LT GRN/BLK
Blades do not return to park position when the switch is turned OFF.			2	1									BLU/WHT, LT GRN/BLK
Intermittent cycle is erratic or wipers do not work intermittently.			1				2						YEL/BLU, BLU/GRN
Little or no washer fluid is pumped.					4	3		1	2			G301	BLK/GRN, BLU/BLK
Wiper and washer do not work at the same time.				3		2					1		BLK/GRN

*: Canada

Wipers/Washers Switch Replacement

CAUTION:

- **All SRS electrical wiring harnesses are covered with yellow insulation.**
- **Before disconnecting the SRS wire harness, install the short connector(s).**
- **Replace the entire affected SRS harness assembly if it has an open circuit or damaged wiring.**

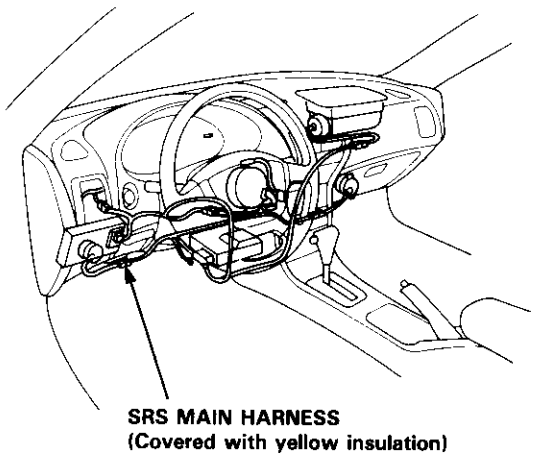

1. Remove the steering column covers.

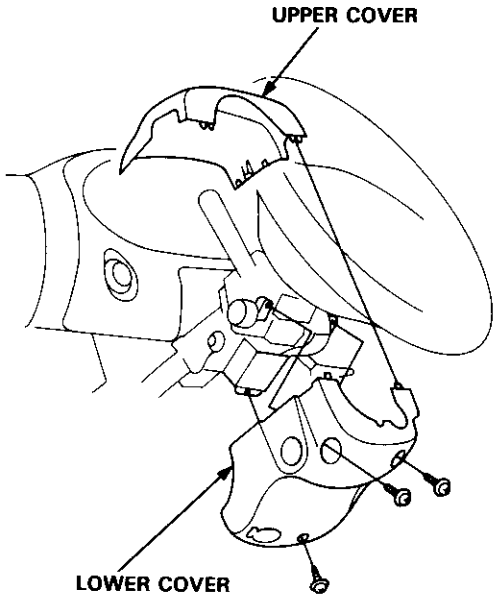

2. Disconnect the 8-P and 6-P connectors from the switch.
3. Remove the two screws and the switch.

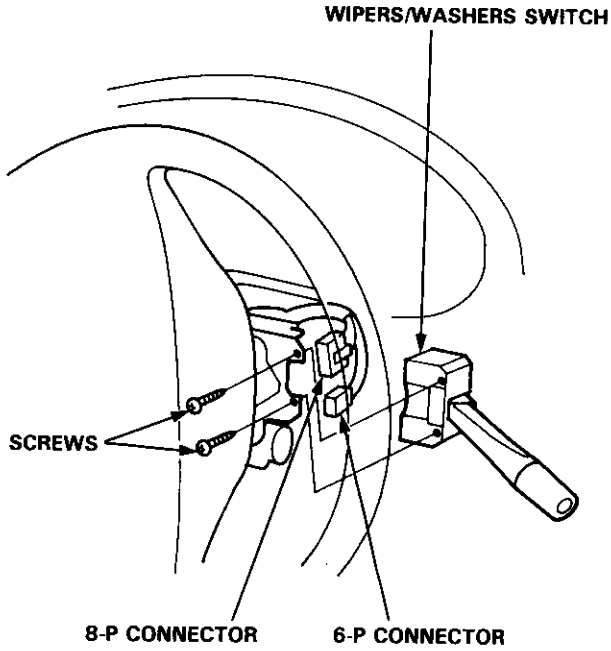

4. Install in the reverse order of removal.

Wipers/Washers Switch Test

CAUTION:

- **All SRS electrical wiring harnesses are covered with yellow insulation.**
- **Before disconnecting any part of the SRS wire harness, connect the short connector(s).**
- **Replace the entire affected SRS harness assembly if it has an open circuit or damaged wiring.**

1. Remove the steering column covers.
2. Disconnect the 8-P and 6-P connectors from the switch.
3. If necessary, remove the two screws and the switch.
4. Check for continuity between the terminals in each switch position according to the table.

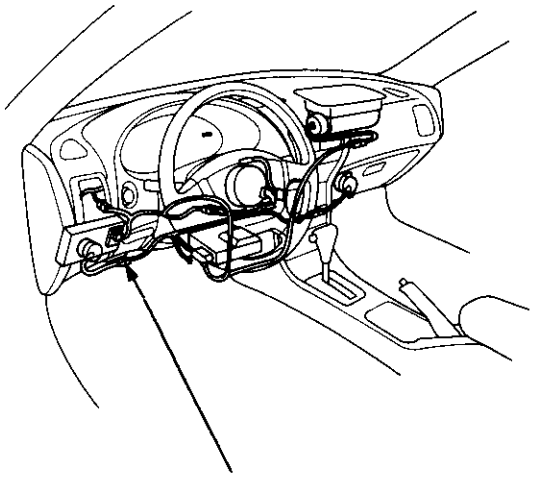

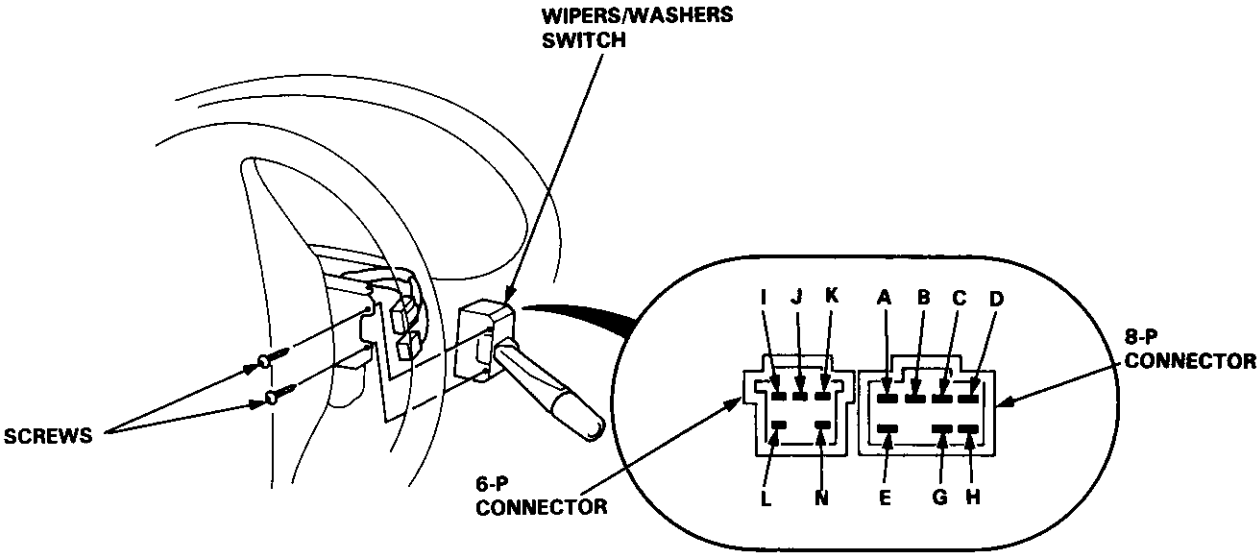

Windshield Wiper/Washer Switch

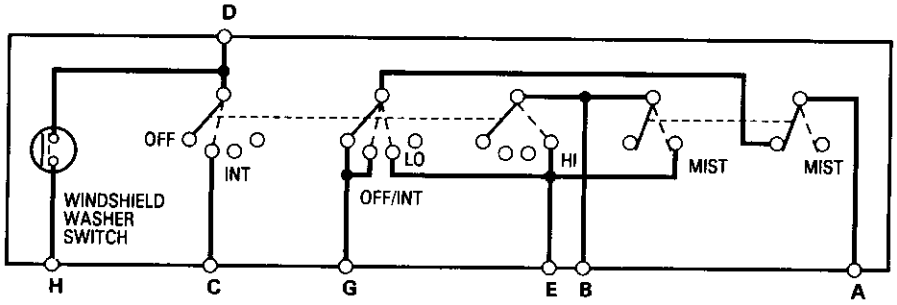

Position \ Terminal	A	B	C	D	E	G	H
OFF	○					○	
INT	○		○	○		○	
LO	○				○		
HI		○			○		
Mist switch "ON"		○			○		
Washer switch "ON"				○			○

Rear Window Wiper/Washer Switch

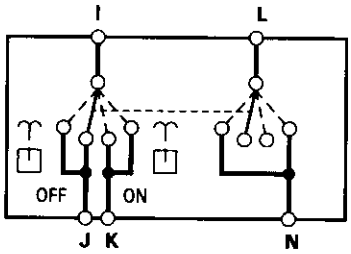

Position \ Terminal	I	J	K	L	N
Washer switch "ON"	○	○		○	○
OFF	○	○			
ON	○		○		
Washer switch "ON" (with wiper "ON")	○		○	○	○

Windshield Wiper Motor Test

1. Open the hood and remove the cap nuts and the wiper arms (see page 23-261).

   NOTE: Remove the wiper arms carefully without damaging the hood.

2. Remove the hood seal and air scoop by prying out their trim clips.

3. Disconnect the 5-P connector from the windshield wiper motor.

4. Test the motor by connecting battery power and ground according to the table.

Terminal / Position	D (GRN/BLK)	B (BLU)	A (BLU/YEL)
LOW SPEED	⊕	⊖	
HIGH SPEED	⊕		⊖

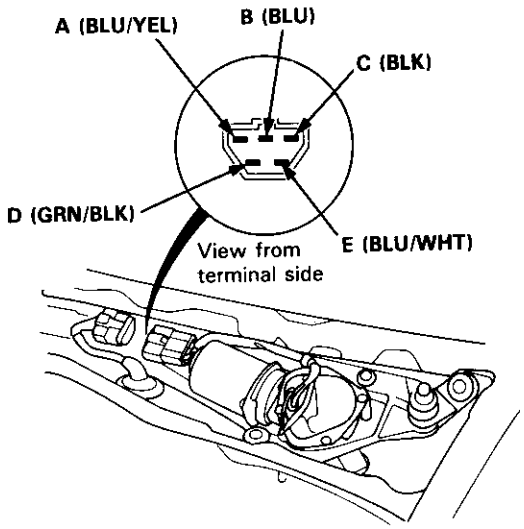

5. If the motor does not run or fails to run smoothly, replace it.

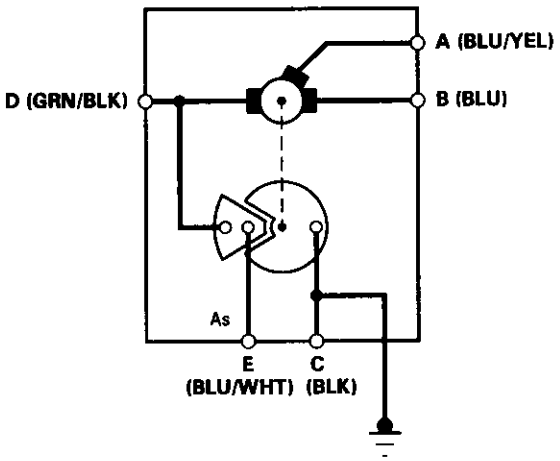

6. Reconnect the 5-P connector to the wiper motor assembly.

7. Connect an analog voltmeter between the E (BLU/WHT) and the C (BLK) terminals. Run the motor by turning the wiper switch ON (LO or HI position).
   The voltmeter should alternately indicate 0 V and more than 4 V.

   NOTE: Use an analog tester.

Windshield Wiper Motor Replacement

1. Open the hood and remove the cap nuts and wiper arms.

   NOTE: Remove the wiper arms carefully without damaging the hood.

2. Remove the hood seal and air scoop by prying out their trim clips.

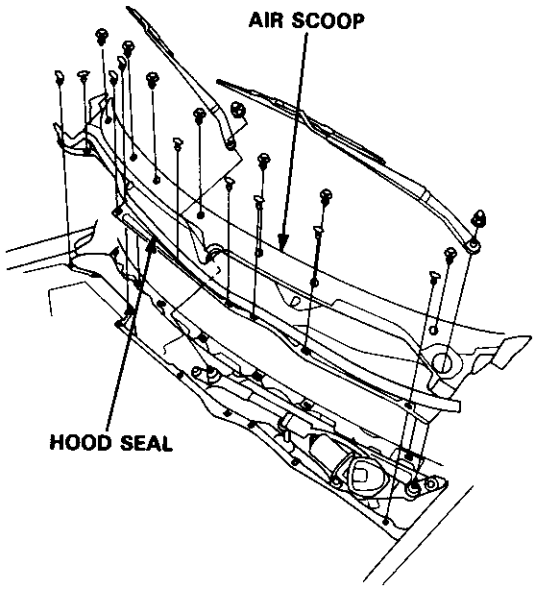

3. Disconnect the 5-P connector from the windshield wiper motor.

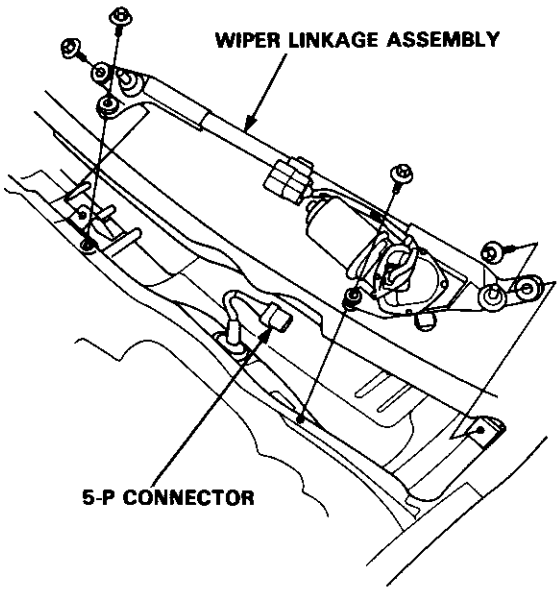

4. Remove the four mounting bolts and wiper linkage assembly.

5. Remove the wiper harness from the wiper linkage.

6. Separate the wiper linkage and crank arm at the joint.

7. Remove the three mounting bolts and wiper motor.

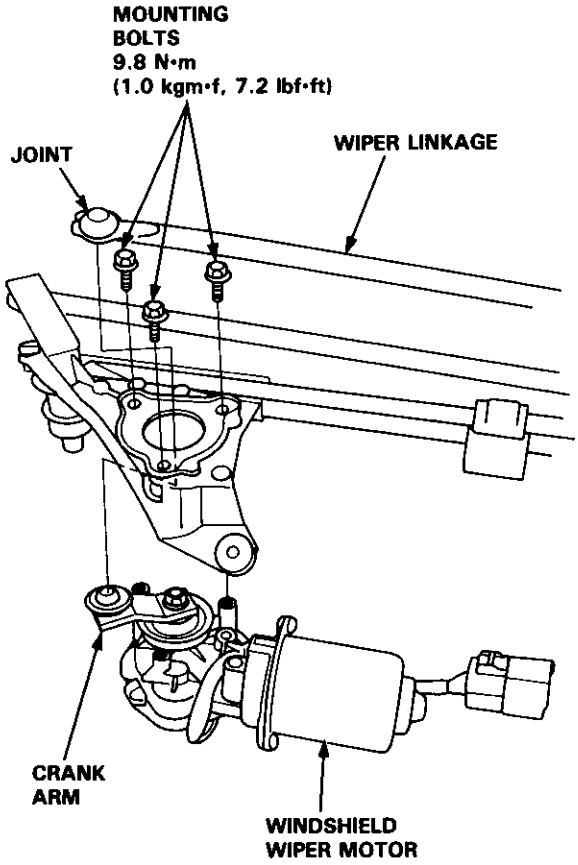

8. Install in the reverse order of removal.

Rear Window Wiper Motor Test

1. Disconnect the 4-P connector from the wiper motor.

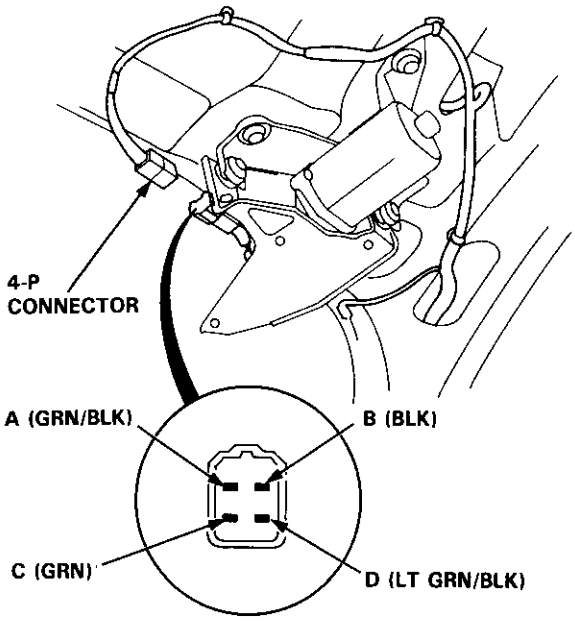

View from terminal side

2. Test the motor by connecting battery power to the A (GRN/BLK) and ground to the C (GRN) terminals. The motor should run smoothly.

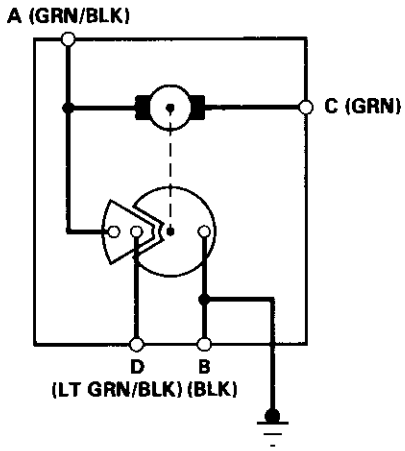

3. If the motor does not run or fails to run smoothly, replace it.

4. Reconnect the 4-P connector to the wiper motor assembly.

5. Connect an analog voltmeter between the D (LT GRN/BLK) and B (BLK) terminals. Run the motor by turning the wiper switch ON.
   The voltmeter should alternately indicate 0 V and more than 4 V.

   NOTE: Use an analog tester.

Rear Window Wiper Motor Replacement

1. Remove the cover, mounting nut, and wiper arm.

2. Remove the rubber seal, special nut, and washer.

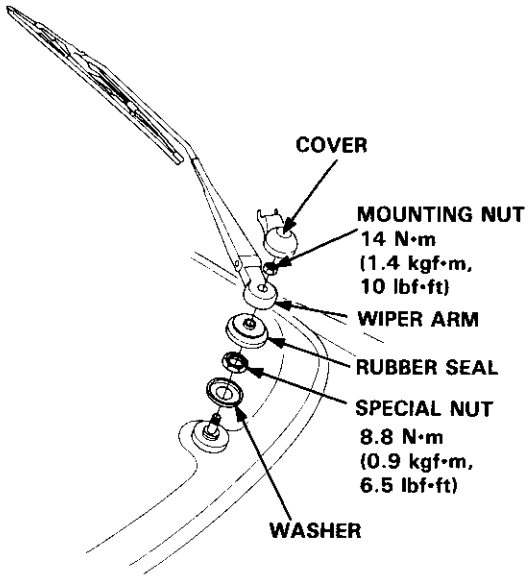

3. Open the tailgate and remove the tailgate trim panels (see section 20).

4. Disconnect the 4-P connector from the wiper motor.

5. Remove the three mounting bolts and the wiper motor assembly.

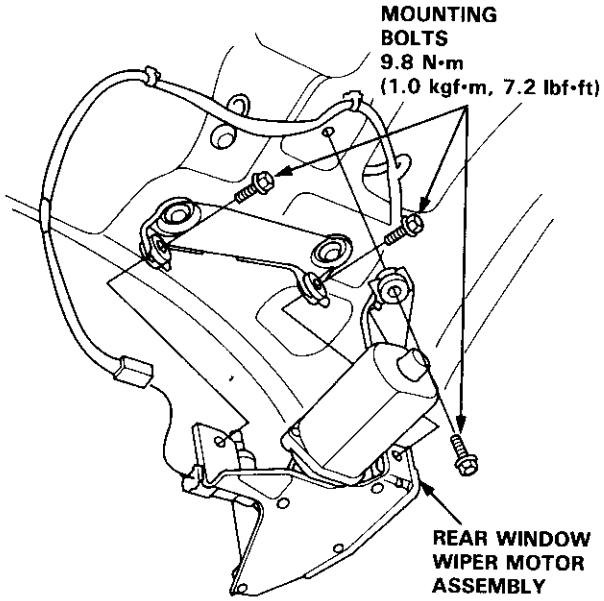

6. Install in the reverse order of removal.

Washer Motor Test

1. Remove the front bumper (see section 20).

2. Disconnect the 2-P connector from the washer motor.

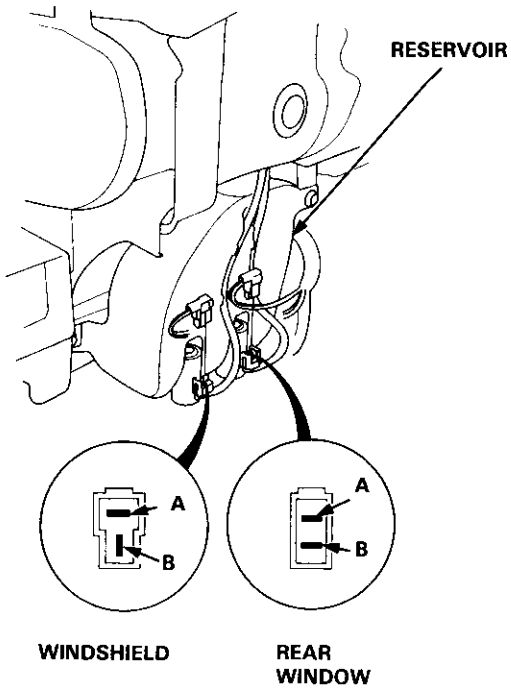

3. Test the motor by connecting battery power to the A (+) terminal and ground to the B (−) terminal.

   - If the motor does not run or fails to run smoothly, replace it.

   - If the motor runs smoothly, but little or no washer fluid is pumped, check for a disconnected or blocked washer hose, or a clogged pump outlet in the motor.

Washer Replacement

1. Remove the front bumper (see section 20).
2. Remove the left front inner fender.
3. Disconnect the 2-P connector and hose from the washer motor.
4. Remove the three mounting bolts and the washer reservoir.
5. Remove the washer motor from the reservoir.
6. Remove the windshield wiper arms and air scoop (see page 23-261). Then remove the washer nozzles and hoses.
7. Install in the reverse order of removal.

   NOTE:
   - Take care not to pinch the hoses during installation.
   - Install the clips firmly.
   - After installing, adjust the aim of the washer nozzles.

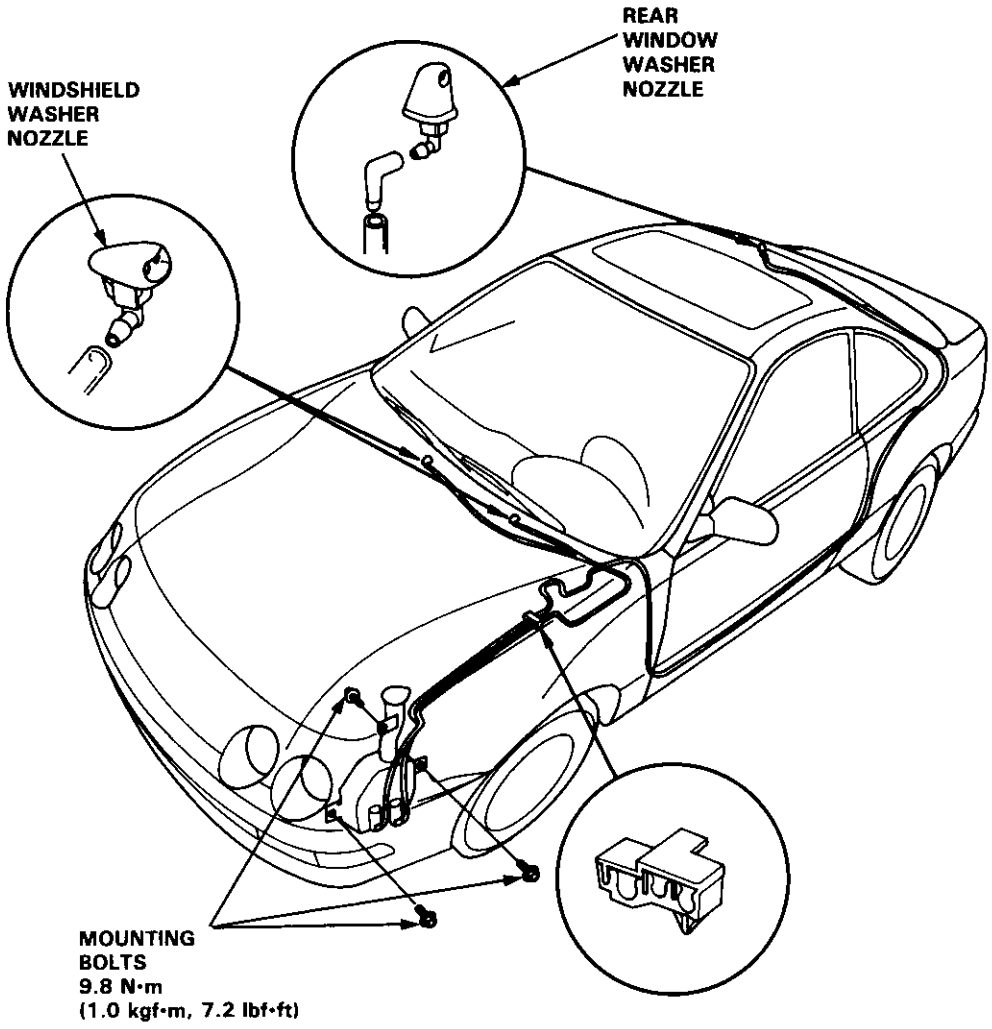

Supplemental Restraint System (SRS)

Component Location Index 23-266
Description 23-267
Circuit Diagram 23-268
Wiring Locations 23-270
Precautions/Procedures 23-271
Troubleshooting 23-276
Airbag Assembly
  Replacement 23-295
  Disposal 23-299
Cable Reel
  Replacement 23-301
Dash Sensor
  Replacement 23-305
SRS Unit
  Replacement 23-307

Supplemental Restraint System (SRS)

Component Location Index

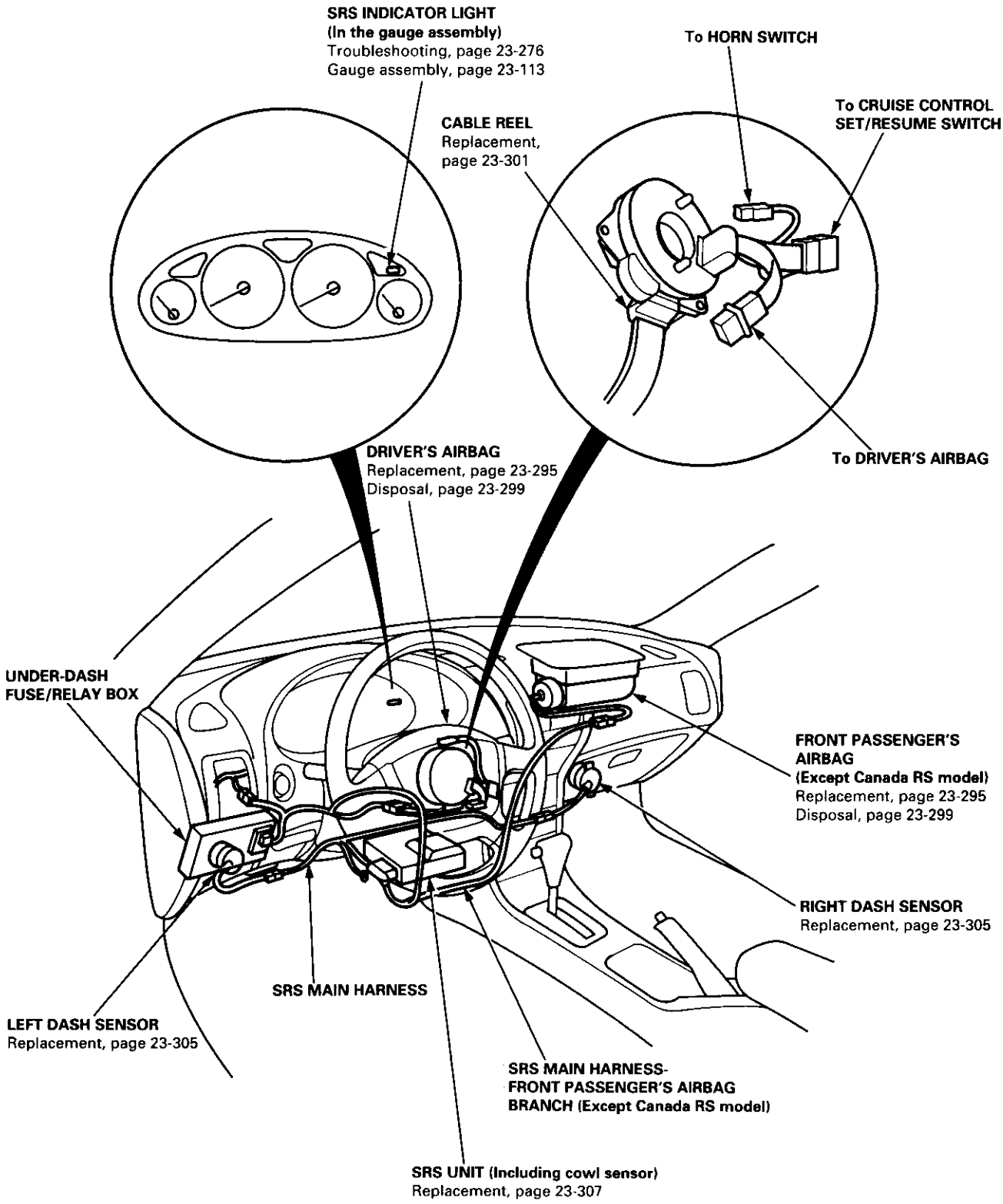

Supplemental Restraint System (SRS)

Circuit Diagram (Without Front Passenger's Airbag)

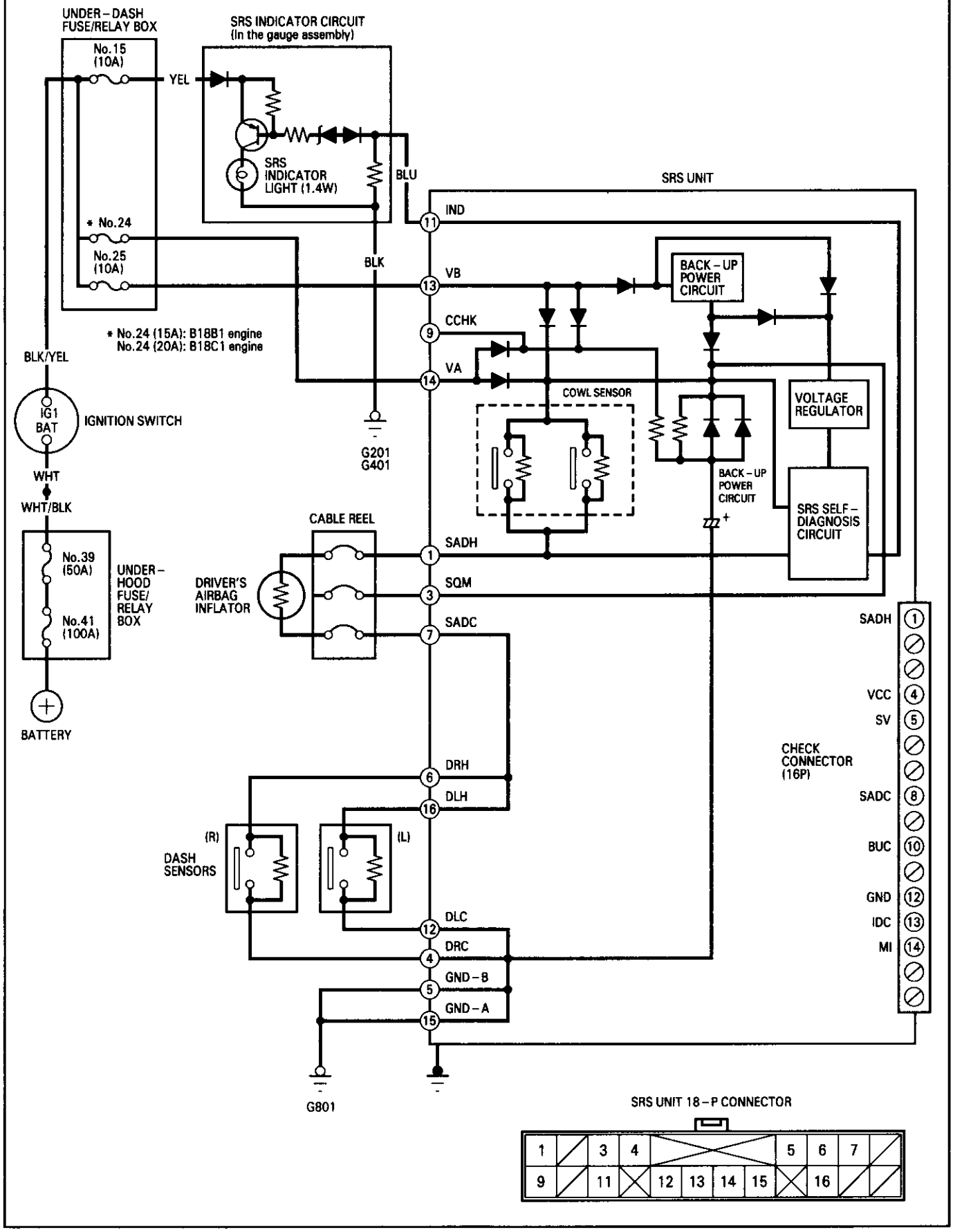

Circuit Diagram (With Front Passenger's Airbag)

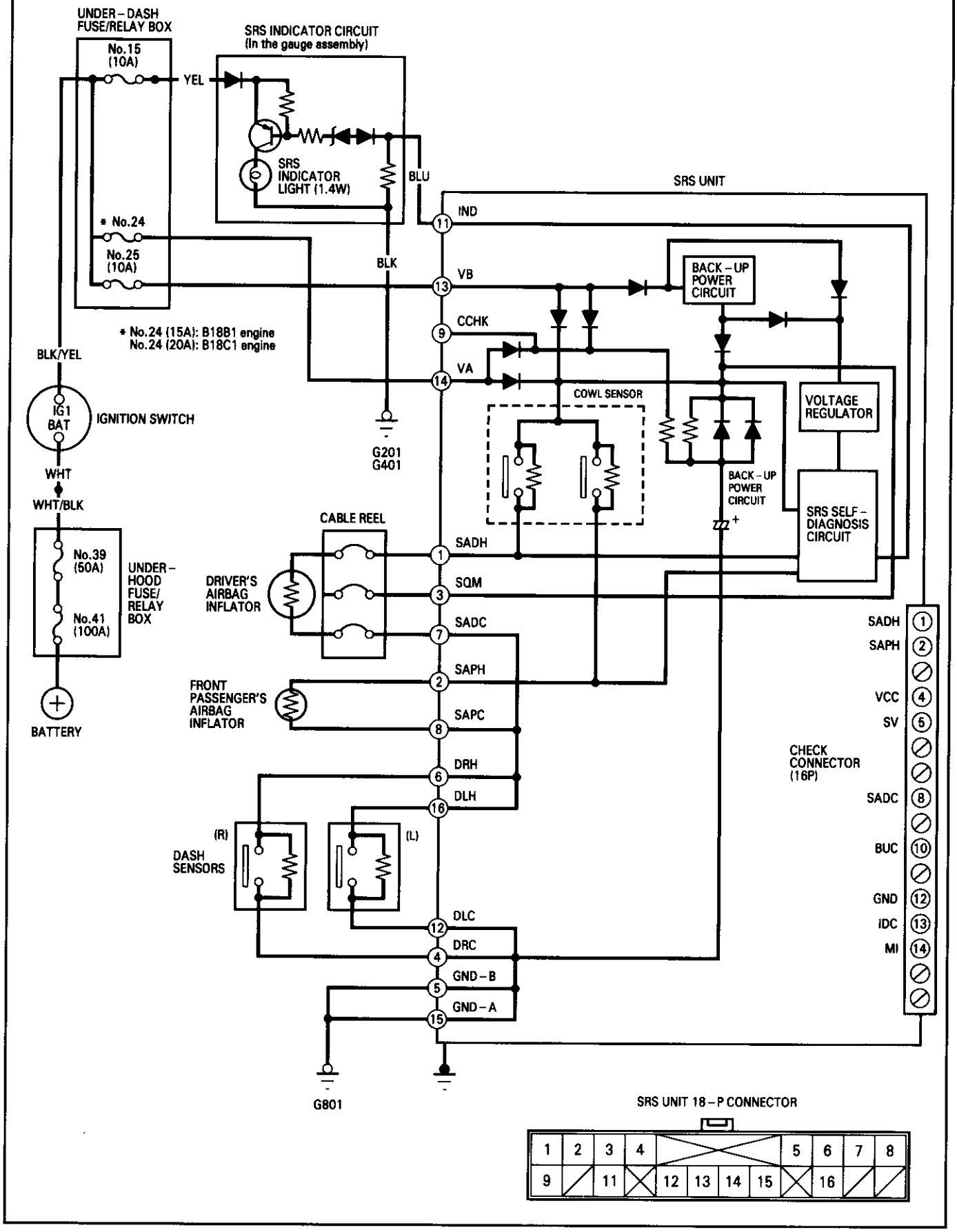

Wiring Locations

CAUTION: Make sure all SRS ground locations are clean and grounds are securely attached.

NOTE:
- All SRS electrical wiring harnesses are covered with yellow insulation.
- Replace the entire affected SRS harness assembly if it has an open circuit or damaged wiring.

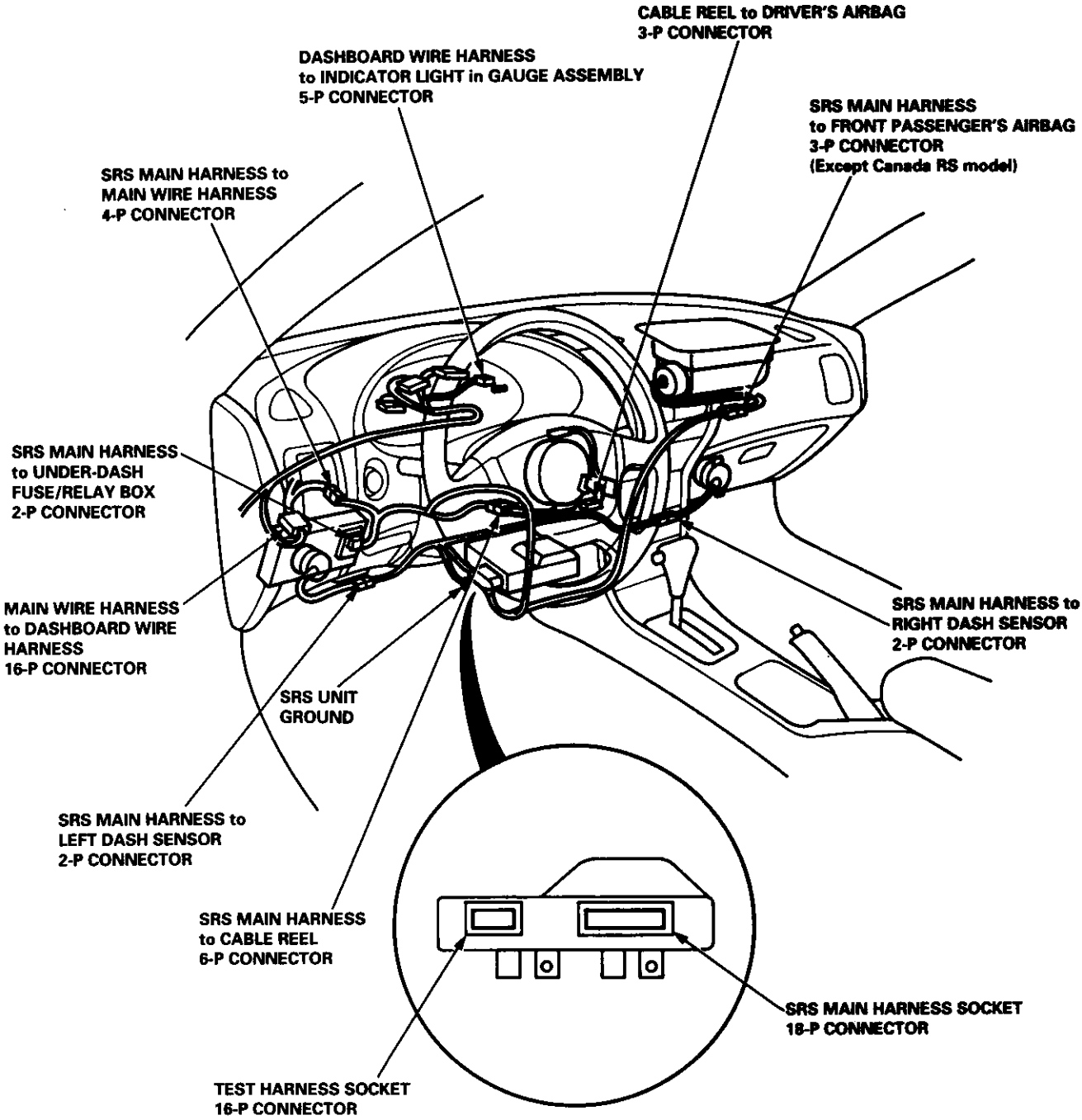

General Precautions

- Carefully inspect any SRS part before you install it. Do not install any part that shows signs of being dropped or improperly handled, such as dents, cracks or deformation:

  — Airbag assembly (driver's and front passenger's)
  — Dash sensors
  — Cable reel
  — SRS unit

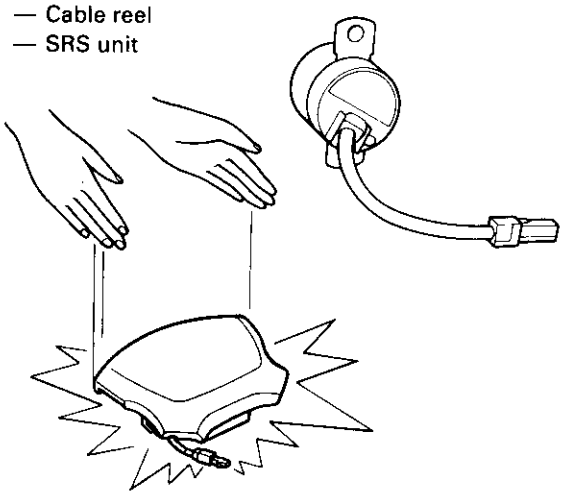

- Use only a digital multimeter to check the system. If it's not a Honda multimeter make sure its output is 10 mA (0.01 A) or less when switched to the smallest value in the ohmmeter range. A tester with a higher output could damage the airbag circuit or cause accidental deployment and possible injury.

- Do not install used SRS parts from another car. When making SRS repairs, use only new parts.

- Except when performing electrical inspections, always disconnect both the negative cable and positive cable at the battery before beginning work.

- Replacement of the combination light and wiper/washer switches and cruise control switch can be done without removing the steering wheel:

  — Combination light and wiper/washer switch replacement (see page 23-160).
  — Cruise control set/resume switch replacement (see page 23-249).

- The original radio has a coded theft protection circuit. Be sure to get the customer's code number before disconnecting the battery.

- When reinstalling the SRS unit cover, be sure it snaps together properly.

Airbag Handling and Storage

Do not try to disassemble the airbag assembly. It has no serviceable parts. Once an airbag has been operated (deployed), it cannot be repaired or reused.

For temporary storage of the airbag assembly during service, please observe the following precautions:

- Store the removed airbag assembly with the pad surface up.

⚠ WARNING If the airbag is improperly stored face down, accidental deployment could propel the unit with enough force to cause serious injury.

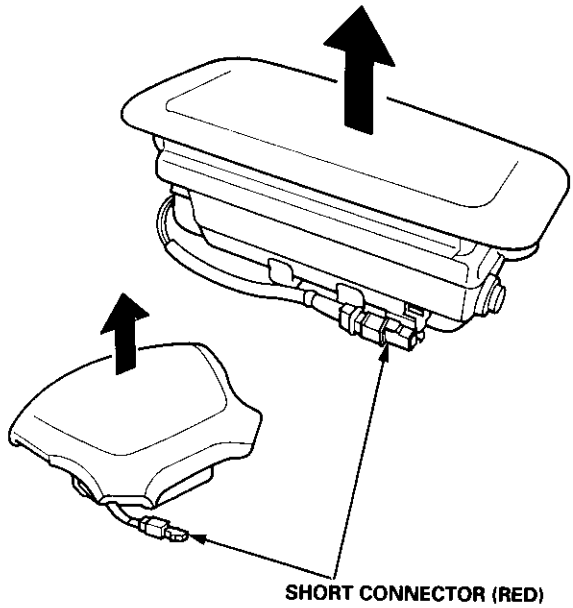

SHORT CONNECTOR (RED)

- Store the removed airbag assembly on a secure flat surface away from any high heat source (exceeding 212°F/100°C) and free of any oil, grease, detergent or water.

CAUTION: Improper handling or storage can internally damage the airbag assembly, making it inoperative. If you suspect the airbag assembly has been damaged, install a new unit and refer to the Deployment/Disposal Procedures for disposing of the damaged airbag.

Wiring Precautions

- Never attempt to modify, splice or repair SRS wiring.

NOTE: All SRS electrical wiring harnesses are covered with yellow insulation.

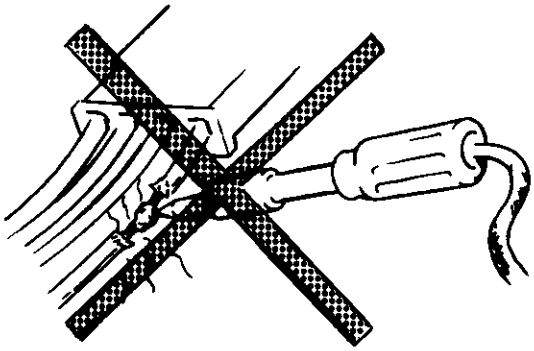

- Be sure to install the harness wires so that they are not pinched or interfering with other car parts.

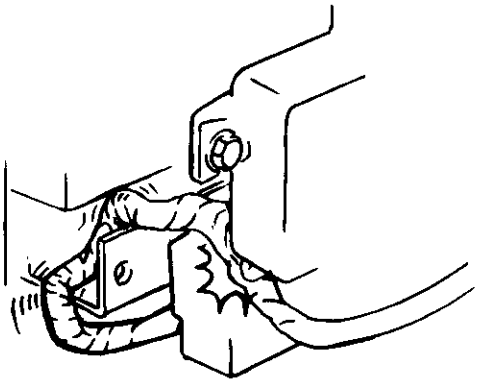

- Make sure all SRS ground locations are clean and grounds are securely fastened for optimum metal-to-metal contact. Poor grounding can cause intermittent problems that are difficult to diagnose.

Connecting the Short Connectors

⚠WARNING To avoid accidental deployment and possible injury, always install the protective short connector(s) on the driver's and passenger's airbag connector(s) before working near any SRS wiring.

NOTE: The original radio has a coded theft protection circuit. Be sure to get the customer's code number before disconnecting the battery cables.

1. Disconnect the battery negative cable, then disconnect the positive cable.

2. Connect the short connector(s) (RED):

Driver's Side:

- Remove the access panel from the steering wheel, then remove the short connector (RED) from the panel.

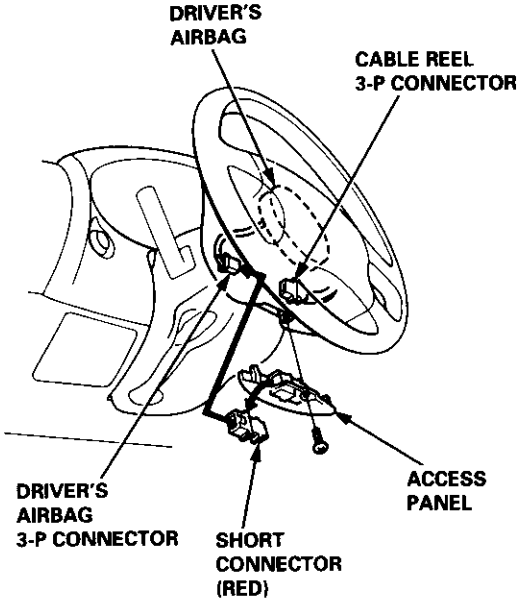

- Disconnect the 3-P connector between the driver's airbag and cable reel, then connect the short connector (RED) to the airbag side of the connector.

Front Passenger's Side:

- Remove the glove box damper (see section 20), and then remove the glove box.

- Disconnect the 3-P connector between the front passenger's airbag and the SRS main harness, then connect the short connector (RED) to the airbag side of the connector.

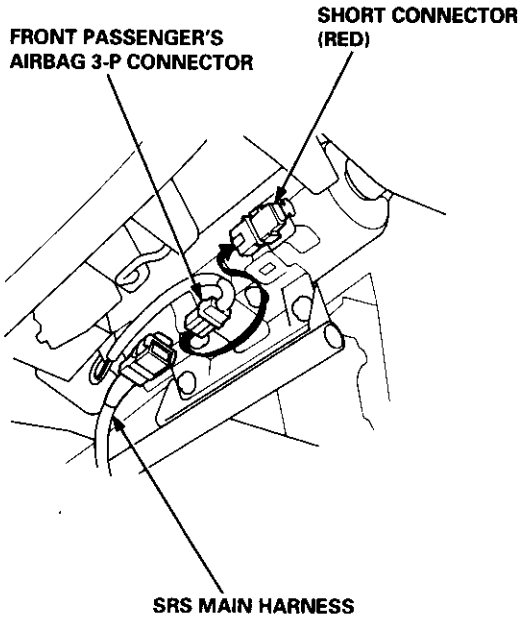

Disconnecting the SRS Connector at the Under-dash Fuse/relay Box:

CAUTION: Avoid breaking the connector; it's double-locked.

1. First lift the connector lid with a thin screwdriver, then press the connector tab down and pull the connector out.

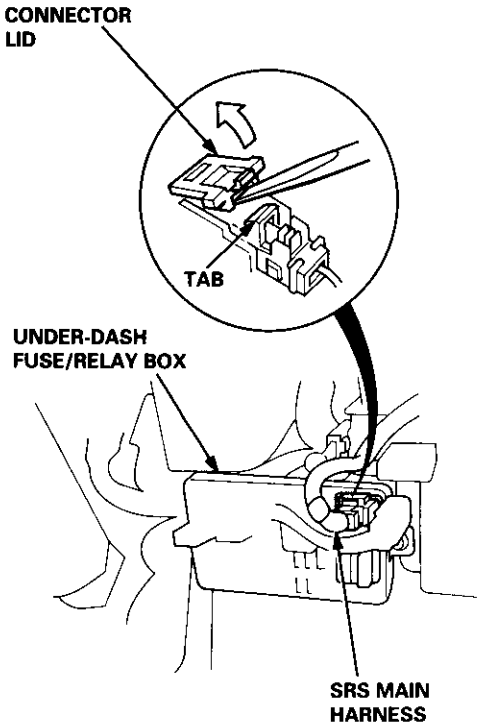

2. To reinstall the connector, push it into position until it clicks, then close its lid.

Steering-related Precautions

Steering Wheel and Cable Reel Alignment

NOTE: To avoid misalignment of the steering wheel or airbag on reassembly, make sure the wheels are turned straight ahead before removing the steering wheel.

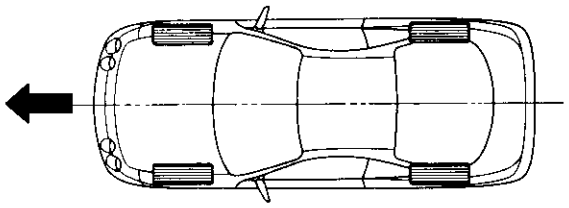

Rotate the cable reel clockwise unit it stops.
Then rotate it counterclockwise (approximately two turns) until:

— The yellow gear tooth lines up with the alignment mark on the cover.
— The arrow mark on the cable reel label points straight up.

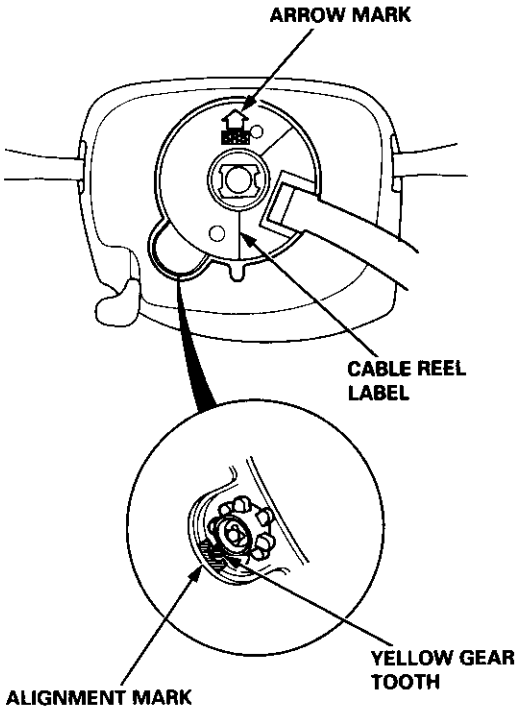

Steering Column Removal

CAUTION:

- **Before removing the steering column, first disconnect the connector between the cable reel and the SRS main harness.**
- **If the steering column is going to be removed without dismounting the steering wheel, lock the steering by turning the ignition key to 0-LOCK position or remove the key from the ignition so that the steering wheel will not turn.**

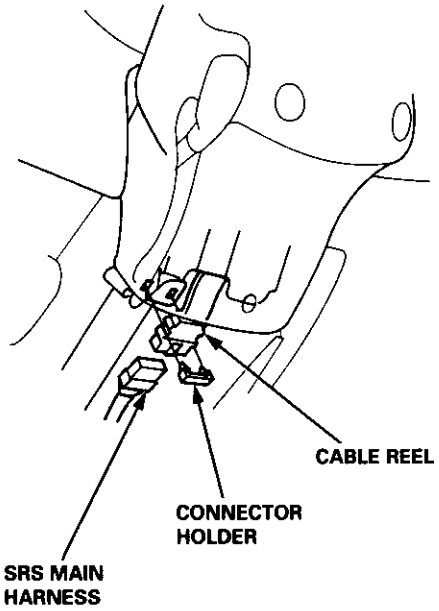

Do not replace the original steering wheel with any other design, since it will make it impossible to properly install the airbag (only use genuine Honda replacement parts).

After reassembly confirm that the wheels are still turned straight ahead and that the steering wheel spoke angle is correct. If minor spoke angle adjustment is necessary, do so only by adjustment of the tie-rods, not by removing and repositioning the steering wheel.

Sensor Inspection

CAUTION: Take extra care when painting or doing body work in the area below the dashboard.
Avoid direct exposure of the sensors or wiring to heat guns, welding, or spraying equipment.

⚠ WARNING

- **Disconnect both the negative and positive battery cables.**
- **Connect the short connector(s) before working below the dashboard or near the dash sensors.**

- After any degree of frontal body damage, inspect both dash sensors. Replace a sensor if it is dented, cracked, or deformed.

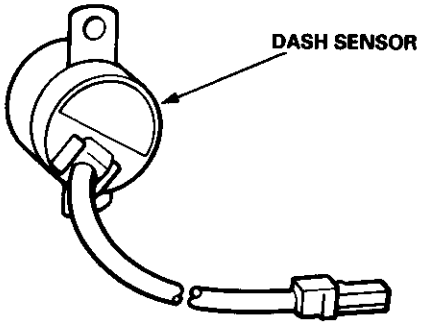

- Be sure the sensors are installed securely.

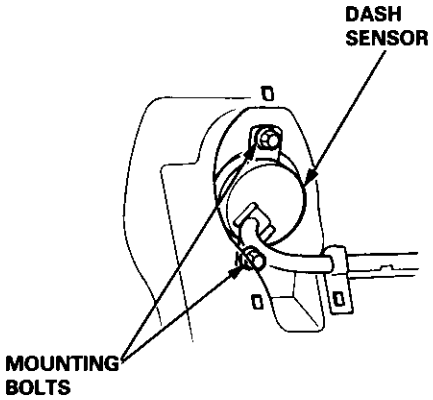

Inspection After Deployment

After a collision in which the airbags were deployed, inspect the following:

1. Inspect the dash sensors for physical damage. If the sensors are damaged, replace them.
2. Inspect all the SRS wire harnesses. Replace, don't repair, any damaged harnesses.
3. Inspect the cable reel for heat damage. If there is any damage, replace the cable reel.
4. After the car is completely repaired, turn the ignition switch on. If the SRS indicator light comes on for about six seconds and then goes off, the SRS system is OK. If the indicator light does not function properly, go to SRS Troubleshooting (next page).

Troubleshooting

Self-diagnosis Function

The SRS unit includes a self-diagnosis function. If there is a failure in the sensors, SRS unit, inflator, or their circuits, the SRS indicator light in the gauge assembly comes ON.

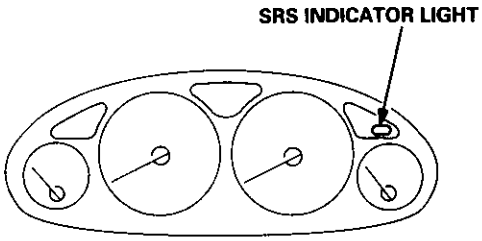

As a system check, the SRS indicator light also comes on when the ignition is first turned ON to the (II) position. If the light goes off after approximately six seconds, the system is OK.
If the SRS indicator light remains on (or fails to come on in the system check mode), one of the SRS components (or the wiring/connectors inbetween) is faulty.

Troubleshooting Precautions

- Always use the test harness. Do not use test probes directly on component connector terminals or wires; you may damage them or the SRS unit.
- When connecting any of the test harnesses to the system, push the connectors straight-in; do not bend the connector terminals.
- Before disconnecting any part of the SRS wire harness, connect the short connector (RED) on the driver's airbag. On cars equipped with a front passenger's airbag, connect short connectors on the driver's airbag and the front passenger's airbag.

SRS Indicator Light Troubleshooting

Possible conditions:

1. SRS indicator light does not come on at all – see page 23-278.
2. SRS indicator light stays on constantly – see page 23-282.
3. SRS indicator light comes on in combination with a failure of another electrical system (charging system light). Check for damage/corrosion at the under-dash fuse/relay box connector.

NOTE:

- Before starting the applicable troubleshooting, check the condition of all SRS connectors and ground points.
- If the fault is not found after completing the applicable troubleshooting, substitute a known-good SRS unit and check whether the indicator light goes off.

Connecting the Short Connectors

⚠ WARNING To avoid accidental deployment and possible injury, always connect the protective short connector to the driver's airbag connector and, on cars equipped with front passenger's airbag, connect protective short connectors to the driver's and front passenger's airbag before working near any SRS wiring.

NOTE: The original radio has a coded theft protection circuit. Be sure to get the customer's code number before disconnecting the battery cables.

1. Disconnect the battery negative cable, then disconnect the positive cable.
2. Connect the short connector(s) (RED):

Driver's Side:

- Remove the access panel from the steering wheel, then remove the short connector (RED) from the panel.

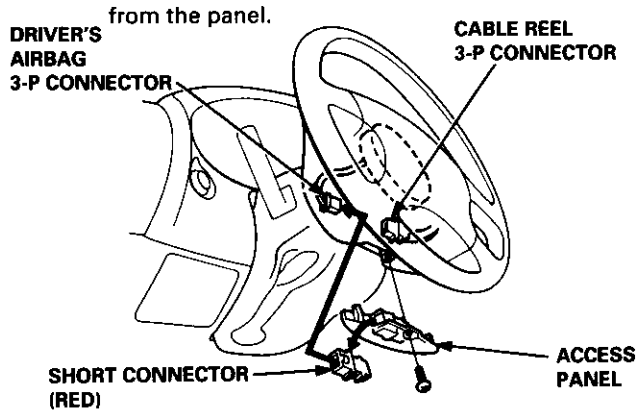

- Disconnect the connector between the driver's airbag and cable reel, then connect the short connector (RED) to the airbag side of the connector.

Front Passenger's Side:

- Remove the glove box damper (see section 20), and then remove the glove box.
- Disconnect the connector between the front passenger's airbag and SRS main harness, then connect the short connector (RED) to the airbag side of the connector.

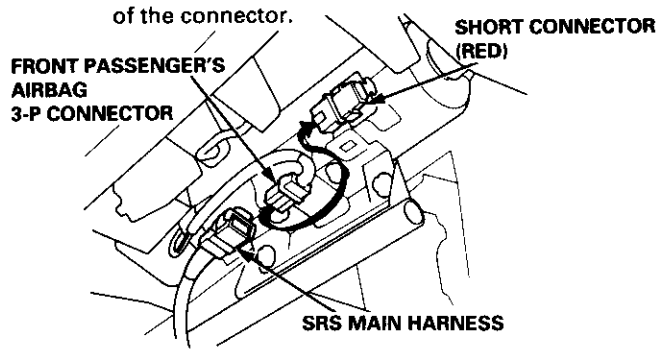

Test Harnesses and Attachment Points

Test Harness A

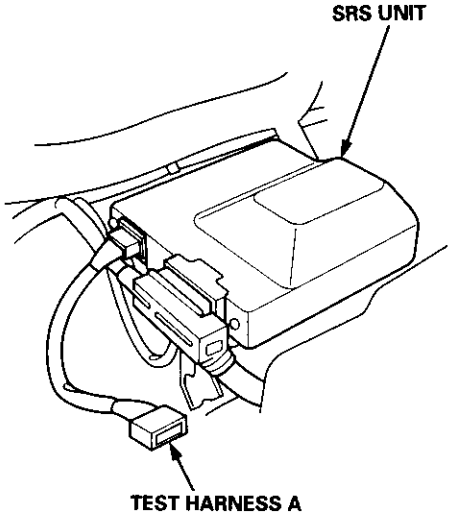

1	2	3	4	5	6	7	8
9	10	11	12	13	14	15	16

Test Harness B

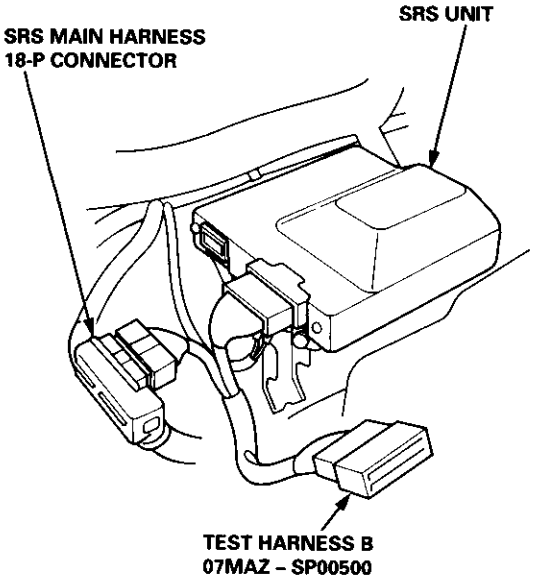

ROW A (SRS UNIT END)

A	1	2	3	4	5	6	7	8	9	10	11	12	13	14	15	16	17	18
B	1	2	3	4	5	6	7	8	9	10	11	12	13	14	15	16	17	18

ROW B (WIRE HARNESS END)

Test Harness C

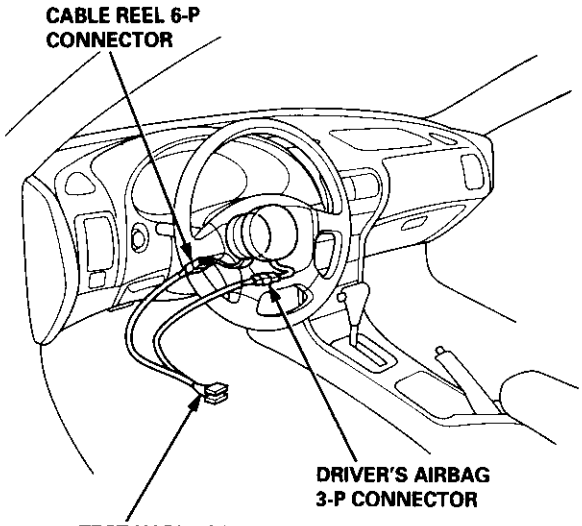

1	2	3	4
5	6	7	8

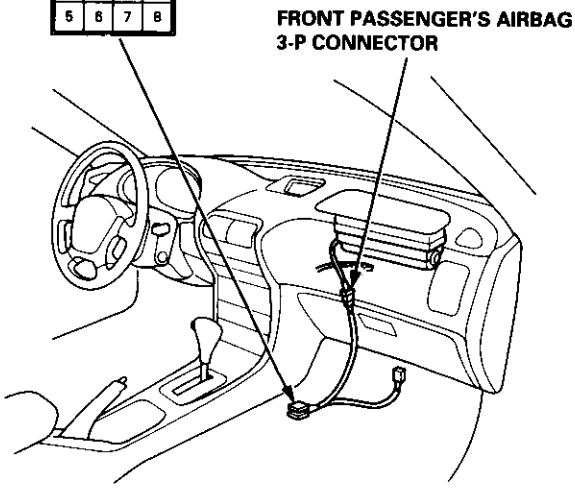

Test Harness D

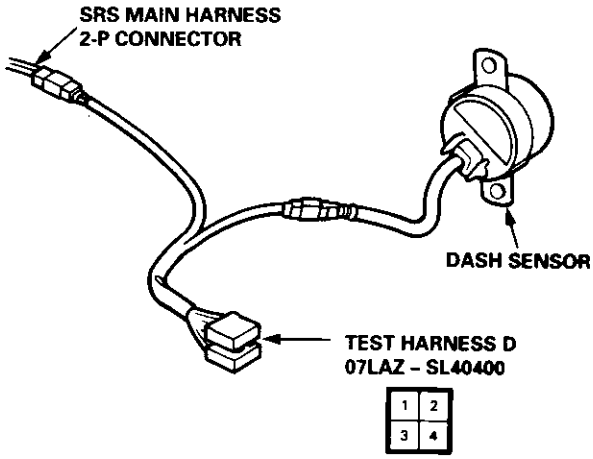

1	2
3	4

Troubleshooting

The SRS Indicator Does Not Light

CAUTION: Use only a digital multimeter to check the system. If it's not a Honda multimeter, make sure its output is 10 mA (0.01 A) or less when switched to the smallest value in the ohmmeter range. A tester with a higher output could damage the airbag circuit or cause accidental airbag deployment and possible injury.

NOTE: The original radio has a coded theft protection circuit. Be sure to get the customer's code number before disconnecting the battery cables.

Disconnect the battery negative cable and then the positive cable.
Connect the short connector(s) to the airbag(s) (see page 23-272).

Reconnect the battery positive cable and then the negative cable.

Turn the ignition switch ON (II).

Does the brake system light come on (in the gauge assembly)?

- NO → Inspect the No. 15 (10 A) fuse (under-dash fuse/relay box).
  - Is No. 15 fuse OK?
    - NO → **Replace the fuse.**
    - YES → **Repair open in dashboard wire harness between the No. 15 fuse and gauge assembly.**
- YES → Turn the ignition switch OFF.

Disconnect the SRS main harness 18-P connector from the SRS unit.

Turn the ignition switch ON (II).

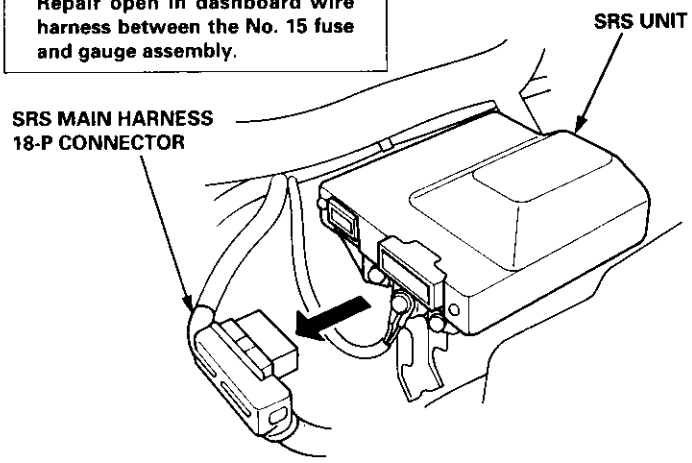

Does the SRS indicator light come on?

- YES → **The SRS unit is faulty.**
- NO → Turn the ignition switch OFF.

(To page 23-279)

(From page 23-278)

Disconnect the SRS main harness 4-P connector from the main wire harness.

Turn the ignition switch ON (II).

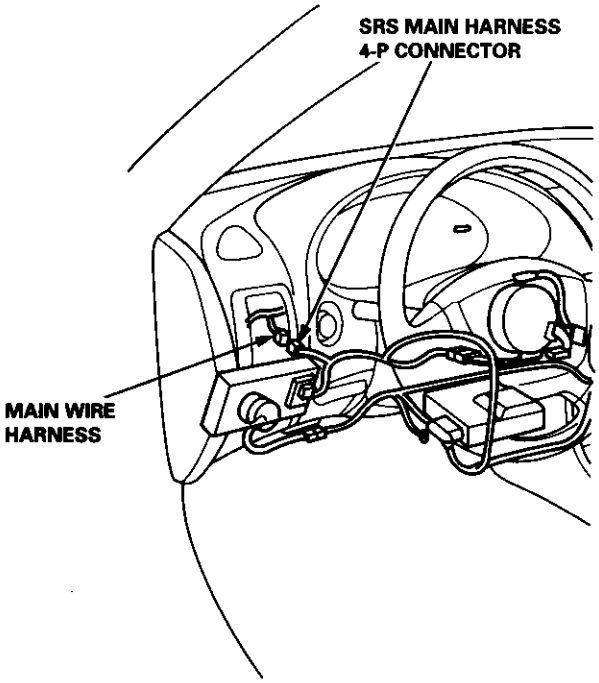

Does the SRS indicator light come on?

YES → **The SRS main harness is faulty.**

NO

Turn the ignition switch OFF.

Remove the gauge assembly then inspect the SRS indicator light bulb.

Is the SRS indicator light bulb OK?

NO → **Replace the indicator light bulb.**

YES

Connect a voltmeter between the No. 5 terminal (+) of the 5-P connector and body ground (–).

Turn the ignition switch ON (II).

Measure the voltage between the No. 5 terminal and body ground.

(To page 23-280)

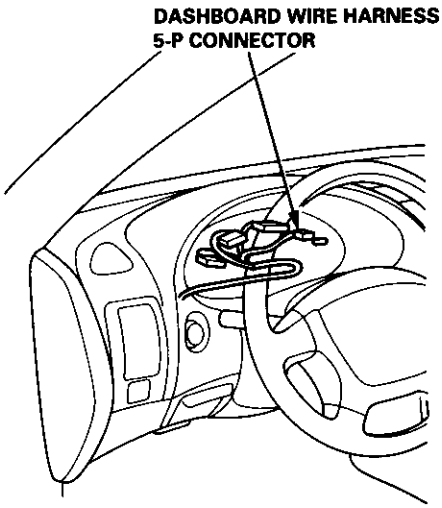

View from wire side.

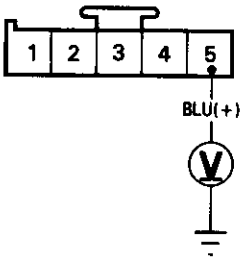

(cont'd)

Troubleshooting (cont'd)

(From page 23-279)

Is there less than 8.5 V ?

NO → **Short in BLU wire of the dashboard wire harness. Replace the dashboard wire harness.**

YES

Turn the ignition switch OFF

Connect the voltmeter between the No. 1 terminal (+) and the No. 3 terminal (–) of the dashboard wire harness 5-P connector.

Turn the ignition switch ON (II).

Measure the voltage between the No. 1 terminal and the No. 3 terminal.

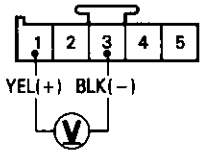

View from wire side.

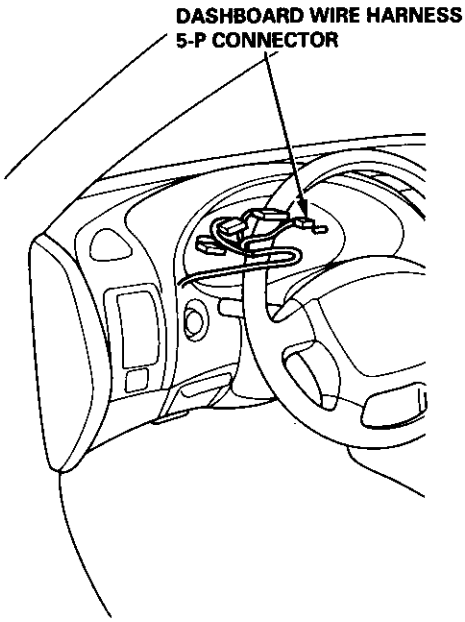

Is there battery voltage?

NO → Check for continuity between the No. 3 terminal and body ground.

Does continuity exist?

NO → **Repair open in the BLK wire (No. 3 terminal) between the gauge assembly and body ground or look for a poor ground (G201, G401).**

YES → **Repair open in the YEL wire (No. 1 terminal) of the dashboard wire harness between the gauge assembly and the No. 15 (10 A) fuse.**

YES

Turn the ignition switch OFF.

(To page 23-281)

(From page 23-280)

Reconnect each connector to the gauge assembly and SRS unit then connect Test Harness A to the SRS unit.

Turn the ignition ON (II) and measure the voltage between the No. 13 terminal (+) and body ground (–) for six seconds.

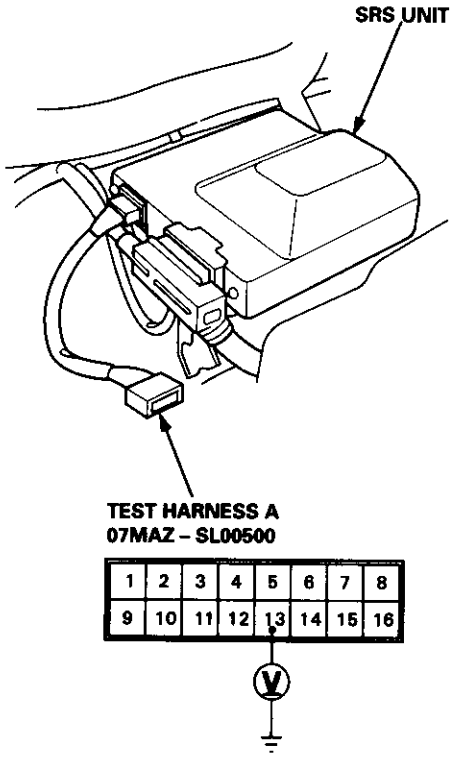

Is there more than 8.5 V?

NO → **SRS indicator circuit (in the gauge assembly) is faulty.**

YES → **SRS unit is faulty.**

(cont'd)

Troubleshooting (cont'd)

SRS Indicator Light Stays on Continuously

NOTE: Before troubleshooting, make sure that battery voltage is 12 V or more. Otherwise you'll obtain wrong test readings.

1. Make a photocopy of the chart on page 23-283.

2. Connect Test Harness A to the SRS unit as shown.

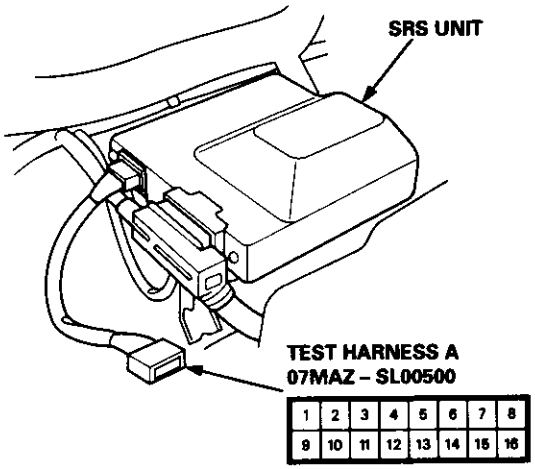

3. Turn the ignition switch ON (II).

   - Voltages in the chart assume the car's "battery voltage" is about 12 volts. Less than 12 volts will result in different or possibly false readings.
   - Do not disconnect the airbags from the circuit when checking SRS unit voltages.

4. First, check for voltage between Test Harness Terminal No. 12 (+) and ground (–).

   - If no voltage is indicated, go to step 8 and continue checking all the other terminals.
   - If voltage is indicated, there is a poor ground at the SRS unit. Read the following NOTE, and then go on to step 5.

NOTE: The original radio has a coded theft protection circuit. Be sure to get the customer's code number before disconnecting the battery cables.

5. Before disconnecting any part of the SRS wire harness, connect the short connector(s) (RED) to the airbag(s) (see page 23-272).

6. Connect Test Harness B between the SRS unit and SRS main harness 18-P connector.

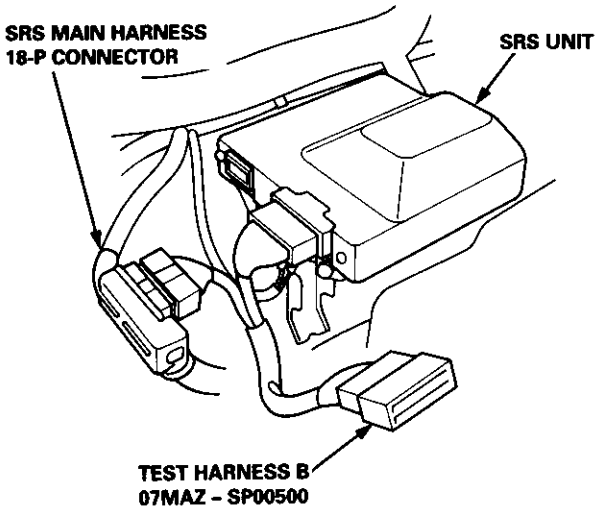

7. Check for continuity between the B5 terminal and body ground, and the B15 terminal and body ground.

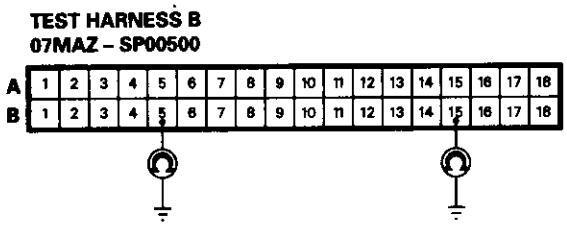

   - If there is continuity at either terminal, the SRS unit is faulty. Replace it and check the voltages according to the chart on page 23-283.
   - If there is no continuity at either terminal, the SRS unit ground, the SRS unit component grounds or the SRS main harness is faulty. Check the grounds (check wire and control unit mounting bolts) and, if necessary, replace the SRS main harness. Then check the voltages according to the chart on page 23-283.

8. Record your voltage readings, for each terminal, in the row of blank boxes near the top of the chart.

9. Compare each reading with the voltage ranges listed in the column below it. If the reading is within a range, circle that range.

	0	0	–	4.5 –5.5	12.0 –14.3	–
	8.6 –11.3	8.6 –11.3	–	4.5 –5.5	12.0 –14.3	–
Failure Mode Voltage	5.7 –7.4	5.7 –7.4	–	4.5 –5.5	12.0 –14.3	–
	8.6 –11.3	2.9 –3.7	–	4.5 –5.5	12.0 –14.3	–
	2.9 –3.7	8.7 –11.2	–	4.5 –5.5	12.0 –14.3	–

Circle the range if your reading is within it.

- If you circled all the Failure Mode ranges across any row, check the car for the Probable Failure Mode listed at the end of the row. (Refer to the letter for that mode on the following pages).

2.0 –8.5	8.4 –10.9	–	–	B	• Short in one dash sensor • Short to driver's or passenger's airbag inflator (body grond)
2.0 –8.5	8.4 –10.9	–	–	C	Short in cowl sensor or open in both dash sensors
2.0 –8.5	8.4 –10.9	–	–	D	Open in one dash sensor
2.0 –8.5	8.4 –10.9	–	–	E	Open in driver's airbag inflator or cable reel
2.0 –8.5	8.4 –10.9	–	–	F	Open in front passenger's airbag inflator

If you circled all the ranges in this row, follow the troubleshooting procedure under failure mode "C" on the following pages.

- If you did not circle all the ranges across any row, replace the SRS unit with a known-good unit, and retest.
  - — If all your voltage readings are now normal, replace the original SRS unit.
  - — If your voltage readings are still not normal but they don't fit within a complete row of Failure Mode ranges, check the condition of the terminals in each of the SRS connectors shown in the system diagram on page 23-270.

NOTE: Do not disconnect the airbag when checking SRS unit voltages.

With front passenger's airbag:

Test Harness Terminal	1 SADH	2 SAPH	–	4 VCC	5 SV	–	–	8 SADC	–	10 BUC1	–	12 GND	13 IDC	14 MI	–	–	Probable Failure Mode
Normal Voltage	4.3 –5.6	4.3 –5.6	–	4.5 –5.5	12.0 –14.3	–	–	5.6 –7.3	–	11.5 –14.5	–	0	8.5 –13.6	8.4 –10.9	–	–	
Your Voltage Reading		–	–			–	–		–		–				–	–	
Failure Mode Voltage	2.8 –3.7	2.8 –3.7	–	4.5 –5.5	12.0 –14.3	–	–	3.7 –4.9	–	11.5 –14.5	–	0	2.0 –8.5	8.4 –10.9	–	–	A Open in one cowl sensor contact
	0	0	–	4.5 –5.5	12.0 –14.3	–	–	0	–	11.5 –14.5	–	0	2.0 –8.5	8.4 –10.9	–	–	B • Open in both cowl sensor contacts • Short in one dash sensor • Short to driver's or passenger's airbag inflator (body grond)
	8.6 –11.3	8.6 –11.3	–	4.5 –5.5	12.0 –14.3	–	–	11.2 –14.6	–	11.5 –14.5	–	0	2.0 –8.5	8.4 –10.9	–	–	C Short in cowl sensor or open in both dash sensors
	5.7 –7.4	5.7 –7.4	–	4.5 –5.5	12.0 –14.3	–	–	7.4 –9.7	–	11.5 –14.5	–	0	2.0 –8.5	8.4 –10.9	–	–	D Open in one dash sensor
	8.6 –11.3	2.9 –3.7	–	4.5 –5.5	12.0 –14.3	–	–	3.7 –4.9	–	11.5 –14.5	–	0	2.0 –8.5	8.4 –10.9	–	–	E Open in driver's airbag inflator or cable reel
	2.9 –3.7	8.7 –11.2	–	4.5 –5.5	12.0 –14.3	–	–	3.7 –4.9	–	11.5 –14.5	–	0	2.0 –8.5	8.4 –10.9	–	–	F Open in front passenger's airbag inflator
	8.6 –11.3	8.6 –11.3	–	4.5 –5.5	12.0 –14.3	–	–	0	–	11.5 –14.5	–	0	2.0 –8.5	8.4 –10.9	–	–	G Open in driver's and passenger's airbag inflator
	4.3 –5.6	4.3 –5.6	–	0	0	–	–	5.6 –7.3	–	11.5 –14.5	–	0	2.0 –8.5	8.4 –10.9	–	–	H Blown SRS fuse (No. 25 10 A) or open in the wire
	4.3 –5.6	4.3 –5.6	–	4.5 –5.5	12.0 –14.3	–	–	5.6 –7.3	–	11.5 –14.5	–	0	0 (8.5 –13.6)	8.4 –10.9	–	–	I Short (or open) in SRS indicator wire harness

Troubleshooting (cont'd)

NOTE: Do not disconnect the airbag when checking SRS unit voltages.

Without front passenger's airbag:

Test Harness Terminal	1 SADH	–	–	4 VCC	5 SV	–	–	8 SADC	–	10 BUC1	–	12 GND	13 IDC	14 MI	–	–	Probable Failure Mode
Normal Voltage	4.3 –5.6	–	–	4.5 –5.5	12.0 –14.3	–	–	5.6 –7.3	–	11.5 –14.5	–	0	8.5 –13.6	8.4 –10.9	–	–	
Your Voltage Reading		–	–			–	–		–		–				–	–	
Failure Mode Voltage	2.8 –3.7	–	–	4.5 –5.5	12.0 –14.3	–	–	3.7 –4.9	–	11.5 –14.5	–	0	2.0 –8.5	8.4 –10.9	–	–	A Open in one cowl sensor contact
	0	–	–	4.5 –5.5	12.0 –14.3	–	–	0	–	11.5 –14.5	–	0	2.0 –8.5	8.4 –10.9	–	–	B • Open in both cowl sensor contacts • Short in one dash sensor • Short to driver's airbag inflator (body grond)
	8.6 –11.3	–	–	4.5 –5.5	12.0 –14.3	–	–	11.2 –14.6	–	11.5 –14.5	–	0	2.0 –8.5	8.4 –10.9	–	–	C Short in cowl sensor or open in both dash sensors
	5.7 –7.4	–	–	4.5 –5.5	12.0 –14.3	–	–	7.4 –9.7	–	11.5 –14.5	–	0	2.0 –8.5	8.4 –10.9	–	–	D Open in one dash sensor
	8.6 –11.3	–	–	4.5 –5.5	12.0 –14.3	–	–	3.7 –4.9	–	11.5 –14.5	–	0	2.0 –8.5	8.4 –10.9	–	–	E Open in driver's airbag inflator or cable reel
	4.3 –5.6	–	–	0	0	–	–	5.6 –7.3	–	11.5 –14.5	–	0	2.0 –8.5	8.4 –10.9	–	–	H Blown SRS fuse (No. 25 10 A) or open in the wire
	4.3 –5.6	–	–	4.5 –5.5	12.0 –14.3	–	–	5.6 –7.3	–	11.5 –14.5	–	0	0 (8.5 –13.6)	8.4 –10.9	–	–	I Short (or open) in SRS indicator wire harness

Mode A: Open in one cowl sensor contact

- The SRS unit is faulty. Substitute a known-good SRS unit and recheck the voltages according to the chart on page 23-283.

Mode B:

- **Short to driver's or passenger's airbag inflator body (body ground)**
- **Short in dash sensor**
- **Open in both cowl sensor contacts**

NOTE: The original radio has a coded theft protection circuit. Be sure to get the customer's code number before disconnecting the battery cables.

1. Disconnect the battery negative cable and then the positive cable. Then connect the short connectors(s) (RED) to the airbag(s) (see page 23-272).
2. Connect Test Harness B between the SRS unit and SRS main harness 18-P connector.

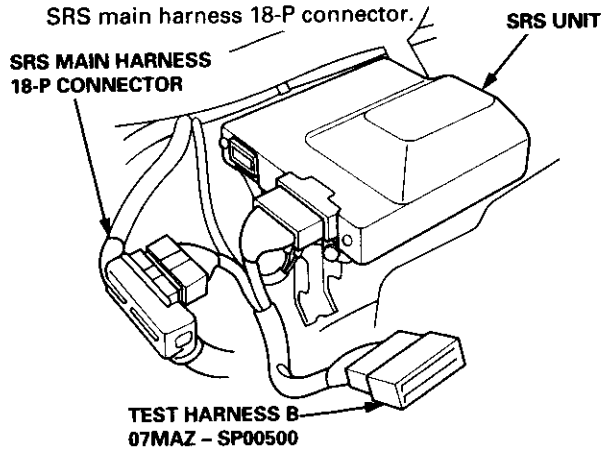

3. Reconnect the driver's airbag connector, then check continuity between the B1 terminal and body ground, and between the B7 terminal and body ground.

TEST HARNESS B
07MAZ – SP00500

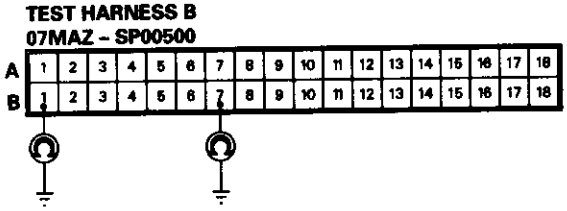

- If there is continuity at either terminal, go to step 6.
- If there is no continuity at either terminal,
  — go to step 5 (without front passenger's airbag).
  — go to step 4 (with front passenger's airbag).

4. Reconnect the front passenger's airbag connector, then check continuity between the B2 terminal and body ground, and between the B8 terminal and body ground.

TEST HARNESS B
07MAZ – SP00500

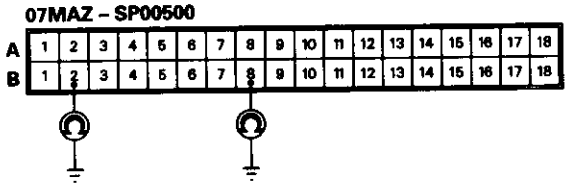

- If there is continuity at either terminal, go to step 10.
- If there is no continuity at either terminal, go to step 5.

5. Check continuity between body ground and each terminal of both dash sensors.

TEST HARNESS B
07MAZ – SP00500

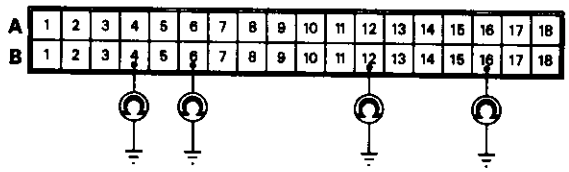

- If there is continuity at any of the terminals, go to step 12.
- If there is no continuity at any terminal, go to step 13.

6. Disconnect the cable reel 6-P connector from the SRS main harness, then connect Test Harness C only to the cable reel side of the 6-P connector.

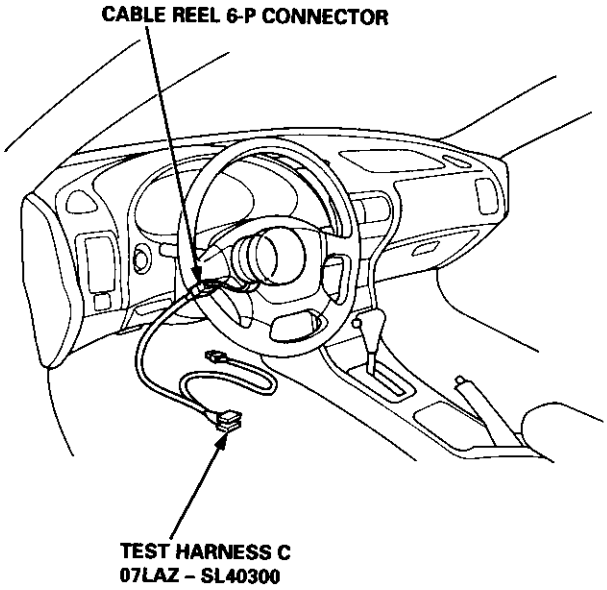

7. Check continuity between the No. 4 terminal and body ground, and between the No. 5 terminal and body ground.

TEST HARNESS C
07LAZ – SL40300

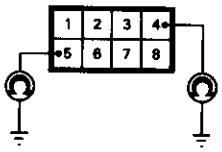

- If there is continuity at either terminal, go to step 8.
- If there is no continuity at either terminal, the SRS main harness is faulty. Replace it and re-check the voltages according to the chart on page 23-283.

(cont'd)

Troubleshooting (cont'd)

8. Disconnect the driver's airbag 3-P connector from the cable reel, then connect Test Harness C to the driver's airbag 3-P connector.

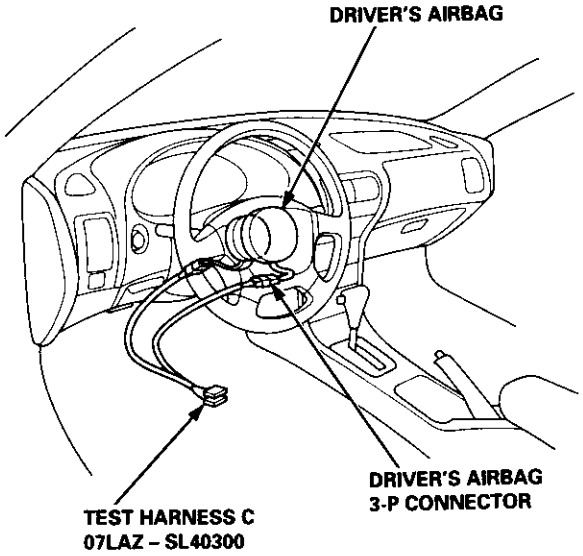

9. Check continuity between the No. 7 terminal and body ground, and between the No. 8 terminal and body ground.

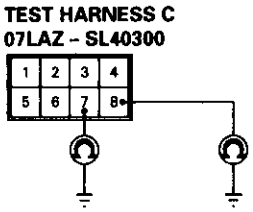

- If there is continuity at either terminal, the driver's airbag inflator is faulty. Replace it and recheck the voltages according to the chart on page 23-283.
- If there is no continuity at either terminal, the cable reel is faulty. Replace it and recheck the voltages according to the chart on page 23-283.

10. Disconnect the front passenger's airbag 3-P connector from the SRS main harness, then connect Test Harness C to the airbag side of the connector.

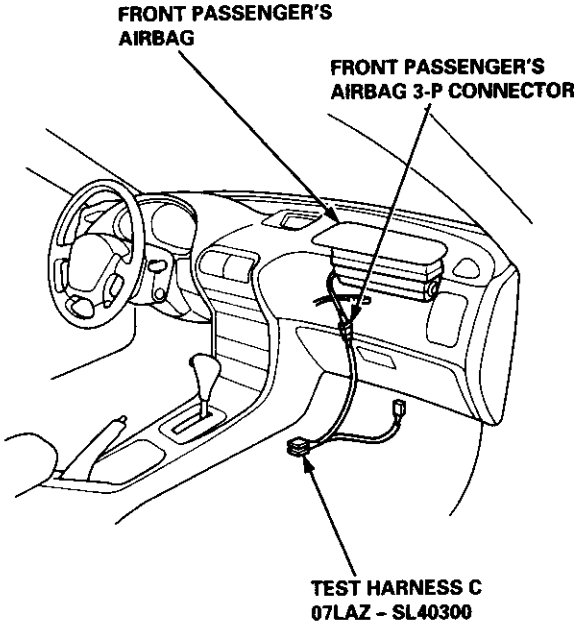

11. Check continuity between the No. 7 terminal and body ground, and between the No. 8 terminal and body ground.

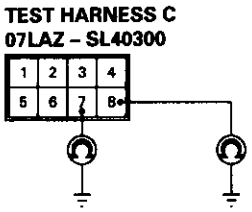

- If there is continuity at either terminal, the front passenger's airbag inflator is faulty. Replace it and recheck the voltages according to the chart on page 23-283.
- If there is no continuity at either terminal, the SRS main harness is faulty. Replace it and recheck the voltages according to the chart on page 23-283.

12. Connect Test Harness D between the dash sensor and SRS main harness 2-P connector. Check continuity between the No. 1 terminal and body ground, and between the No. 2 terminal and body ground.

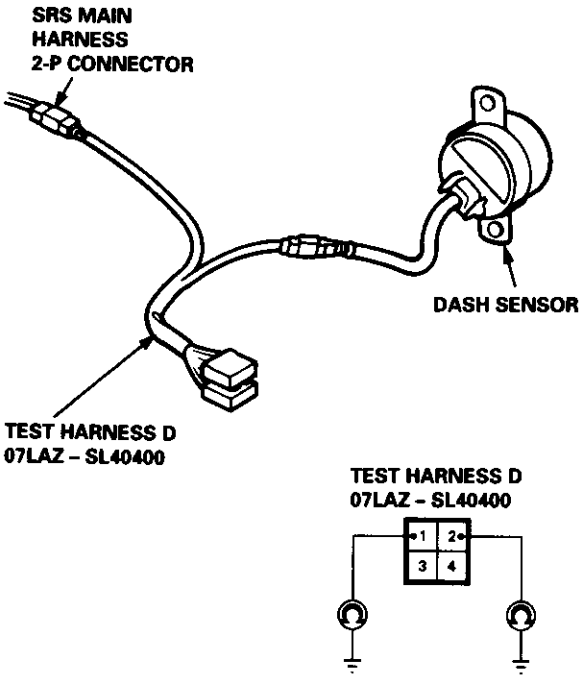

- If there is continuity at either terminal, the dash sensor is faulty. Replace it and recheck the voltages according to the chart on page 23-283.
- If there is no continuity at either terminal, the SRS main harness is faulty. Replace it and recheck the voltages according to the chart on page 23-283.

13. Measure the resistance between the left dash sensor terminals B12 and B16, and between the right dash sensor terminals B4 and B6.

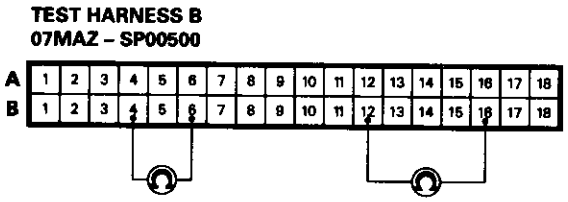

- If resistance is 3.8 – 4.2 kΩ for both sensors, the SRS unit is faulty. Substitute a known-good SRS unit and recheck the voltages according to the chart on page 23-283.
- If resistance is less than 3.8 kΩ for either sensor, go to step 14.

14. Connect Test Harness D between the dash sensor and SRS main harness 2-P connector. Measure the resistance between the No. 1 terminal and No. 2 terminal.

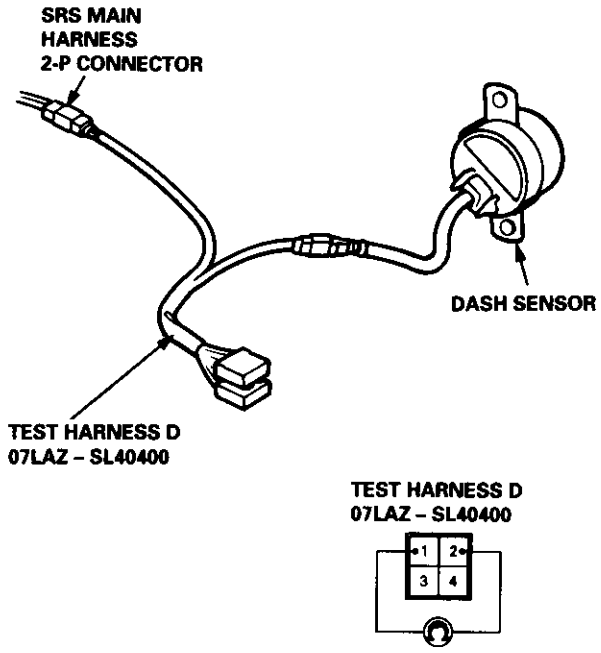

- If resistance is 3.8 – 4.2 kΩ, the SRS main harness is faulty. Replace it and recheck the voltages according to the chart on page 23-283.
- If resistance is less than 3.8 kΩ, the dash sensor is faulty. Replace it and recheck the voltages according to the chart on page 23-283.

(cont'd)

Troubleshooting (cont'd)

Mode C: Short in one cowl sensor, or open in both dash sensors
Mode D: Open in one dash sensor

NOTE: The original radio has a coded theft protection circuit. Be sure to get the customer's code number before disconnecting the battery cables.

1. Disconnect the battery negative cable and then the positive cable. Then connect the short connector(s) to the airbag(s) (see page 23-272).

2. Connect Test Harness B between the SRS unit and SRS main harness 18-P connector.

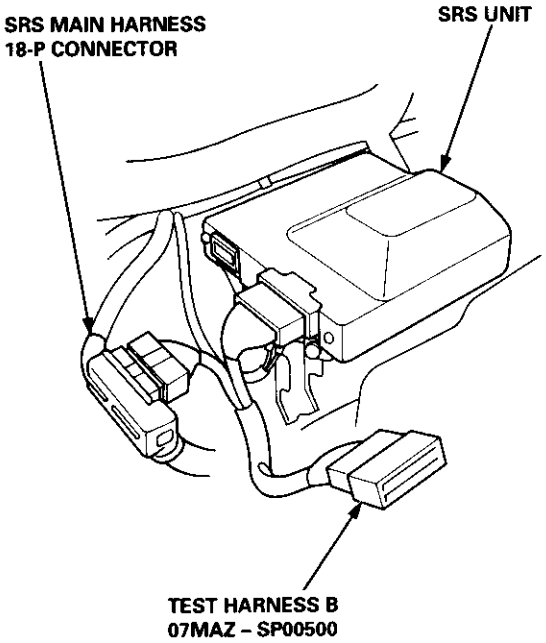

3. Measure the resistance between the left dash sensor terminals B12 and B16, and between the right dash sensor terminals B4 and B6.

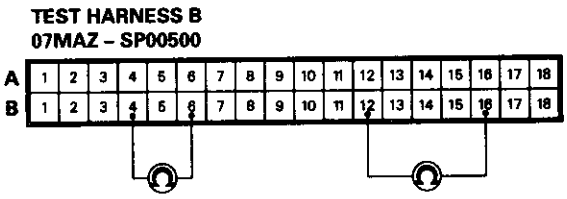

- If resistance is more than 5 kΩ for either set of terminals, go to step 4.

- If resistance is less than 5 kΩ for both sets of terminals, the SRS unit is faulty. Substitute a known-good SRS unit and recheck the voltages according to the chart on page 23-283.

4. Connect Test Harness D between the dash sensor and SRS main harness 2-P connector.
   Measure the resistance between the No. 1 terminal and No. 2 terminal.

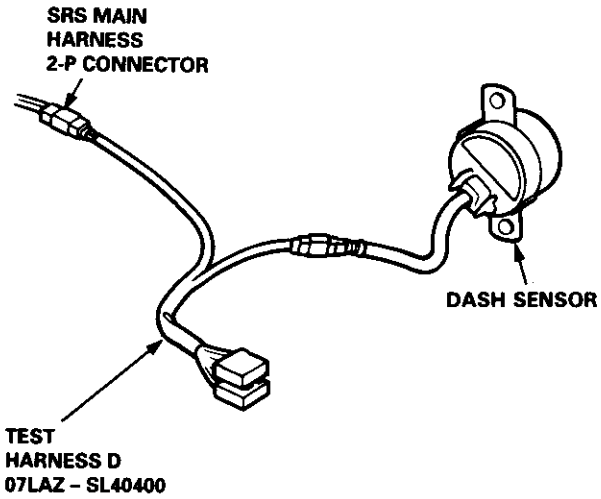

- If resistance is more than 5 kΩ, the dash sensor is faulty. Replace the dash sensor and recheck the voltages according to the chart on page 23-283.
- If resistance is less than 5 kΩ, the SRS main harness is faulty. Replace the SRS main harness and recheck the voltages according to the chart on page 23-283.

Mode E: Open in driver's airbag inflator or cable reel

NOTE: The original radio has a coded theft protection circuit. Be sure to get the customer's code number before disconnecting the battery cables.

1. Disconnect the battery negative cable and then the positive cable. Then connect the short connector(s) (RED) to the airbag(s) (see page 23-272).
2. Connect Test Harness B between the SRS unit and SRS main harness 18-P connector.

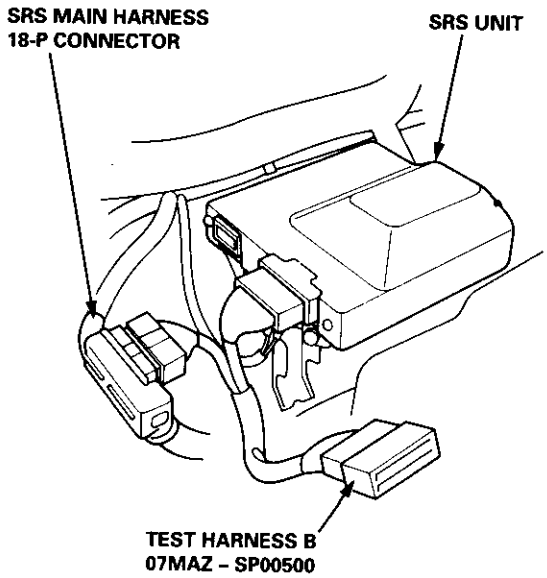

3. Reconnect the driver's airbag connector, then measure the resistance between the B1 and the B7 terminals.

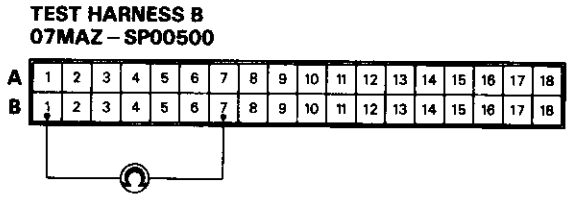

- If resistance is more than 0.2 kΩ, go to step 4.
- If resistance is less than 0.2 kΩ, the SRS unit is faulty. Substitute a known-good SRS unit and recheck the voltages according to the chart on page 23-283.

(cont'd)

Troubleshooting (cont'd)

4. Disconnect the cable reel 6-P connector from the SRS main harness, then connect Test Harness C only to the cable reel side of the connector.

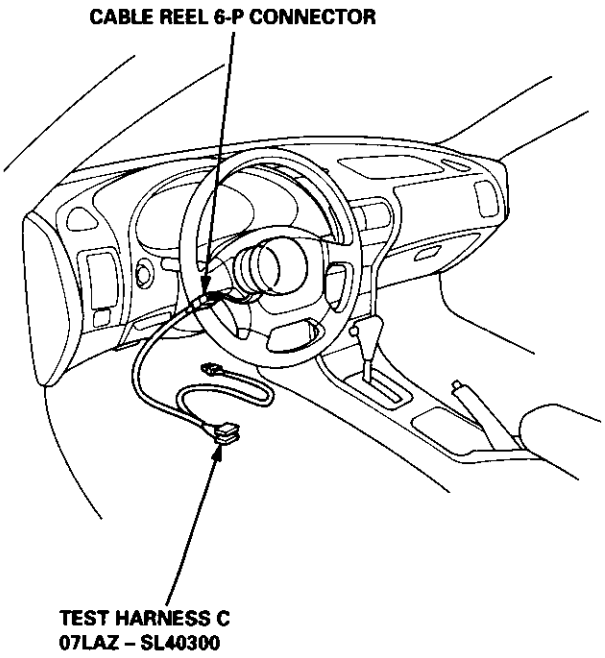

5. Measure the resistance between the No. 4 terminal and the No. 5 terminal.

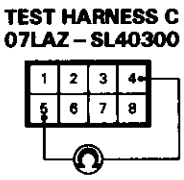

- If resistance is more than 0.2 kΩ, go to step 6.
- If resistance is less than 0.2 kΩ, the SRS main harness is faulty. Replace it and recheck the voltages according to the chart on page 23-283.

6. Disconnect the driver's airbag 3-P connector from the cable reel harness, then connect Test Harness C to the driver's airbag 3-P connector.

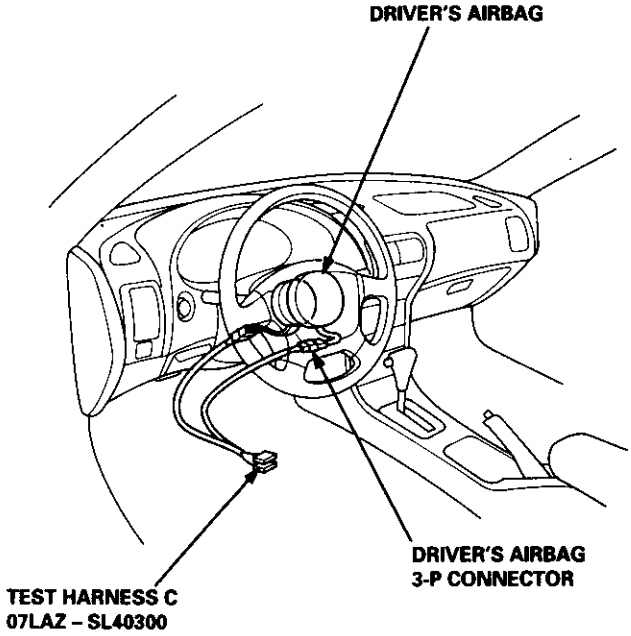

7. Measure the resistance between the No. 7 terminal and the No. 8 terminal.

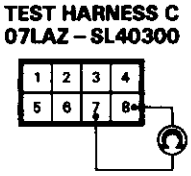

- If resistance is more than 0.2 kΩ, the driver's airbag inflator is faulty. Replace the airbag assembly and recheck the voltages according to the chart on page 23-283.
- If resistance is less than 0.2 kΩ, the cable reel is faulty. Replace it and recheck the voltages according to the chart on page 23-283.

Mode F: Open in front passenger's airbag inflator

NOTE: The original radio has a coded theft protection circuit. Be sure to get the customer's code number before disconnecting the battery cables.

1. Disconnect the battery negative cable and then the positive cable. Then connect the short connector(s) (RED) to the airbag(s) (see page 23-272).

2. Connect Test Harness B between the SRS unit and SRS main harness 18-P connector.

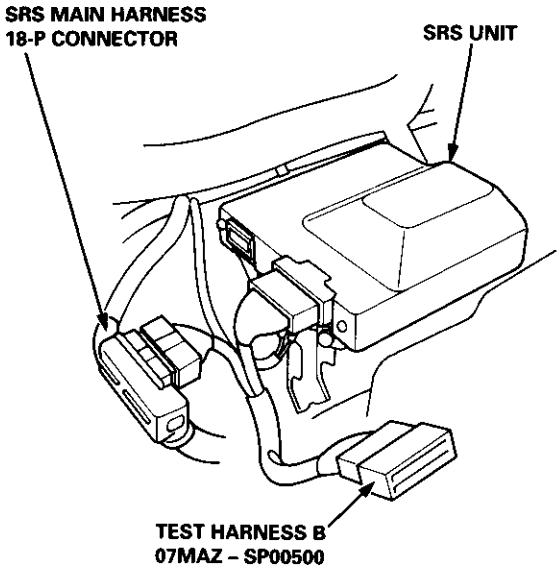

3. Reconnect the front passenger's airbag connector, then measure the resistance between the B2 terminal and the B8 terminal.

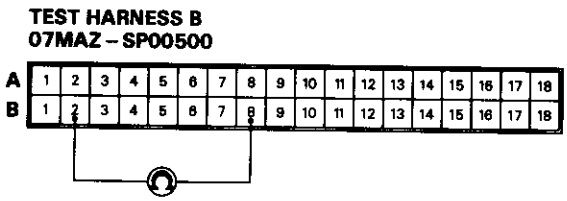

- If resistance is more than 0.2 kΩ, go to step 4.
- If resistance is less than 0.2 kΩ, the SRS unit is faulty. Substitute a known-good SRS unit and recheck the voltages according to the chart on page 23-283.

4. Disconnect the front passenger's airbag 3-P connector from the SRS main harness, then connect Test Harness C to the front passenger's airbag side of the connector.

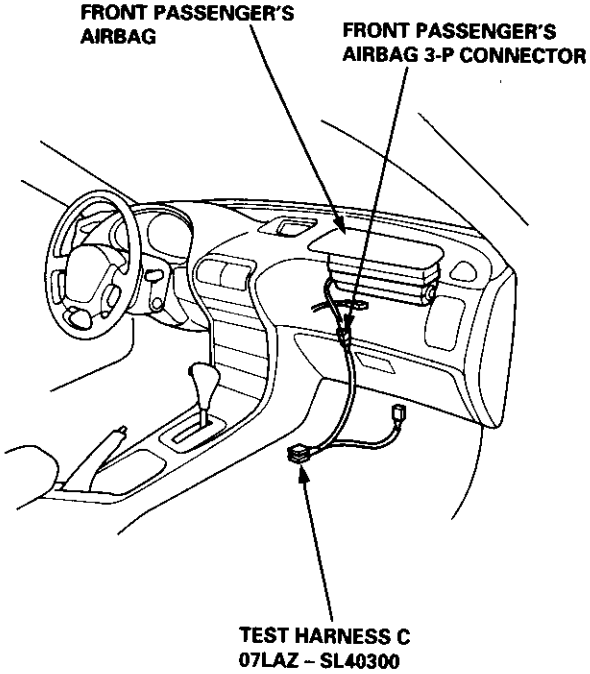

5. Measure the resistance between the No. 7 terminal and the No. 8 terminal.

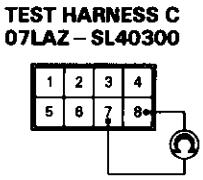

- If resistance is more than 0.2 kΩ, the front passenger's airbag inflator is faulty. Replace the front passenger's airbag assembly and recheck the voltages according to the chart on page 23-283.
- If resistance is less than 0.2 kΩ, the cable reel is faulty. Replace the cable reel and recheck the voltages according to the chart on page 23-283.

(cont'd)

Troubleshooting (cont'd)

Mode H: Blown SRS No. 25 fuse, or open in the wire

NOTE: The original radio has a coded theft protection circuit. Be sure to get the customer's code number before disconnecting the battery cables.

1. Check the SRS No. 25 (10 A) fuse in the under-dash fuse/relay box. If it's OK, go on to step 2.
   If it's blown, replace it with a new 10 A fuse, then turn the ignition switch ON (II):
   - If the fuse doesn't blow, go on to step 2.
   - If the fuse blows, troubleshoot as necessary to find the short.
2. Disconnect the battery negative cable and then the positive cable. Then connect the short connector(s) (RED) to the airbag(s) (see page 23-272).
3. Connect Test Harness B between the SRS unit and the SRS main harness 18-P connector.

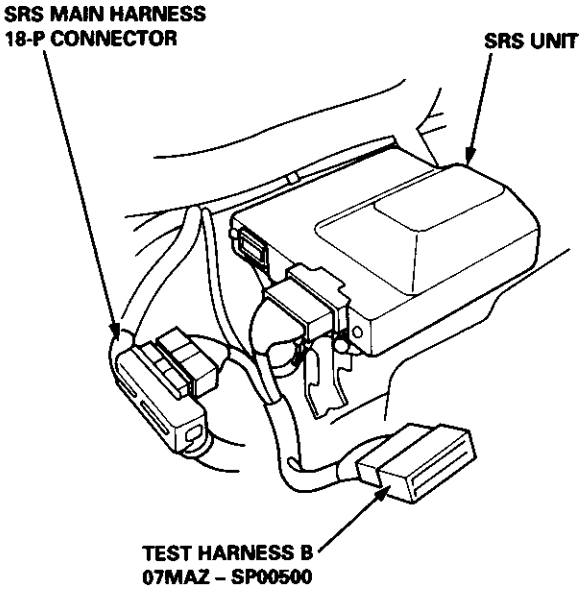

4. Reconnect the positive and negative cable to the battery.
5. Measure the voltage between the B13 terminal (+) and body ground (–) with the ignition switch ON (II).

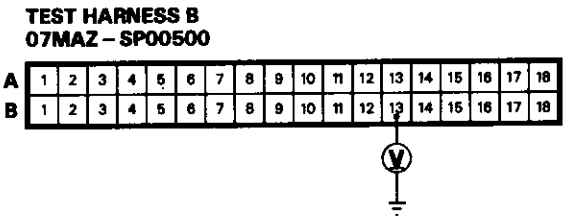

- If there is battery voltage, the SRS unit is faulty. Replace it and recheck the voltages according to the chart on page 23-283.
- If there is less than battery voltage, the SRS main harness is faulty. Replace it and recheck the voltages according to the chart on page 23-283.

Mode I: Short or open in SRS indicator wire harness

1. Disconnect the SRS main harness 4-P connector from the main wire harness.

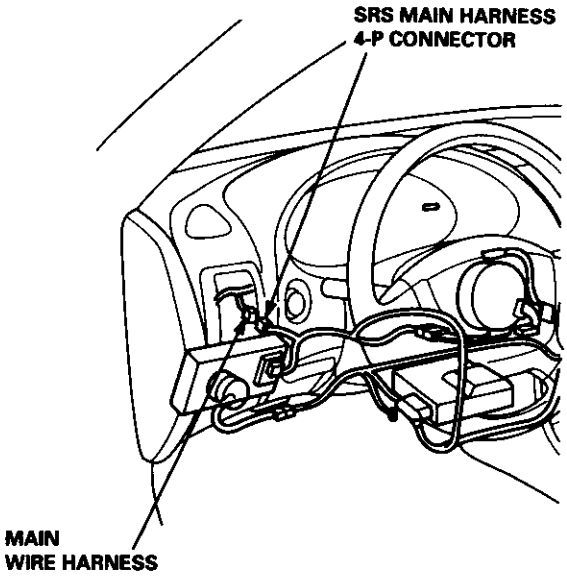

2. Turn the ignition switch ON (II) and wait for six seconds. Measure the voltage between the No. 4 terminal (+) in the SRS main harness 4-P connector and body ground.

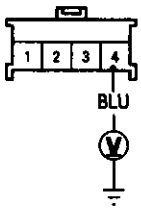

View from wire side.

- If voltage is more than 8.5 V, go to step 8.
- If voltage is less than 8.5 V, go to step 3.

NOTE: The original radio has a coded theft protection circuit. Be sure to get the customer's code number before disconnecting the battery cables.

3. Disconnect the battery negative cable and then the positive cable. Then connect the short connector(s) (RED) to the airbag(s) (see page 23-272).

4. Connect Test Harness B between the SRS unit and SRS main harness 18-P connector.

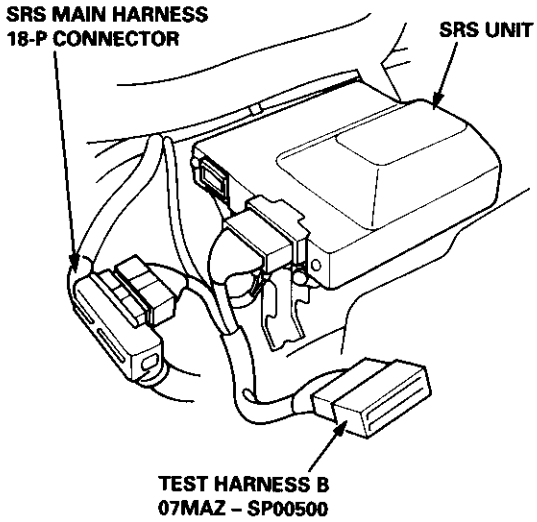

5. Reconnect the battery positive cable and negative cable.

6. Check for continuity between the B11 terminal and body ground.

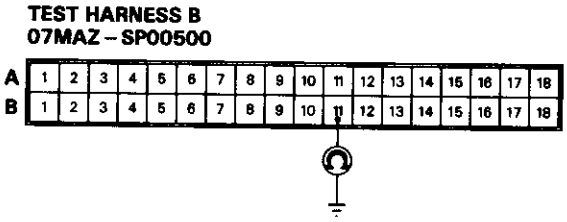

- If there is continuity, the SRS main harness is shorted. Replace the SRS main harness and recheck the voltages according to the chart on page 23-283.
- If there is no continuity, go to step 7.

(cont'd)

Troubleshooting (cont'd)

7. Check for continuity between the B11 terminal of Test Harness B and the No. 4 terminal of the SRS main harness 4-P connector.

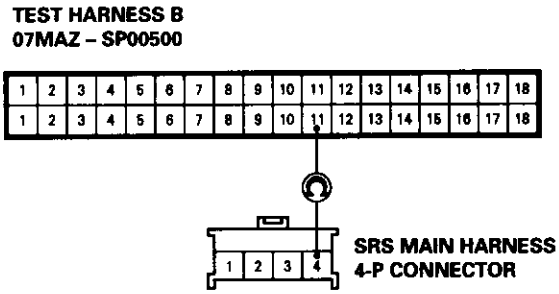

- If there is continuity, the SRS unit is faulty. Replace it and recheck the voltages according to the chart on page 23-283.
- If there is no continuity, there is an open in the SRS main harness. Replace the SRS main harness and recheck the voltages according to the chart on page 23-283.

8. Reconnect the SRS main harness 4-P connector to the main wire harness. Disconnect the dashboard wire harness 5-P connector from the gauge assembly.

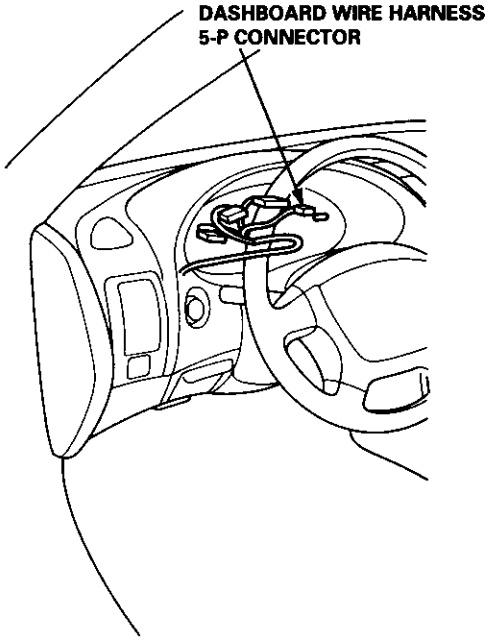

9. Turn the ignition switch ON (II) and wait for six seconds. Measure the voltage between the No. 5 terminal (+) and body ground (–).

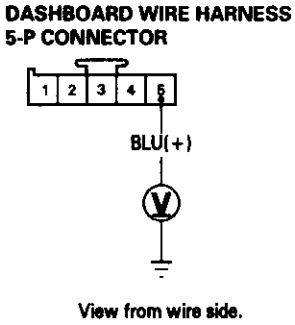

- If voltage is more than 8.5 V, the SRS indicator circuit is faulty (in the gauge assembly). Replace the SRS indicator circuit assembly and recheck the voltages according to the chart on page 23-283.
- If voltage is less than 8.5 V, the dashboard wire harness (or the main wire harness) is faulty. Replace it and recheck the voltages according to the chart on page 23-283.

Airbag Assembly Replacement

⚠ WARNING Store a removed airbag assembly with the pad surface up, if the airbag is improperly stored face down, accidental deployment could propel the unit with enough force to cause serious injury.

CAUTION:

- **Do not install used SRS parts from another car. When repairing, use only new SRS parts.**
- **Carefully inspect the airbag assembly before you install it. Do not install an airbag assembly that shows signs of being dropped or improperly handled, such as dents, cracks or deformation.**
- **Always keep the short connector(s) (RED) on the airbag(s) when the harness is disconnected.**
- **Do not disassemble or tamper with the airbag assembly.**

NOTE: The original radio has a coded theft protection circuit. Be sure to get the customer's code number before disconnecting the battery cables.

1. Disconnect the battery negative cable, then disconnect the positive cable.

2. Connect the short connector(s) (RED) to the airbag side of the connector(s):

Driver's Side:

- Remove the access panel from the steering wheel, then remove the short connector (RED) from the panel.

- Disconnect the 3-P connector between the driver's airbag and cable reel, then connect the short connector (RED) to the airbag side of the connector.

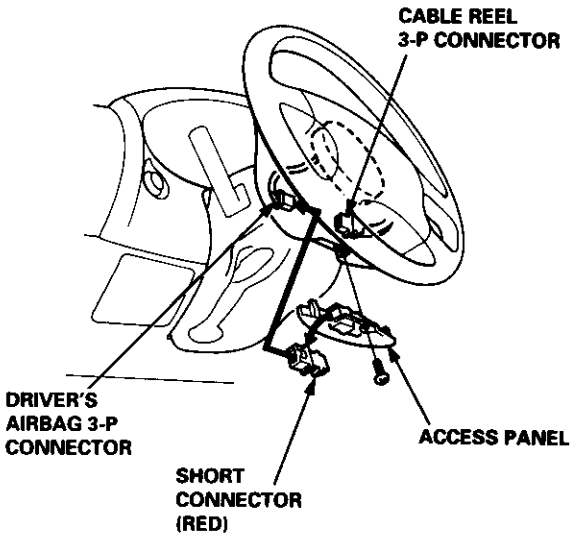

Front Passenger's Side:

- Remove the glove box damper, then remove the glove box.

- Disconnect the front passenger's airbag 3-P connector from the SRS main harness, and connect the short connector (RED) to the front passenger's airbag 3-P connector.

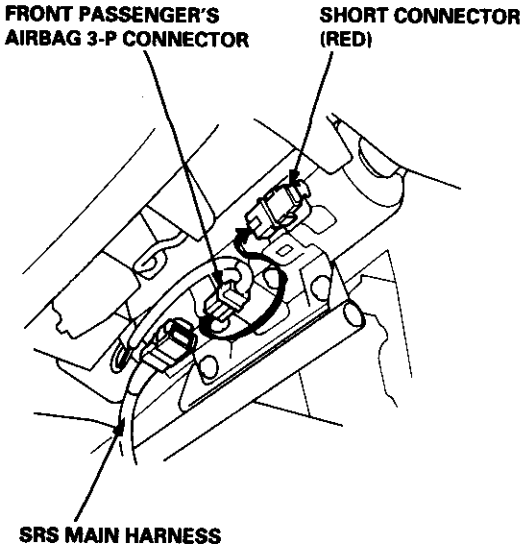

(cont'd)

Airbag Assembly Replacement (cont'd)

3. Remove the airbag(s):

Driver's Side:

- Remove the two TORX® bolts using a TORX® T30 bit, then remove the driver's airbag assembly.

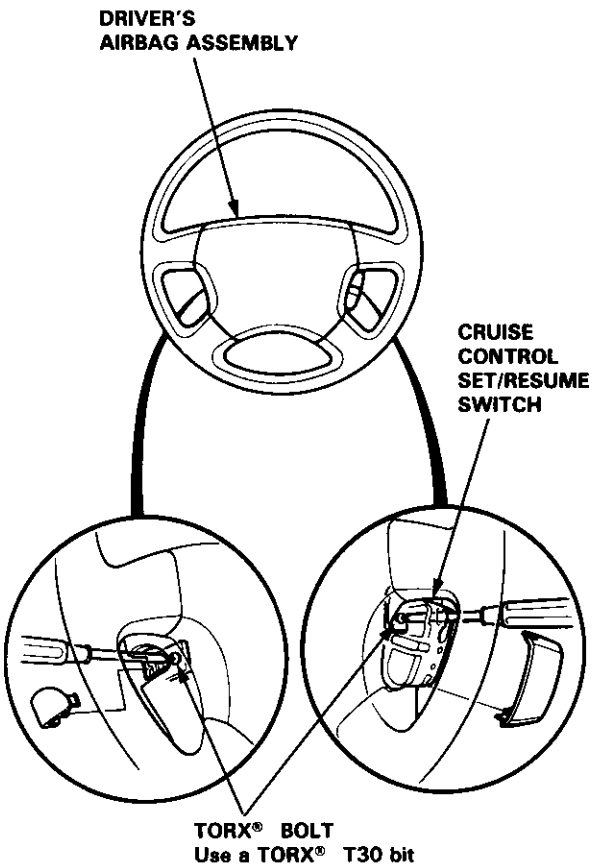

Front Passenger's Side:

- Remove the four mounting nuts, then lift the front passenger's airbag out of the dashboard.

  NOTE: Do not confuse the lower mounting nuts with the upper mounting nuts. The upper mounting nuts are not self-locking.

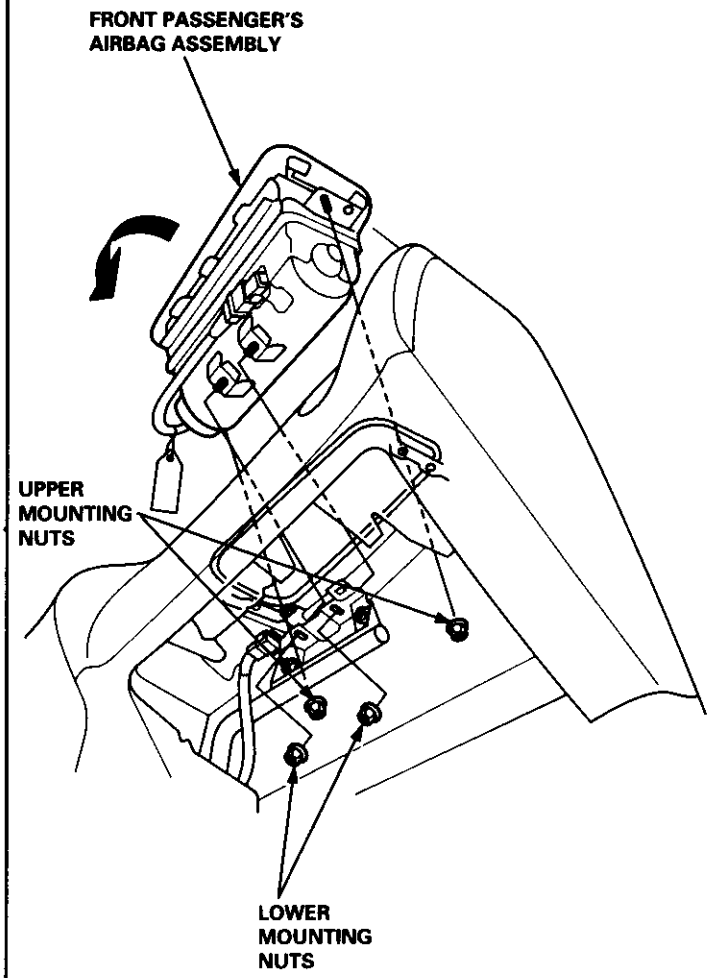

CAUTION: Be sure to install the SRS wiring so that it is not pinched or interfering with other car parts.

4. Install the new airbag(s):

   Driver's Side: Place the driver's airbag assembly in the steering wheel, and secure it with new TORX® bolts.

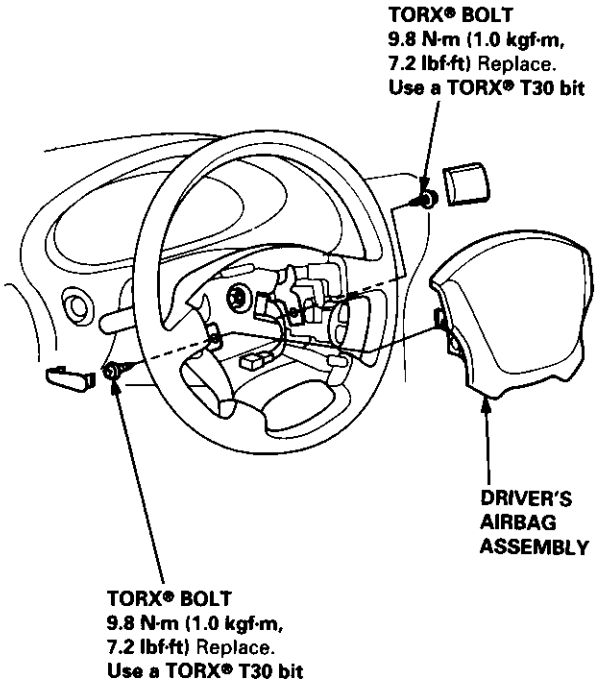

Front Passenger's Side:

- Place the front passenger's airbag assembly in the dashboard.
- Loosely install all four mounting nuts.
- Tighten the upper two nuts first, then the lower two nuts. Adjust the lower mounting bracket if necessary.

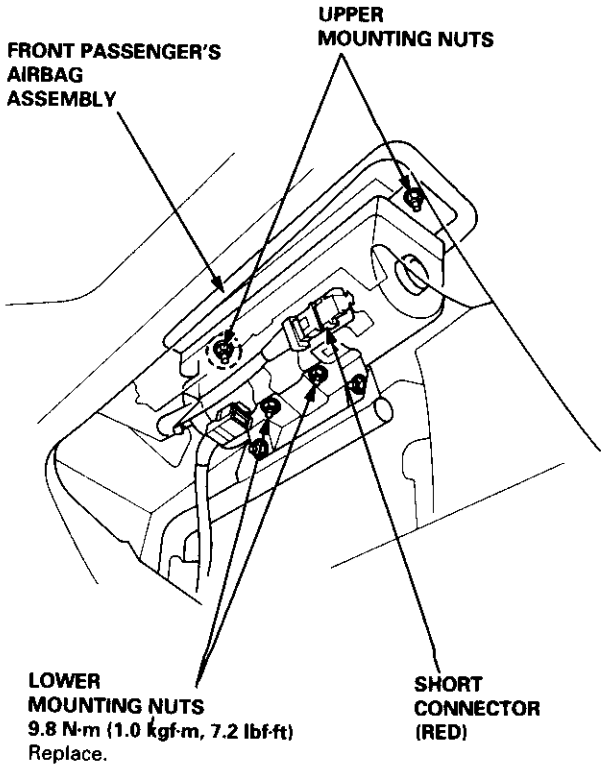

(cont'd)

Airbag Assembly Replacement (cont'd)

5. Remove and properly store the short connector(s), then reconnect the airbag connector(s).

Front Passenger's Side:

- Remove the short connector (RED) from the front passenger's airbag connector, then connect the airbag 3-P connector to the SRS main harness 3-P connector.

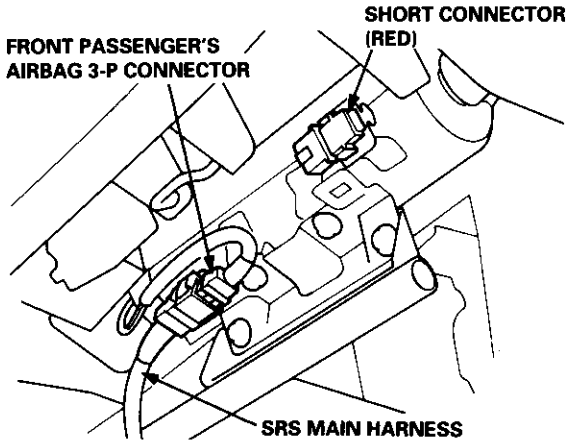

- Then reinstall the glove box on the dashboard.

Driver's Side:

- Remove the short connector (RED) from the driver's airbag connector, then connect the airbag 3-P connector to the cable reel 3-P connector.

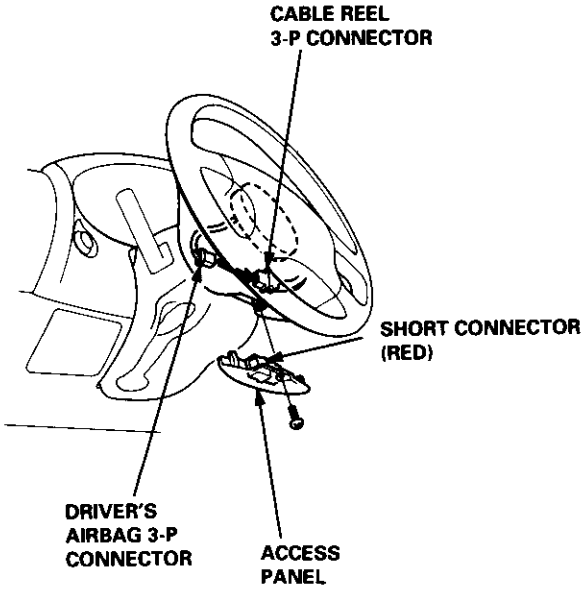

- Attach the short connector (RED) to the access panel, then reinstall the panel on the steering wheel.

6. Connect the battery positive cable, then the negative cable.

7. After installing the airbag assembly, confirm proper system operation:

   - Turn the ignition ON (II): The instrument panel SRS indicator light should come on for about six seconds and then go off.
   - Make sure both horn buttons work.
   - Take a test drive and make sure the cruise control set/resume switch works.

8. Enter the code number to restore radio operation (see page 23-191).

Airbag Assembly Disposal

Before scrapping any airbag(s) (including one in a whole car to be scrapped), the airbag must be deployed. If the car is still within the warranty period, before you deploy the airbag, the Acura District Service Manager must give approval and/or special instructions. Only after the airbag has been deployed (as the result of vehicle collision, for example),it can be scrapped.
If the airbag(s) appear(s) intact (not deployed) treat it (them) with extreme caution.
Follow this procedure:

Deploying the Airbag(s): In-car

NOTE: If an SRS car is to be entirely scrapped, its airbag(s) should be deployed while still in the car. The airbag(s) should not be considered as salvageable part(s) and should never be installed in another car.

⚠ WARNING Confirm that each airbag assembly is securely mounted; otherwise, severe personal injury could result from deployment.

1. Disconnect the battery negative cable, then disconnect the positive cable.

2. Confirm that the special tool is functioning properly by following the check procedure on the label of the tool set box, or on page 23-300.

Driver's Airbag:

3. Remove the access panel, then disconnect the 3-P connector between the driver's airbag and the cable reel.

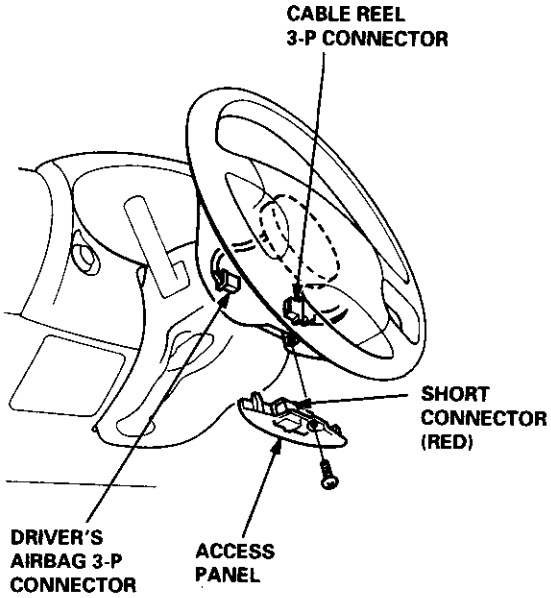

Front Passenger's Airbag:

4. Remove the glove box damper (see section 20), then remove the glove box, then disconnect the 3-P connector between the front passenger's airbag and SRS main harness.

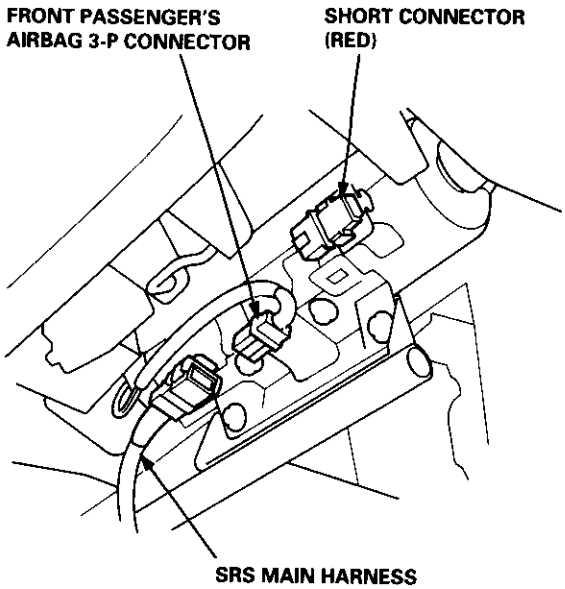

5. Cut off the airbag connector, strip the ends of the airbag wires, and connect the special tool alligator clips to the airbag. Place the special tool about thirty feet (10 meters) away from the airbag.

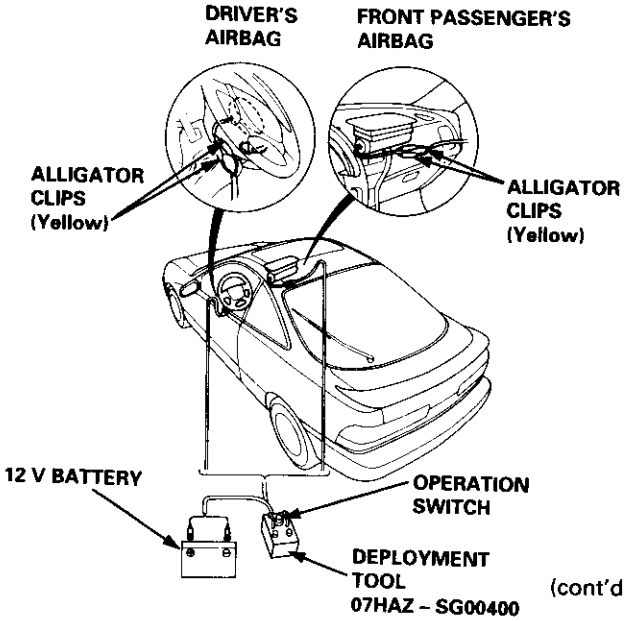

(cont'd)

Airbag Assembly Disposal (cont'd)

6. Connect a 12 volt battery to the tool:

   - If the green light on the tool comes on, the airbag igniter circuit is defective and cannot deploy the airbag. Go to Damaged Airbag Special Procedure.
   - If the red light on the tool comes on, the airbag is ready to be deployed.

7. Push the tool's deployment switch. The airbag should deploy (deployment is both highly audible and visible – a loud noise and rapid inflation of the bag, followed by slow deflation).

   - If audible/visible deployment happens and the green light on the tool comes on, continue with this procedure.
   - If the airbag doesn't deploy, yet the green light comes ON, its igniter is defective. Go to Damaged Airbag Special Procedure.

   WARNING During deployment, the airbag assembly can become hot enough to burn you. Wait thirty minutes after deployment before touching the assembly.

8. Dispose of the complete airbag assembly. No part of it can be reused. Place it in a sturdy plastic bag and seal it securely.

   CAUTION:
   - **Wear a face shield and gloves when handling a deployed airbag.**
   - **Wash your hands and rinse them well with water after handling a deployed airbag.**

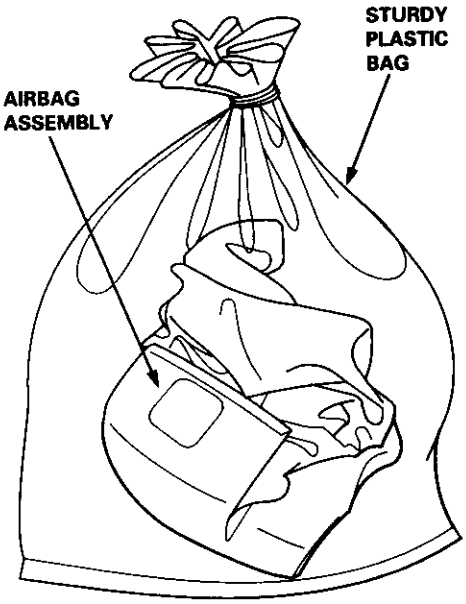

Deploying the Airbag: Out-of-car.

NOTE: If an intact airbag assembly has been removed from a scrapped car, or has been found defective or damaged during transit, storage or service, it should be deployed as follows:

WARNING Position the airbag assembly face up, outdoors on flat ground at least thirty feet from any obstacles or people.

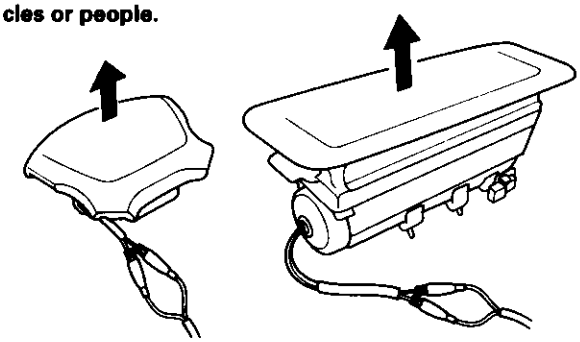

1. Confirm that the special tool is functioning properly by following the check procedure on this page or on the tool box label.
2. Remove the short connector from the airbag connector.
3. Follow steps 5, 6, 7, and 8 of the in-car deployment procedure.

Damaged Airbag Special Procedure.

WARNING If an airbag cannot be deployed, it should not be treated as normal scrap; it should still be considered a potentially explosive device that can cause serious injury.

1. If installed in a car, follow the removal procedure on page 23-295.
2. In all cases, make sure a short connector is properly installed on the airbag connector.
3. Package the airbag in exactly the same packaging that the new replacement part came in.
4. Mark the outside of the box "DAMAGED AIRBAG NOT DEPLOYED" so it does not get confused with your parts stock.
5. Contact your Acura District Service Manager for how and where to return it for disposal.

Deployment Tool: Check Procedure.

1. Connect the yellow clips to both switch protector handles on the tool; connect the tool to a battery.
2. Push the operation switch: green means the tool is OK; red means the tool is faulty.
3. Disconnect the battery and the yellow clips.

Cable Reel Replacement

WARNING Store a removed airbag assembly with the pad surface up. If the airbag is improperly stored face down, accidental deployment could propel the unit with enough force to cause serious injury.

CAUTION:

- **Carefully inspect the airbag assembly before installing it. Do not install an airbag assembly that shows signs of being dropped or improperly handled, such as dents, cracks or deformation.**
- **Always keep the short connector(s) on the airbag(s) connector when the harness is disconnected.**
- **Do not disassemble or tamper with the airbag assembly.**

NOTE: The original radio has a coded theft protection circuit. Be sure to get the customer's code number before disconnecting the battery cables.

1. Disconnect the battery negative cable and then the positive cable.

2. Make sure the wheels are aligned straight ahead.

3. Remove the dashboard lower cover and knee bolster.

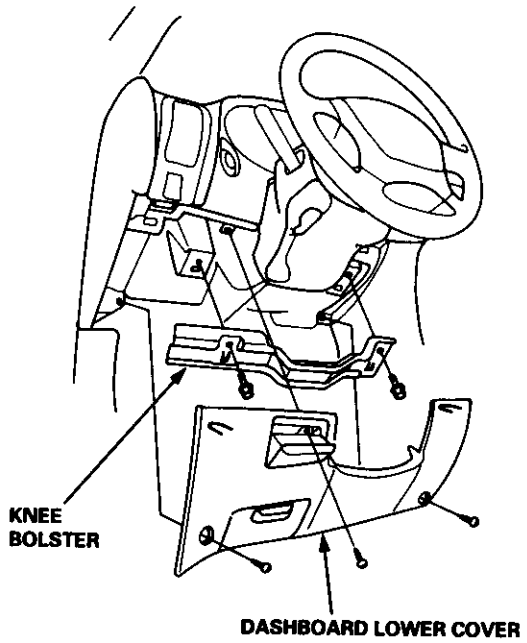

4. Remove the glove box damper (see section 20), then remove the glove box.

5. Connect the short connector(s) to the airbag(s).

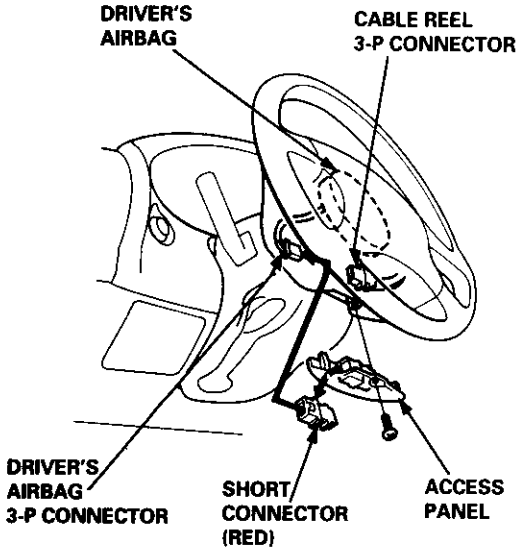

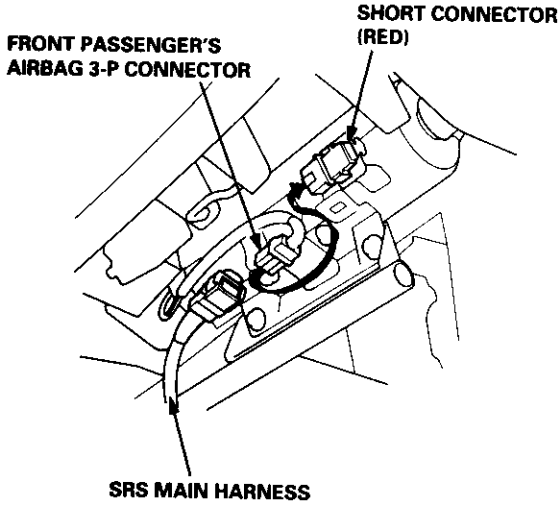

6. Remove the driver's airbag assembly from the steering wheel (two T30 TORX® bolts), then remove the steering wheel nut.

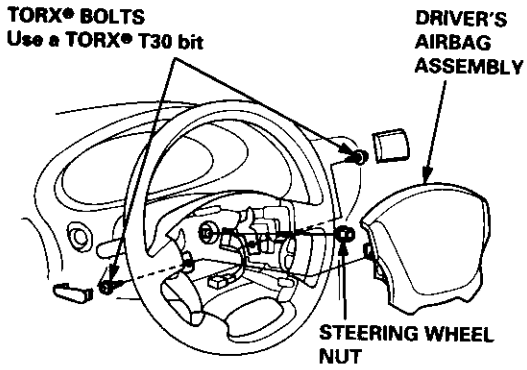

(cont'd)

Cable Reel Replacement (cont'd)

7. Disconnect the connectors from the horn and cruise control set/resume switches, then remove the cable reel 3-P connector from its clip.

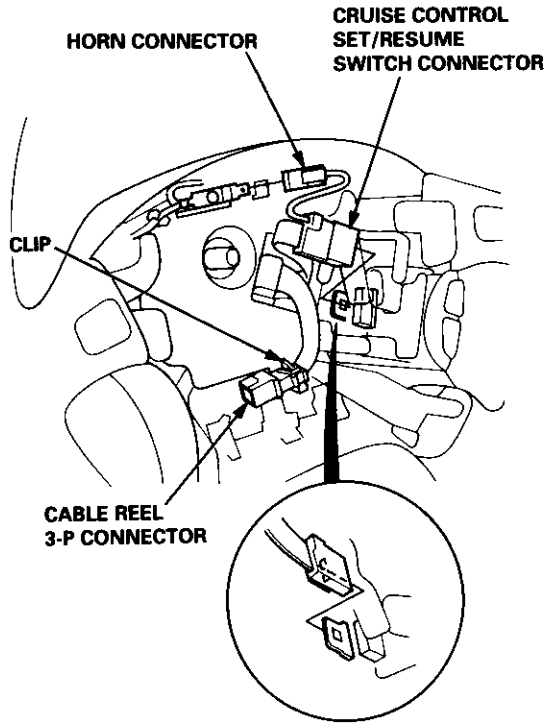

8. Remove the steering wheel from the column.

9. Remove the upper and lower column covers.

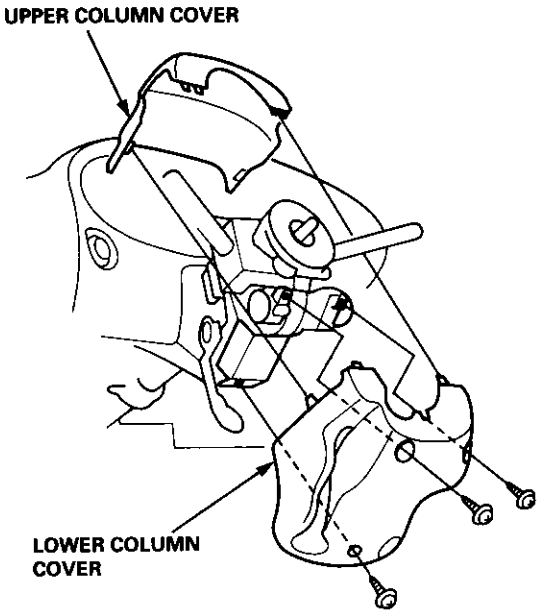

10. Disconnect the 6-P connector between the cable reel and SRS main harness, then remove the connector holder from the steering column.

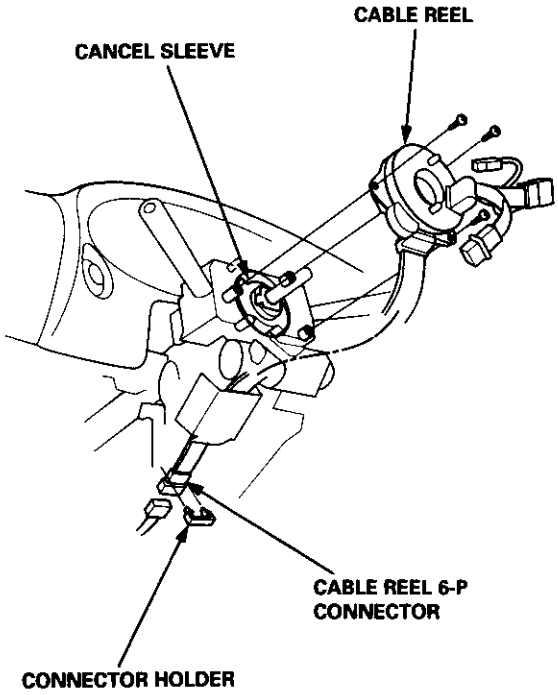

11. Remove the cable reel from the column.

CAUTION:

- **Before installing the steering wheel, the front wheels should be aligned straight ahead.**
- **Be sure to install the harness wires so that they are not pinched or interfering with other car parts.**
- **After reassembly, confirm that the wheels are still turned straight ahead and that the steering wheel spoke angle is correct (road test). If minor spoke angle adjustment is necessary, do so only by adjustment of the tie-rods, not by removing and repositioning the steering wheel.**

12. Align the cancel sleeve grooves with the cable reel projections.

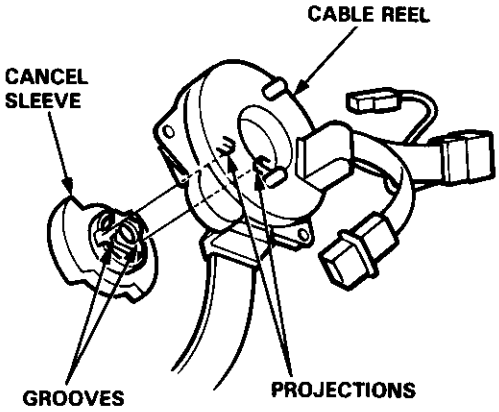

13. Carefully install the cable reel on the steering column shaft. Then attach the connector holder to the steering column.

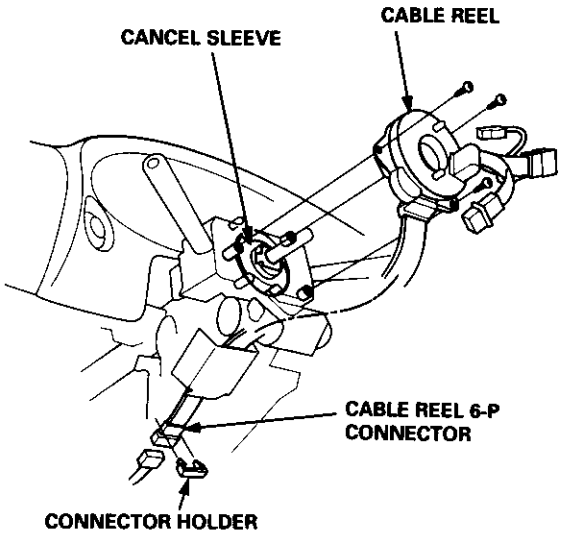

14. Install the steering column upper and lower covers.

15. Center the cable reel. Do this by first rotating the cable reel clockwise until it stops. Then rotate it counterclockwise (approximately two turns) until:

    - The yellow gear tooth lines up with the alignment mark on the cover.
    - The arrow mark on the cable reel label points straight up.

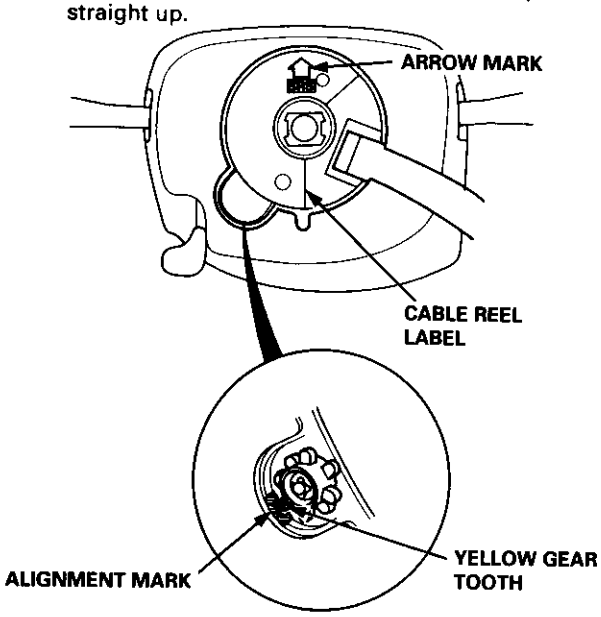

16. Install the steering wheel and attach the cable reel 3-P connector to the clip.

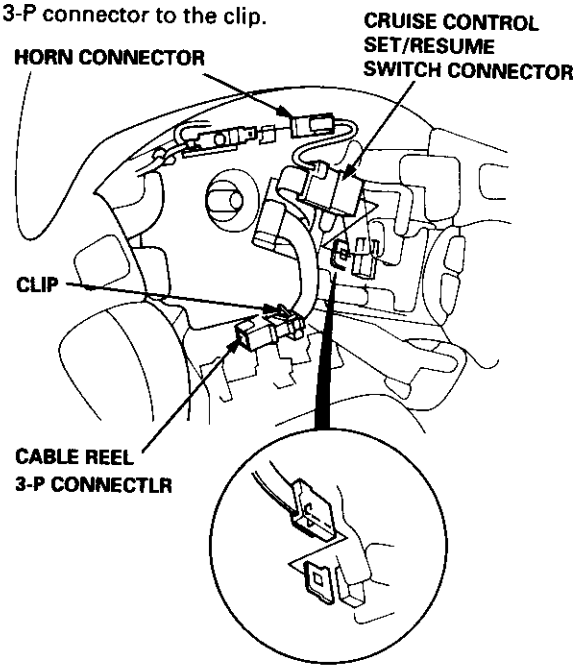

17. Connect the horn connector and cruise control set/resume switch connector.

(cont'd)

Cable Reel Replacement (cont'd)

18. Install the steering wheel nut.

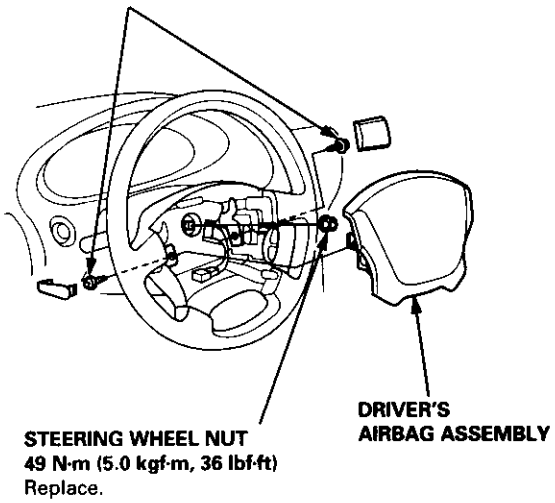

19. Install the driver's airbag assembly.

20. Connect the cable reel 6-P connector to the SRS main harness, then install the knee bolster and dashboard lower cover.

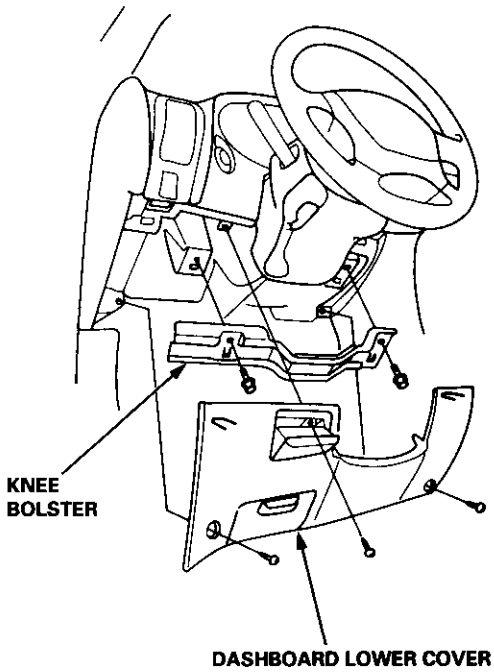

21. Remove and properly store the short connector(s) (RED), then reconnect the airbag connector(s) (and reinstall the glove box).

22. Reconnect the battery positive cable, then the negative cable.

23. After installing the cable reel, confirm proper system operation:

    - Turn the ignition ON (II); the instrument panel SRS indicator light should go on for about six seconds and then go off.
    - Make sure both horn buttons work.
    - Make sure the headlight and wiper switches work.
    - Go for a test drive and make sure the cruise control switches work.
    - Rotate the steering wheel counterclockwise to make sure the yellow gear tooth lines up with the slot on the cover.

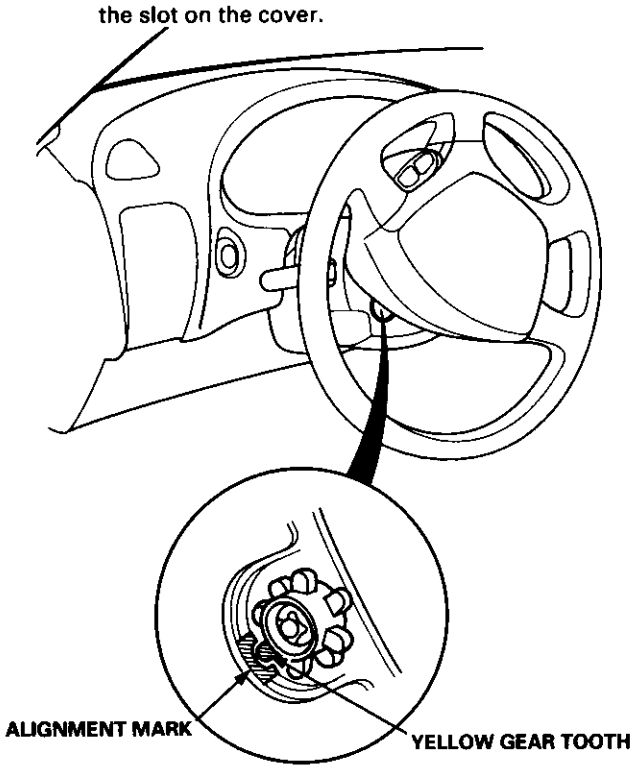

24. Enter the code number to restore radio operation (see page 23-191).

Dash Sensor Replacement

CAUTION:
- **Do not damage the sensor wiring.**
- **Do not install used SRS parts from another car, When repairing an SRS: use only new parts.**
- **Replace a sensor if it is dented, cracked, or deformed.**

NOTE: The original radio has a coded theft protection circuit. Be sure to get the customer's code number before disconnecting the battery cables.

1. Disconnect the battery negative cable and then the positive cable.

2. Remove the glove box damper (see section 20), then remove the glove box.

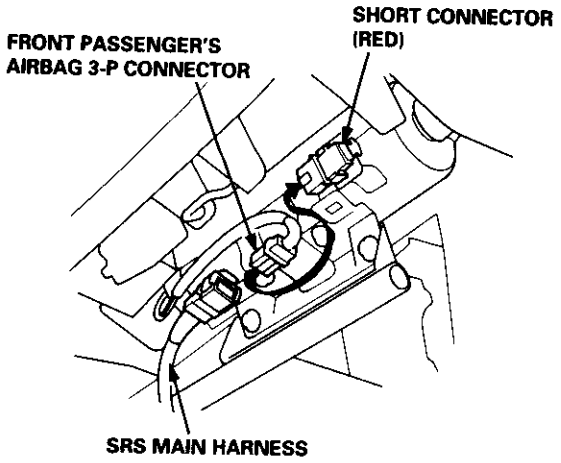

3. Connect the short connector(s) to the airbag(s).

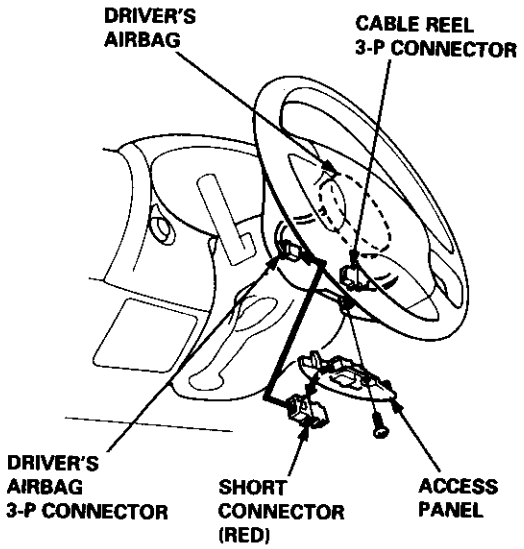

4. Remove the footrest driver's side only and door sill molding, then pull the carpet back, and remove the dash sensor protector. (Left side shown; right side is similar.)

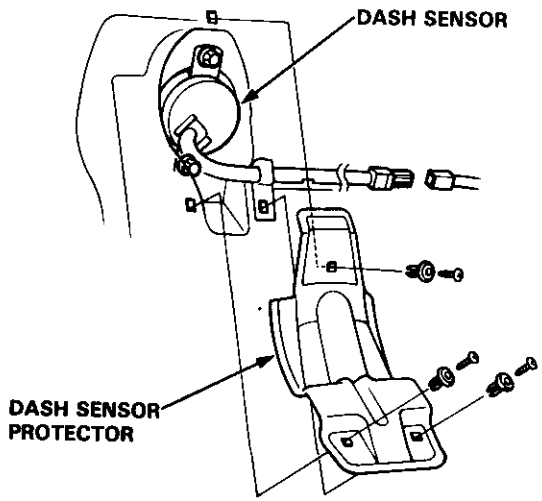

5. Remove the two mounting bolts, then remove the dash sensor.

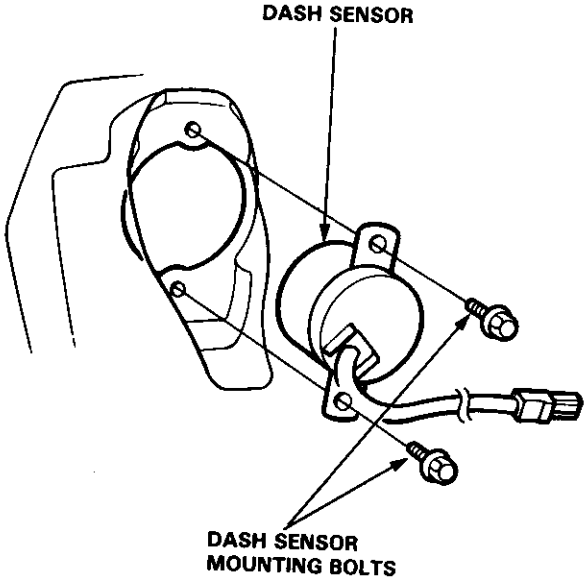

(cont'd)

Dash Sensor Replacement (cont'd)

CAUTION:

- **Be sure to install the harness wires so that they are not pinched or interfering with other car parts.**
- **Carefully inspect the dash sensors for signs of being dropped or improperly handled, such as dents, cracks or deformation.**
- **For the SRS to function properly, the right and left sensors must be installed on the proper sides.**

6. Install the sensor securely.

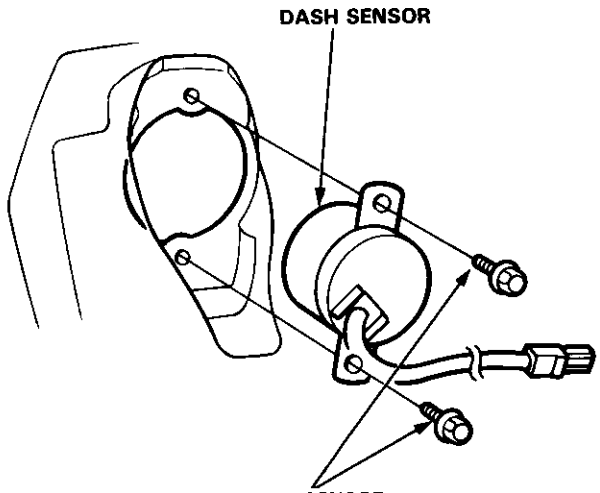

DASH SENSOR MOUNTING BOLTS
8 mm x 1.25
22 N·m (2.2 kgf·m, 16 lbf·ft)
Replace.

7. Reinstall all other removed parts.

8. Remove and properly store the short connector(s), then reconnect the airbag connector(s) (and reinstall the glove box).

9. Reconnect the battery positive cable, then the negative cable.

10. After installing the dash sensor, confirm proper system operation: Turn the ignition ON (II): the instrument panel SRS indicator light should come on for about six seconds and then go off.

11. Enter the code number to restore radio operation (see page 23-191).

SRS Unit Replacement

CAUTION:

- **Before disconnecting any part of the SRS wire harness, connect the short connector(s) (RED) to the airbag(s).**
- **Do not damage the SRS unit terminals or connectors.**
- **Do not disassemble the SRS unit; it has no serviceable parts.**
- **Store the SRS unit in a clean, dry area.**
- **Do not use any SRS unit which has been subjected to water damage or shows signs of being dropped or improperly handled, such as dents, cracks or deformation.**

NOTE: The original radio has a coded theft protection circuit. Be sure to get the customer's code number before disconnecting the battery cables.

1. Disconnect the battery negative cable, then the positive cable.

2. Connect the short connector(s) to the airbag(s) (see page 23-272).

3. Remove the right side cover from the SRS unit.

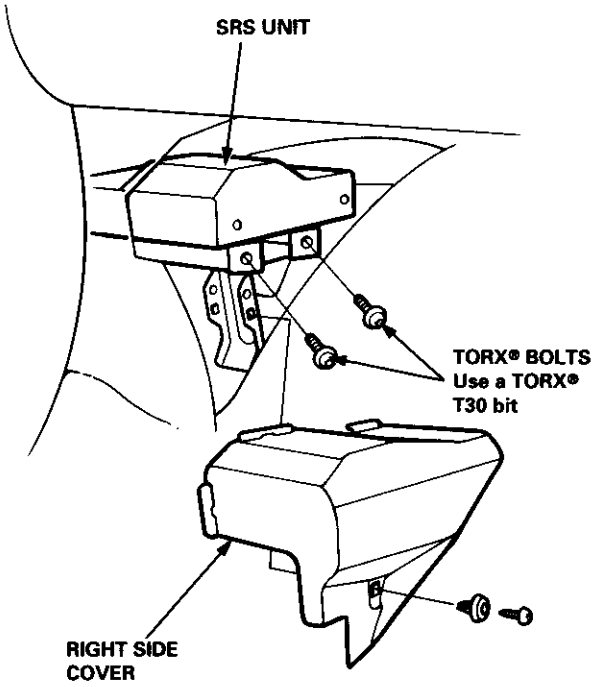

4. Remove the left side cover from the SRS unit, then disconnect the SRS main harness 18-P connector from the SRS unit.

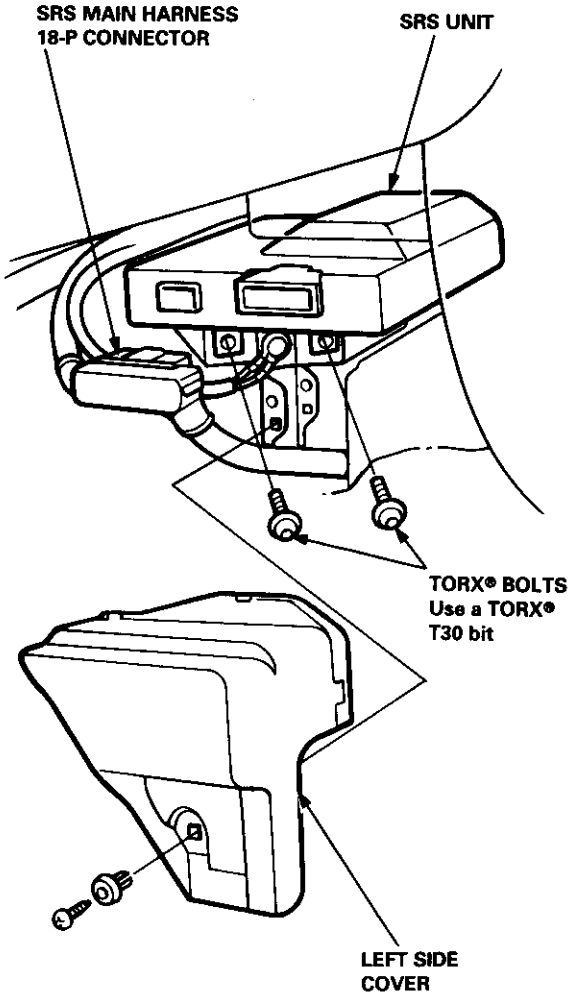

5. Remove the four TORX® bolts from the SRS unit, then pull out the SRS unit from the driver's side.

(cont'd)

SRS Unit Replacement (cont'd)

CAUTION: Be sure to install the SRS wiring so that it is not pinched or interfering with other car parts.

6. Install the new SRS unit.

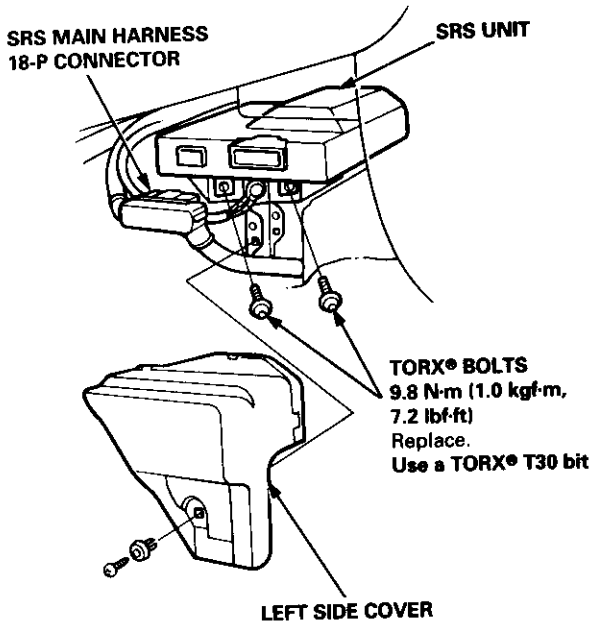

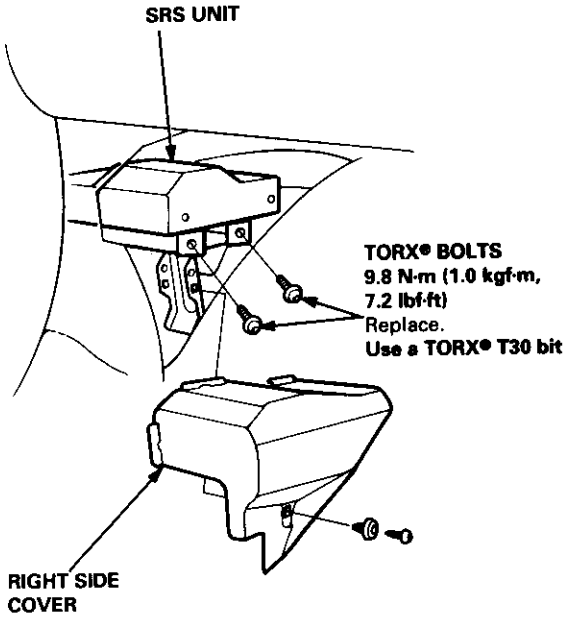

7. Connect the SRS main harness 18-P connector to the SRS unit; push it into position until it clicks.

8. Install the SRS unit covers (right and left).

   NOTE: Make sure the covers snap together in the middle.

9. Remove and properly store the short connector(s), then reconnect the airbag connector(s) (and reinstall the glove box).

10. Reconnect the battery positive cable, then the negative cable.

11. After installing the SRS unit, confirm proper system operation: Turn the ignition ON (II): the instrument panel SRS indicator light should come on for about six seconds and then go off.

12. Enter the code number to restore radio operation (see page 23-191).

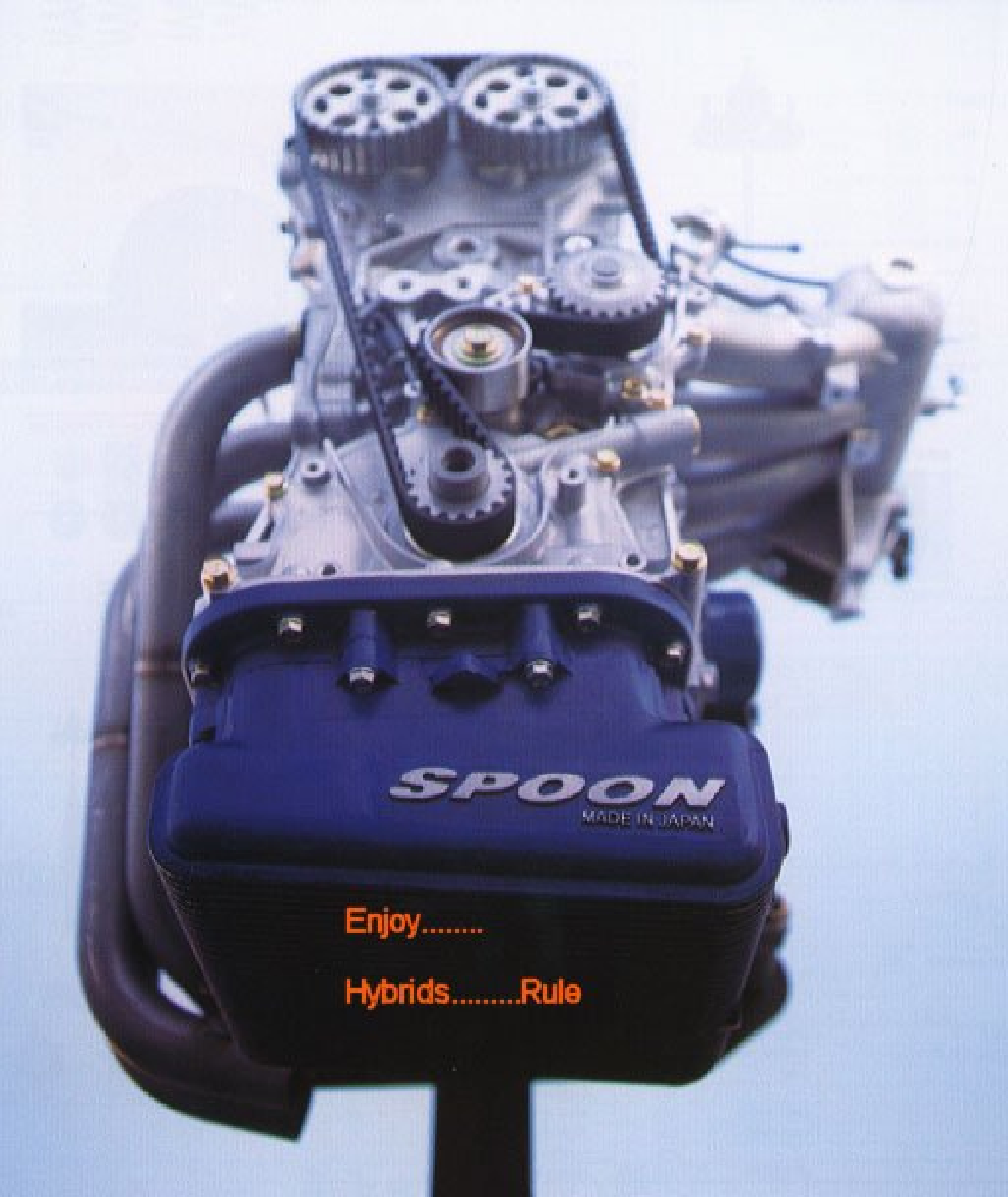
SPOON
MADE IN JAPAN
Enjoy.....
Hybrids.....Rule